11460
EICO/vrd
01 NOV 02

From: Commander, Naval Facilities Engineering Command, Engineering Innovation and Criteria Office (EICO)
To: Distribution

Subj: INTERIM TECHNICAL GUIDANCE (ITG 2003-01) – AIRCRAFT MAINTENANCE FACILITY DESIGN

Ref: (a) MIL-HDBK 1028/1C, "Aircraft Maintenance Facilities", 1 Apr 99

Encl: (1) Recommended Criteria Improvements, "Aircraft Maintenance Facilities", dtd 26 Oct 02

1. Purpose. The purpose of this guidance is to provide basic criteria and information for the design of aircraft maintenance hangars.

2. Background. Reference (a) provides criteria for aircraft maintenance facilities that is mission oriented. Type I hangars house carrier based aircraft, and Type II hangars house the larger cargo and marine patrol aircraft.

3. Discussion. The criteria program is dedicated to providing designs that reflect user functional requirements as well as flexibility in future mission requirements. Recently, NAVFAC has utilized the design/build strategy with best value source selection for hangars to capture innovative design practices and realize maximum economy. It is evident that the hangar roof framing system drives the entire hangar design more than any other feature. The cantilever roof structural and the header truss system are the two primary roof-framing systems used for the hangar maintenance bay. The cantilever roof structural design has historically proven to be more difficult to design and construct as reflected by the cost comparison between the two systems documented in enclosure (1). Reference (a) endorses the cantilever roof system to allow future hangar expansion along the flight line. Where flight line expansion is real estate constrained or base water distribution limited for fire suppression, criteria has allowed for alternate roof designs with sufficient justification and endorsement by the major claimant. However, the Navy has rarely exercised the option to add on to an existing hangar that is framed by the cantilever system.

4. Criteria. Designers shall use the following guidance for aircraft maintenance facilities:

Select Hangar roof-framing design based on an economic comparison of the cantilever system versus the header truss system unless directed otherwise by the regional engineer. Potential for flight expansion and base utility infrastructure capacity for hangar fire protection expansion shall also be considered.

DESIGN

5. Action.

a. Design. Design all new projects using the guidance noted above.

b. Planning. When appropriate, use base master plans to promote the economy of the cantilever system. Otherwise, allow either conventional hangar roof-framing system to best support the Quality of Life goals of the Navy.

c. Criteria. Include changes from enclosure (1) in next update of reference (a).

6. Coordination. This guidance has been coordinated within NAVFAC and with NAVAIR, COMLANTFLT, and COMPACFLT. Address comments and questions on the use of this guidance to the POC.

7. Point of Contact. For clarification or additional information related to this subject, please contact Mr. Vincent Donnally, P. E., DSN 262-4204, Com. (757) 322-4204, Fax (757) 322-4416 or e-mail donnallyvr@efdlant.navfac.navy.mil.

R. D. CURFMAN
By direction

Distribution:
COMNAVFACENGCOM (CHENG, Dr. Wright/BDD Mr. Robinson)
LANTNAVFACENGCOM (CI/Bolton, McDowell, Wang)
PACNAVFACENGCOM (DGM-DPM/Torngren)
SOUTHNAVFACENGCOM (CI00/Stehmeyer)
SOUTHWESTNAVFACENGCOM (03CN/Phillips)
ENGFLDACT CHESAPEAKE (CIBL)
ENGFLDACT MEDITERRANEAN (CIBL)
ENGFLDACT MIDWEST (CIBL)
ENGFLDACT NORTHEAST (CIBL)
ENGFLDACT NORTHWEST (CIBL)
ENGFLDACT WEST (CIBL)
USACOE (CECW-ETE/Joe Hartman, Pete Rossbach)
USAF CESA (ENM/Jim Caulder)
CMC (Code LFF-1/Jane Brattain)

Copy to:
COMLANTFLT (N46)
COMPACFLT (N46)
COMNAVAIR (Code 08Y1,Mr. Wolfe)

AIRCRAFT MAINTENANCE FACILITIES RECOMMENDED CRITERIA IMPROVEMENTS

PREPARED BY TRANSYSTEMS CORPORATION, NORFOLK, VA
FOR
THE NAVAL FACILITIES ENGINEERING COMMAND
ENGINEERING INNOVATION AND CRITERIA OFFICE

26 OCTOBER 2002

Please respond with comments to NAVFACENGCOM, EICO POC by 15 December 2002.

FOREWORD

This document has been developed from an evaluation of facilities in the shore establishment, from surveys of the availability of new materials and construction methods, and from selection of the best design practices of the Naval Facilities Engineering Command (NAVFACENGCOM), other Government agencies, and the private sector. This document was prepared using, to the maximum extent feasible, national professional society, association, and institute standards.

Design cannot remain static any more than the functions it serves or the technologies it uses. Accordingly, recommendations for improvement are encouraged and should be furnished to Commander, Naval Facilities Engineering Command, Criteria Office, 1510 Gilbert Street, Norfolk, VA 23511-2699; telephone (757) 322-4204, facsimile (757) 322-4416.

INTRODUCTION

Scope

This document contains criteria for the design of Navy and Marine Corps aircraft maintenance facilities, except most Naval Aviation Depots (NADEPs), to support the Naval Aviation Maintenance Program in accordance with Chief of Naval Operations (OPNAV), OPNAVINST 4790.2, The Naval Aviation Maintenance Program (NAMP).

Other Design Considerations

Aircraft maintenance officers of shore activities are to be closely consulted from project definition through the entire design effort of any project related to the construction, repair, or modernization of aircraft organizational and intermediate facilities (refer to Volume 1 of OPNAVINST 4790.2). This is to ensure that technical requirements for specific aircraft maintenance and testing procedures as outlined in Naval Air (NAVAIR) technical manuals receive proper consideration in the design of these facilities.

Facility Plates

Facility plates included in the handbook are provided to show conceptual data that shows key features of the hangar module, functional layouts, design data and similar pertinent data. Plates are furnished as a design guide to assist in planning a new facility. Plates are representative of generic type of hangar for a possible squadron layout. Variations to the plans are to be determined by the using activity, the design activity, and the designer of record during the development of the design. It should be noted that all squadrons may operate differently based on the type of aircraft maintained, the type of squadron, and other specific operational criteria. The responsibility of the design rests with the designer of record.

Planning Criteria

Naval aviation is a highly dynamic field and maintenance concepts depend increasingly on state-of-the-art computer technology. Planning factors in NAVFAC P-80, Facility Planning Criteria for Navy and Marine Corps Shore Installations, and design criteria included in the NAVFAC criteria manuals are guides that must be used with specific weapons system facilities requirement documents (FRD) to design a fully usable aviation facility. NAVAIR Facilities Management Division, Fleet Support Branch, works with the weapons systems developers to identify unique aviation facility requirements. NAVAIR engineering personnel are available during design and construction to provide specialized expertise to NAVFAC or to arrange for weapons system manufacturers' representatives to attend design reviews if requested by NAVFAC Engineering Field Divisions (EFDs) or Engineering Field Activities (EFAs) or aviation facility users.

Building Functions

Naval and Marine Corps shore aircraft maintenance complexes consist of buildings and mobile

facilities (MFs). In these complexes are facilities and shops for the repair and maintenance of aircraft and component parts. The Aircraft Intermediate Maintenance Department (AIMD) officer complex normally includes the following shops (buildings):

a) AIMD Administration,

b) Airframes Shop,

c) Engine Maintenance,

d) Avionics Shop,

e) Aviation Armament Shop (see facility plates),

f) Aviation Life Support Systems,

g) Engine Test Cells,

h) Battery Shops, and

i) Ground Support Equipment (GSE) Shop.

While the construction of MFs is not covered in this handbook, their interrelated use and connection to the buildings should be a considered part of each design.

Organizational Communications

An intercommunicating two-way voice system, with use restricted to maintenance and material management (3M), should be provided. The system will connect the AIMD officer, assistant officer, and production control office with each squadron maintenance control office in the aircraft maintenance hangar and the production control offices in the:

a) Airframes Shop,

b) Avionics Shop,

c) Engine Maintenance Shop,

d) Ground Support Equipment Shop,

e) Aviation Armaments Shop, and

f) Aviation Life Support Systems Shop.

NOTE: The AIMD will be located in the station administration building, a separate maintenance administration building, or one of the shop buildings (preferably the Avionics Shop). For maintenance hangars' organizational communications, refer to the Electrical Section

Energy Conservation

Energy conservation should be a major consideration in the design of building envelopes, mechanical systems, and electrical systems for aircraft maintenance facilities. Refer to MIL-HDBK1003/3, Heating, Ventilating, Air Conditioning, and Dehumidifying Systems. Each building envelope should be insulated to provide the minimum heat transmission ("U") factors practical to meet energy budgets.

Environmental Concerns

The maintenance facilities should meet applicable pollution abatement criteria. For applicable discharge criteria, NAVFACENGCOM Criteria Office and the cognizant EFD or EFA should be consulted. Refer to MIL-HDBK-1005/8, Domestic Wastewater Control, MIL-HDBK-1005/9, Industrial and Oily Wastewater Control

It is essential that, as part of the preliminary studies, consideration be given to water conservation and source control, including the possibility of substantial alteration of the process or plant operation to reduce pollutant loading. The greater the volume of wastewater to be treated and the greater the amount of contaminant to be removed or destroyed, the higher are the capital, labor, and material costs required. As a result, it is often economical to eliminate or reduce the quantity of waste at its source prior to treatment or in place of treatment. Several possible techniques exist including process change, material recovery, segregation, and water reuse. Sometimes, with only partial purification, spent water can be reused, once or several times, in the industrial process. Water unsuitable for direct reuse may be serviceable for a different purpose, in which quality requirements are less restrictive.

Often, there are a number of alternatives that can achieve the desired result. Therefore, a major objective of the preliminary studies should be to determine what combinations of actions will be the most cost effective and technically and operationally feasible.

AFFF Disposal. The disposal of spent AFFF is dependent upon the water treatment facilities which would treat the effluent from the discharge site. Depending upon the facility's location, AFFF may require onsite containment.

Fire Protection

Fire protection for aircraft maintenance facilities should be provided in accordance with UFC-3-600-01; National Fire Protection Association (NFPA) 409, Aircraft Hangars; and Air Force Regulation (AFR)-88-15, Criteria and Standards for Air Force Construction, as applicable to the specific building.

Anti-Terrorism / Force Protection (ATFP)

ATFP issues shall be incorporated at the initial phase of the design. Anti Terrorism and Force Protection Criteria are incorporated into this project. The basis for design should be based on the current version of the design standards which is UFC 4-010-01 "DoD Minimum Antiterrorism Standards for
Buildings. Dated 31 July 2002. The designer should coordinate all protection features with the current standards and any additional requirements in place at the time of the design. Ascertain the exact requirements for protection based on a site specific survey, or lacking one provide the minimum protection standards outlined in the standards. Coordinate all ATFP issues with the base that may be a part of another project or impact adjacent facilities such as security fencing, parking etc.

Sustainable Design

Major building components and building materials will be evaluated and selected based on the following factors:

- Resource conservation – utilizing smaller quantities and less of given materials
- Recycled content – utilizing recycled materials
- Renewability and use of sustainable management practices – use of standards and certification programs
- Local content and reduced transportation – use of locally manufactured products
- Life Cycle costs and maintenance requirements – evaluation of useful life versus first cost.
- Resource recovery and recycling – recycleability of building products

Cost for sustainable design features are incorporated into all MilCon projects. Coordinate the requirements in the appendix A that may be a part of the contract. Buildings may be required to obtain a certification developed by the U. S Green Building Council (USGBC). Information concerning the rating system is available therough the USGBC at http://www.usgbc.org. Understanding of this requirement should be addressed with the design agency and the activity.

Accessibility

In general, aircraft hangars are occupied by able-bodied military personnel only and are not required by the Uniformed Federal Accessibility Standards (UFAS) to provide for disabled people. The designer should discuss the requirement with the activity to verify that the facility is only used by able-bodied military personnel. If the facility does have civilians, the UFAS requirements will required to be incorporated into the design. The designer should consider the waiving, in whole or in part, the accessibility features of the design if requested by the activity to waive them. If the activity requests that accessibility requirements be waived, a letter requesting the waiver shall be sent to the design agency. A sample letter is attached.

The designer should consider the incorporation of accessible features into the design of the facility. Such features include:

- Accessible toilets on the ground floor for visitors
- Accessible entrances
- Other items that do not add significant expense to the project

Functional Analysis Concept Design (FACD)

The design of the hangar can be enhanced by the incorporation of a FACD into the design process of hangars. The FACD brings all of the design team (Design Agent, Activity, Owners, A/E) and other interested parties to deal with the project and allow for participation in the design process. The process generally takes place over a 10 day period and results in the conceptual design of the project being approved by all of the participants of the FACD.

Design Issues

A list of issues is attached as a part of the handbook to provide assistance to the A/E and the Activity in the design of the hangar.

Acoustics

The operations of the base should have some impact on the type of construction used. Generally, hangars constructed around a jet operations base are going to have much higher noise thresholds than a base where mostly helicopters and propeller driven aircraft are operated. The selection of the materials used in the exterior envelope may be determined due to the noise levels at the base. The selection of more heavy materials that would be helpful in reducing noise transmission into the building will impact the cost of the facility. The designer should consider performing and acoustical study to evaluate the construction requirements that will be appropriate for the base.

CIVIL DESIGN

Site

In siting the hangar, emphasis should be placed on operation, function, energy efficiency and safety during the planning stages of design. Other factors to consider include topography, vegetative cover, existing construction, weather elements, wind direction, soil conditions, flood hazards, natural and man-made obstructions, adjacent land use, availability of usable airspace, accessibility of utilities and future expansion capability. Vehicular parking, pedestrian access and traffic flow must also be given careful consideration.

Anti-Terrorism/Force Protection

Locate hangars to standoff criteria in accordance with the current version of UFC 4-010-01 "DOD Minimum Antiterrorism Standards for Buildings".

Hangar Safety Clearance

Orient hangar such that it is in compliance with all runway safety zone and imaginary surface criteria of NAVFAC P-80.3 and UFC 3-260-01.

Appearance

HVAC equipment, meters, poles, transformers, vaults, pressure reducing station piping and valving, and other utility items are to be located so that they do not detract from the building's appearance. Design should also reduce the negative visual impact of utility items and communication lines.

Restrictions

Land use restrictions dealing with runway clearances, helipad planning, aircraft noise, and use of airspace are to be applied to the site location with MIL-HDBK-1190.

Construction in Floodplains or on Wetlands

The construction of facilities in floodplains and wetlands is not recommended but is permitted provided the provisions of MIL-HDBK-1190, Executive Order 12372, DOD Directive 4165.61, Executive Order 11988, Executive Order 11990,
43 FR 6030, Title 44, CRF 59-79, Executive Order 11514, Executive Order 11991, Public Law 91-190, DOD Directive 6050.1 and Chesapeake Bay Protection Act (where applicable) are all met. Coordinate all similar requirements as directed by the authority having jurisdiction.

Energy Concerns

Consider the effect of local sun angles and wind conditions on the hangar.

Winds

In harsh climates, seacoast and areas of consistently high or changing winds, hangar entry points (hangar bay, personnel entrance and windows, intake and exhaust vents) must be designed to compensate for these adverse conditions, including snow. Consider prevailing and seasonal wind conditions.

Accessibility for the Disabled

All exterior routes to the facility shall be accessible to the disabled in accordance with the current versions of Uniform Federal Accessibility Standards (UFAS) and the Americans with Disabilities Act (ADA).See the Architectural Section for additional discussion concerning accessibility requirements.

Security Fencing

Limit the use of fencing to enclose and separate areas within the vicinity of the hangar to those conditions requiring security or the protection of life, separation of a construction site from operational facilities, isolation of a hazardous area, or as stipulated by the Base Security Department.

Landscape Planting

Make use of low maintenance landscape plants that are indigenous to the area. Existing mature trees and vegetative should be retained whenever practical. Landscape design should avoid planting next to the hangar that would permit concealment in accordance with criteria set forth in the current version of UFC 4-010-01. As hangars are generally in industrial areas, landscaping should be limited to entrances and other public areas.

Soil and Groundwater Conditions

Investigate soil and foundation conditions to assure suitability for economical excavation, site preparation, building foundations, utility lines, grading, and planting. Test the bearing capacity for the design of stable and economical facility foundations. Check groundwater elevations to assure economic methods of construction on subsurface foundations and utilities. Investigate the potential of contaminated soils and groundwater within the site to determine if remediation will be required.

Utilities

Utilities, which are essential to efficient operation and of adequate size to serve future requirements, should be considered in the early planning stages. Specifically address the adequacy of existing utilities support and include any additional needs. Planning of utility lines should minimize utility easements, capital investments, and maintenance and repair costs.

Underground Lines

Locate underground utilities to minimize the cost and effort of performing maintenance. Normally, utility lines of all types should not be located under hangars, parking lots, sidewalks, and other paved areas. All underground utility lines, mains, and conduits are to be located at the minimum depth required in accordance with local code, frost line and water table requirements, and, when possible, in common corridors to allow for ready access and maintenance. Locate utilities to allow for future expansion of the flightline.

Security

The design, location, visibility and access should be considered for protective construction measures to reduce vulnerability to action or sabotage.

Storm Drainage

Design the storm drainage system, including gutters, drains, inlets and culverts, to carry the anticipated runoff, including runoff from melting snow. Provide inlets where necessary to intercept surface flow. The building up of undeveloped areas may have a noticeable effect on installation drainage facilities; major alterations of extensions to storm sewers and drainage channels may be required because of the location and design of new facilities.

Water Service

Provide water service loop with proper valving to maximize reliability.

Sanitary Sewer

Coordinate hangar elevations with the existing sanitary sewer elevation to avoid the need for ejection pumps where feasible. Capture oily wastewater contaminants from the hangar bay trench system with oil/water separators.

AFFF Containment

Runoff from the hangar bay (OH space) trenches during activation of the AFFF system should be automatically routed to a containment system. Overflow from the containment system should be discharged to either the sanitary sewer system or the storm drain system as directed by the department overseeing environmental policy for the installation. Conditions for disposal will depend upon the capability and location of the facility that would treat the effluent from the discharge site.

Vehicular and Pedestrian Circulation.

Street System

Coordinate design of the street system with the overall traffic circulation plans for the installation as well as the adjacent road system. Provide convenient and safe vehicular access and circulation for essential services, such as deliveries, trash and garbage collection, fire protection, and maintenance and repair. Through traffic should be kept to a minimum. Design in accordance with criteria set forth in the current version of UFC 4-010-01.

Sidewalks

Sidewalks are to be designed to provide convenient and safe pedestrian access and necessary circulation. The width of walks is to be based on pedestrian traffic volume and accessible route criteria set forth in the current versions of the UFAS and the ADA. The grades of walks will normally follow the natural pitch of the ground except at locations where physically disabled access is required.

Design Temperatures. Obtain all building design temperatures from the Tri-Service Manual.

ARCHITECTURAL

Aircraft hangars are comprised of 3 distinct areas; the hangar bay (Oh space), the Shop/Maintenance Area (O1 level); and the Squadron Administration and Operations area (O2 level). The levels are designations from shipboard levels and are not specific to the hangar design.

Hangar Bay (Type 1 hangar)

The hangar bay is provided to provide "O" level maintenance to aircraft within the hangar bay. O level maintenance includes removing engines, changing tires, etc. Layout of this space is determined by the planning documents for the module configuration identified. The net area of the hangar bay is defined in the module layout and is considered a fixed area. The hangar bay may not be increased in size. Recent changes to the criteria have changed the depth of the bay from 100' clear to 85' clear. The change will allow for additional width and will still allow for all type I aircraft to be accommodated in the hangar bay. A plate showing the different types of Type I aircraft is attached.

Height of the hangar bay must be evaluated based on the requirements of the aircraft expected. A minimum height is indicated on the plates. Evaluation of the clear height should take into account the expected use. For example, some aircraft may require a crane and the hook height must be determined after evaluation of the needs of the squadron. Some aircraft may not require a crane for maintenance, or there may be other cranes available to perform maintenance when the anticipation of use is low. See the structural section for additional information and discussion concerning the types and designs of cranes.

Hangar Bay (type II hangar)

A type II hangar generally is the same as the type I hangar bay except that it is for land based or other large aircraft. The function of the type II hangar is the same as the type I hangar but the size of the module is 115' deep x 240' wide. Criteria has not evaluated, nor anticipated any changes in the size of the type II hangar bay. A plate showing the different types of Type II aircraft is attached.

O1 Shops and Maintenance Administration

These areas are generally located on the ground floor. The two functions are to provide the maintenance of the aircraft and the administration of the maintenance activity.

The shop area consists of the shops as required by the squadron. Different squadrons generally have different shops, different sized shops and arrangements. Helicopter, fighter and other fixed wing aircraft have different missions and their aircraft have different maintenance needs. Helicopters have more parts so they generally have larger requirements for tool rooms. Fighter squadrons have need for a specific shop to handle ejection seats. Some squadrons are operated with small detachments and thus have their own individual shops. Some squadrons have a "Line

Shop" while others don't. The designer should discuss the operations of the squadron prior to starting design.

The maintenance administration areas generally consist of offices that provide for the administration of the squadrons maintenance activities. See the attached floor plates for typical layouts and requirements.

O2 Squadron Administration and Operations

Generally, the squadron administration and operations are located on the second floor. Most squadrons have the same functional requirements and most spaces are typical from squadron to squadron. Squadrons performing combat type operations may require additional spaces such as "Tactics", secure briefing spaces, vaults and other related type spaces.

The organization of the squadron may determine the layout of the second level. Grouping of the operation spaces and the administration spaces should be considered. Single module hangars with 2 squadrons will be required to share some common spaces such as heads, lockers, and showers. Double module hangars may share heads, lockers, showers and training rooms to provide for more useable space for each squadron. As with the O1 level, the designer should discuss the operations of the squadron prior to starting design.

Early in the design stage, the designer should determine the security and operation requirements for the squadron. Many squadrons require a "secure office" for the incorporation of the secure internet (Siprnet).

Construction Features

The following discussion is provided to provide information that may help the designer evaluate typical construction features that may be appropriate for a typical hangar. Variations may occur due to local building conditions, climatic conditions, budget restraints or designer preferences.

Hangar

Exterior walls of the hangar bay should be of a construction suitable to the building type, be compatible with the design of the adjacent buildings, and be protected from abuse, both interior and exterior. Options for the exterior walls include:

Reinforced concrete masonry walls up to 3 meters above the floor with field fabricated metal wall panels above. Walls shall be insulated to achieve the required energy budgets.

Prefinished metal wall panels outside and batt insulation with vinyl scrim facing on the interior, concrete masonry unit wall, approximately 2.5 meters high, on the interior side. The masonry wall provides for protection of the exterior wall panels from the interior. The exterior wall finish should be protected by some form of barrier to prevent damage.

Prefinished metal wall panels outside and batt insulation with vinyl scrim facing on the interior. Exterior panels will be protected with metal liner panels, approximately 2.5 meters high, on the interior side. Provide a guardrail to protect the liner panel along walls exposed to the exterior.

Surface Treatment. The chemical properties of materials and finishes for exterior surfaces should have the highest resistance to the effects of weather and salt-corrosive atmosphere.

To prevent mirror like reflections from building surfaces to aircraft in flight, roofs and other external surfaces should have a specular reflectance compatible with the location of the building on the airfield.

If the building is so located that glare may be an operational hazard, the critical surfaces of that building should have a light reflectance of not more than 10, measured at an angle of 85 degrees in accordance with ASTM D 523, Specular Gloss.

Wall Panels

Field assembled, insulated metal wall panels will typically be the most cost effective. Other types of panels such as factory foamed panels may be provided as required to comply with the Base Exterior Architectural Plan and or be compliant with the architectural theme already established on adjacent facilties.

Roof Systems

The roof system, due to large surface area and proximity to operating aircraft, should be carefully selected. Insulation should be provided as required to meet the energy budgets established. On built-up roofs, the design should preclude carrying gravel or slag aggregate from the roof surface by high winds or drainage to any area where aircraft operate. The color of roof surfaces should be as described in this section. Provide gutter and outrigger downspouts at the front of the hangar. Provide snow guards at the front of the hangar in areas subject to heavy snowfall. Provide access from O2 level spaces to the low roof over the O1 and O2 spaces, and exterior access to the high roof over the OH space through a secured access panel or hatch, to prohibit unauthorized passage. . Built-up roofing, insulation, and moisture protection should conform to the applicable guide specifications listed in MIL-HDBK-1000/1, Engineering and Design Criteria and Documentation for Navy Facilities.

Consider the use one of the following systems:

1. Metal roof deck with rigid insulation, smooth surface built-up roof system or mineral surface modified bitumen roof system.

2. Composite metal deck and lightweights concrete engineered roof system with smooth surface built-up roof system or mineral surface modified bitumen roof system.

Composite deck supplier should be responsible for connection of lightweight material to deck.

3. Metal "acoustical" roof deck with rigid insulation and a structural standing seam metal roof system. Consider using this system over the hangar bay.

Consider using one or more of these systems as applicable.

Other types of roof systems based on cost and energy savings can be considered.

b) Select the most suitable roof systems from the following criteria:

(1) Very low slope (minimum of 6 mm per 305 mm (1/2 inch per foot)). Where roof slopes are 6 mm per 305 mm (1/2 inch per foot), decks should be stiff enough to prevent ponding, and a built-up roof should be smooth surfaced.

(2) Sloped roofs (25.4 mm per 305 mm (1 inch per foot) or greater). Roofing membrane, insulation, and moisture protection should be used only on roofs with a slope of 25.4 mm per 305 mm (1 inch per foot) or greater.

(3) Pitched roofs. Insulated metal roof panels should be used. Panels should be pre-engineered or field-fabricated and filled with blanket or rigid insulation with insulation blocks over purlins.

Hangar Doors

Hangar doors shall be one of the following types:

Horizontal Sliding Hangar Doors

Hangar doors should be a series of insulated, horizontal sliding leaves with protected, preformed (corrugated) metal or sheet-steel siding. Each sliding door leaf should be supported on hardened wheels rolling on recessed rails with guide rails at the top of the door. Hangar door rail support system should provide for surface drainage. Intermittent drainage to hangar trench drains should be at 10 feet 0 inch maximum.

Thresholds should be designed to minimize dirt accumulation or ice buildup at rails. Leaves of the door should be insulated and should be provided with waterproof weather stripping and emergency personnel exits as required by NFPA 101, Life Safety Code. The hangar doors should be hand-crank operated or electric motor operated. For electric motor operation, drives may operate leaves independently or in groups of three with drives on the end leaves and a pickup mechanism for the center leaf. The use of a cable system for the pickup mechanism should not be considered due to the extra maintenance required to keep the cable system in good operating condition. Each drive unit should have a release mechanism, and the doors should be

provided with a means of movement in the event of power failure. The normal mode of operation is an electric drive and the minimum speed of door travel should be 0.3 m/s (60 fpm).

Control of the doors should be by momentary contact type push buttons located near the leading edge of the door and limit switches on each door leaf. Safety devices should be installed to prevent injury to personnel and damage to equipment by moving door sections. If personnel access doors are provided in the hangar door leaves, an interlock should be installed that will prevent operation of the hangar door leaves when the personnel access doors are open and will halt the hangar door leaves in the event a personnel access door is opened while the hangar door leaves are in operation. An alarm should sound in conjunction with safety warning beacons when doors are in motion. Sliding steel hangar doors should be in accordance with NFGS 08342, Steel Sliding Hangar Doors.

Vertical Lift Fabric Doors

Hangar doors may be individually operated, upward acting lightweight frame system with polyvinyl fabric facings. Doors shall be designed in sections and shall have lifting mullions between door sections. Design features include electric operation, emergency generator outlet, personnel exit doors, and translucent lighting. Door speed will be a minimum of 0.13 meters/second or 60 seconds to open one panel.

In case of a power outage, the doors may be operated by utilizing APU's (Auxiliary Power Units) that are also used for providing power to the aircraft. The design incorporates a static converter that converts the 400 Hz power to 60 Hz used in the door motors. Operation sequences is identified in the Electrical Basis of Design. Additionally, a generator may be utilized to provide for the operation of the doors.

The proposed door arrangement permits egress of aircraft through adjacent panel openings in the event of operational failure. Preliminary discussions with the NAVFAC Criteria branch have indicated that a specification for Megadoor, Inc. or Albany International should be provided. Other manufacturers of similar type doors will be evaluated for use on hangar projects. For hangar openings wider than 150', a personnel exit door will be provided in the center of the bay for a fire exit as required by NFPA 409.

Personnel Doors

Personnel doors will be insulated metal doors and metal frames. Metal doors and frames are selected based on durability and common usage for this type of activity. Particular attention should be placed in the selection of the hardware for the doors. Consider the use of continuous hinges for high use doors.

Sectional Overhead Doors

Motorized sectional overhead doors may be provided from the Hangar bays to the exterior. Doors shall be pre-finished and insulated.

Overhead Rolling Service Doors

Provide rolling service doors in lieu of sectional overhead doors as needed. For exterior locations, provide insulated doors. For interior doors provide non-insulated. Provide motor operators as requested by the activity. Provide fire rated doors as required.

Natural light

Provide natural light as desired in the hangar bay. Consider the use of clerestories, and/or windows. For hangar bays utilizing light colored vertical lift fabric doors natural light will be transmitted through the fabric.

Natural light may also be provided by the use of translucent panels such as "Kalwall" and should be considered for areas with high heating degree days.

Windows, if used, may be fixed thermally broken prefinished aluminum with tinted, low –e glass. All glass shall be laminated.

Louvers

Louvers will be provided as required by the mechanical system and will be anodized aluminum with integral bird screens. Louvers will be the drainable design type.

Hangar Bay Floor Finish

The floor finish on the hangar bay shall be composed of high build epoxy coating system. The system is specified in Section 099xx "High Build Epoxy Coating Systems". The color of the floor finish should be evaluated to determine the reflectance needed or desired. The colors are generally white or light gray. The designer should discuss the selection of the system with the activity and the Public Works Department to verify the type and color desired. The designer should also verify the requirements for the applicators certifications and the incorporation of the inspections required into Section 01450 "Quality Control".

O1 LEVEL (SHOPS AND MAINTENANCE ADMINISTRATION)

Exterior wall construction

Exterior Walls will include field assembled insulated metal panels with concrete masonry back-up painted in shop and mechanical areas. Interior partitions shall be reinforced concrete masonry partitions typical. Other exterior wall materials should be considered where the Base Standards require other materials.

Wall Panels

Insulated metal wall panels – field assembled, metal furring on masonry with semi-rigid friction fit fiberglass insulation.

-

Personnel Doors

Doors will be insulated metal doors and metal frames.

Hardware will be of the type appropriate with the use. Hardware will be compliant with accessibility standards set forth in UFAS and as determined by the activity. Use of heavy duty hardware should be considered on all doors. The use of continuous hinges should be considered at exterior door openings and other high usage doors.

Windows

AMMA HC60: Windows will be fixed and operable type as determined. Windows shall be thermally broken prefinished aluminum with tinted, low –e glass. Windows will include 25 mm minimum insulated glazing to provide more favorable sound transfer coefficient. Glazing will be laminated type.

Louvers

Louvers will be provided as required by the mechanical system and will be anodized aluminum with integral bird screens. Louvers will be the drainable design type.

Miscellaneous Items

A roof access hatch will be provided.

INTERIOR MATERIALS AND SYSTEMS

Floors

Ground floor will be a concrete slab on grade. Slabs will be reinforced and installed over a vapor barrier and compacted porous fill.

Walls and Partitions

First floor walls will be 200 mm reinforced concrete masonry units. Partitions will extend to floor slab above around shops and to ceiling in other locations. Partitions around administrative areas may be gypsum wallboard on metal studs, except around shop areas. Partitions between

hangar and O1/O2 spaces will be masonry. Partitions will be insulated for acoustical control as needed. Partitions will be fire rated as required.

Stairs

Stairs will be constructed of steel with concrete filled treads. Handrails and guardrails will be steel tubing.

Doors & Frames

Doors will be metal with metal frames on the O1 level. Doors around the Paraloft, AO, AME or any other space that may contain explosives will be compliant for blast protection per the appropriate design guides. Such features may include outswinging doors and panic devices.

Hardware

Hardware will be appropriate for the spaces served. Special hardware will include:

Mechanical Cipher locks may be desired on some shops and spaces where security is required. Coordinate the requirement with the activity. Cipher locks may be considered on the following spaces:

CO office
XO office
Operations
Secure Office
Ready Room

Panic devices will be provided on the Paraloft, AO, AME as required by the current NAVOSH standards.

Keying will conform to Base standards requirements including removable cores. Generally, all squadron spaces will be keyed alike with change keys for individual doors. The building will have grand master key system.

Windows and Glazing (interior)

Windows will be single pane glass set in metal wrap around frames. Glass will be wire or tempered type as required by code based on the opening rating.

For openings in the wall between the Hangar and Maintenance Control, fire rated steel windows will be provided. Glazing will be wire glass or fire rated type.

For windows in 2 hour rated walls, a fire shutter or 2hr. firerated windows will be provided.

FINISHES

Finishes should be coordinated with the activity based on maintainability and appropriateness for the application. Long term costs should be considered when evaluating the different finishes.

Floors

- Shops, tool room, etc – Concrete with sealer or Epoxy
- Administrative spaces – Resilient tile
- Locker rooms – Ceramic tile
- Toilets – Ceramic tile
- Showers – Ceramic tile
- Corridors – Resilient tile or Epoxy
- Entry Lobby – Ceramic Tile or other durable finish.

Bases

Shops, Administrative spaces, corridors, and spaces with resilient flooring or carpet – Resilient
Spaces with Ceramic tile walls and floors – Ceramic

Walls

- All walls will be painted except ceramic tile walls.

Ceilings

- Administrative Spaces - Suspended Acoustical
- Toilets and Locker rooms – Suspended gypsum wallboard
- Corridors – Suspended acoustical panels
- Shops, equipment rooms, mechanical rooms – Exposed construction, painted.

O2 (Squadron Administration and Operations)

Exterior Wall construction

Walls will include field assembled insulated metal panels over steel studs with batt insulation or masonry per the ground floor. Exterior walls will be finished with gypsum wallboard on metal furring or applied directly to the metal studs. Other exterior wall materials should be considered where the Base Standards require other materials.

Wall Panels

Insulated metal wall panels – field assembled, metal furring on masonry with semi-rigid friction fit fiberglass insulation. Additionally, factory foamed panels will be provided in limited areas to provide visual continuity to the adjacent buildings.

Windows

AMMA HC60: Windows will be fixed and operable type, thermally broken prefinished aluminum with tinted, low –e glass. Windows will include 25 mm minimum insulated glazing to provide more favorable sound transfer coefficient. Glazing will be laminated type.

Miscellaneous Items

Ladders will be provided from rooftop of O2 area to hangar roof.

INTERIOR MATERIALS AND SYSTEMS

Walls and Partitions

Second floor partitions will be gypsum wallboard on metal studs, typical. Partitions will be insulated for acoustical control as needed.

Partitions will be fire rated as required. Partitions will extend to roof deck, typical.

Partitions around "secure offices" and SCIFs shall be in accordance with the requirements for those types of spaces.

Stairs

Stairs will be constructed of steel with concrete filled treads. Handrails and guardrails will be steel tubing.

Doors & Frames

Doors will be solid core wood with metal frames on the O2 level. Doors will be oak or birch with a natural finish. Doors for fire doors will be rated as required.

Hardware

Hardware will be appropriate for the spaces served. Special hardware will include:

> Cipher locks on some spaces where security is required Cipher locks may be provided on the following spaces as required by the activity:
>
> CO office

XO office
Operations
Secure Office
Ready Room

Keying will conform to the Base requirements including removable cores. Generally, all squadron spaces will be keyed alike with change keys for individual doors. The building will have grand master key system.

Windows and Glazing

Windows will be single pane glass set in metal wrap around frames. Glass will be wire or tempered type as required by code based on the opening rating.

For openings in the wall between the Hangar and Maintenance Control, fire rated steel windows will be provided. Glazing will be wire glass or fire rated type.

Finishes

Floors

- Administrative spaces – Resilient tile or carpet as requested by the activity.
- Locker rooms – Ceramic tile
- Toilets – Ceramic tile
- Showers – Ceramic tile
- CO, XO suite – Carpet
- Officers Ready Room– Carpet
- Corridors – Resilient tile

Bases

Administrative spaces, corridors, and spaces with resilient flooring or carpet – Resilient
Spaces with Ceramic tile walls and floors – Ceramic

Walls

All walls will be painted except for prefinished materials.

Ceilings

- Administrative Spaces, All Spaces on Second floor level – Suspended Acoustical
- Showers – Suspended gypsum wallboard
- Corridors – Suspended acoustical panels
- Equipment rooms, mechanical rooms – Exposed construction, painted.

Additional Architectural Requirements

Exterior

Restrictions on the Use of Uncoated Aluminum

Seacoast

Aluminum roofing and siding should not be specified for structures located within 10 miles (3.05 kilometers (km)) of the seacoast, due to salt deposition or incrustation from inshore winds and salt-laden atmosphere.

Exterior and Interior

The restrictions for the use of preformed (corrugated) aluminum roofing and siding are applicable also to sandwich panel and flat sheet construction of unprotected (uncoated) aluminum and to ribbed aluminum extrusions. Consideration should also be given to the corrosion of aluminum surfaces on the interior of structures due to salt deposits from salt-laden air.

Incompatible Materials

Surfaces of incompatible metals; wet, green, or damp wood; wood treated with incompatible preservatives; masonry; and concrete should be isolated from direct contact with the aluminum by a heavy coat of alkali-resistant paint or by other approved means

Coated Metal

Coated metal roofing and siding should be in accordance with Naval Facilities Guide Specification (NFGS)-07410, Metal Roof and Wall Panels.

STRUCTURAL REQUIREMENTS

The modular structure of the maintenance hangar should be a steel frame system. Use of a column free roof structure over the hangar bays allows for maximum maneuverability of aircraft within the hangar as well as flexibility for future changes in base loading. The hangar should be designed to use prefabricated components to the maximum extent practicable.

Main Structural Framing Systems

The selection of the main structural framing system must balance the often competing needs of the other design disciplines as well as the needs of the future occupants, owners and maintenance activities.

Cantilevered System

A cantilevered system supports the entire weight of the roof structure, as well as superimposed loads, from the rear wall of the hangar bay. Lateral load support is provided by the side and rear walls.

The system is advantageous in that it provides a column free building face towards the aircraft flightline. This maximizes the usable flightline frontage while decreasing the number of obstructions to aircraft movements. Additionally, the system provides the maximum flexibility for structural expansion to either side of the hangar. However, if future expansion is anticipated, other disciplines must consider such expansion in their design development.

Disadvantageously, a cantilevered system is an inefficient method for supporting loads, is prone to larger deflections than other systems and is more difficult to erect. Thermal cycles are also more likely to result in larger deflections, but will not result in thermal stresses unless the system is restrained in some unconventional manner. Additionally, the landward side of the facility must have some provision for tension anchorage of the rear of each cantilever. This anchorage may be in the form of massive dead-load or tension earth anchorages (typically tension piles). Therefore, a cantilevered system also requires a more elaborate foundation.

Design documents for a cantilever system need to carefully consider the effect of erection sequencing, actual versus predicted dead loads and environmental conditions during the fabrication and erection. Additionally, the designer must consider the possibility of load reversal on the main supporting elements as a result of high uplift forces.

Header Truss System

A header truss system spans entire flightline face of the building and either rests upon towers at each flightline corner of the building or is continuous to the foundation. The remaining walls of the hangar are conventionally framed. Lateral support is provided through the walls and the truss

supporting towers. Intermediate support to the truss is provided in the plane of the roof through a diaphragm, dedicated horizontal truss bracing or a combination of the two.

The header truss is an efficient system to span intermediate lengths and provides a relatively simple erection system.

The structural efficiency and stiffness decrease exponentially as the span of the truss increases. This can be offset by increasing the depth of the truss but the practical limits of transporting the fabricated hardware, erecting the assembled truss and lateral bracing of the system and its individual components limit the truss depth to something on the order of 7.5 meters. A header truss virtually precludes the use of expansion joints, therefore the hangar door span may be limited by the thermal response of non-structural components. However, a three hinged arch system allows an expansion joint along the centerline of the hangar bay and extends the practical thermal expansion limit. The header truss system also requires that flightline frontage be dedicated to structural supports. Finally, the potential expansion of the hangar is constrained by the presence of towers and lateral load resisting systems.

Construction documents for a header truss system must clearly indicate the camber requirements as well as supply the necessary information for the fabricator and erector to predict the truss's response at various states of construction, handling and loading.

The header truss may be designed as fixed, pinned or partially restrained at its supports in order to balance the strength and deflection characteristics of the header truss with the complexity of detailing and erection. The designer of a statically indeterminate truss must carefully consider the influence that temperature and erection rigging will have on the difficulty of completing connections as well as final camber as this complexity must be communicated on the design documents.

Conventional Framing Systems

Conventional framing systems are represented by relatively short spans where a single hot rolled shape, pre-engineered frame element or built-up plate girder can span the entire flightline opening. Such a system requires the relatively frequent placement of columns along the flightline face of the hangar.

A conventional framing system is the most efficient structural design approach, is easily expanded by repetition of the selected elements and simplifies the structural erection but significantly reduces the operational flexibility.

Repetitive Truss System

Repetitive truss system is composed of a series of trusses, spanning the width of the hangar at regular intervals. Secondary members span from truss to truss to enclose the building envelope. A repetitive truss system is essentially a series of header truss and the issues faced by the designer are similar.

Advantageously, the repetitive truss system allows large hangar bay doors on both ends of the hangar bay, adding flexibility to positioning of aircraft and avoids concentrating large loads on few critical elements. The system also has built in redundancy which can be a beneficial factor in seismic and anti-terrorism/force protection design. Disadvantageously, the lateral load resisting system in the direction parallel to the doors is complicated by the lack of walls in that direction.

Hybrid Systems

The possibility exists to combine structural systems in multiple ways. The designer is cautioned to carefully consider the ramifications of combining systems as the negative influences of a hybrid is often greater any one system independently.

Materials

Weathering steel

Weathering steel, if considered, should not be used where exposed to recurrent wetting by salt water or airborne abrasives. Weathering steel should not be used at or below grade. Careful detailing should be maintained throughout the design to ensure that weathering steel does not trap and hold water. Pockets which hold water will not form the required oxide coating which gives the steel its enhanced corrosion protection. In areas where weathering steel is acceptable, proper detailing and use of materials should be a requirement to prevent staining of adjacent building components.

Hollow Structural Sections

Hollow Structural Sections (HSS)are an attractive design choice for their weak axis stability or bi-axial properties. There may also be additional benefits derived from efficiency in steel use and minimization of exposed steel surfaces. The bi-axial strength characteristics provide for enhanced erectibility and greater resistance to progressive collapse resulting from localized damage. However, HSS connections are more challenging to design and often more difficult to fabricate. The design engineer should consider and clearly represent in the contract drawings the difficulty of the HSS connections. Additionally, a greater reliance on shop connections is the norm in HSS practice. The designer is encouraged to consider the complications of transporting large, built-up elements to the site. HSS connections may involve the use of welds which are not pre-approved and/or more extensive weld testing than normally found on hot rolled steel construction.

Architecturally Exposed Structural Steel

Architecturally Exposed Structural Steel (AESS) may be an attractive choice for architectural reasons, such as maximizing the useable floor space or minimizing facia and cladding. Exposed

steel may also allow the structural designer to optimize the structural frame by avoiding various architectural constraints.

Should an exposed steel system be selected, the designers are directed to review the AISC "Code of Standard Practice for Steel Buildings and Bridges" section 10, Architecturally Exposed Structural Steel. It is important to note the contract documents must specifically identify the steel which is part of an AESS system in order to ensure that the relevant AISC provisions are a binding part of an construction contract.

The proper selection of finish and coating systems for exposed steel are extremely important to control the long term costs associated with maintenance of the facility. High quality exterior paint systems are typically a system of multiple layers of primers and top coats applied in phases in the shop and in the field. Newer urethane based systems are available on the market with reduced coatings and much simpler application requirements but, at this time, the Navy has limited experience
with their long term performance.

The designer is advised to review the Unified Facilities Guide Specifications, section 09971 "EXTERIOR COATING OF STEEL STRUCTURES." This specification is not directly applicable to the AESS found in hangar facilities and should be edited appropriately. Primarily, maximum advantage should be taken of the opportunity to shop paint completed fabrications. Secondly, a properly trained coatings inspector should be retained to oversee both shop and field painting activities.

Strength and Serviceability Requirements

Design the overall structural system for wind uplift conditions peculiar to the site. Provide a bridge crane in the OH space of each maintenance hangar module supporting helicopters, propeller driven aircraft, or the C-9, V-22, or AV-8 aircraft. In the future, H-53 will normally be housed in a type II hangar. If NAVAIR headquarters makes special exception for housing an H-53 in a special modified type I hangar, the minimum hook clearance must be 8.2 meters (27 feet). Do not use bridge cranes in maintenance hangars supporting other types of aircraft except in specialized instances approved by NAVFACENGCOM or when specifically required by the FRD. Requirements for the bridge crane, motor, and controls are given in par. 2.9. In all cases, the hangar roof support structure should be designed to accommodate the loading from overhead bridge crane described in par. 2.9.1.

Gravity Loads

Gravity loads on the main structural frame should be determined from American Society of Civil Engineers (ASCE) 7, Minimum Design Loads for Buildings and Other Structures, supplemented by actual physical data of known equipment and materials where appropriate. In determining design load combinations for structures in which the dead load of one portion of the building serves as stability enhancing function for another portion of the building (i.e. cantilevered construction), the following cases should be considered in addition to the basic load cases

(1) Factored Load Combinations

Any load case in which dead load is factored with a coefficient exceeding unity, that portion of the dead load serving to resist overturning should be factored with a 0.9 coefficient.

(2) Service Load Combinations

Any load case in which dead load is factored with a coefficient exceeding unity, that portion of the dead load serving to resist overturning should be factored with a 0.6 coefficient.

Wind Loads

Refer to American Society of Civil Engineers (ASCE) 7, Minimum Design Loads for Buildings and Other Structures to quantify and distribute wind loads to the building.

Wind load on main building wind force resisting system should be determined on the following two conditions:

(1) Hangar doors fully open for winds up to 96.6 kph (60 mph).
(2) Hangar doors closed for winds above 96.6 kph (60 mph) up to the maximum wind velocity for the geographic area.

Hangars are prone to large eccentricities between centers of wind pressure and centers of rigidity (especially cantilevered hangars). Even unfactored loads resulting from this eccentricity may be significant. The designer is cautioned to consider this eccentricity and to locate the center of rigidity as near to the center of applied force as practical by careful arrangement of the lateral load resisting elements.

Seismic loads

The designer should consult the references listed (1 below) for seismic design loads. Additionally, seismic design criteria may impose significant constraints upon the structural frame, not only in the loads applied but also in the fundamental choice of framing system (2 below). For instance, an STMF system is limited to a span of 20 meters (65 feet). A combination of site condition, design approach and structural layout will determine the AISC criteria.

A poor selection of framing, arrangement of bracing or large asymmetries may result in expensive connection fabrication and testing requirements or outright prohibition of the fundamental design. The facility designers are cautioned to investigate the seismic issues early in the design phase and plan the building's geometry and structure accordingly.

Hangars are prone to large eccentricities between centers of mass and centers of rigidity (especially cantilevered hangars). Regardless of the structural system, the unfactored loads from this eccentricity may be significant.

(1) References:
TI 809-04 Seismic Design for Buildings 31 December 1998
FEMA 368 NEHRP Recommended Provisions for Seismic Regulations for New Buildings and Other Structures, Part 1 – Provisions 2000 Edition
FEMA 369 NEHRP Recommended Provisions for Seismic Regulations for New Buildings and Other Structures, Part 2 – Commentary 2000 Edition
AISC Pub S341 Seismic Provisions for Structural Steel Buildings Amended 10 November 2000

(2) Structural framing systems for hangars typically fall into one the following force-resisting-systems (references below apply to AISC Pub S341):
(EBF) Eccentrically Braced Frames (Part 1, Sec 15)
(SCBF) Special Concentrically Braced Frames (Part 1, Sec 13)
(OCBF) Ordinary Concentrically Braced Frames (Part 1, Sec 14)
(SMF) Special Moment Frame (Part 1, Sec 9)
(STMF) Special Truss Moment Frame (Part 1, Sec 12)
(IMF) Intermediate Moment Frame (Part 1, Sec 10)
(OMF) Ordinary Truss Moment Frame (Part 1, Sec 11)

Anti-Terrorism and Force Protection (ATFP)

The designer should consult *Department of Defense Minimum Antiterrorism Standards for Buildings, dated July 31, 2002* for the design loads as well as other analysis and detailing requirements.

Design and Construction Documentation

Full disclosure of the design loads and assumptions is imperative. This should include all loading conditions at all phases of the structure's life, from skeleton erection through installation of finishes and accessories (i.e., "dead load"). Loading conditions should also include absolute and differential temperature effects in the stress and deflection information. Drawing information should also include any anticipated shoring (methods and points).

The required camber should be clearly shown as well as the assumptions which lead to the camber values. If unknown factors (such as the final true weight of material & equipment, erection rigging, erection sequencing or environmental factors) were assumed during design, the contract drawings should clearly indicate those assumptions and that deviations from the assumed values may result in changes to the required camber.

Large, shop-built elements, are typically fabricated in their entirety and then broken down for shipping to the site. It is common practice for the fabricator to verify his camber at this stage of fabrication. As such, the design documents should include the predicted camber remaining after the elements self-weight deflection is added. The support assumptions for this prediction should be clearly indicated.

Thermal Loads

The designer must account for anticipated differential thermal effects from solar heating (e.g., on long sun-exposed exterior steel compared to shaded steel such as roof trusses, joists or decking) or inside/outside differences (particularly an "attic" effect in the hangar bay). The designer should consider local climate conditions when selecting the final differential temperature range, as a minimum, a temperature differential of □28C (□50F) should be used for design. Particular attention should be paid to the deflections caused by thermal effects. Some architectural facia elements and weather seals around hangar doors are particularly vulnerable to detrimental deflections. These thermal effects are a serviceability concern and as such should be investigated using unfactored loads.

Additional Cantilever Requirements

The cantilever truss roof design should incorporate a deflection primary and secondary adjustment method. The design drawings and specifications should require the Contractor to "level" the truss tips (above the hangar door) after all roof and supported materials have been installed into their final positions. It is suggested that the primary adjustment system be installed in the forestay (and the backstay if necessary), but other systems are permissible. To level the truss tips, the Contractor should be required to survey the roof truss system to ensure the structural system is performing as the designer intended. The Contractor's survey should be done during stable atmospheric conditions (night, early morning, or a cloudy calm day). The designer of record should review and approve the survey information prior to installing the hangar doors. Primary adjustments of more than 25 mm (1 inch) vertical movement, if required to level the truss, should be approved by the designer of record. Secondary or cosmetic adjustments up to 25 mm (1 inch) of correction can be accomplished by shimming or milling structural members below the truss tip under the supervision of the Contracting Officer.

Additional Main Framing Design Requirements

Main hangar structural systems should include a system for adjusting the truss connection should temperature extremes be encountered at the time of erection. A statement as to the allowable temperature range within which the erection may proceed without adjustment should be stated in the construction documents. Typically, the unadjusted temperature range should be 20C ± 11C (68°F ± 20°F), however the designer must verify the allowable temperature range on a case by case basis.

Hangar Doors

Hangar door guide systems are normally sized to allow total roof truss live load deflection not to exceed 200 mm (8 inches). The designer of record should be responsible for coordinating the total anticipated roof deflection with several potential door guide manufacturers to ensure that an economical system may be selected.

Static Determinacy

Designers are cautioned that the basic structural elements of a truss system should be "statically determinate" during the adjustment phase (to avoid introduction of large and often unpredictable stresses into a constrained system) unless a careful investigation has been made into the resulting load condition.

Miscellaneous Considerations

Provide a means to "lock in" the final adjusted configuration once the system has been leveled. If high strength bolts are used, ensure that they are fully tensioned. The use of load indicating washers in final bolted assemblies of the principle load carrying members is encouraged. The use of load indicating washers allows for more meaningful inspection of the primary connections at a later time. In all cases, bolted assemblies that require fasteners to be loosened in order to adjust the structure should have their bolts discarded and replaced before the construction is complete.

l) Failure Mechanism: Single points of failure are undesirable in any facility but are historically not uncommon in long span steel structures. The designer should pay particular attention to the connections between major structural elements (truss supports, cantilever anchors, etc). The designs should include secondary or backup load paths should the primary system be damaged.

Construction and Erection

Hangar construction involves the creation of a long span, column free space. These requirements complicate the erection of the building and make the steel erection contractor a much more important partner in the process than is typical of most government construction. While the structural engineer is typically advised to avoid interfering with the means and methods of the construction professionals, he should have an understanding of the consequences which accompany any chosen erection method. Two general approaches are applicable to the erection of large hangar bays, ground assembly with heavy lift and aerial assembly with shoring towers.

Ground Assembly with Heavy Lift

While not unique to hangars, lifts of pre-positioned, pre-assembled hardware weighing 30 to 50 tons are uncommon in most construction and typical of hangar construction. Ground construction is typical the most common means selected by contractors. Large cribbing is set immediately adjacent to the lift location and leveled. Shims are set to adjust for elevation differences and to establish the proper camber. The structural element is then constructed on top of the cribbing. Once completed, the entire element is lifted into place and the final support connections made. Fabricating on the ground allows for enhanced safety for the bulk of the work as well greater control of quality and ease of access for inspectors. The drawbacks of the approach include the cost associated with mobilizing a crane or cranes which can lift the assembly. Tight quality control is essential to ensure that the final fit is made.

Some issues for the designer to be aware of include:
The rigging and lift may impose loads on a structural assembly which were not anticipated by the designer. Even if the assembly is not damaged by the lift, it may undergo unexpected deformations which may then be locked into the final structure once the last connections are made. The heavy lift may place the large, overhead elements into place prior to the remainder of the facility's framing being completed. This is often a physical requirement given the necessity of getting equipment adjacent to the lift operations. The designer should give some consideration early in the design as to the lateral stability of the building components which support the major roof elements.

Aerial Assembly with Shoring Towers

This approach is becoming increasingly uncommon with the general availability of large cranes and the increased emphasis on avoiding fall injuries on the work site. The approach involves the fabrication of temporary towers to support the piece by piece fabrication of the major components in their final place.

The advantage of aerial assembly is that it avoids the necessity of having a large capacity crane and fabrication errors may be discovered and corrected without postponing a single milestone lifting event. The disadvantage of the aerial assembly is the loss of productivity and potential for accidents related to high work.

Some issues for the designer to be aware of include:
There is the potential for unexpected loads may be introduced in the structural framing system by poorly designed shoring towers or long term settlement of the shoring towers. The manner in which the temporary towers are removed may also introduce unexpected, albeit temporary, loads in the main structure.

<u>Economy of Framing Systems</u>

Hangar geometry is the single most significant factor influencing the efficiency of the structural system. The long clear span supporting the hangar door head, coupled with large column free interior spaces, is the factor which distinguishes the hangar structure framing system from most standard construction. The two most common structural systems large hangars, as typified by the Type 1 Maintenance Hangar, are the Header Truss and the Cantilevered systems.

Figure 2.3.1.5 is presented to provide planning guidance for the structural steel requirements in a Type I hangar and in selecting a primary structural system. The figure, developed from the review of recently designed facilities as well as conjectural facilities, displays trends with which the designer should become familiar.

The designer is cautioned that the figure is a simplification of the existing background information. The information presented is based upon the assumption that a standard Type I Maintenance Hangar is being produced. It has been further assumed that the hangar bay space is

approximately 25.5 meters (85 feet) deep and that the design conditions are as found in Norfolk, VA. The figure presents the pounds per square foot of structural steel required to construct a facility of roughly 7150 m^2 (77000 ft^2) total area. The pounds of steel per square area values are an average including both the hangar (OH) area and the office and shop (O1/O2) areas. It is assumed that the ratio between OH and O1/O2 areas remains relatively constant in all Type I facilities.

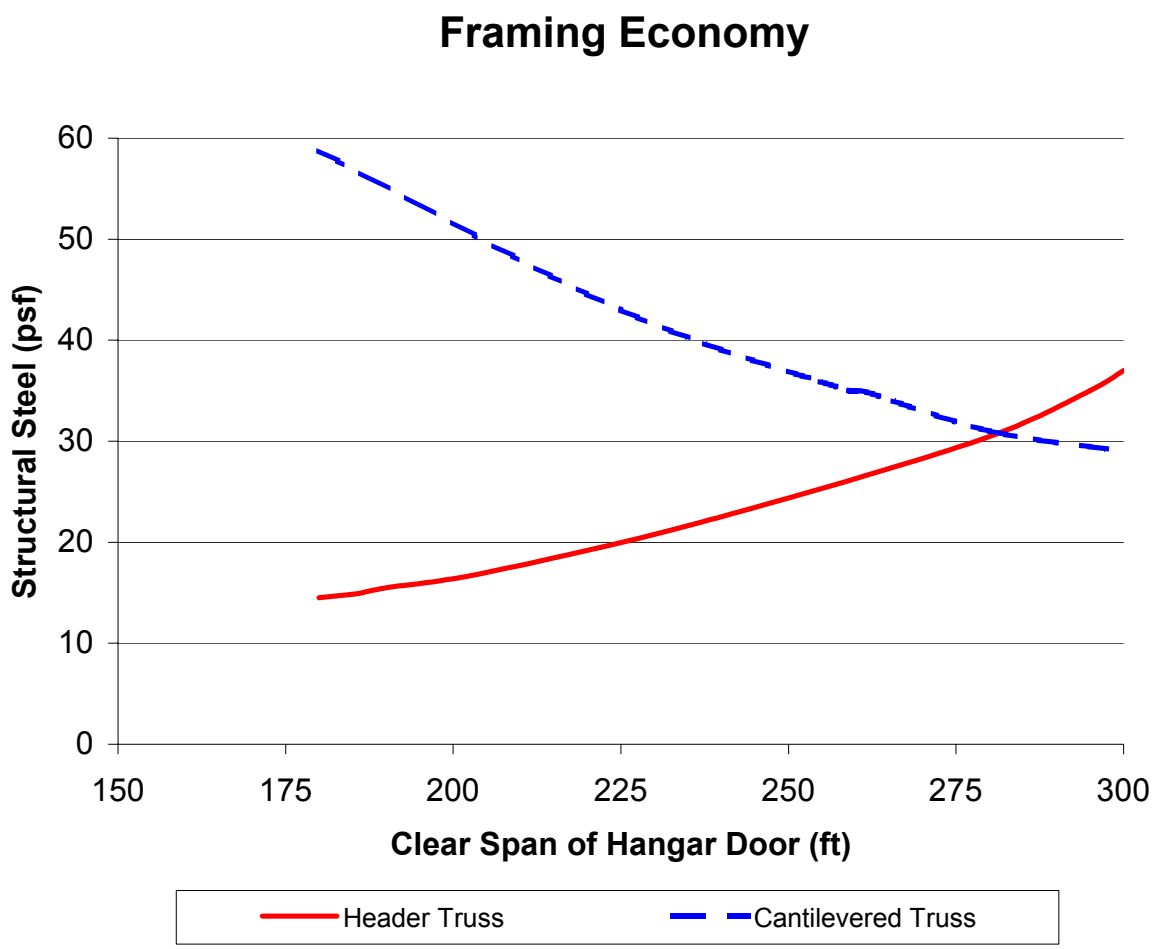

Figure 2.3.1.5

Roof Systems

Roof systems are typically metal deck on a combination of open web steel joist and structural steel substructure. Historically, it has been difficult to maintain the necessary level of quality control required to weld deck at sidelaps and at supports. The designer is cautioned to avoid deck specifying welding for roof decks unless necessary. Mechanical fasteners are the desired option. Additionally, there may be significant economy in erection by allowing pneumatic and powder actuated fastening systems. If welding is required, the designer should specify additional

quality control procedures to ensure that welds are done properly and do not deteriorate over time.

Diaphragms

Given the difficulty in providing lateral load resistance for the large open spans associated with hangar bay structures, it often appears desirable to incorporate the roof deck into the lateral load system as a flexible diaphragm. However, these same large spans involved in hangar structures often require large deflections in the frame before the deck produces the desired resisting forces. Designers should therefore avoid relying on a steel deck as a diaphragm in the hangar bay and provide a dedicated secondary horizontal lateral load system unless careful analysis is conducted on the deck's stiffness and load response. The deck may, however, be assumed to provide local support to elements, such as top chord/flange support to joists/beams.

The designer should consider whether it is permissible to support suspended loads directly from the underside of the steel deck. The contract drawings should clearly indicate when this is allowed and the means by which the connection is to be accomplished.

Wall Systems

Walls and partitions of the hangar bay should be non-load bearing. The walls of the O1/O2 portion of the facility may be designed as load bearing if structurally isolated from the hangar structure. This is particularly useful as that load bearing wall structures are typically more rigid than the steel frame of the hangar bay. The O1/O2 structure may or may not be built as an integral part of the hangar structure. In either case, the weight of the O1 and O2 structure may be used to help provide stability in those cases where additional dead load is desirable.

Exterior Walls

Side walls of the OH space should be insulated hollow concrete masonry units (CMU) sized in accordance with American Society for Testing and Materials (ASTM) C 90, Loadbearing Concrete Masonry Units or reinforced concrete (RC) walls to a height of 3.05 meters (10 feet) above the hangar deck. Above this height, use preformed (corrugated), protected-metal panels or similar materials. Alternatively, an interior wainscot wall of CMU or RC may protect an exterior wall of architectural facia which extends to the ground elevation.

The exterior walls of the O1 area, typically composed of shop spaces and other light industrial function, should be constructed of materials similar to that of the lower OH area. The material selection for walls of the O2 area, typically office space not expected to be exposed to the durability challenges of the O2, may be expanded to include light gage framing or similar construction.

Other miscellaneous or structurally independent buildings which may be part of the project, such as mechanical equipment enclosures and storage rooms, should be constructed with requirements similar to the O2 area.

In all cases, infill, curtain or other non-bearing walls should be designed in accordance with the components and cladding requirements of ASCE 7.

The designer must pay careful attention to detailing the connections between rigid wall elements and a flexible steel frame. Improper detailing may result in serious damage to the wall elements.

Unreinforced masonry is prohibited by the Minimum Antiterrorism Standards for Buildings (UFC 4-010-01).

Interior Partitions

The interior partitions of the O2 areas should be non-load bearing CMU. The interior partitions of the O2 areas should be metal studs. As with exterior walls, the designer is cautioned to carefully consider the connectivity between rigid wall elements and a flexible steel frame.

Floors

Ground floors are typically slabs on grade. In some circumstances with particularly poor geotechnical properties or schedules which do not allow for remediation, pile supported slabs may be desirable. Given that naval shore facilities are often located near the coast on sites with soils displaying poor load performance, careful consideration of long-term settlement is warranted. It is not untypical for the main structural frame to be built on deep foundations while the ground floor slabs are soil supported. In this circumstance, differential settlement is a potential risk to the serviceability of facility. The designer may wish to consider careful detailing between the floor slabs and the surrounding structure or, in the most severe circumstances, pile supporting the floor slab.

(1) Hangar Floor. Design the primary loading areas of the hangar floors in accordance with criteria in UFC-3-260-02 AIRFIELD PAVEMENTS. A typical load value of 12 kPa (250 psf) is a useful planning value for hangar bay design loads.

Hangar trench drains should be ductile iron or steel manufactured to withstand a minimum working load of 100,000 loads(250 psi). AFFF floor nozzles and supporting framework embedded in trench drain grating should be designed for 36,000 pounds distributed over area of nozzle surface. Hangar floors should be sloped towards hangar doors and drains. In all cases, the finished floor elevation of the hangar should be above the grade elevation surrounding the facility which in turn is below the finished floor elevation of the supporting shops and offices.

(2) Other Ground Floors. Design the slabs on grade in accordance with the American Concrete Institute (ACI) 360R-2 Design of Slabs on Grade. A floor load value of 6 kPa (125 psf) is typical for the O1 shop areas. Dedicated storage and/or mechanical equipment rooms may require heavier design loads.

(3) Floors above Grade. Above ground floors are typically concrete topping on steel deck over structural steel or open web steel joists. The concrete may or may not be composite with the system depending upon the design goal and considerations of economy.

(4) Other. There may be a requirement for catwalks, mezzanines, etc. fabricated from steel bar gratings, diamond tread steel deck or more esoteric materials. These surfaces should be designed according to the applicable codes for the loads and criteria determined by the design professional.

Doors

Doors should meet the criteria defined elsewhere in this handbook. Design hangar doors in accordance with components and cladding, Wind Pressure coefficients determined in accordance with ASCE 7. Designers should consider the full operating range of the roof structure and wind uplift to design door guide system.

Designers are cautioned to consider air leakage around hangar doors when determining internal pressure coefficients for wind analysis. The commentary of ASCE 7 recommends against assuming that hangar doors in the closed position are sufficiently air tight to consider the building as "enclosed." However, if the "partially enclosed" condition is deemed appropriate, the large volume reduction factor for the internal pressure coefficient mitigates the effect substantially.

Horizontal Rolling Hangar Doors

Horizontal rolling hangar doors are typified by supporting their own gravity load and only imparting lateral (wind, seismic) loads to the main structural system through a track system at the door head. Furthermore, an extensive structure is required at grade to support the bottom door tracks as well as some means to ensure that the bottom tracks remain clear of obstructions.

Depending upon the requirements of the end user, the entire clear span of the door may or may not be available for use. If there is a requirement that the entire span be available, the designer must make provision for door pockets at one or both ends of the hangar. The inclusion of door pockets will typically require a tall, laterally unsupported structure, outside of the regular plan of the building. Careful consideration of the resulting effects on the structural response to lateral loads in required.

Vertical Lifting Fabric Hangar Doors

Vertical lifting fabric doors are lighter than rolling doors, but their entire weight must be carried by the superstructure. Additionally, beyond a practical limit of about 15 m (49 ft) multiple door leaves are required. A complicated swinging mullion with additional overhead equipment is required for every vertical lift fabric door beyond the first. However, vertical lifting fabric doors do not require door pockets to entirely clear the hangar opening nor do they require extensive support at grade.

Vertical Lifting Rigid Hangar Doors

Vertical lifting rigid doors are only practical for relatively short spans and are not found with the swinging mullions of the fabric doors. Thus, beyond a limit of about 20 m (70 ft), an alternative door type must be selected. As with vertical lifting fabric doors, the rigid doors are completely supported by the structure. However, typically the door weight is carried by columns at each door jamb, rather than the roof structure. No door pockets are required and the entire doorway is available for use but the size limit is a serious drawback.

Open Doorway

Typically an open doorway is only used in remote sites or under expeditionary conditions. The facility would not be suitable for storm sheltering aircraft and the facility itself would also be much more vulnerable to storm damage.

FIRE PROTECTION

The fire protection design should be in accordance with the latest edition of UFC-3-600-01. Water supplies for aircraft hangars should also be in accordance with the latest edition of UFC-3-600-01.

Fire Suppression System

The fire suppression system for all aircraft maintenance hangars containing fueled aircraft shall consist of an overhead wet pipe sprinkler system with low temperature, quick response sprinklers, and a low-level AFFF system that shall be designed in accordance with NFPA 409. The overhead system shall be closed head, water only sprinklers. A pre-action system shall only be allowed where there is a risk of sprinkler pipes freezing. The system shall activate automatically. The low-level system shall consist of a system of nozzles located in the floor trench drains. Activation of the low-level shall be manual and automatic. Actuation of a manual releasing station, optical detector or the overhead sprinkler system shall release the low-level system.

Floor Drainage

Provide apron and hangar floor drainage in accordance with NFPA 409. Floor drains in aircraft storage and service areas should be trench-type drains designed with sufficient capacity to prevent buildup of flammable/combustible liquids and water over the drain inlet when all fire protection systems and hose streams are discharging at the design rate. Maximum trench spacing will be dictated by the spray pattern of the trench nozzles, manufacturer's nozzle data should be consulted for this information. The trench must be of adequate size to contain a 6 inch pipe (approximately) with fittings for the AFFF trench system. The width and depth of all trench drains should be calculated accordingly. In addition, the trench drains should have sufficient room to accommodate mounting the floor-level AFFF solution system piping and nozzles where provided. Floor drains should be in accordance with appropriate facility plates and Figure 3, Trench Drain Detail and Figure 4, Trench Plate Arrangement.

Draft Curtains

Provide non-combustible draft curtains to separate the hangar bay roof area into individual sections not exceeding 697 square meters (7,500 square feet) in area. Draft curtains should be constructed and installed in accordance with NFPA 409.

O1/O2 Level Spaces

Automatic, wet-pipe sprinkler system should be provided in areas of the hangar facility not requiring AFFF sprinkler protection.

Fire Alarm Systems

Provide manual and automatic building fire alarm system reporting to the base-wide system.

Hangar Bay Detection

Provide triple-IR optical flame detectors in the Aircraft Hangar Bays. These shall be connected to the suppression system-releasing panel and shall activate the low-level AFFF System. This panel shall be separate from the building fire alarm panel. For speed of activation use a non-addressable releasing panel.

Emergency Shut-off Stations

Provide a "deadman" type emergency shut-off facility for the low-level AFFF system. Operation of these stations shall stop the flow of foam and water to the low-level system. The stations shall be non-latching and require continuous depression to maintain a stop of the system. Release of the stations shall return the system to operation. Actuation and release of the stations when the low-level system has not been activated shall have no effect.

Fire Pumps

Fire Pumps, when required, are a part of the project scope. The fire protection requirements should be evaluated to be able to utilize a single set of pumps in lieu of providing pumps for multiple hangars. The design agency should provide for adequate space to accommodate the pumps and facilitate their maintenance. Consideration should be given to accommodate the pumps in a separate building.

Structural System Protection

NFPA 409 requires that all main steel structural columns in the hangar bay be made fire resistant using listed materials and methods to provide a fire resistive rating of not less than 2 hours. Fixed water systems, as an extension of the overhead sprinkler system, shall be permitted in lieu of a 2-hour fire resistance rating, if such systems are specifically designed to protect the columns.

Water Supply

The water supply shall be capable of maintaining water discharge for the combined low-level sprinkler systems at the design rate for a minimum of 45 minutes.

Figure 2
Typical Low-Level AFFF System Piping

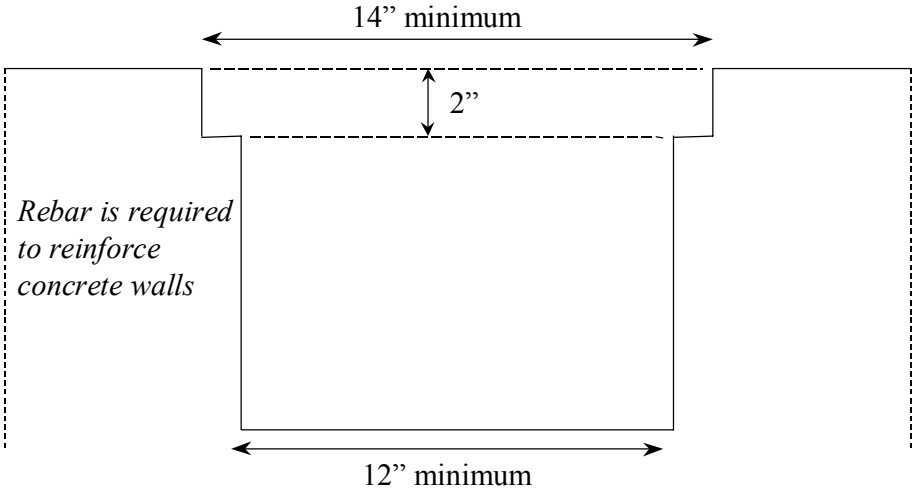

Figure 3
Trench Drain Detail

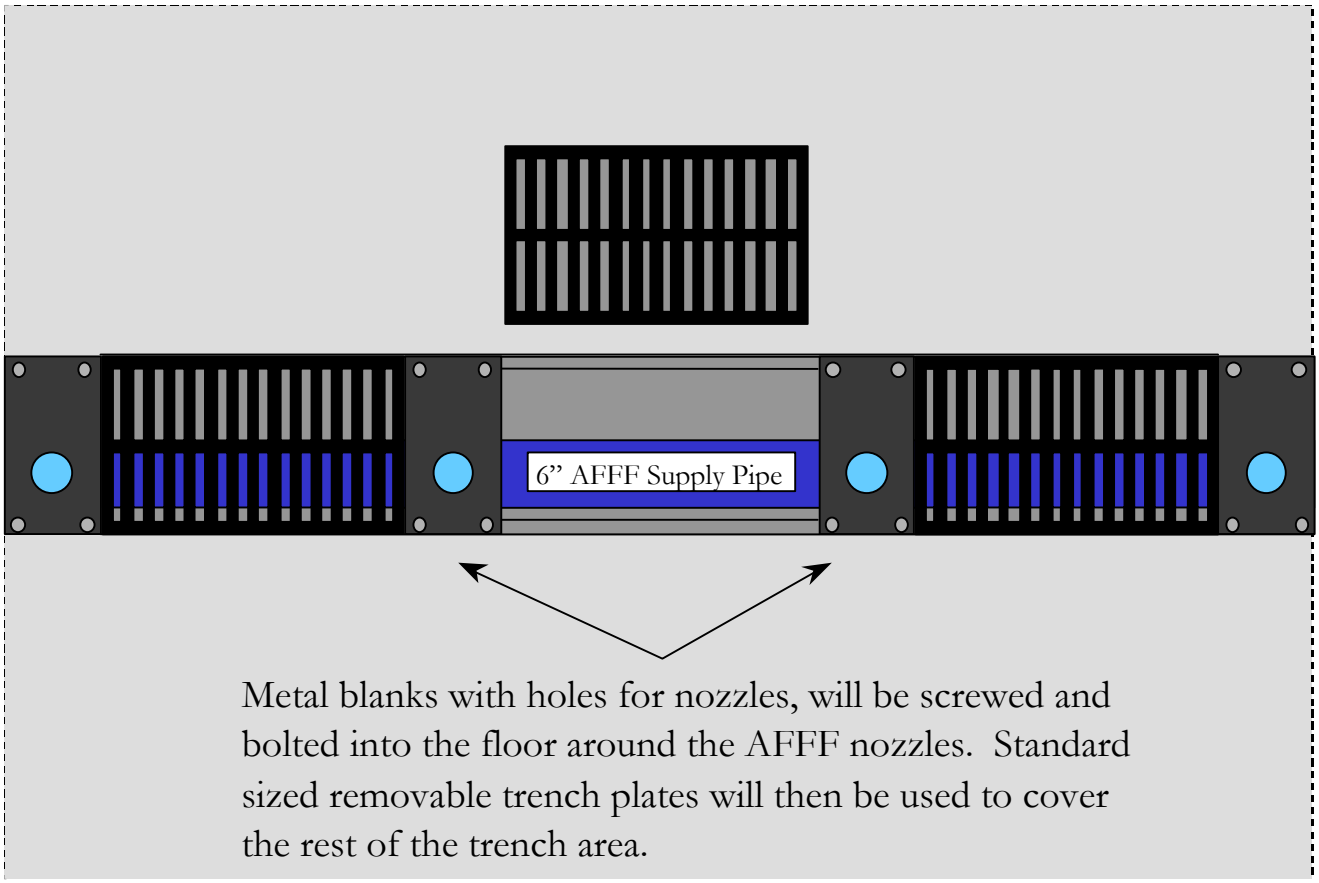

Figure 4
Trench Plate Arrangement

Figure still under development.

Figure 5
Typical Rear Wall Riser Diagram

MECHANICAL REQUIREMENTS

Heating

Heating shall be provided in accordance with MIL-HDBK-1003/3 and as follows:

a) Design for an infiltration rate of two air changes per hour in the OH area. This rate is dependent upon the installation of nylon brush insulation seals on the hangar sliding doors.

b) A switch activated by opening the hangar doors should override the space thermostat to stop the heating equipment in the OH area. Provide a minimum temperature thermostat field set at 1 degree C (34 degrees F) to override the heating deactivation switch during door-open periods of subfreezing ambient temperatures. After the doors are closed, the room thermostat should assume control. Heating system recovery time should be 30 minutes after the doors are closed.

c) A snow-melting system at the hangar door tracks, when sliding hangar doors are used, should be installed when outside design temperature is -4 degrees C (+25 degrees F) or lower and historical snow accumulation data supports the requirement.

d) The use of an under floor heating system should be investigated for the OH area when outside design temperature is below -23 degrees C (-10 degrees F).

e) The automatic thermostatic control shall meet the requirements of MIL-HDBK-1003/3.

f) Each module in the OH area should be a separate heating zone.

g) See the facility plates for design conditions.

h) Consider the installation of Naval Facilities Engineering Service Center (NFESC) cold jet destratifiers based on an economic analysis.

System Selection

Special consideration shall be given to the climate of the geographical region concerned when designing the heating system.

A detailed Life Cycle Cost Analysis and Energy Budget shall be performed to determine the most suitable mechanical system alternative. Particular attention should be paid to the cost benefits of a steam verses gas supply system, under-floor heating against over-head radiant heating or unit heaters, and initial, repair and maintenance costs should also be carefully considered.

Ventilation

Ventilation shall be provided in accordance with MIL-HDBK-1003/3 and as follows:

a) Toxic fumes and combustible vapor that generate in work areas shall be exhausted directly to the outside. The Airframes, Corrosion Control and Electric Shops are likely producers of toxic fumes. These shops shall always be provided with exhaust ventilation to the outside.

b) If fuel systems maintenance is performed in the OH spaces, a system for purging the fuel line and the tanks shall be provided. A fuel vapor exhaust system shall also be provided.

Air Conditioning

Air conditioning shall be provided in accordance MIL-HDBK-1003/3 and MIL-HDBK-1190. Automatic thermostatic control shall be provided, and equipment shall be shut down when not required for cooling. Air conditioning is not required in the general OH space.

Mechanical Equipment Requirements

Locate exterior mechanical equipment out of sight or provide screen walls. Do not locate mechanical equipment on roofs. Mechanical rooms and exterior enclosures shall be sized to accommodate manufacturer's recommendation for service, air flow and maintenance. Provide variable frequency drives where applicable. Connect direct digital controls to base wide monitor system.

Corrosion Protection

Provide special finish coatings on the interior and the exterior surfaces of HVAC equipment exposed to the weather, including all coil surfaces and interior equipment surfaces belonging to the first HVAC equipment (excluding louvers) in the supply ductwork system that is subjected to outside supply air. The coating shall not act as an insulating barrier to the HVAC heat exchange capability.

Force Protection

Air intakes within two-story structures will be positioned above the level of the first floor ceiling height. For single-story areas such as the mechanical room, the underside of all intake louvers must be at +3000mm minimum, and in accordance with AP2.6.1.

When a height restraint requires a roof mounted location, the exhaust louvers and hoods for equipment such as exhaust fans and the boiler fume exhaust stacks must be relocated to ensure

that cross contamination with the fresh air intake can not occur, all in accordance with the International Mechanical Code, 401.7.1 and with NFPA-90A, 2-2.1.1

The DDC system shall include an emergency shut-off switch that will immediately shut down the heating, ventilation and air conditioning (HVAC) system of inhabited structures, in accordance with AP2.6.3.

Plumbing

Plumbing shall be provided in accordance with NAVFAC DM 3.01 Plumbing Systems, and shall provide:

a) Toilet and shower facilities for both sexes on both the O1 and O2 levels.

b) An adequate storm drainage system,

c) Trench drains with sufficient laterals for aeration and easy cleanout of oil or other residue,

d) Emergency shower/eyewash fixtures and floor drains, as shown in the facility plates and conforming to ANSI Z358.1, Emergency Eyewash and Shower Equipment,

e) An oil/water separator for trench drains,

f) Storm drains located a minimum of 305 mm (12 inches) from the hangar access door rails, and

g) Aqueous film-forming foam (AFFF)/sprinkler discharge collection/retention system when required by environmental regulations.

h) Hazardous materials are used in the aircraft maintenance process. Floor drains in the OH space and shop spaces should be tied to either the station industrial sewer or to a collection system that will capture and hold these materials for proper disposal. The design will comply with all applicable environmental codes.

Compressed Air

Compressed air shall be provided for all O1 level shop spaces at 0.018 m^3/s (40 cfm) and 862 kPa (125 psi) and for hangar (OH) space as required by MIL-HDBK-1028/6, Aircraft Fixed Point Utility Systems for hangar service points.

Noise and Vibration Control. Mechanical systems and equipment shall be designed to limit noise and vibration in accordance with Army TM 5-805-4.

ELECTRICAL REQUIREMENTS

Electrical equipment installations shall as a minimum comply with NFPA 70. Electrical systems shall be provided in accordance with the electrical engineering criteria manuals and this handbook.

Hangar (OH) Space

The maintenance hangar (OH) space shall be designed to meet the criteria set forth below.

Electrical equipment in the hangar (OH) space should be waterproof, NEMA Type 4 (minimum rating) when deluge sprinkler protection is provided to prevent equipment damage in the event of testing or accidental discharge of the deluge system.

Hazardous Zones

Areas in high bay space shall be classified as hazardous or non-hazardous in accordance with NFPA 70. All electrical installations shall meet applicable requirements. To the extent possible, electrical installations should not be located in hazardous zones.

Power Service Points

MIL-HDBK-1028/6 identifies the various types, the capacity, and the location and installation requirements of electrical power to be provided at the power service points. Aircraft power service points should be positioned as required to provide adequate connections to aircraft to be maintained in the hangar. The power service points will provide:

a) Three phase, 115/200V, 4 wire, 400 Hz, (kVA ratings shall be as required by aircraft type).

b) Three phase, 100 Amp, 480 V, 4 wire, 60 Hz, with (Class L) receptacles for GSE. Special purpose receptacles designed to mate with standard government equipment shall be Military Part Number MS90555C44152P. This receptacle is built by very few manufacturers and shall be indicated as such. Designer shall coordinate required outlet requirements with the using activity.

c) Single phase, 120 V, 60 Hz, ground fault interrupt duplex utility outlets.

d) 28 V direct current (kVA ratings shall be as required by aircraft type)

e) External aircraft power provided by the power service points must be within the voltage and frequency tolerances specified for aircraft type. The flexible power cable to the aircraft must be adequately sized to meet the specified aircraft loading (amperage) requirements. Spiral wrapped, six around one, flexible cables, designed specifically for 400-hertz systems should be considered.

Refer to MIL-HDBK-1004/5, 400 Hertz Medium-Voltage Conversion/Distribution and Low-Voltage Utilization Systems for 400 Hz power requirements and to criteria for OH space power and grounding requirements for aircraft maintenance.

Recent developments in aircraft power requirements are leading to providing individual power units for each aircraft power connection. Designer shall coordinate all requirements with using activity and aircraft manufacturer and dedicate adequate wall space for all equipment.

Emergency Power

Provide emergency power as required or dictated by mission. Typically emergency lighting shall be provided with battery backup units. Hangar doors shall be configured such that they are operable during power outages. Operation may be by either manual or electrical means. Designer shall coordinate and provide for any emergency power requirements for hangar door operation during power outages.

O1/O2 Level Spaces

Power outlets shall be provided for shop tools and at shop bench locations. Dedicated circuits shall be provided to the extent possible for tools and equipment.

Grounded convenience outlets at 60 Hz, 120 V, 20 A, capacity should be provided throughout the O1/O2 level administrative, personnel, and shop spaces and as required by NFPA 70. Provide ground fault interrupt (GFI) receptacles in locations required by NFPA 70.

Shop spaces should be served by distinct panels dedicated to shop and equipment loads only. Office spaces should not be tied directly to shop circuits or panels.

Harmonics in office spaces shall be considered and K-Rated transformers shall be used where circuits warrant their use.

Lighting

Interior Lighting

Interior lighting in the hangar (OH) space shall be an energy-efficient type, such as high-pressure sodium vapor or metal halide. Metal halide should be used when specific tasks require good color rendition. Designer shall provide connections for task lighting under shadow of aircraft.

Other interior lighting shall be fluorescent. Lighting intensities shall be designed in accordance with MIL-HDBK-1190, IES Handbook and with customer needs. Minimize fixture and lamp types to keep maintenance inventories to a minimum. Design shall take into consideration the reflectance of wall and floor surfaces, especially in hangar (OH) spaces.

The following lighting options should be considered: Multiple switching of fixture groups and or lamps, occupancy sensors in restrooms, closets and other normally unoccupied areas, daylight sensors and controls. Design to conserve energy, but provide a pleasant and comfortable work environment.

Exterior Lighting

Exterior lighting should use high-pressure sodium lamps where practical and should be in accordance with MIL-HDBK-1004/4, Electrical Utilization Systems. Provide a photoelectric control switch for exterior lighting when all night lighting is required for safety or security reasons. Photoelectric controls should be used in conjunction with programmable lighting contactors where individual or groups of lighting can be turned off at specific times after dark.

Grounding

The maintenance hangar shall be provided with flush mounted, floor static ground receptacles, each with a 3/4-inch (19 mm) diameter ground rod, located at a minimum of 7.3 m (24 foot) centers across the centerline of the OH space. Additional static ground receptacles shall be located around dedicated aircraft parking areas to facilitate the use of grounding connections. When aircraft are parked outside of the hangar, static ground receptacles shall be provided on parking aprons. Resistance to ground shall not exceed 25 ohms maximum. Ground receptacles shall be connected together with No. 4 AWG minimum bare copper below the hangar floor and connected to the facility grounding system. See Figure 1 for typical static grounding details.

Lightning Protection

In Maintenance Hangars where weapons handling operations are expected, lightning protection shall be provided in accordance with NAVSEA OP-5, Ammunition and Explosives Ashore Safety Regulations for Handling, Storing, Production, Renovation and Shipping. NAVSEA OP-5 applies only to weapons handling operations. All other hangars shall be provided with lightning protection in accordance with NFPA 780, Installation of Lightning Protection Systems and MIL HDBK 1004/6 Lightning Protection.

Organizational Communications

3M Communications (Maintenance and Material Management)

An independent stand alone, Type 1, Direct Connected Keyed, intercommunications system, with use restricted to aircraft maintenance and material operations only, should be provided. This system should provide two-way communications from line operations shacks outside the hangar to and between all rooms in the O1 level space except passages, locker and toilet rooms, and mechanical equipment room. The necessary raceway should be provided in new building construction, with provisions in some instances for interconnection with other buildings.

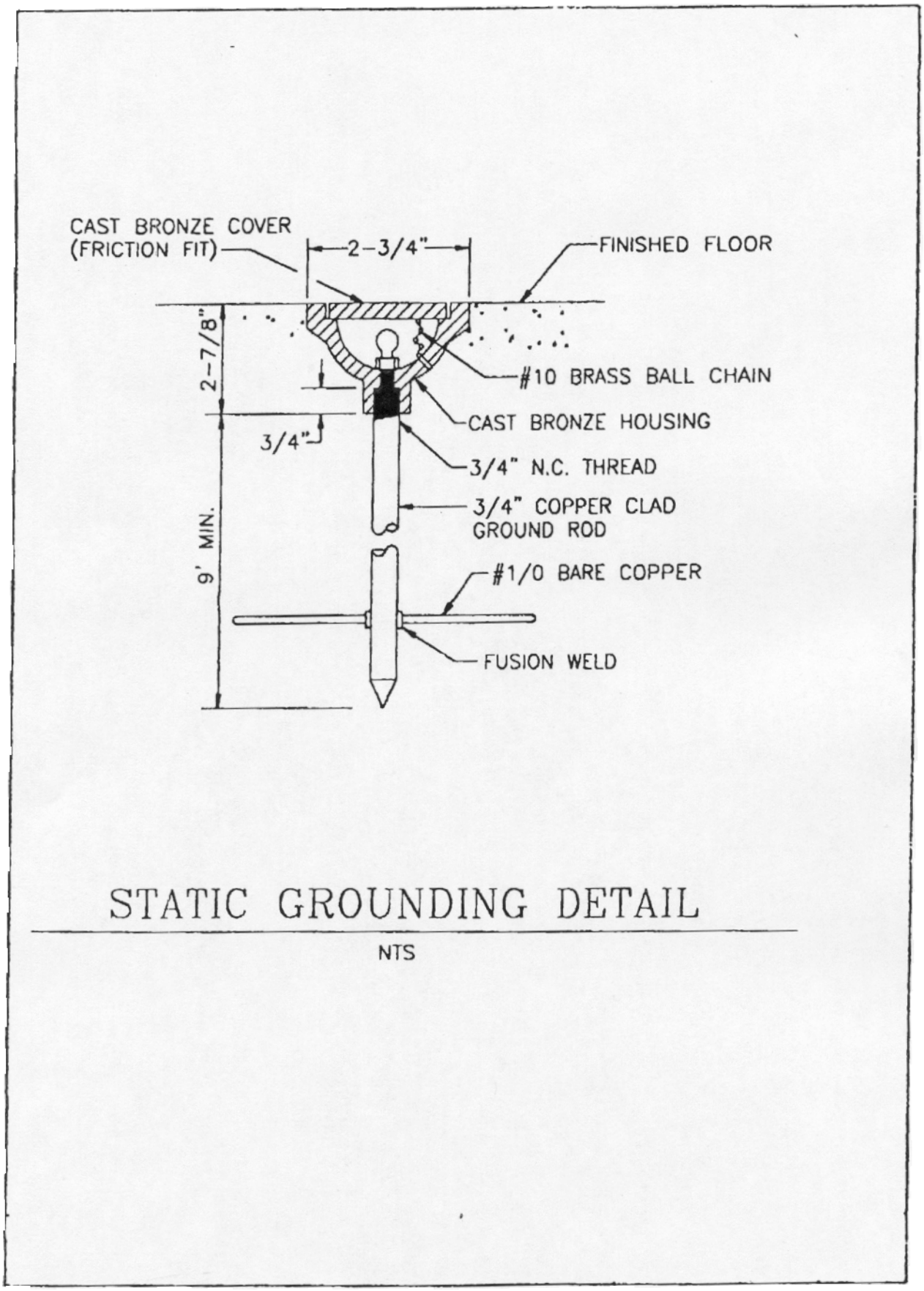

Figure 1
Static Grounding Detail

Intercommunications System

An intercommunications system, integral to the telephone system shall be provided to allow two-way communications between:

a) Rooms in the 01 and O2 level space except passages, locker and toilet rooms, and storage rooms;

b) Department heads and the commanding officer and executive officers of the squadron;

c) Officers' ready room and maintenance control

d) Administration office and maintenance administration.

Public Address System

A public address system, integral to the telephone system shall be provided to reach interior and exterior work areas and the aircraft parking apron. A separate handset type microphone shall be provided in the hangar (OH) space that will broadcast only to the hangar (OH) spaces.

Telecommunications Service Requirements for Voice, Data, and Video

For telecommunication, refer to MIL-HDBK 1012/3, Telecommunications Premises Distribution Planning, Design, and Estimating and EIA/TIA Standards Fiber Optic Service Preferred. Additional communications outlets shall be provided as required by mission. Additional communications outlets required shall include:

a) Base Radio System drops

b) Weather-Vision LAN

c) NALCOMIS Data Outlets

d) SIPRNET Data outlets

e) CATV outlets in training rooms

f) CCTV (video) for in house video training

g) CCTV (security)

REFERENCES

3a. UFC 4-010-01, “DoD Minimum Antiterrorism Standards for Buildings”, 31 July 2002

3b. NAVFAC P-80.3, “Facility Planning Criteria for Navy & Marine Corps shore Installations, Appendix E, Airfield Safety Clearances”, January 1982

3c. UFC 3-260-01, “Airfield and Heliport Planning and Design”, 1 November 2001

3d. MIL-HDBK-1190, "Facility Planning and Design Guide", 1 September 1987

3e. Executive Order 12372, "Intergovernmental Review of Federal Programs," July 14, 1982, 47 Federal Register 30959

3f. DoD Directive 4165.61, "Intergovernmental Coordination of DoD Federal Development Programs and Activities”, August 9, 1983

3g. Executive Order 11988, "Floodplains", May 24, 1977

3h. Executive Order 11990, "Protection of Wetlands", May 24, 1977

3i. 43FR6030, "Floodplain Management Guidelines", February 10, 1978

3j. Title 44, CFR 59-79, "National Flood Insurance Program"

3k. Executive Order 11514, "Protection and Enhancement of Environmental Quality", March 5, 1970 (as amended by Executive Order 11991, May 24, 1977)

3l. Public Law 91-190, "National Environmental Policy Act of 1969", January 1, 1970

3m. DoD Directive 6050.1, "Environmental Effects in the United States of DoD Action", July 30, 1979

3n. Chesapeake Bay Protection Act (CBPA)

3o. Uniform Federal Accessibility Standards (UFAS)

3p. Americans with Disabilities Act (ADA)

3q. NAVFAC P-89, "Facility Design and Planning Engineering Weather Data”, 1 July 1978

UFC 3-260-02 “Airfield Pavement Design” replaces MIL-HDBK-1021 Series