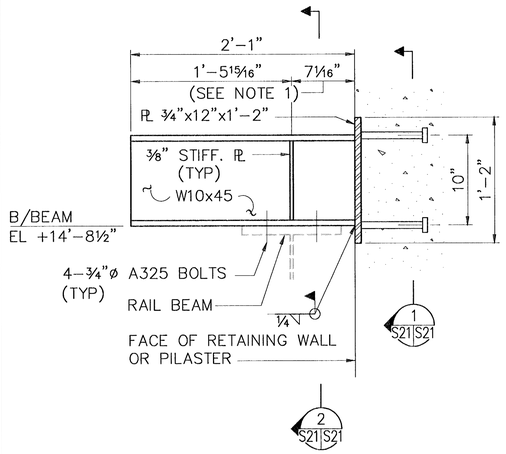

TYPE 1

NOTE 1: LOCATION OF RAIL BEAM TO BE VERIFIED BY DOOR MANUF.

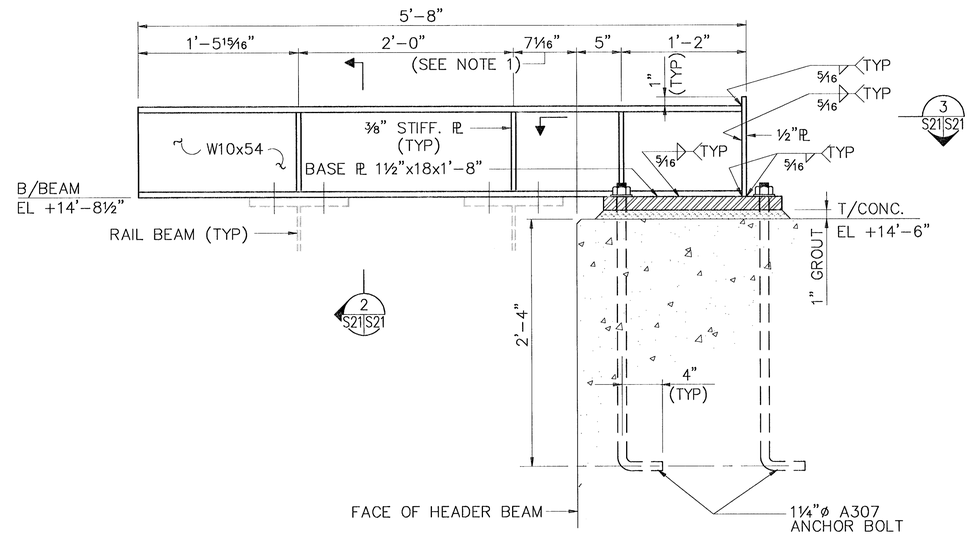

TYPE 2

DOOR RAIL SUPPORT BEAM DETAILS

SCALE: 1 1/2"=1'-0"

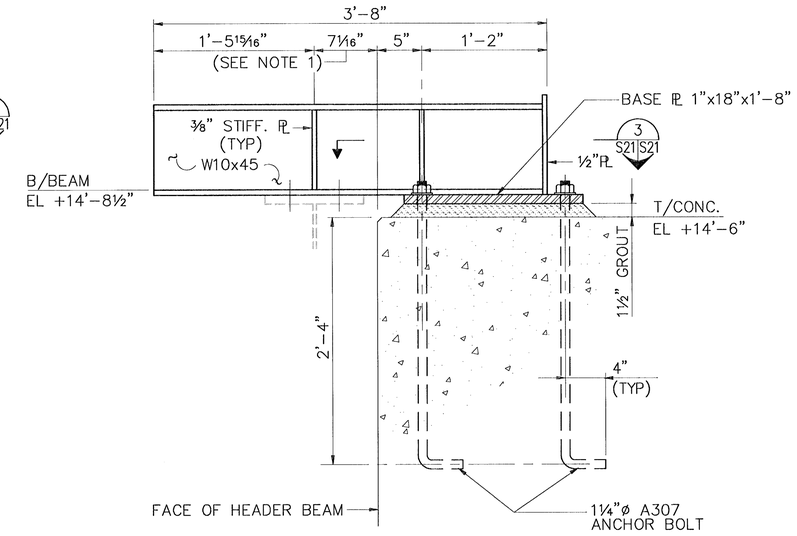

TYPE 3

NOTE: FOR DETAILS NOT SHOWN SEE TYPE 2 SUPPORT BEAM.

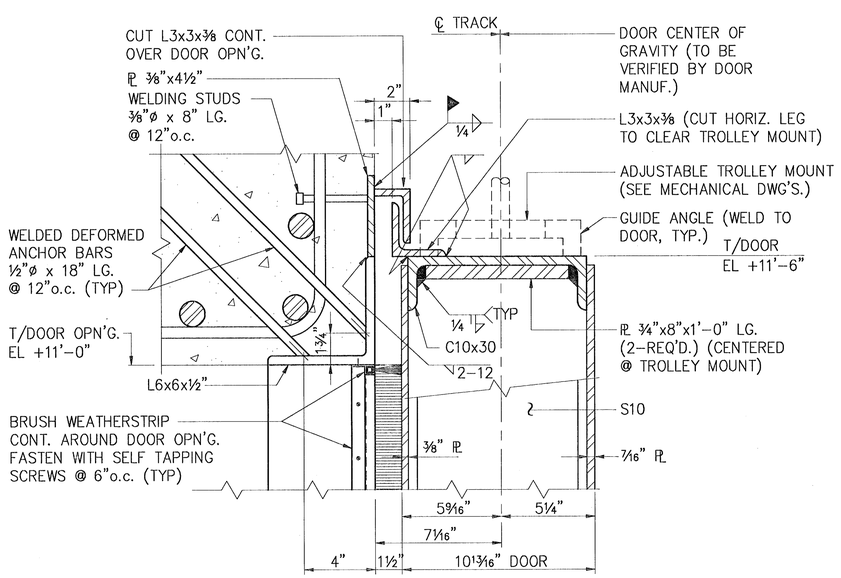

DETAIL 2

SCALE: 3"=1'-0" S17 S21

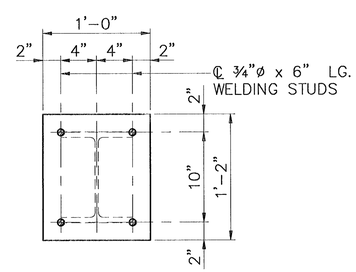

SECTION 1

SCALE: 1 1/2"=1'-0" S21 S21

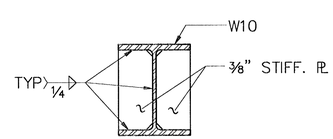

SECTION 2

SCALE: 1 1/2"=1'-0" S21 S21

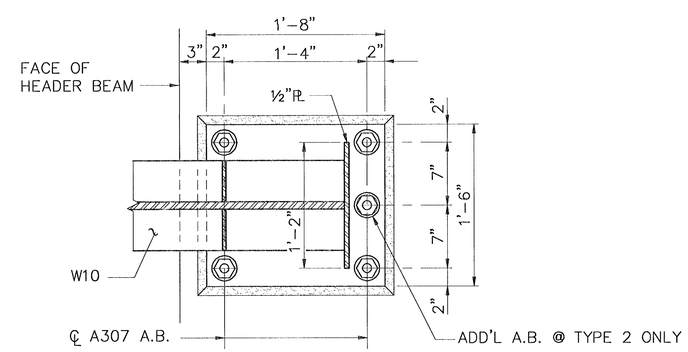

SECTION 3

SCALE: 1 1/2"=1'-0" S21 S21

IF SHEET IS LESS THAN (22" x 34") IT IS A REDUCED PRINT – SCALE REDUCED ACCORDINGLY

0 1' 3" = 1'-0" 1' 0 1' 1 1/2" = 1'-0"

SYMBOL	DESCRIPTION	PREP'D BY	DATE	APPROVED

REVISIONS

AMMANN & WHITNEY
CONSULTING ENGINEERS
99 MORTON ST., NEW YORK, NY 10014

PRINCIPAL (PRACTICE) — DATE 27/5/97
ENGINEER IN CHARGE — R. Brady
BRANCH MANAGER — R. Brady
CRITERIA MANAGER — R. Brady
DIVISION DIRECTOR
NAVFACENGCOM
FIRE PROTECTION ENGINEER — DATE
CRITERIA MANAGER — DATE
APPROVED — DATE
FOR COMMANDER NAVFACENGCOM

SATISFACTORY TO
TITLE — DATE

DEPARTMENT OF THE NAVY — WASHINGTON, D.C. 20350

NAVAL FACILITIES ENGINEERING COMMAND

STANDARD DRAWING

STANDARD BOX MAGAZINE TYPE 'F'

RAIL SUPPORT BEAM DETAILS

SIZE	CODE IDENT NO	NAVFAC DRAWING NUMBER	
D	80091	6,448,609	S-21
SCALE AS NOTED		CONTRACT NO	SHEET 21 OF 33
CATEGORY CODE		SPEC NO	

FILE NO. STFS21.DWG

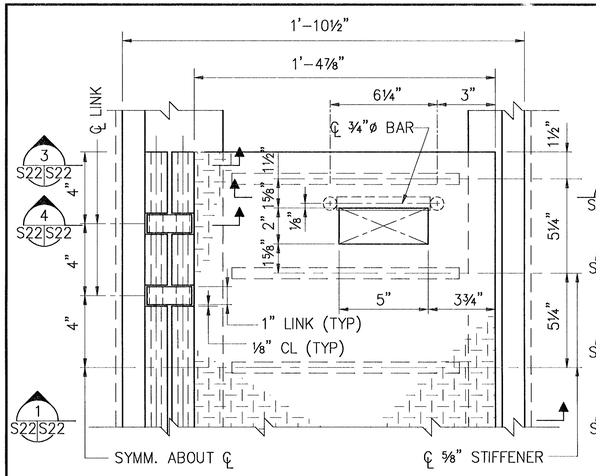

PARTIAL PLAN

SCALE: 3"=1'-0"

(TYPE 1 DOOR TRENCH COVER PLATE)

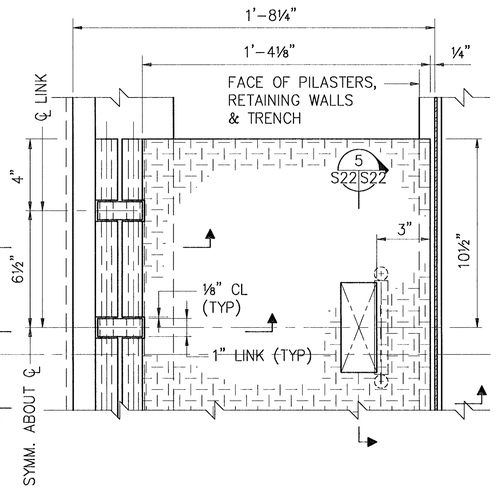

PARTIAL PLAN

SCALE: 3"=1'-0"

(TYPE 2 DOOR TRENCH COVER PLATE)

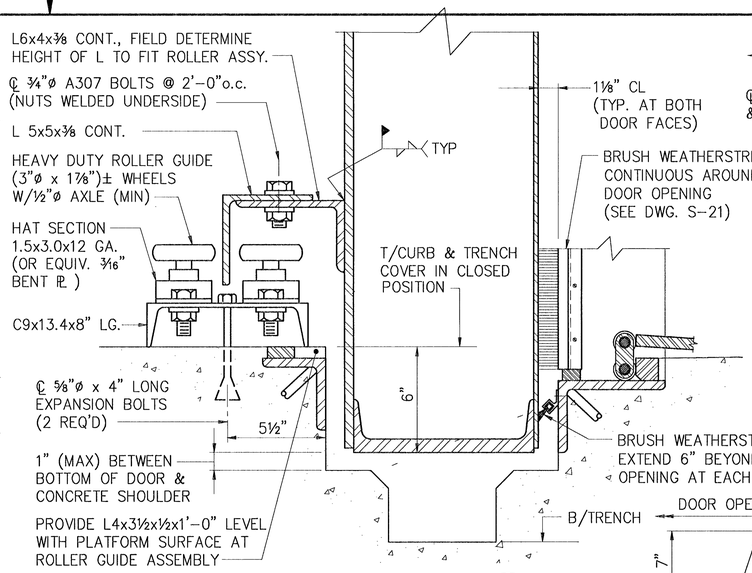

SECTION 5

SCALE: 3"=1'-0" S16|S22

ROLLER GUIDE ASSEMBLY

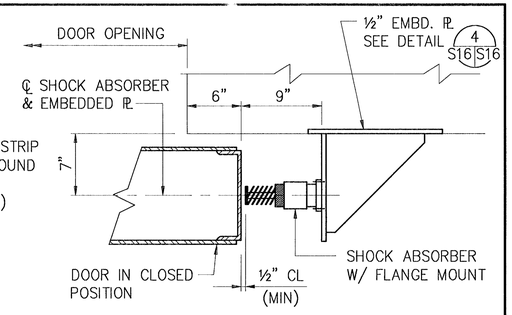

NOTE: FOR EMBEDDED PLATE LOCATION & DETAIL SEE DWG. S-16.

SECTION 6

SCALE: 1½"=1'-0" S16|S22

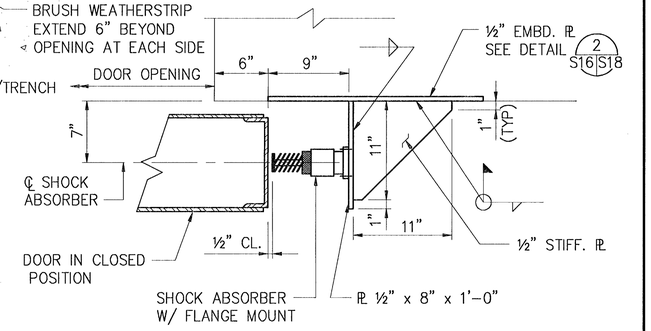

SECTION 7

SCALE: 1½"=1'-0" S16|S22

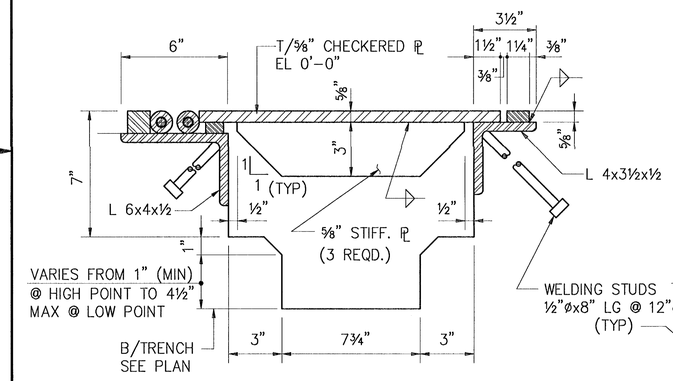

NOTES:

1. TRENCH COVER PLATES SHALL HAVE A MINIMUM f_y = 50 KSI.
2. TRENCH COVER PLATES AND ATTACHMENTS INCLUDINING HINGES AND PINS SHALL BE GALVANIZED.

SECTION 1

SCALE: 3"=1'-0" S22|S22

S2

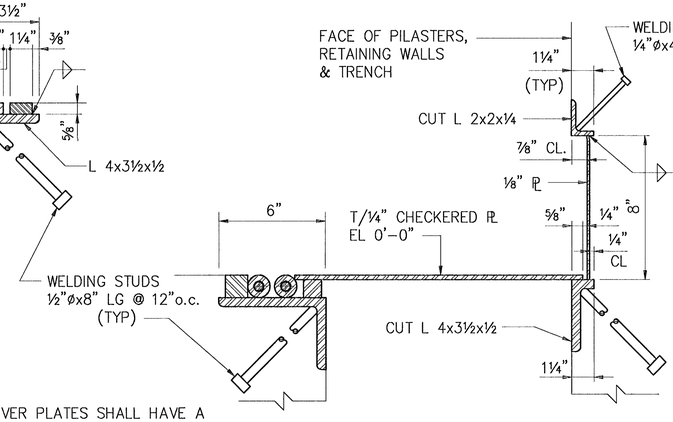

SECTION 2

SCALE: 3"=1'-0" S22|S22

S2

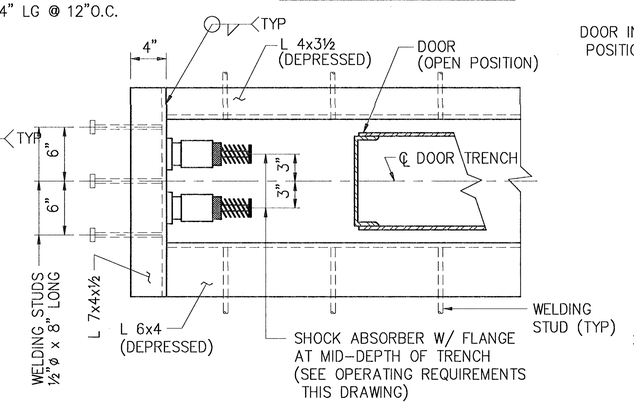

DETAIL 3

SCALE: 1½"=1'-0" S16|S22

DOOR BUMPER (IN TRENCH)

DOOR SHOCK ABSORBERS-OPERATING REQUIREMENTS

1. MAXIMUM DOOR SPEED 12 FT/MIN OPENING/CLOSING.
2. DOOR CLOSING SHOCK ABSORBER:
   AT PILASTER – QUANTITY = 2
   – STOPPING DISTANCE = 1 INCH
   – MAXIMUM FORCE PER SHOCK ABSORBER = 10,000 LBS
   – DUTY CYCLE = 10 DEFLECTIONS/HOUR
3. DOOR OPENINGING SHOCK ABSORBER:
   AT TRENCH – QUANTITY = 2
   – STOPPING DISTANCE = 2 INCHES
   – MAXIMUM FORCE PER SHOCK ABSORBER = 5,000 LBS
   – DUTY CYCLE = 10 DEFLECTIONS/HOUR

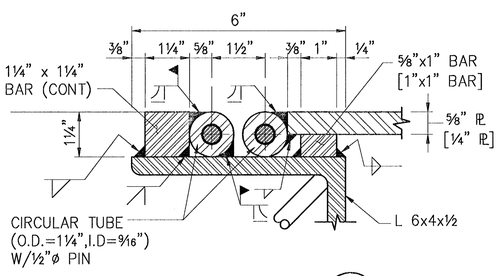

SECTION 3

SCALE: HALF SIZE S22|S22

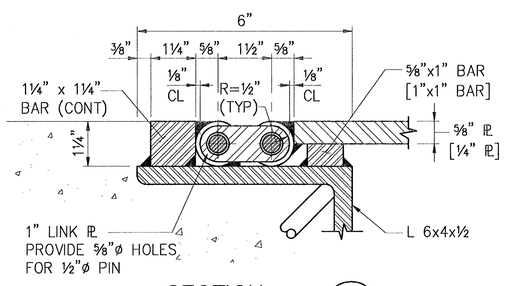

SECTION 4

SCALE: HALF SIZE S22|S22

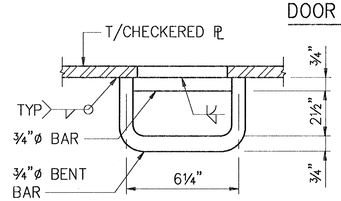

SECTION 5

SCALE: 3"=1'-0" S22|S22

NOTE: [ ] INDICATES DIMENSION FOR TYPE 2 TRENCH COVERS.

IF SHEET IS LESS THAN (22" x 34") IT IS A REDUCED PRINT – SCALE REDUCED ACCORDINGLY

0 1' 1' 0 1'

3" = 1'-0" 1½" = 1'-0"

SYMBOL	DESCRIPTION	PREP'D BY	DATE	APPROVED

REVISIONS

AMMANN & WHITNEY
CONSULTING ENGINEERS
98 MURRAY ST., NEW YORK, NY 10014

PRINCIPAL (PARTNER) — DATE 27/5/97
ENGINEER IN CHARGE — R. Brady
CRITERIA MANAGER — R. Brady
BRANCH MANAGER
DIVISION DIRECTOR
NAVFACENGCOM
FIRE PROTECTION ENGINEER — DATE
CRITERIA MANAGER — DATE
APPROVED — DATE
FOR COMMANDER NAVFACENGCOM

SATISFACTORY TO
TITLE — DATE

DEPARTMENT OF THE NAVY — WASHINGTON, D.C. 20350

NAVAL FACILITIES ENGINEERING COMMAND

STANDARD DRAWING

STANDARD BOX MAGAZINE TYPE 'F'

TRENCH COVERS, BUMPERS, DOOR GUIDES – DETAILS

SIZE	CODE IDENT NO	NAVFAC DRAWING NUMBER	
D	80091	6,448,610	S-22
SCALE AS NOTED		CONTRACT NO	SHEET 22 OF 33
CATEGORY CODE		SPEC NO	

FILE NO. STFS22.DWG

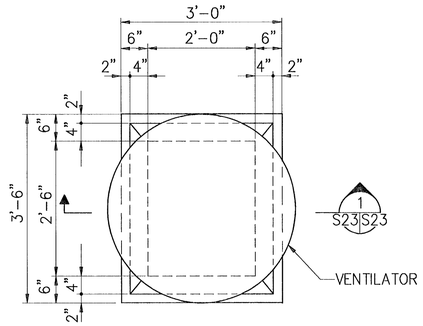

DETAIL 1 (S10 S23)
SCALE: ¾"=1'-0"

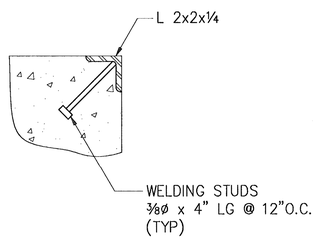

DETAIL 2 (S23 S23)
SCALE: 3"=1'-0"

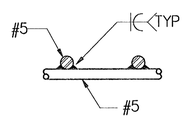

DETAIL 3 (S23 S23)
N.T.S.

NOTES:

1. VENTILATOR SHALL BE DESIGNED BY THE CONTRACTOR FOR A SUSTAINED WIND SPEED OF 132 M.P.H.
2. REFER TO DRAWING E-5 FOR LIGHTNING ROD LOCATION ON VENTILATOR.
3. ALL MOVING PARTS SHALL BE NON-SPARKING TYPE.
4. GRAVITY VENTILATOR SHALL BE INTRINSICALLY SAFE.

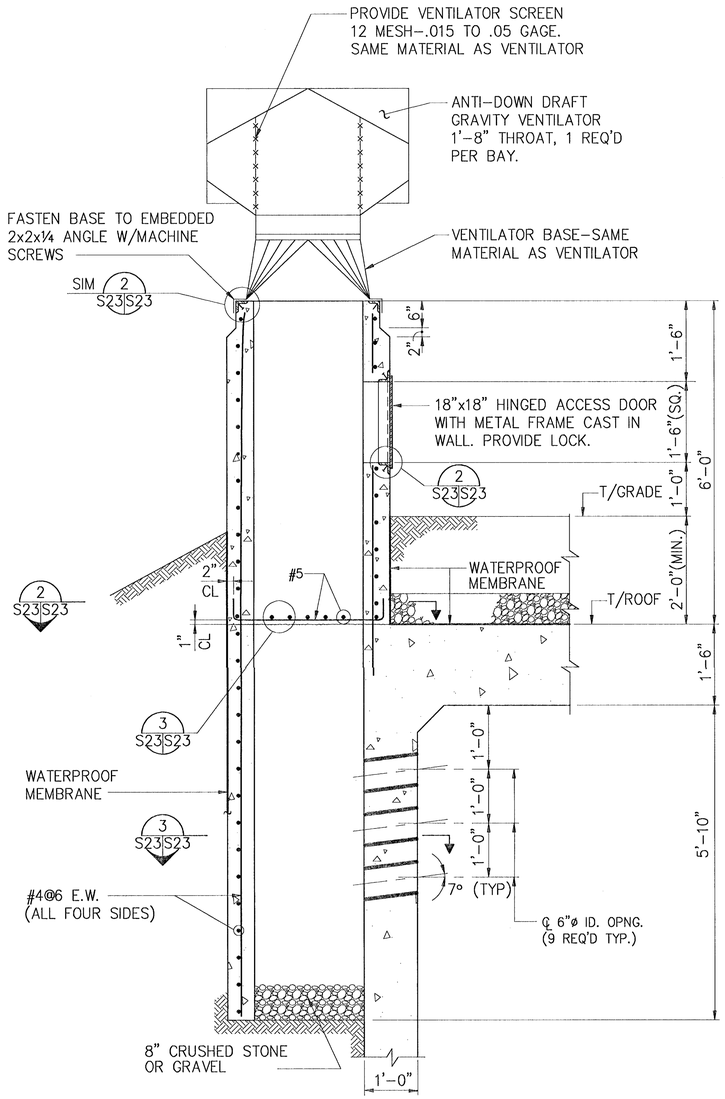

SECTION 1 (S23 S23)
SCALE: ¾"=1'-0"

DETAILS OF VENTILATOR SHAFT

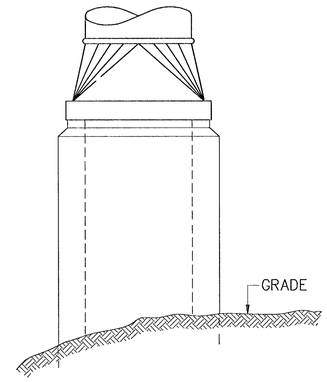

ELEVATION 1 (S23 S23)
SCALE: ¾"=1'-0"

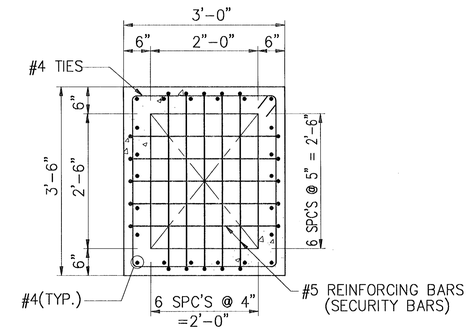

SECTION 2 (S23 S23)
SCALE: ¾"=1'-0"

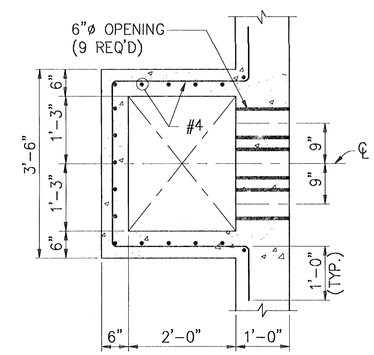

SECTION 3 (S23 S23)
SCALE: ¾"=1'-0"

SYMBOL	DESCRIPTION	PREP'D BY	DATE	APPROVED

REVISIONS

IF SHEET IS LESS THAN (22" x 34") IT IS A REDUCED PRINT – SCALE REDUCED ACCORDINGLY

0 1' 3" = 1'-0"

1' 0 3' ¾" = 1'-0"

SATISFACTORY TO
TITLE DATE

AMMANN & WHITNEY
CONSULTING ENGINEERS
96 MORTON ST., NEW YORK, NY 10014

PRINCIPAL (PRETING) 27/5/97 DATE
ENGINEER IN CHARGE R. Brody
BRANCH MANAGER R. Brody
CRITERIA MANAGER R. Brody
DIVISION DIRECTOR
NAVFACENGCOM
FIRE PROTECTION ENGINEER DATE
CRITERIA MANAGER DATE
APPROVED DATE
FOR COMMANDER NAVFACENGCOM

DEPARTMENT OF THE NAVY — WASHINGTON, D.C. 20350

NAVAL FACILITIES ENGINEERING COMMAND

STANDARD DRAWING

STANDARD BOX MAGAZINE TYPE 'F'

VENTILATOR DETAILS

SIZE	CODE IDENT NO	NAVFAC DRAWING NUMBER	
D	80091	6,448,611	S-23
SCALE AS NOTED		CONTRACT NO	SHEET 23 OF 33
CATEGORY CODE		SPEC NO	

FILE NO. STFS23.DWG

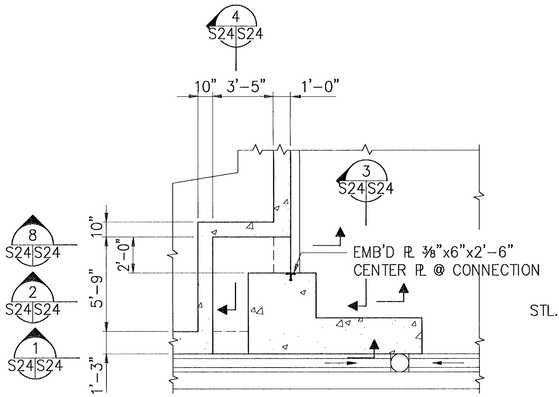

DETAIL 2 S2 S24
SCALE: 1/4"=1'-0"

DETAIL OF AIR INTAKE DUCT

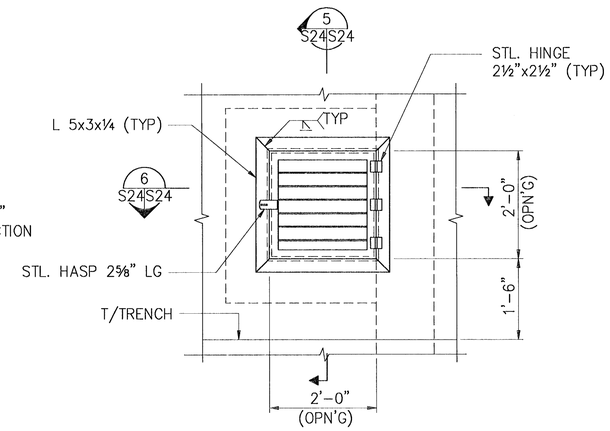

SECTION 1 S24 S24
SCALE: 3/4"=1'-0"

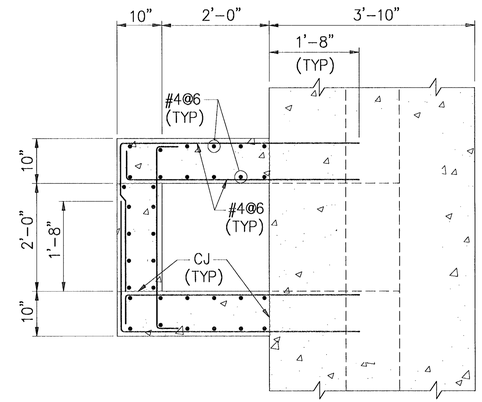

SECTION 2 S24 S24
SCALE: 3/4"=1'-0"

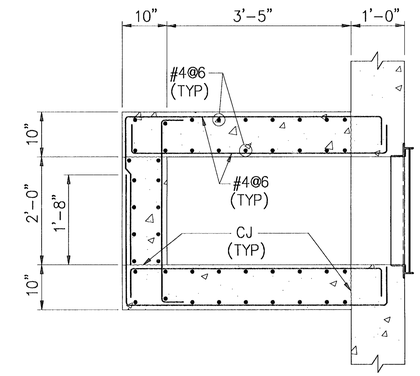

SECTION 8 S24 S24
SCALE: 3/4"=1'-0"

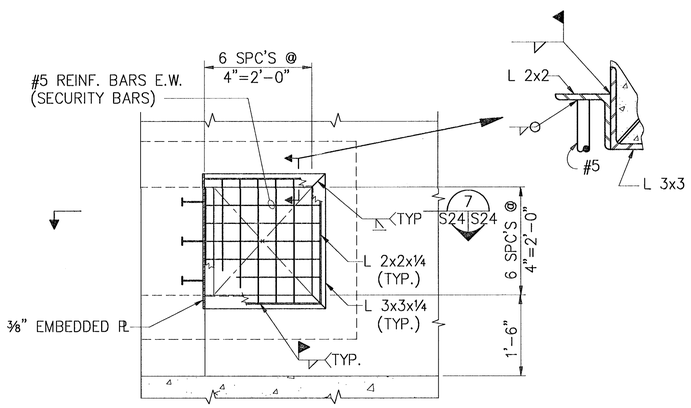

SECTION 3 S24 S24
SCALE: 3/4"=1'-0"

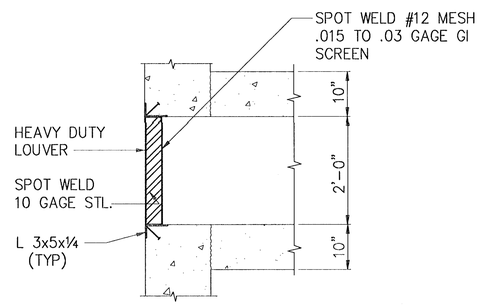

SECTION 5 S24 S24
SCALE: 3/4"=1'-0"

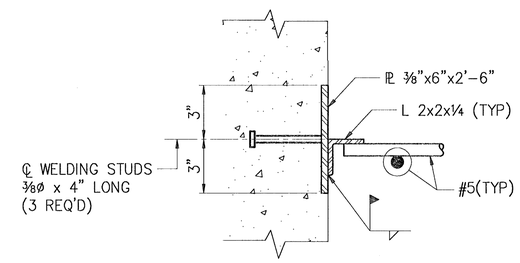

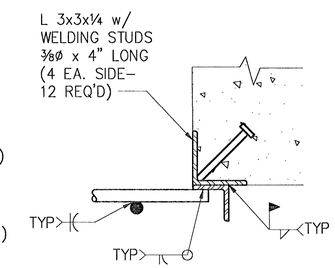

DETAIL 1 S24 S24
SCALE: 3"=1'-0"

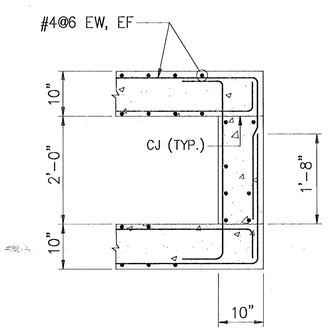

SECTION 4 S24 S24
SCALE: 3/4"=1'-0"

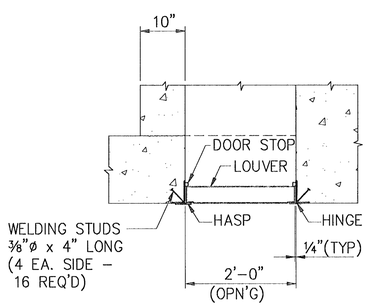

SECTION 6 S24 S24
SCALE: 3/4"=1'-0"

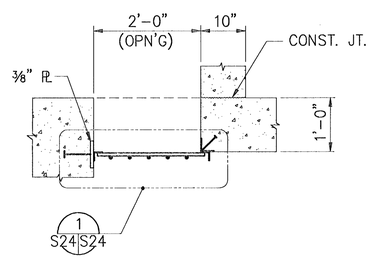

SECTION 7 S24 S24
SCALE: 3/4"=1'-0"

IF SHEET IS LESS THAN
(22" x 34")
IT IS A REDUCED PRINT -
SCALE REDUCED ACCORDINGLY

0 1' 1' 0 3' 2' 0 10'
3" = 1'-0" 3/4" = 1'-0" 1/4" = 1'-0"

SYMBOL	DESCRIPTION	PREP'D BY	DATE	APPROVED

REVISIONS

AMMANN & WHITNEY
CONSULTING ENGINEERS
99 MORTON ST., NEW YORK, NY 10014

PRINCIPAL (OPTIONAL) — DATE 27/5/97
ENGINEER IN CHARGE — BRANCH MANAGER
CRITERIA MANAGER — DIVISION DIRECTOR
NAVFACENGCOM
FIRE PROTECTION ENGINEER — DATE
CRITERIA MANAGER — DATE
APPROVED — DATE
FOR COMMANDER NAVFACENGCOM

SATISFACTORY TO
TITLE — DATE

DEPARTMENT OF THE NAVY — WASHINGTON, D.C. 20350

NAVAL FACILITIES ENGINEERING COMMAND

STANDARD DRAWING

STANDARD BOX MAGAZINE TYPE 'F'

AIR INTAKE DETAILS

SIZE	CODE IDENT NO	NAVFAC DRAWING NUMBER	
D	80091	6,448,612	S-24
SCALE AS NOTED		CONTRACT NO	SHEET 24 OF 33
CATEGORY CODE		SPEC NO	

FILE NO. STFS24.DWG

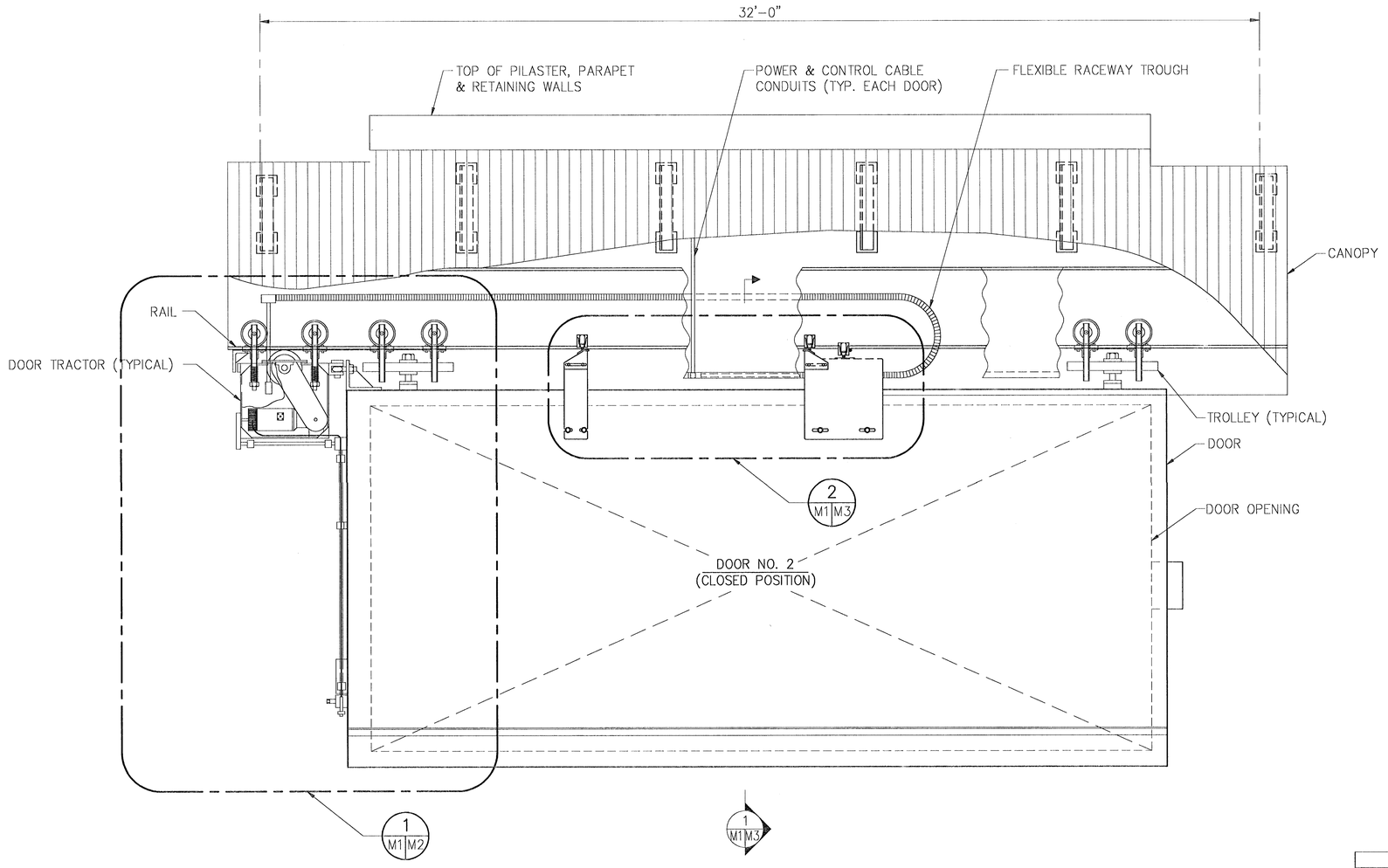

FRONT ELEVATION OF SLIDING DOOR

SCALE: NTS

IF SHEET IS LESS THAN (22" x 34") IT IS A REDUCED PRINT – SCALE REDUCED ACCORDINGLY

SYMBOL	DESCRIPTION	PREP'D BY	DATE	APPROVED

REVISIONS

AMMANN & WHITNEY
CONSULTING ENGINEERS
99 MORTON ST., NEW YORK, NY 10014

PRINCIPAL (PARTNER) — DATE 27/5/97
ENGINEER IN CHARGE — BRANCH MANAGER
CRITERIA MANAGER — DIVISION DIRECTOR
NAVFACENGCOM
FIRE PROTECTION ENGINEER — DATE
CRITERIA MANAGER — DATE
APPROVED — DATE
FOR COMMANDER NAVFACENGCOM

SATISFACTORY TO
TITLE — DATE

DEPARTMENT OF THE NAVY — WASHINGTON, D.C. 20350

NAVAL FACILITIES ENGINEERING COMMAND

STANDARD DRAWING

STANDARD BOX MAGAZINE TYPE 'F'

ELEVATION OF SLIDING DOOR OPERATOR

SIZE	CODE IDENT NO	NAVFAC DRAWING NUMBER	
D	80091	6,448,613	M-1
SCALE 1/8"=1'-0"	CONTRACT NO		SHEET 25 OF 33
CATEGORY CODE	SPEC NO		

FILE NO. STFM1.DWG

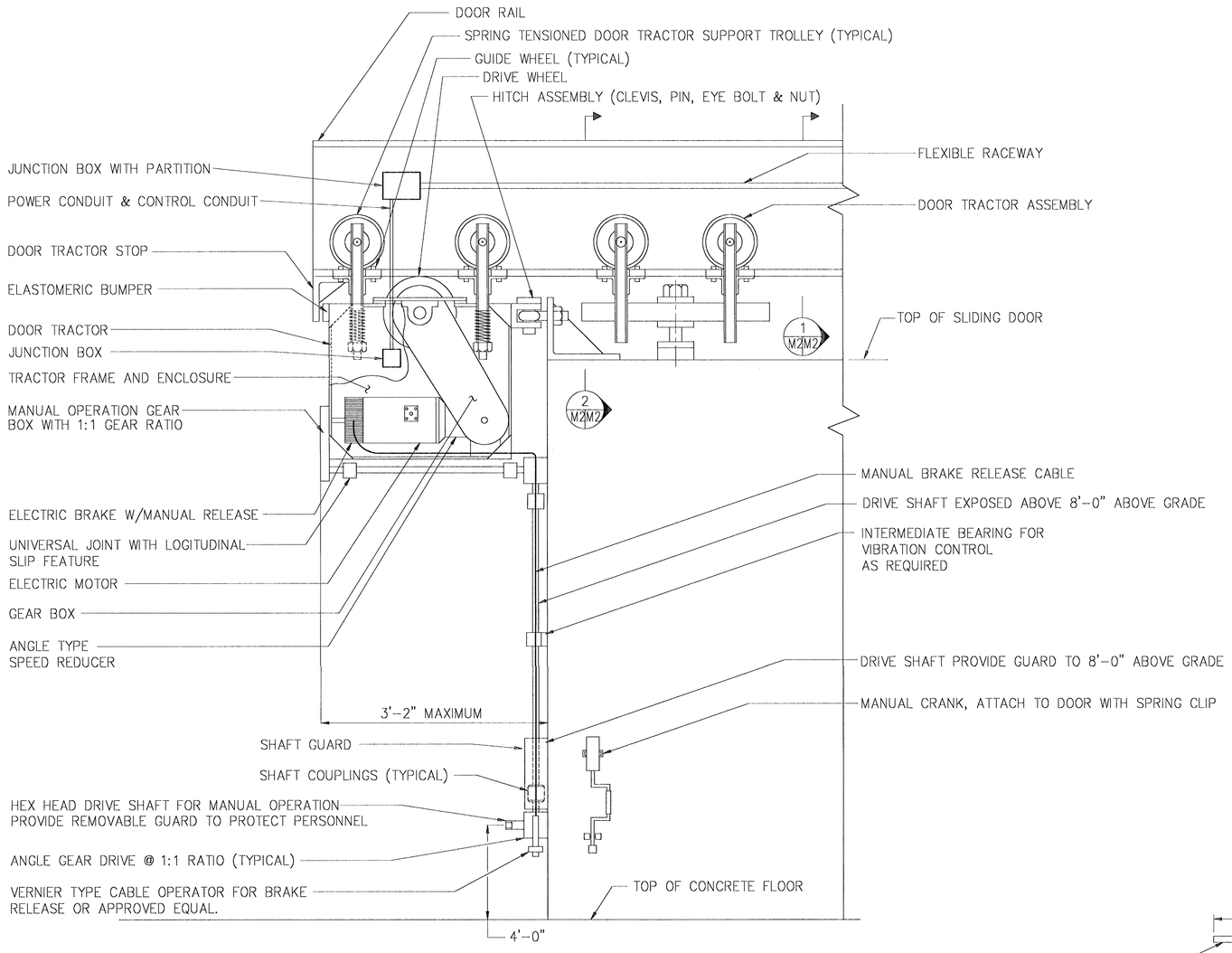

DETAIL 1 M1 M2
SCALE: NTS

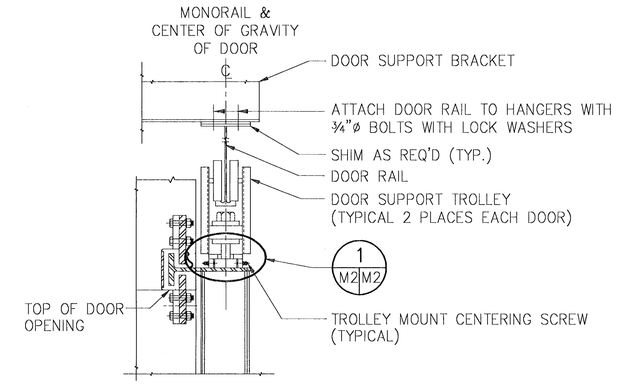

SECTION 2 M2 M2
SCALE: NTS

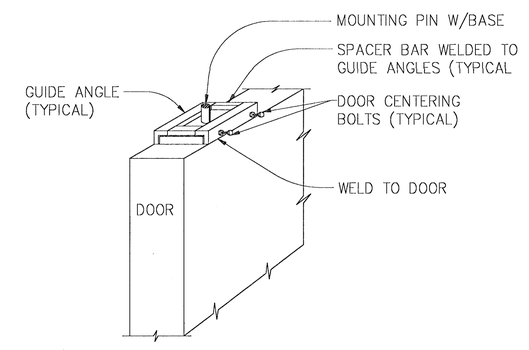

DETAIL 1 M2 M2
SCALE: NTS

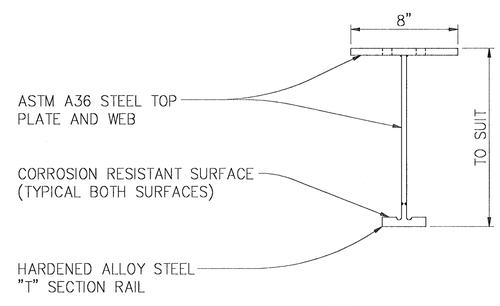

SECTION 1 M2 M2
SCALE: NTS

IF SHEET IS LESS THAN (22" x 34") IT IS A REDUCED PRINT – SCALE REDUCED ACCORDINGLY

NOTES:

1. USE DOOR CENTERING BOLTS TO POSITION THE TROLLEY PIN & BASE FOR A BALANCED DOOR.
2. WELD TROLLEY MOUNTING BASE TO GUIDE ANGLES AND SPACER BARS AFTER BALANCING DOOR.
3. CONTRACTOR MAY SUBMIT ALTERNATE TROLLEYS & MOUNTS FOR APPROVAL.

SYMBOL	DESCRIPTION	PREP'D BY	DATE	APPROVED

REVISIONS

AMMANN & WHITNEY
CONSULTING ENGINEERS
99 MADISON ST., NEW YORK, NY 10014

PRINCIPAL (PARTNER) — DATE 27/5/97
ENGINEER IN CHARGE — BRANCH MANAGER
CRITERIA MANAGER — DIVISION DIRECTOR
NAVFACENGCOM
FIRE PROTECTION ENGINEER — DATE
CRITERIA MANAGER — DATE
APPROVED — DATE
FOR COMMANDER NAVFACENGCOM

SATISFACTORY TO
TITLE — DATE

DEPARTMENT OF THE NAVY — WASHINGTON, D.C. 20350

NAVAL FACILITIES ENGINEERING COMMAND

STANDARD DRAWING

STANDARD BOX MAGAZINE TYPE 'F'

SLIDING DOOR TRACTOR AND DOOR MOUNTING DETAILS

SIZE	CODE IDENT NO	NAVFAC DRAWING NUMBER	
D	80091	6,448,614	M-2
SCALE 1/8"=1'-0"	CONTRACT NO		SHEET 26 OF 33
CATEGORY CODE	SPEC NO		

FILE NO. STFM2.DWG

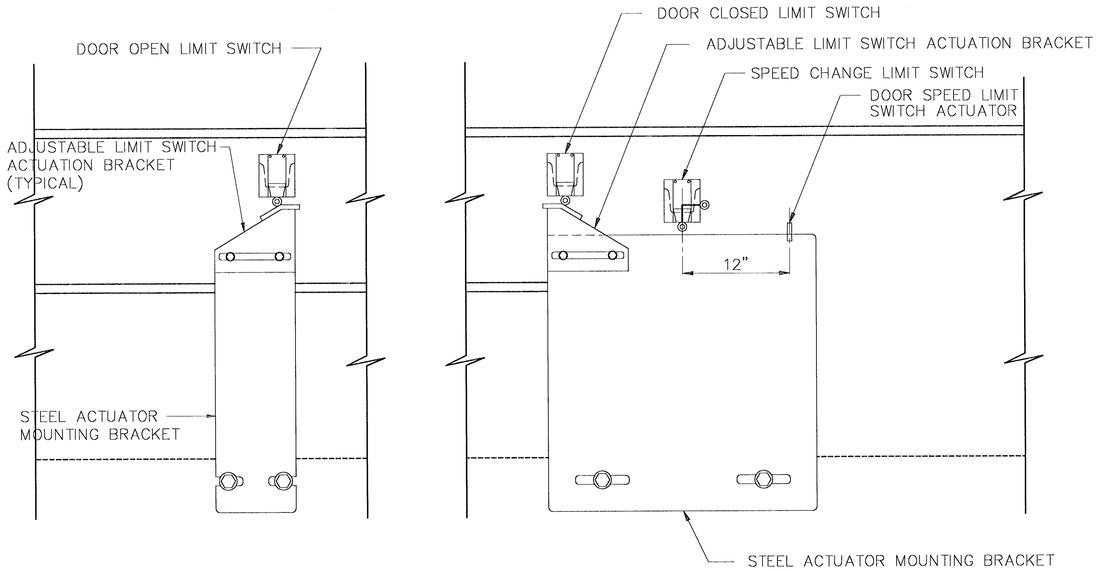

DETAIL 2 M1 M3
SCALE: NTS

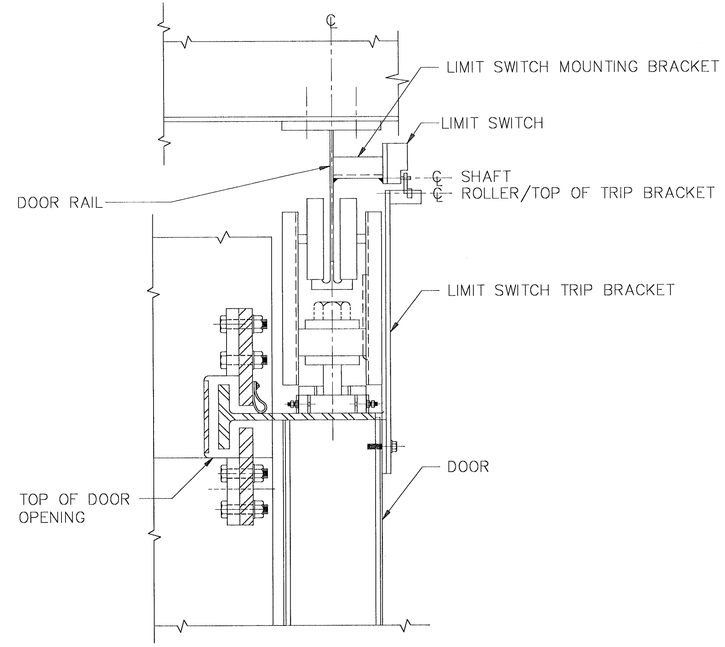

DETAIL 1 M3 M3
SCALE: NTS

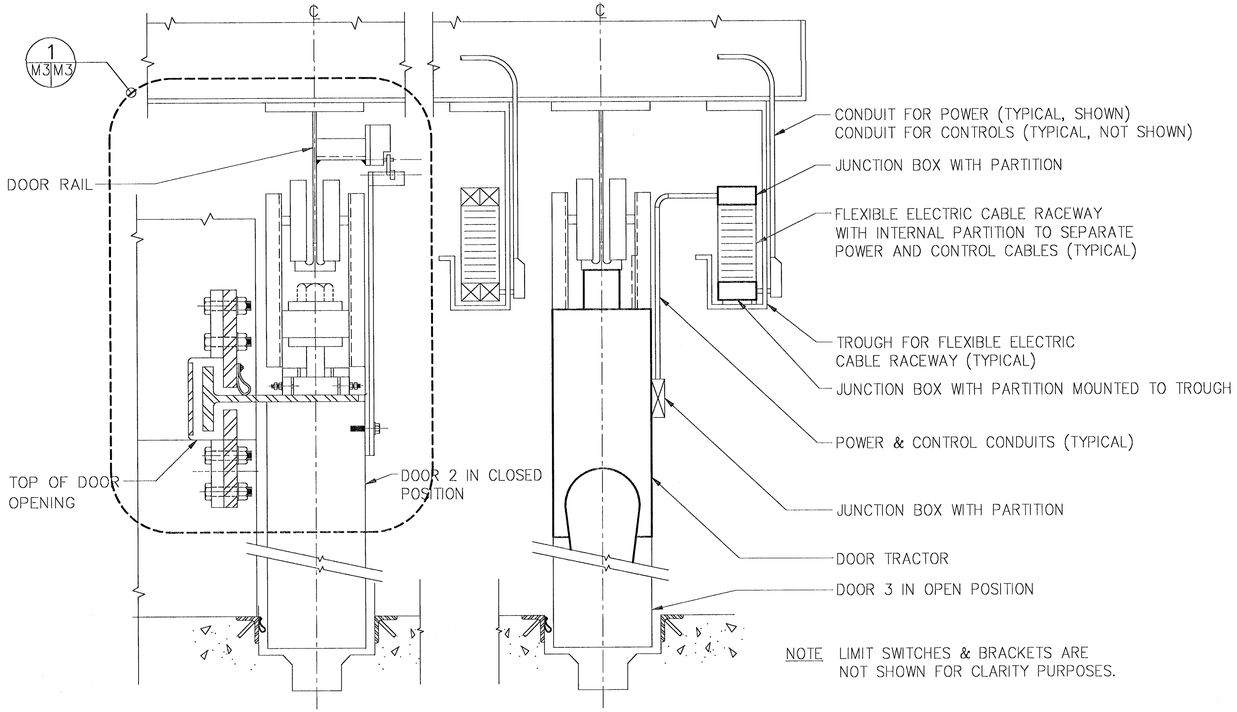

NOTE LIMIT SWITCHES & BRACKETS ARE NOT SHOWN FOR CLARITY PURPOSES.

SECTION 1 M1 M3
SCALE: NTS

IF SHEET IS LESS THAN (22" x 34") IT IS A REDUCED PRINT – SCALE REDUCED ACCORDINGLY

SYMBOL	DESCRIPTION	PREP'D BY	DATE	APPROVED

REVISIONS

AMMANN & WHITNEY
CONSULTING ENGINEERS
96 MORTON ST., NEW YORK, NY 10014

PRINCIPAL (PARTNER) — DATE 27/5/97
ENGINEER IN CHARGE — BRANCH MANAGER
CRITERIA MANAGER — DIVISION DIRECTOR
NAVFACENGCOM
FIRE PROTECTION ENGINEER — DATE
CRITERIA MANAGER — DATE
APPROVED — DATE
FOR COMMANDER NAVFACENGCOM

SATISFACTORY TO
TITLE — DATE

DEPARTMENT OF THE NAVY — WASHINGTON, D.C. 20350

NAVAL FACILITIES ENGINEERING COMMAND

STANDARD DRAWING

STANDARD BOX MAGAZINE TYPE 'F'

SLIDING DOOR POWER AND CONTROL EQUIPMENT DETAILS

SIZE	CODE IDENT NO	NAVFAC DRAWING NUMBER	
D	80091	6,448,615	M-3
SCALE 1/8"=1'-0"		CONTRACT NO	SHEET 27 OF 33
CATEGORY CODE		SPEC NO	

FILE NO. STFM3.DWG

ELECTRICAL LEGEND AND ABBREVIATIONS

ELECTRICAL LEGEND:

- A — 100W FLUORESCENT LIGHT FIXTURE FOR HAZADOUS LOCATIONS (SURFACE MOUNTED)
- B — 250W HPS OUTDOOR LIGHT FIXTURE (WALL MOUNTED FLOODLIGHT)
- 20A, 125V, 2P, 3W GROUNDING TYPE DUPLEX RECEPTACLE MTD 1'-6" AFF
- MAIN TELEPHONE ID, FA TERMINAL CABINET IN A NEMA 4X ENCLOSURE
- 277/480V, 3ø, 4W POWER PANEL IN A NEMA 4X ENCLOSURE
- 120/208V, 3ø, 4W LIGHTING PANEL IN A NEMA 4X ENCLOSURE
- T — 15KVA, 480-120/208V, 3ø, 4W STEP DOWN TRANSFORMER IN A NEMA 4X ENCLOSURE
- EXPOSED GALVANIZED RIGID STEEL CONDUIT-3/4"C MINIMUM. HASH MARKS INDICATE # OF WIRES. LONG HASH INDICATES NEUTRAL. #12 AWG WIRE MINIMUM.
- BURIED IN EARTH OR CONCEALED IN CONCRETE – GALVANIZED RIGID STEEL CONDUIT (3/4"C MINIMUM)
- HOMERUN TO PANEL (3/4"C MINIMUM)
- S — 20A,125V 1P LIGHT SWITCH FOR HAZADOUS LOCATION MTD. 3'-6" AFF.
- M — DOOR OPERATOR TYPE AND LOCATION AS REQUIRED BY DOOR MANUFACTURER
- 600V, 30A, 3P SAFETY DISCONNECT SWITCH
- EXP — DOOR CONTROL PUSHBUTTON STATION FOR HAZADOUS LOCATION MTD +4'-0"
- DOOR CONTROL PUSHBUTTON STATION-NEMA 4X ENCLOSURE MTD 4'-0"
- L — LIMIT SWITCH, TYPE AND LOCATION AS REQUIRED BY DOOR MANUFACTURER
- SURFACE MOUNTED TELEPHONE OUTLET BOX WITH GASKETED COVER MTD. 1'-6" AFF.
- COPPER GROUND BUS – 3" WIDE X 3'-0" LONG X 1/2" DEEP
- J — JUNCTION BOX.
- COPPER AIR TERMINAL 5/8" X 24" LONG
- COPPER WELD SECTIONAL GROUND ROD 3/4" DIAMETER X 10'x0" LONG.
- EXOTHERMIC WELD
- BARE COPPER GROUND CABLE #2/0 AWG
- G — GROUND REEL-SPRING DRIVEN AUTOMATIC RETRIEVAL WITH 50' 1/C #2AWG COPPER CABLE

ABBREVIATIONS:

AFF	ABOVE FINISHED FLOOR
AFG	ABOVE FINISHED GRADE
AWG	AMERICAN WIRE GAGE
AF	AMP FRAME OR AMP FUSE
AT	AMP TRIP
ATS	AUTOMATIC TRANSFER SWITCH
AMP OR A(S)	AMPERE(S)
AS	AMP SWITCH
APPROX	APPROXIMATELY
BLDG.	BUILDING
C.B.	CIRCUIT BREAKER
C	CONDUIT
CKT OR CIR.	CIRCUIT
COMM	COMMUNICATION
℄	CENTERLINE
D	DEEP
DIST.	DISTRIBUTION
DWG.	DRAWING
E	EMERGENCY
EC	EMPTY CONDUIT
ELECT.	ELECTRICAL
EMERG.	EMERGENCY
EWC	ELECTRIC WATER COOLER
E & S	EYE WASH & SHOWER
EXH	EXHAUST
EXIST.	EXISTING
EXP	EXPLOSION-PROOF FOR HAZADOUS LOCATION
FACP	FIRE ALARM CONTROL PANEL
FDR(S)	FEEDER(S)
FLUOR.	FLUORESCENT
F.A.	FIRE ALARM
GFP	GROUND FAULT PROTECTION
GRS	GALVANIZED RIGID STEEL
GFI	GROUND FAULT INTERRUPTER
HOA	HAND-OFF-AUTOMATIC
HT.	HEIGHT
HZ	HERTZ
HID	HIGH INTENSITY DISCHARGE
H.P.S.	HIGH PRESSURE SODIUM
H	HIGH
HP	HORSEPOWER
ID	INTRUSION DETECTION
INCAND.	INCANDESCENT
JB	JUNCTION BOX
KW	KILOWATT
KWH	KILOWATT-HOUR
KV	KILOVOLT
KVA	KILOVOLT AMPERE
LTG.	LIGHTING
LP	LIGHTING PANEL
MAX	MAXIMUM
MECH.	MECHANICAL
MCB	MAIN CIRCUIT BREAKER
MCC	MOTOR CONTROL CENTER
MTD	MOUNTED
MG OR M/G	MOTOR/GENERATOR SET
MIN	MINIMUM
MTG	MOUNTING
NEC	NATIONAL ELECTRICAL CODE
N	NORMAL
NON-AUTO	NON-AUTOMATIC
NF	NON-FUSED
NC OR N.C.	NORMALLY CLOSED
NO OR N.O.	NORMALLY OPEN
NIC	NOT IN CONTRACT
N.T.S.	NOT TO SCALE
O.C.	ON CENTER
PNL.	PANEL
?	PHASE OR DIAMETER
PLATF.	PLATFORM
P	POLE
PVC	POLY VINYL CHLORIDE
PWR	POWER
PP	POWER PANEL
PB	PULLBOX
QTY.	QUANTITY
RMS	ROOT MEAN SQUARED
RP	RECEPTACLE PANEL
R.C.	REMOTE CONTROL
S.C.	SHORT CIRCUIT
SUBSTA.	SUBSTATION
SW.	SWITCH
SWBD	SWITCHBOARD
SWGR	SWITCHGEAR
SYM	SYMMETRICAL
TRANSF.	TRANSFORMER
TEL	TELEPHONE
TYP.	TYPICAL
UL	UNDERWRITERS LABORATORY
UON	UNLESS OTHERWISE NOTED
VENT	VENTILATION
V	VOLT
WM	WATTMISER
WTR	WATER
WTR HTR	WATER HEATER
WP	WEATHERPROOF
W	WATT, WIRE OR WIDE

GENERAL NOTES:

1. THE ENTIRE ELECTRICAL INSTALLATION SHALL BE IN ACCORDANCE WITH THE LATEST EDITION OF THE NATIONAL ELECTRICAL CODE.
2. ALL INTERIOR ELECTRICAL EQUIPMENT SHALL BE IN ACCORDANCE WITH THE N.E.C. NFPA 70 REQUIREMENTS FOR HAZARDOUS LOCATIONS. EXACT TYPE OF CLASSIFICATION SHALL BE DETERMINED FOR EACH SITE.
3. PROVIDE SEAL FITTINGS AS REQUIRED BY THE NATIONAL ELECTRICAL CODE.
4. FOR DOOR CONTROLS SEE PERFORMANCE SPECIFICATIONS.
5. THE EXACT LOCATION AND TYPE OF DOOR OPERATOR, CONTROL STATION AND LIMIT SWITCHES SHALL BE ACCORDANCE WITH DOOR MANUFACTURERS REQUIREMENTS & DRAWINGS M-1, M-2 & M-3.
6. ALL ARCHITECT/ENGINEERS USING THESE DRAWINGS AS STANDARDS SHALL INCLUDE THE INTERRUPTING CURRENTS OF ALL ELECTRICAL ITEMS ON THEIR DRAWINGS.

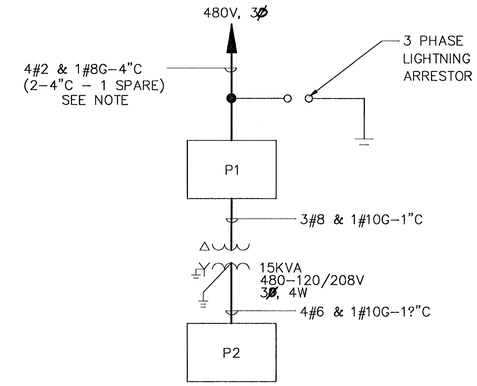

SINGLE LINE DIAGRAM

N.T.S.

NOTE-A/E TO VERIFY INCOMING POWER VOLTAGE AND CABLE SIZES. VOLTAGE DROP CALCULATIONS SHALL BE PERFORMED BASED ON SITE ADAPTED LENGTH OF CABLE RUN.

LIGHTING FIXTURE SCHEDULE

FIXTURE SYMBOL	LAMP DATA				MTG.	REMARKS
	TYPE	QUANTITY	WATTS	VOLTAGE		
A	FLUORESCENT	AS REQUIRED	100	120	SURFACE	REFER TO DRAWING E-5
B	HIGH PRESSURE SODIUM	AS REQUIRED	250	120	WALL SURFACE	REFER TO DRAWING E-5

IF SHEET IS LESS THAN (22" x 34") IT IS A REDUCED PRINT – SCALE REDUCED ACCORDINGLY

SYMBOL	DESCRIPTION	PREP'D BY	DATE	APPROVED

REVISIONS

AMMANN & WHITNEY
CONSULTING ENGINEERS
96 MORTON ST., NEW YORK, NY 10014

PRINCIPAL ENGINEER — DATE 27/5/97
ENGINEER IN CHARGE — BRANCH MANAGER
CRITERIA MANAGER — DIVISION DIRECTOR
NAVFACENGCOM
FIRE PROTECTION ENGINEER — DATE
CRITERIA MANAGER — DATE
APPROVED — DATE
FOR COMMANDER NAVFACENGCOM

SATISFACTORY TO
TITLE — DATE

DEPARTMENT OF THE NAVY — WASHINGTON, D.C. 20350

NAVAL FACILITIES ENGINEERING COMMAND

STANDARD DRAWING

STANDARD BOX MAGAZINE TYPE 'F'

LEGEND, NOTES, ABBREVIATIONS, SINGLE LINE DIAGRAM

SIZE	CODE IDENT NO	NAVFAC DRAWING NUMBER	
D	80091	6,448,616	E-1
SCALE AS NOTED		CONTRACT NO	SHEET 28 OF 33
CATEGORY CODE		SPEC NO	

FILE NO. STFE1.DWG

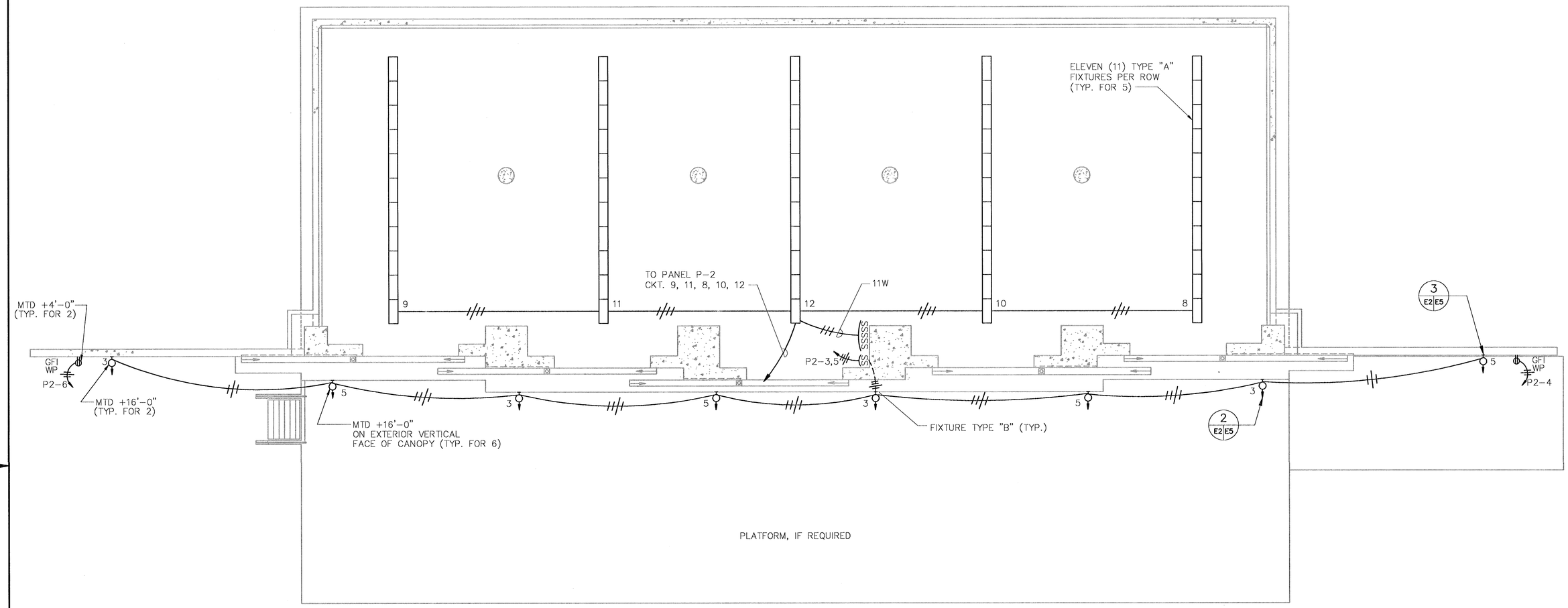

FLOOR PLAN

SCALE: 1/8" = 1'-0"

NOTE:
ALL INTERIOR ELECTRICAL EQUIPMENT AND SYSTEMS SHALL BE FOR HAZADOUS LOCATIONS.

IF SHEET IS LESS THAN (22" x 34") IT IS A REDUCED PRINT – SCALE REDUCED ACCORDINGLY

4' 0 10' 20'

1/8" = 1'-0"

SYMBOL	DESCRIPTION	PREP'D BY	DATE	APPROVED

REVISIONS

AMMANN & WHITNEY
CONSULTING ENGINEERS
99 WORTH ST., NEW YORK, NY 10014

27/5/97

PRINCIPAL (OWNER) — DATE

ENGINEER IN CHARGE — DIVISION MANAGER

CRITERIA MANAGER — DIVISION DIRECTOR

NAVFACENGCOM

FIRE PROTECTION ENGINEER — DATE

CRITERIA MANAGER — DATE

APPROVED — DATE

FOR COMMANDER NAVFACENGCOM

SATISFACTORY TO

TITLE — DATE

DEPARTMENT OF THE NAVY — WASHINGTON, D.C. 20350

NAVAL FACILITIES ENGINEERING COMMAND

STANDARD DRAWING

STANDARD BOX MAGAZINE TYPE 'F'

LIGHTING AND RECEPTACLES PLAN

SIZE	CODE IDENT NO	NAVFAC DRAWING NUMBER	
D	80091	6,448,617	E-2
SCALE AS NOTED	CONTRACT NO		SHEET 29 OF 33
CATEGORY CODE	SPEC NO		

FILE NO. STFE2.DWG

NOTES:

1. FOR DOOR WIRING DIAGRAMS SEE SCHEMATIC DIAGRAM.
2. DOOR CONTROL PUSHBUTTON STATION SHALL BE MOUNTED 4'-0" ABOVE PLATFORM.
3. THE EXACT LOCATION AND TYPE OF DOOR OPERATOR AND LIMIT SWITCHES SHALL BE IN ACCORDANCE WITH DOOR MANUFACTURERS REQUIREMENTS.

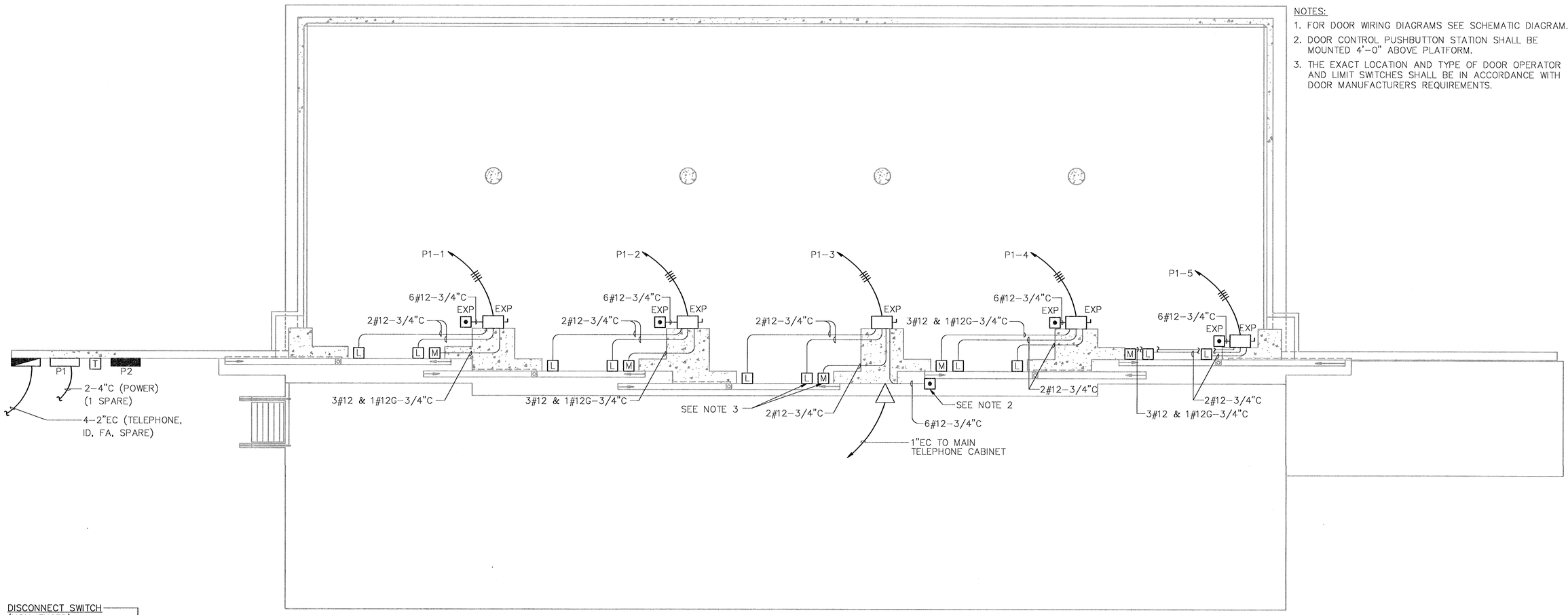

FLOOR PLAN

SCALE: 1/8"=1'-0"

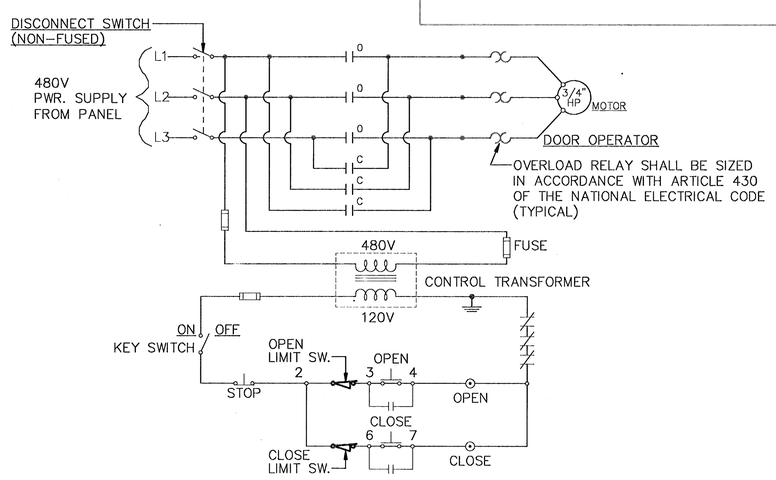

SLIDING DOOR SCHEMATIC DIAGRAM

ACTUAL INSTALLATION SHALL BE SITE ADAPTED AND COORDINATED WITH MANUFACTURER AND SHOP DRAWINGS.

IF SHEET IS LESS THAN (22" x 34") IT IS A REDUCED PRINT – SCALE REDUCED ACCORDINGLY

4' 0 10' 20'

1/8" = 1'-0"

SYMBOL	DESCRIPTION	PREP'D BY	DATE	APPROVED

REVISIONS

AMMANN & WHITNEY
CONSULTING ENGINEERS
96 MORTON ST., NEW YORK, NY 10014

PRINCIPAL (PARTNER) — DATE 27/5/97
ENGINEER IN CHARGE — BRANCH MANAGER
CRITERIA MANAGER — DIVISION DIRECTOR
NAVFACENGCOM
FIRE PROTECTION ENGINEER — DATE
CRITERIA MANAGER — DATE
APPROVED — DATE
FOR COMMANDER NAVFACENGCOM

SATISFACTORY TO
TITLE — DATE

DEPARTMENT OF THE NAVY — WASHINGTON, D.C. 20350

NAVAL FACILITIES ENGINEERING COMMAND

STANDARD DRAWING

STANDARD BOX MAGAZINE TYPE 'F'

POWER AND AUXILIARY SYSTEM PLAN

SIZE	CODE IDENT NO	NAVFAC DRAWING NUMBER	
D	80091	6,448,618	E-3
SCALE AS NOTED		CONTRACT NO	SHEET 30 OF 33
CATEGORY CODE		SPEC NO	

FILE NO. STFE3.DWG

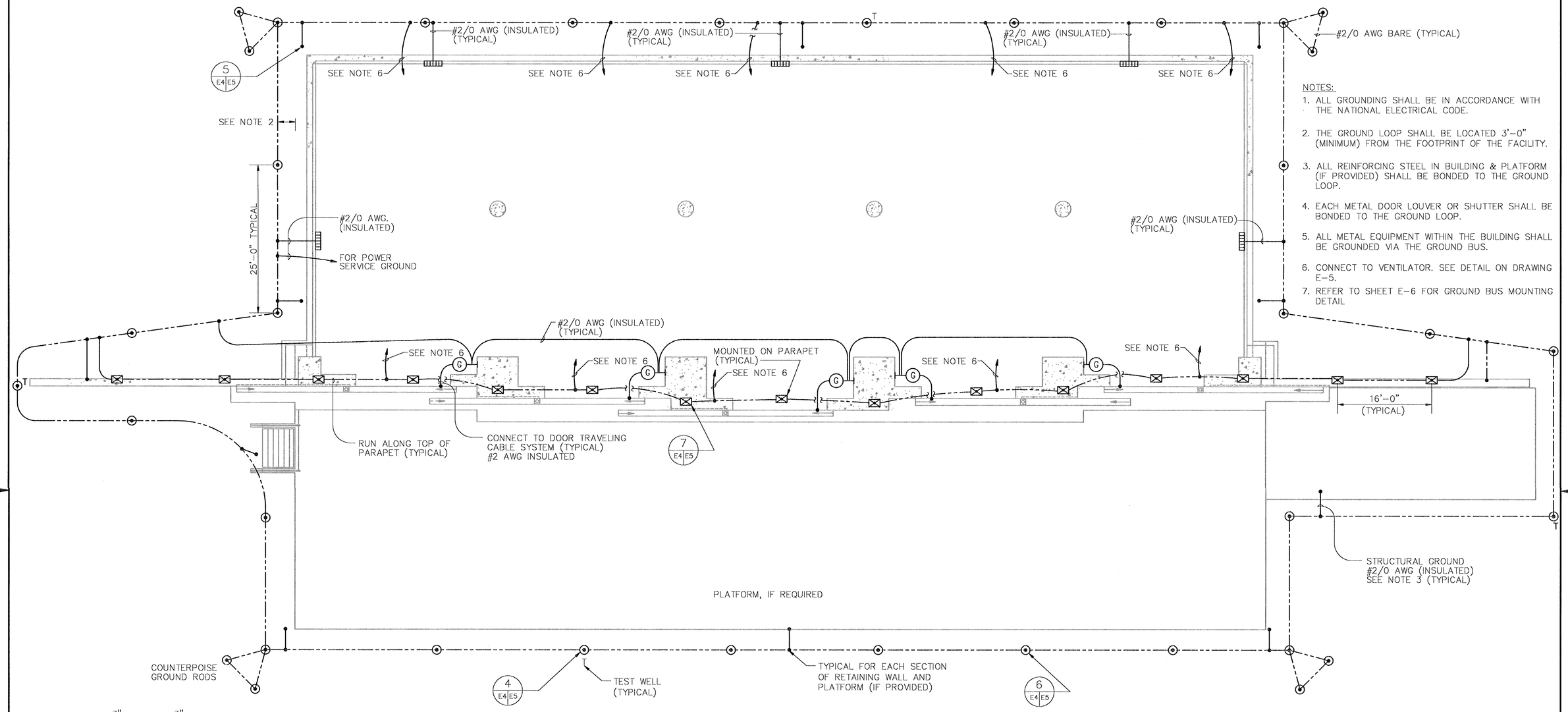

NOTES:

1. ALL GROUNDING SHALL BE IN ACCORDANCE WITH THE NATIONAL ELECTRICAL CODE.
2. THE GROUND LOOP SHALL BE LOCATED 3'-0" (MINIMUM) FROM THE FOOTPRINT OF THE FACILITY.
3. ALL REINFORCING STEEL IN BUILDING & PLATFORM (IF PROVIDED) SHALL BE BONDED TO THE GROUND LOOP.
4. EACH METAL DOOR LOUVER OR SHUTTER SHALL BE BONDED TO THE GROUND LOOP.
5. ALL METAL EQUIPMENT WITHIN THE BUILDING SHALL BE GROUNDED VIA THE GROUND BUS.
6. CONNECT TO VENTILATOR. SEE DETAIL ON DRAWING E-5.
7. REFER TO SHEET E-6 FOR GROUND BUS MOUNTING DETAIL

FLOOR PLAN

SCALE: 1/8"=1'-0"

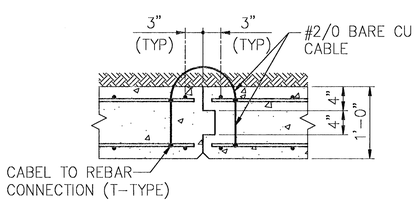

TYPICAL AT EACH CONSTRUCTION JOINT IN PLATFORM RETAINING WALL

N.T.S.

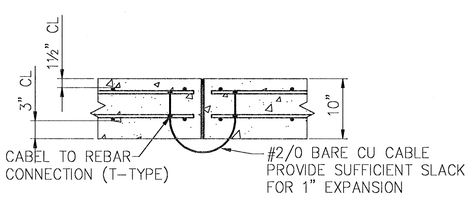

TYPICAL AT EACH EXPANSION JOINT INPLATFORM SLAB-ON-GRADE

N.T.S.

EACH PLATFORM (WHERE PROVIDE) PANEL ALONG EXTERIOR BLDG WALL SHALL BE BONDED TO PANEL (10) ALONG PLATFORM EDGE. ADJACENT EDGE PANELS SHALL BE BONDED AND EVERY SECOND PANEL (10 TOTAL) SHALL BE BONDED TO GROUND LOOP. ADJACENT RETAINING WALL SECTION SHALL BE BONDED ACROSS CONSTRUCTION JOINT AND EVERY SECOND PANEL SHALL BE BONDED TO GROUND LOOP.

IF SHEET IS LESS THAN (22" x 34") IT IS A REDUCED PRINT - SCALE REDUCED ACCORDINGLY

4' 0 10' 20'

1/8" = 1'-0"

SYMBOL	DESCRIPTION	PREP'D BY	DATE	APPROVED

REVISIONS

AMMANN & WHITNEY
CONSULTING ENGINEERS
96 MORTON ST., NEW YORK, NY 10014

PRINCIPAL ENGINEER — DATE 27/5/97
ENGINEER IN CHARGE — BRANCH MANAGER
CRITERIA MANAGER — DIVISION DIRECTOR
NAVFACENGCOM
FIRE PROTECTION ENGINEER — DATE
CRITERIA MANAGER — DATE
APPROVED — DATE
FOR COMMANDER NAVFACENGCOM

SATISFACTORY TO
TITLE — DATE

DEPARTMENT OF THE NAVY — WASHINGTON, D.C. 20350

NAVAL FACILITIES ENGINEERING COMMAND

STANDARD DRAWING

STANDARD BOX MAGAZINE TYPE 'F'

LIGHTNING PROTECTION AND GROUNDING PLAN

SIZE	CODE IDENT NO	NAVFAC DRAWING NUMBER	
D	80091	6,448,619	E-4
SCALE AS NOTED		CONTRACT NO	SHEET 31
CATEGORY CODE		SPEC NO	OF 33

FILE NO. STFE4.DWG

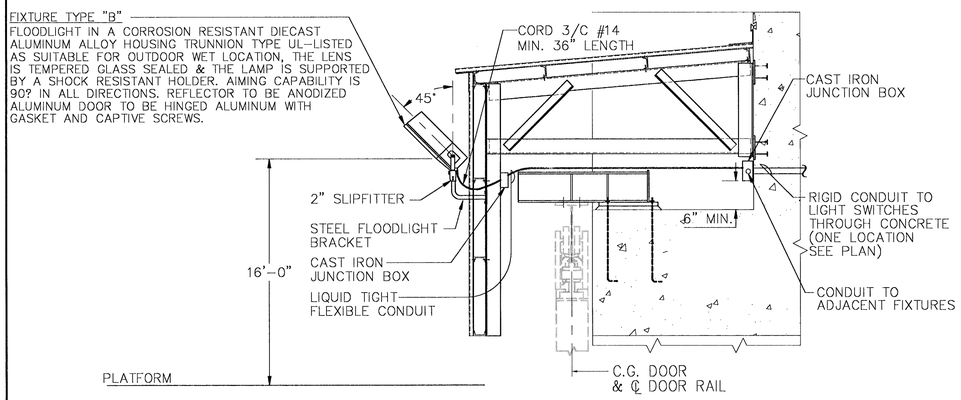

EXTERIOR FLOODLIGHT DETAIL

DETAIL 2 (E2|E5)
SCALE: N.T.S.

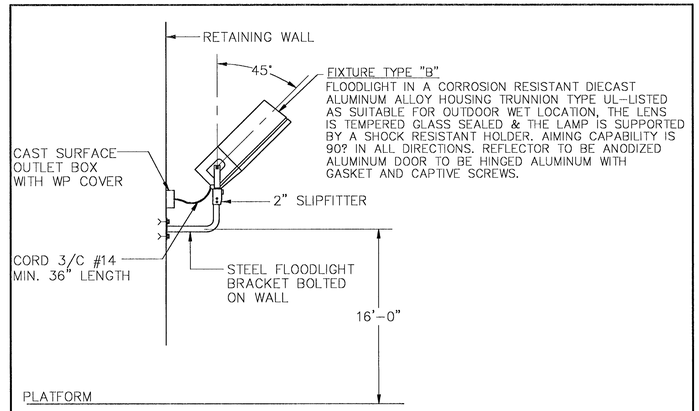

EXTERIOR FLOODLIGHT DETAIL

DETAIL 3 (E2|E5)
SCALE: N.T.S.

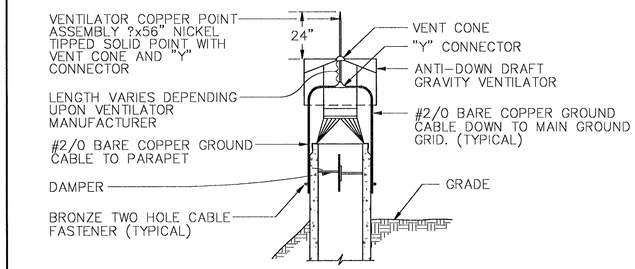

TYPICAL VENTILATOR DETAIL
N.T.S.

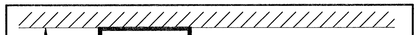

NOTES:
1. LUMINARE SHALL MEET UL844 OR FACTORY MUTUAL STANDARD FOR HAZADOUS LOCATIONS.
2. LUMINARE SHALL HAVE
   a) LOW TEMPERATURE BALLASTS, 34 WATT LAMPS AND 120V OPERATING VOLTAGE.
   b) TWO HEAVY DUTY IMPACT RESISTANT GLASS LAMP TUBES.
   c) FACTORY WIRED, ASSEMBLED AND SEALED.
   d) STAINLESS STEEL WIRE GUARD.
   e) HIGH STRENGTH COPPER FREE ALUMINIUM ALLOY CASTING.
   f) EXTRUDED ALUMINUM REFLECTOR WITH WHITE ACRYLIC FINISH.

INTERIOR LIGHTING FIXTURE TYPE "A"

DETAIL 1 (E2|E5)
SCALE: N.T.S.

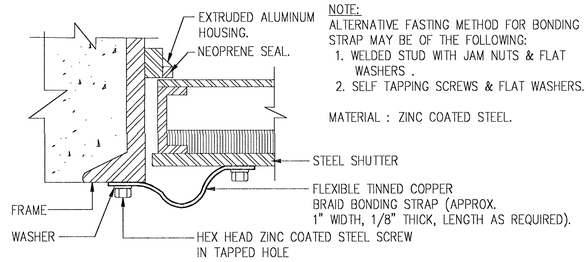

NOTE:
ALTERNATIVE FASTING METHOD FOR BONDING STRAP MAY BE OF THE FOLLOWING:
1. WELDED STUD WITH JAM NUTS & FLAT WASHERS .
2. SELF TAPPING SCREWS & FLAT WASHERS.

MATERIAL : ZINC COATED STEEL.

METHOD FOR BONDING SHUTTER TO FRAME
N.T.S.

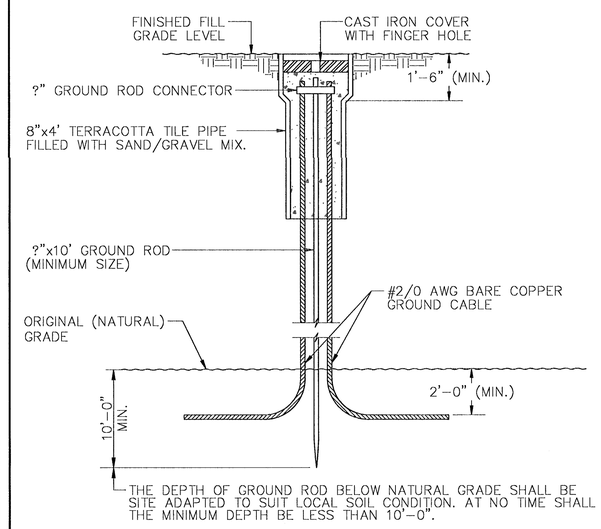

GROUND ROD INSTALLATION IN EARTH FILL

DETAIL 6 (E4|E5)
SCALE: N.T.S.

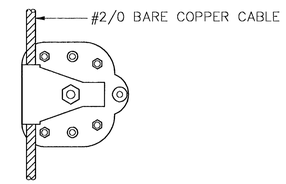

SECTION A (E5|E5)
SCALE: N.T.S.

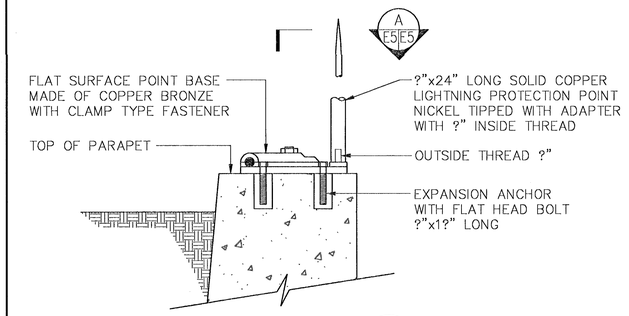

DETAIL 7 (E4|E5)
SCALE: N.T.S.

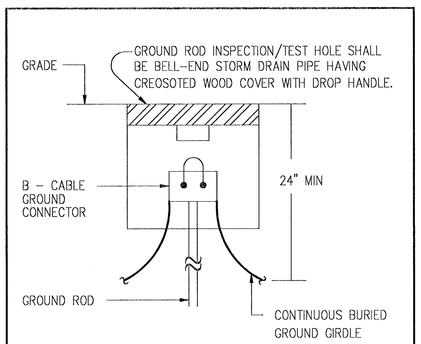

TYPICAL TEST WELL

DETAIL 4 (E4|E5)
SCALE: N.T.S.

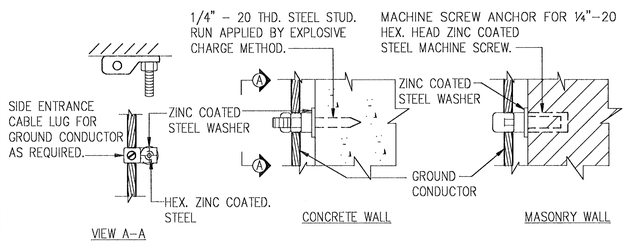

METHOD FOR SUPPORTING GROUND CONDUCTORS ON WALLS
N.T.S.

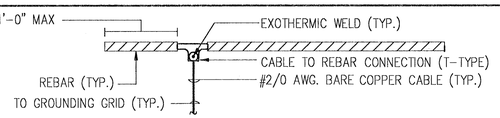

METHOD FOR GROUNDING OF REINFORCING STEEL

DETAIL 5 (E4|E5)
SCALE: N.T.S.

IF SHEET IS LESS THAN (22" x 34") IT IS A REDUCED PRINT - SCALE REDUCED ACCORDINGLY

SYMBOL	DESCRIPTION	PREP'D BY	DATE	APPROVED

REVISIONS

AMMANN & WHITNEY
CONSULTING ENGINEERS
96 MORTON ST., NEW YORK, NY 10014

PRINCIPAL DRAFTSMAN — DATE 27/5/97
ENGINEER IN CHARGE — BRANCH MANAGER
CRITERIA MANAGER — DIVISION DIRECTOR
NAVFACENGCOM
FIRE PROTECTION ENGINEER — DATE
CRITERIA MANAGER — DATE
APPROVED — DATE
FOR COMMANDER NAVFACENGCOM

SATISFACTORY TO
TITLE — DATE

DEPARTMENT OF THE NAVY — WASHINGTON, D.C. 20350

NAVAL FACILITIES ENGINEERING COMMAND

STANDARD DRAWING

STANDARD BOX MAGAZINE TYPE 'F'

ELECTRICAL DETAILS

SIZE	CODE IDENT NO	NAVFAC DRAWING NUMBER	
D	80091	6,448,620	E-5
SCALE AS NOTED	CONTRACT NO		SHEET 32 OF 33
CATEGORY CODE	SPEC NO		

FILE NO. STFE5.DWG

POWER PANEL P1 SCHEDULE

PROVIDE 90A, MCB.

277/480 VOLT 3 PHASE 4 WIRE SN. 100 A.BUS AND ____ GND. BUS

LUG LOCATION _____ CABINET _____ MIN. S.C. _____ A.SYM.

CIR. NO.	DESCRIPTION OF LOAD	AMPS	KW.	H.P.	CIRCUIT BREAKER FRAME SIZE	CIRCUIT BREAKER TRIP SIZE	CIRCUIT BREAKER POLES	REMARKS
1	DOOR #1	4.8		3	100	20	3	
2	DOOR #2	4.8		3	100	20	3	
3	DOOR #3	4.8		3	100	20	3	
4	DOOR #4	4.8		3	100	20	3	
5	DOOR #5	4.8		3	100	20	3	
6	15 KVA XFMR.	18.1	15		100	25	3	
7	SPARE				100	20	3	
8	SPARE				100	20	3	
9	SPARE				100	20	3	
10	SPARE				100	20	3	

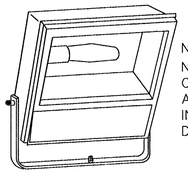

NOTE:
NEMA BEAM SPREAD CONFIGURATION SHALL BE AS SPECIFIED AND SHALL BE IN ACCORDANCE WITH I.E.S. DEFINITIONS.

LUMINAIRE REQUIREMENTS

1. HOUSING – DIE CAST ALUMINUM.
2. REFLECTOR – ANODIZED OR ALZAK ALUMINUM.
3. DOOR – HINGED ALUMINUM, WITH GASKET AND CAPTIVE SCREWS.
4. INTEGRAL MULTI-TAP BALLAST.
5. STAINLESS STEEL OR NONCORROSIVE HARDWARE.
6. PORCELAIN SOCKET.
7. MINIMUM 36" 3/C #14 "SO" CORD.
8. UL "WET LABEL"

FIXTURE TYPE "B"
FLOODLIGHT DETAIL

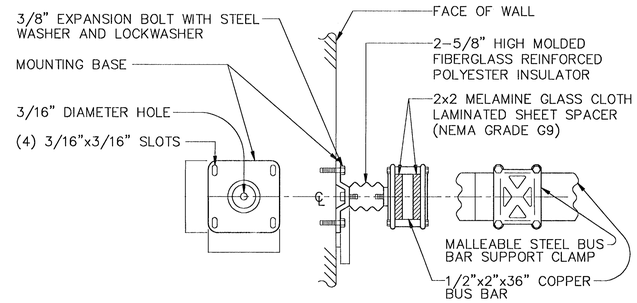

TYPICAL GROUND BUS BAR MOUNTING DETAIL
TWO (2) CLAMPS REQUIRED PER BUS BAR

LIGHTING PANEL NO. P2 120/208 V. 3ø 4 W + GRD _____ A. SYM.I.C.

MAINS 100 AMPS. MAINBREAKER 100 AMPS.

LOCATION OR DESCRIPTION	LOAD IN WATTS	CKT BKR AMP	CKT NO.	CKT NO.	CKT BKR AMP	LOAD IN WATTS	LOCATION OR DESCRIPTION
SPARE		20	1	2	20		SPARE
EXT. LIGHTING	1200	20	3	4	20	200	EXT. RECEPTS.
EXT. LIGHTING	1200	20	5	6	20	200	EXT. RECEPTS.
SPARE		20	7	8	20	1100	INT. LIGHTING
INT. LIGHTING	1100	20	9	10	20	1100	INT. LIGHTING
INT. LIGHTING	1100	20	11	12	20	1100	INT. LIGHTING

IF SHEET IS LESS THAN (22" x 34") IT IS A REDUCED PRINT – SCALE REDUCED ACCORDINGLY

4' 0 10' 20'
1/8" = 1'-0"

SATISFACTORY TO
TITLE DATE

SYMBOL	DESCRIPTION	PREP'D BY	DATE	APPROVED

REVISIONS

AMMANN & WHITNEY
CONSULTING ENGINEERS
96 MORTON ST., NEW YORK, NY 10014

27/5/97
PRINCIPAL (OWNER) DATE
ENGINEER IN CHARGE — BRANCH MANAGER
CRITERIA MANAGER — DIVISION DIRECTOR
NAVFACENGCOM
FIRE PROTECTION ENGINEER DATE
CRITERIA MANAGER DATE
APPROVED DATE
FOR COMMANDER NAVFACENGCOM

DEPARTMENT OF THE NAVY — WASHINGTON, D.C. 20350

NAVAL FACILITIES ENGINEERING COMMAND

STANDARD DRAWING

STANDARD BOX MAGAZINE TYPE 'F'

PANEL SCHEDULES & DETAIL

SIZE	CODE IDENT NO	NAVFAC DRAWING NUMBER	
D	80091	6,448,621	E-6
SCALE AS NOTED		CONTRACT NO	SHEET 33
CATEGORY CODE		SPEC NO	OF 33

FILE NO. STDE6.DWG