INCH-POUND

MIL-HDBK-1003/17B
15 DECEMBER 1993
SUPERSEDING
MIL-HDBK 1003/17A
31 JANUARY 1991

MILITARY HANDBOOK

INDUSTRIAL VENTILATION SYSTEMS

AMSC N/A

AREA FACR

DISTRIBUTION STATEMENT A. APPROVED FOR PUBLIC RELEASE: DISTRIBUTION IS UNLIMITED.

ABSTRACT

This handbook provides the basic design guidance for industrial ventilation systems at military installations. It is intended for use by experienced architects and engineers. The first section addresses general criteria for use in all industrial ventilation systems. Other sections include ventilation design data for specific processes, including asbestos delagging, torpedo maintenance, metal cleaning and electroplating, fiberglass reinforced plastic repair and lay up, abrasive blasting, spray coating, foundry operations and woodworking.

FOREWORD

This military handbook was developed from an evaluation of facilities in the Shore Establishment, from surveys of the availability of new materials and construction methods, and from selection of the best design practices of the Naval Facilities Engineering Command (NAVFACENGCOM), other government agencies, and the private sector. It uses, to the maximum extent feasible, national professional society, association, and institute standards. Deviations from these criteria, in planning, engineering, design, and construction of Naval shore facilities, cannot be made without prior approval of NAVFACENGCOMHQ Code 04.

Design cannot remain static any more than the functions it serves or the technologies it uses. Accordingly, recommendations for improvement are encouraged and should be furnished to Commanding Officer (Code 431), Naval Facilities Engineering Service Center, Port Hueneme, CA 93043-4328; telephone (805) 982-4984.

THIS HANDBOOK SHALL NOT BE USED AS A REFERENCE DOCUMENT FOR PROCUREMENT OF FACILITIES CONSTRUCTION. IT IS TO BE USED IN THE PURCHASE OF FACILITIES ENGINEERING STUDIES AND DESIGNS (FINAL PLANS, SPECIFICATIONS, AND COST ESTIMATES). DO NOT REFERENCE IT IN MILITARY OR FEDERAL SPECIFICATIONS OR OTHER PROCUREMENT DOCUMENTS.

MECHANICAL ENGINEERING CRITERIA MANUALS

Document Number	Title	Preparing Activity
DM-3.01	Plumbing Systems	WESTDIV
MIL-HDBK-1003/2	Incinerators	WESTDIV
DM-3.03	Heating, Ventilating, Air Conditioning and Dehumidifying Systems	WESTDIV
DM-3.4	Refrigeration Systems for Cold Storage	WESTDIV
DM-3.5	Compressed Air and Vacuum Systems	WESTDIV
MIL-HDBK-1003/6	Central Heating Plants	NEESA
MIL-HDBK-1003/7	Steam Power Plants - Fossil Fueled	NEESA
MIL-HDBK-1003/8A	Exterior Distribution of Steam, High Temperature Water, Chilled Water, Natural Gas, and Compressed Air	WESTDIV
DM- 3.09	Elevators, Escalators, Dumbwaiters, Access Lifts, and Pneumatic Tube Systems	WESTDIV
DM-3.10	Noise and Vibration Control for Mechanical Equipment (Tri-Service)	ARMY
MIL-HDBK-1003/11	Diesel Electric Generating Plants	WESTDIV
MIL-HDBK-1003/12	Boiler Controls	NEESA
MIL-HDBK-1003/13	Solar Heating of Buildings and Domestic Hot Water	NCEL
DM-3.14	Power Plant Acoustics (Tri-Service)	ARMY
MIL-HDBK-1003/15	Air Pollution Control Systems for Boilers and Incinerators (Tri-Service)	ARMY
MIL-HDBK-1003/17	Industrial Ventilation Systems	NEESA
MIL-HDBK-1003/19	Design Procedures for Passive Solar Buildings	NCEL

MIL-HDBK 1003/17B

INDUSTRIAL VENTILATION SYSTEMS

CONTENTS

			Page
Section	1	INTRODUCTION	
	1.1	Scope	1
	1.2	Mandatory Standards	1
	1.3	Cancellation	1
Section	2	GENERAL TECHNICAL REQUIREMENTS	
	2.1	General Design Criteria	2
	2.1.1	Coordination	2
	2.1.2	Design Procedure	2
	2.1.2.1	Step 1	2
	2.1.2.2	Step 2	2
	2.1.2.3	Step 3	2
	2.1.2.4	Step 4	3
	2.1.2.5	Step 5	3
	2.1.2.6	Step 6	3
	2.1.2.7	Step 7	3
	2.1.2.8	Step 8	3
	2.1.2.9	Step 9	3
	2.1.2.10	Step 10	4
	2.1.3	Common System Criteria	4
	2.1.3.1	Ductwork	4
	2.1.3.2	Fans	7
	2.1.3.3	Exhaust Stacks	9
	2.1.3.4	Air Pollution Control Equipment	12
	2.1.3.5	Replacement Air	12
	2.1.3.6	Controls	15
	2.1.3.7	Provision for System Testing	17
	2.1.4	Energy Conservation	19
	2.1.5	Noise Control	19
	2.1.5.1	Site Plan	19
	2.1.5.2	Specifications	19
	2.1.5.3	Architectural Design	19
	2.1.5.4	Criteria	20
Section	3	ASBESTOS DELAGGING FACILITIES	
	3.1	Function	21
	3.1.1	Design Criteria	21
	3.2	Operational Considerations	21
	3.2.1	Airborne Contamination	21
	3.2.2	Heat Stress	21
	3.2.3	Ergonomics	21
	3.3	Typical Floor Plans	22
	3.4	Exhaust Air	22
	3.4.1	Hood Design	22

Page

3.4.2 Ductwork and Fans 24
3.4.2.1 Ductwork 24
3.4.2.2 Fans 24
3.4.3 Weather Stack Design and Location 24
3.4.4 Air Cleaning Devices 25
3.4.5 Industrial Vacuum System 26
3.5 Replacement Air 28
3.5.1 Quantity and Distribution 28
3.5.2 Heating and Air Conditioning 28
3.6 System Controls 29
3.7 Safety and Health Items 29

Section 4 OTTO FUEL II FACILITIES
4.1 Function 30
4.1.1 Design Criteria 30
4.2 Operational Considerations 30
4.3 Exhaust Air 31
4.3.1 MK-46 Ventilated Spaces 31
4.3.1.1 MK-46 Standup Backdraft Hood 31
4.3.1.2 MK-46 Workbench Hood 31
4.3.1.3 MK-46 Parts Washer Hood 31
4.3.2 MK-48 Ventilated Spaces 34
4.3.2.1 MK-48 Afterbody Teardown Hood 34
4.3.2.2 MK-48 Workbench Hood 36
4.3.2.3 MK-48 Parts Washer Hood 36
4.3.2.4 Workflow in Afterbody Teardown Room & Accessories Room 37
4.3.2.5 MK-48 Refueling Hood 37
4.3.3 Ductwork and Fans 39
4.3.3.1 Ductwork 39
4.3.3.2 Fans 39
4.3.4 Weather Stack Design and Location 39
4.3.5 Air Cleaning Devices 39
4.4 Replacement Air 39
4.4.1 Quantity and Distribution 39
4.4.1.1 Vertical Distribution Method 39
4.4.1.2 Horizontal Distribution Method 40
4.4.2 Heating and Air Conditioning 40
4.5 System Controls 41
4.6 Safety and Health Items 42

Section 5 METAL CLEANING AND ELECTROPLATING
5.1 Function 43
5.1.1 Design Criteria 43
5.2 Operational Considerations 43
5.2.1 Chemical Cleaning and Electroplating 43
5.2.2 Mechanical Cleaning 43
5.3 Exhaust Systems 44

Page

5.3.1 Chemical Cleaning and Electroplating Hood Design 44
5.3.1.1 Lateral Exhaust Hoods 47
5.3.1.2 Pull-Pull Exhaust Hoods 52
5.3.1.3 Push-Pull Exhaust Hoods 52
5.3.1.4 Enclosing Hood 53
5.3.2 Buffing, Grinding, and Polishing Hoods 55
5.4 Ductwork and Fans 56
5.4.1 Metal Cleaning and Electroplating Ductwork and Fans 56
5.4.1.1 Ductwork 56
5.4.1.2 Fans 56
5.4.2 Buffing, Grinding, and Polishing Ductwork and Fans 56
5.4.2.1 Ductwork 56
5.4.2.2 Fans 57
5.5 Discharge Stack Design and Location 57
5.6 Air Cleaning Devices 57
5.6.1 Chemical Cleaning and Electroplating Air Cleaning Devices 57
5.6.1.1 Mesh Pad Mist Eliminator 57
5.6.1.2 Vertical Counterflow Wet Scrubber 60
5.6.1.3 Chevron Mist Eliminator 62
5.6.2 Air Cleaning Devices for Buffing, Grinding, and Polishing 64
5.7 Replacement Air 64
5.7.1 Heating and Cooling 64
5.8 System Controls 64

Section 6 FIBERGLASS REINFORCED PLASTIC LAY-UP AND REPAIR FACILITIES
6.1 Function 65
6.1.1 Design Criteria 65
6.2 Operational Considerations 65
6.2.1 Typical Floor Plans 65
6.2.2 Ergonomics 65
6.3 Exhaust Air 66
6.3.1 Hood Design 67
6.3.1.1 Hoods for Large or Concave Pieces 68
6.3.1.2 Spray up Booths 69
6.3.1.3 Ventilated Workbench 69
6.3.1.4 Ventilated Solvent Washdown Sink 69
6.3.2 Ductwork 71
6.3.3 Fans 72
6.3.4 Weather-Stack Design and Location 72
6.3.5 Air Cleaning Devices 72
6.3.6 Industrial Vacuum System 72
6.4 Replacement Air 75

Page

6.4.1 Quantity and Distribution 75
6.4.2 Heating and Air Conditioning 75
6.5 System Controls 75
6.6 Safety and Health Items 76
6.6.1 Respirators 76
6.6.2 Combination Emergency Eyewash and Deluge Shower . 76

Section 7 ABRASIVE BLASTING FACILITIES
7.1 Function 77
7.1.1 Design Criteria 77
7.2 Operational Considerations 77
7.2.1 Toxic Materials 77
7.3 Exhaust Air 77
7.3.1 Blasting Enclosures 78
7.3.2 Media Reclaim 81
7.3.3 Blasting Cabinets 81
7.3.4 Ductwork 82
7.3.5 Fans 82
7.3.6 Weather Stack Design and Location 83
7.3.7 Air Cleaning Devices 83
7.4 Replacement Air 84
7.4.1 Heating and Air Conditioning 84
7.5 System Controls 84
7.6 Safety and Health Items 85
7.6.1 Breathing Air 85
7.6.2 Noise 85
7.6.3 Explosiveness 85
7.6.4 Access 86

Section 8 PAINT SPRAY FACILITIES
8.1 Function 87
8.1.1 Design Criteria 87
8.2 Operational Considerations 87
8.3 Exhaust Air 88
8.3.1 Spray Area Design 88
8.3.1.1 Spray Booths 88
8.3.2 Ductwork 89
8.3.3 Fans 90
8.3.4 Weather and Stack Design and Location 90
8.3.5 Air Cleaning Devices 91
8.4 Replacement Air 91
8.4.1 Heating and Air Conditioning 91
8.5 System Controls 91
8.6 Safety and Health Items 92
8.6.1 Respiratory Protection 92

Page

Section	9	FOUNDRIES	
	9.1	Function	93
	9.1.1	Design Criteria	93
	9.2	Operational Considerations	94
	9.3	Typical Floor Plans	94
	9.4	Exhaust Air	95
	9.4.1	Hood Design	95
	9.4.1.1	Mixer/Muller	95
	9.4.1.2	Furnaces	96
	9.4.1.3	Mold Pouring Station	96
	9.4.1.4	Shakeout Unit	96
	9.4.2	Ductwork and Fans	96
	9.4.2.1	Ductwork	96
	9.4.2.2	Fans	97
	9.4.3	Weather Stack Design and Location	97
	9.4.4	Air Cleaning Devices	97
	9.4.5	Industrial Vacuum System	97
	9.5	Replacement Air	98
	9.5.1	Quantity and Distribution	98
	9.5.2	Heating and Air Conditioning	98
	9.6	System Controls	98
	9.7	Safety and Health Items	98
Section	10	WOOD SHOP FACILITIES	
	10.1	Function	99
	10.1.1	Design Criteria	99
	10.2	Health Considerations	99
	10.3	Typical Floor Plans	99
	10.4	Exhaust Air	100
	10.4.1	System Design	100
	10.4.2	Hood Design	100
	10.4.3	Ductwork	101
	10.4.4	Fans	101
	10.4.5	Weather Stack Design and Location	101
	10.4.6	Air Cleaning Devices	101
	10.4.7	Floor Sweeps	101
	10.5	Replacement Air	101
	10.5.1	Quantity and Distribution	102
	10.5.2	Heating and Air Conditioning	102
	10.6	System Controls	102
	10.7	Safety and Health Items	102

Page

APPENDICES

APPENDIX A	Design Calculation Example For Representative Metal Cleaning and Electroplating Hoods	103
APPENDIX B	Calculation For Lower Explosive Limit For Generic Styrene	112
APPENDIX C	Unit Conversion and MEC for Typical Organic Media	113
APPENDIX D	Non-Standard Air Calculations	116

FIGURES

Figure 1	Duct Elbow Design	5
2	Rectangular Elbow Design	5
3	Branch Entry Sizing to Maintain Transport Velocity	6
4	Branch Entry Orientations	6
5	Dual Branch Entry Design	7
6	Wye Connections	8
7	Stack Height Relative to Eddy Zone	10
8	Discharge Velocity and Effluent Dispersion	11
9	Exhaust Stack Designs	11
10	Decision Tree for Replacement Air Design	13
11	Plenum Design with Perforated Duct	14
12	Plenum Design Without Perforated Duct	14
13	Annunciator Panel	17
14	Testing Point Locations	18
15	Typical Delagging Facility Floor Plan	22
16	Exhaust Hood for High Profile Workpieces	23
17	Exhaust Hood for Low Profile Workpieces	24
18	Sequence of Air Cleaning Devices for Asbestos Delagging	25
19	Exhaust and Vacuum System Schematic Diagram	28
20	Typical Layout for MK-46 Fuel/Defuel and Afterbody Breakdown Room	32
21	Series of Hoods in MK-46 Shop (elevation view)	32
22	MK-46 Standup Backdraft Hood	33
23	MK-46 Workbench Hood	33
24	MK-46 Part Washer Hood	34
25	Typical MK-48 Ventilated Space Layout	35
26	MK-48 Afterbody Teardown Hood	35
27	MK-48 Workbench Hood	36
28	MK-48 Parts Washer Hood	37
29	MK-48 Sequence of Hood in Afterbody Teardown and Accessories Rooms	38
30	MK-48 Refueling Hood	38

Page

31 Vertical Distribution Method 40
32 Horizontal Distribution Method 41
33 Emergency Eyewash and Deluge Shower 42
34 Decision Process for Open Surface Tank Hoods 44
35 Air Agitator for Open Surface Tanks 45
36 Hood Optimization Features 46
37 Lateral Exhaust Hood With Upward Plenum and Transition 47
38 Lateral Exhaust Hood for Pickling Tank 48
39 Lateral Hood for Solutions With a High Vaporization Rate 48
40 Lateral Exhaust Hood With Downward Plenum 49
41 Lateral Exhaust Hood with End Takeoff 49
42 Lateral Exhaust Hood for Solvent Degreasing Tank 50
43 Enclosing Hood with Outside Monorail 54
44 Enclosing Hood with Inside Monorail 54
45 Mesh Pad Mist Eliminator 58
46 Vertical Counterflow Wet Scrubber 61
47 Chevron Mist Eliminator 63
48 Typical Floor Plan for FRP Facility 66
49 Floor Exhaust 69
50 Spraying Booth 70
51 Workbench Hood 70
52 Ventilated Sink 71
53 Exhaust System Schematic 73
54 Downdraft Blast Enclosure 79
55 Crossdraft Blast Enclosure 79
56 Flat Back Elbow 82
57 Spray Painting Booth 90
58 Typical Small Foundry Floor Plan 94
59 General Hood Design 100
60 Floor Sweep 102

TABLES

Table 1 Minimum Volumes and Vacuum Hose Size for Asbestos Operations 26
2 Minimum Capture Velocities for Lateral Exhaust Hoods in Undisturbed Air 51
3 Minimum Volume Rates Required for Lateral Hoods without Baffles 51
4 Minimum Volume Rates for Lateral Exhaust Hoods with Baffles or Against a Wall 52
5 Minimum Capture Velocities for Enclosing Hoods in Undisturbed Air 52

		Page
6	Recommended Hoods and Air Pollution Devices for FRP Operations	68
7	Minimum Volumes and Vacuum Hose Size for FRP Operations	73
8	Air Velocities for Blasting Enclosures	80
9	Minimum Maintained Velocities into Spray Booths	89
10	Minimum Explosion Concentrations for Typical Organic Media	115
REFERENCES		118

Section 1: INTRODUCTION

1.1 Scope. This handbook provides criteria for the design of industrial ventilation systems that control contaminants generated from specific industrial processes. For a specific process, use the general criteria presented in Section 2 and the criteria in the associated section to design the ventilation system. For all other ventilation applications, use the criteria in Section 2.

The specific processes addressed in this handbook are asbestos delagging, torpedo refurbishing, metal cleaning and electroplating, fiberglass reinforced plastic repair and lay up, abrasive blasting, spray painting, foundry operations, and woodworking. This handbook provides a system concept for each specific process rather than just criteria for the various components. The industry standard, the American Conference of Governmental Industrial Hygienists (ACGIH) Manual, Industrial Ventilation, A Manual of Recommended Practice, provides component criteria rather than system criteria.

1.2 Mandatory Standards. The requirements in this handbook are based on mandatory standards set forth in Title 29, Code of Federal Regulations (CFR), part 1910, Occupational Safety and Health Standards (29 CFR 1910), and the national consensus standards. This handbook does not incorporate individual state and local requirements.

It is the sole responsibility of the cognizant design personnel to design an industrial ventilation system that complies with state and local requirements. Users of this handbook are cautioned to consult the most current edition of the standards. These standards are frequently revised and updated. For this reason, the year of publication of standards and codes is omitted from this handbook. This handbook does not duplicate materials covered elsewhere in Department of Defense (DOD) criteria documents.

Applicable criteria documents are referenced for appropriate topics. Also, criteria contained in this handbook should be interpreted as the minimum required and should be improved where current technology or situation warrants.

1.3 Cancellation. This military handbook cancels and supersedes MIL-HDBK-1003/17A of 31 January 1990.

Section 2: GENERAL TECHNICAL REQUIREMENTS

2.1 General Design Criteria. 29 CFR 1910.1000(e) and Chief of Naval Operations Instruction (OPNAVINST) 5100.23, Navy Occupational Safety and Heath Program Manual require installing engineering controls as the preferred method of controlling hazardous processes. Properly designed industrial ventilation systems are the most common engineering controls.

2.1.1 Coordination. Form a project design team to direct the design of industrial ventilation projects. Include in the design team representatives from the following:

a) Cognizant industrial shop.

b) Public works office.

c) Health and safety office.

d) Cognizant Regional Engineering Office (REO) (e.g., Navy Engineering Field Division, Army Corps of Engineers Division and Air Force major command engineering office).

e) Cognizant industrial hygiene office.

f) Cognizant system command program manager (where applicable).

The REO representative shall act as team leader in all cases, except when the cognizant REO grants a variance.

2.1.2 Design Procedure. Refer to ACGIH Manual Chapter 5, Exhaust System Design Procedures, for guidance on system calculations. Use para. 2.1.2.1 through 2.1.2.10 for all ventilation system designs.

2.1.2.1 Step 1. Identify all significant contaminant sources that require ventilation control. The cognizant industrial hygiene office should provide a source characterization with area diagrams of the contaminant sources, and employee work areas with percentage of time spent in each area. Consider also how the system under design might affect the performance of any existing processes or ventilation systems.

2.1.2.2 Step 2. Consider how the facility is to be used or expanded in the future. It may be possible to initially specify fans that are capable of handling future needs at minimal increased cost.

2.1.2.3 Step 3. Select or design the exhaust hood that best suits the workpiece or operation. Design the exhaust hood to enclose the workpiece or operation as much as possible (e.g., using baffles). This will reduce the ventilation rates required to provide contaminant control. This handbook provides optimum exhaust hood types for many of the operations covered.

2.1.2.4 Step 4. Determine the capture velocity required to control generated contaminants. Capture velocities in this handbook are specified assuming there are no crossdrafts or turbulence that adversely affect capture efficiency. In some instances, conditions exist where industrial ventilation alone can not reduce employee exposures below the permissible exposure limit (PEL). Do not design for reduced capture velocity or exhaust volume flowrates because workers use personal protective equipment (PPE).

Reduce potential for crossdrafts or turbulence near a given exhaust hood by properly locating and designing the hood with baffles, and also by designing the replacement air system to complement the exhaust system.

2.1.2.5 Step 5. Determine the exhaust flowrate in cubic feet per minute (cfm) required to maintain the capture velocity determined in Step 4.

2.1.2.6 Step 6. Design the exhaust system ductwork based on the following:

a) Size the duct to maintain the minimum transport velocity throughout the system. Route the duct as directly as possible with respect to other criteria in this handbook. Use low loss fittings. Refer to para. 2.1.3.1 for details.

b) Provide a balanced system without blast gates or adjusting dampers according to the ACGIH Manual, Chapter 5. Consider using blast gates only for complex systems or systems that might require future changes or additions. Mark and lock blast gates in place after the systems are balanced and accepted.

c) Ensure that construction materials do not chemically react with contaminant to cause system degradation.

d) Provide a long straight section of duct at the fan inlet and outlet to ensure the fan operates at its rated performance. Refer to para. 2.1.3.2 for details.

e) Provide test ports to allow standardized performance testing according to the ACGIH Manual. Refer to para. 2.1.3.7 for details.

2.1.2.7 Step 7. Size, select, and position the fan for the most effective operation. Refer to para. 2.1.3.2 for details.

2.1.2.8 Step 8. Provide a discharge stack with sufficient height and exit velocity to ensure contaminant dispersion. Refer to para. 2.1.3.3 for details.

2.1.2.9 Step 9. Select an air cleaning device, based on the cognizant regulatory agency (e.g., state, or local) requirements for air emissions. Refer to para. 2.1.3.4 for details.

2.1.2.10 Step 10. Provide a sufficient quantity of replacement air, and distribute it so that it does not create turbulence near the hood. Temper the replacement air to provide heating and cooling in the room. Refer to para. 2.1.3.5 for details.

2.1.3 Common System Criteria. Several design areas are common to all industrial ventilation systems. The criteria given in para. 2.1.3.1 through 2.1.5.4 provide general guidance. Subsequent sections provide design guidance particular to specific types of facilities.

2.1.3.1 Ductwork.

a) Design all ductwork using criteria listed below:

1) Sheet Metal and Air Conditioning Contractors National Association (SMACNA), Round Industrial Duct Construction Standards, or Rectangular Industrial Construction Standards.

2) SMACNA Manual Thermoplastic Duct Construction. Plastic ductwork, where used, shall be fire resistant and self extinguishing.

3) ACGIH Manual, Chapter 8, Construction Guideliunes for Local Exhaust Systems.

4) American National Standards Institute (ANSI), Z9.2, Fundamentals Governing the Design and Operation of Local Exhaust Systems.

b) Design the most direct possible route for duct systems from intake to discharge to minimize total system resistance and operating costs.

c) Design duct systems to operate according to the ACGIH Manual, Chapter 5, in a balanced fashion without the use of blast gates or adjusting dampers. Specify round ductwork whenever possible to minimize cost.

d) Design elbow as shown in Figure 1. Do not use a radius of centerline curvature to duct diameter ratio of less than 2:1. Whenever possible, use a ratio of 2.5:1. Figure 2 shows a rectangular elbow. Keep the aspect ratio (width divided by depth) in the elbows greater than or equal to 1.0.

e) Design expansions at branch entries to maintain the minimum transport velocity in all segments, as illustrated in Figure 3. Branch entries are a common source of design problems. Figure 4 illustrates proper and improper design.

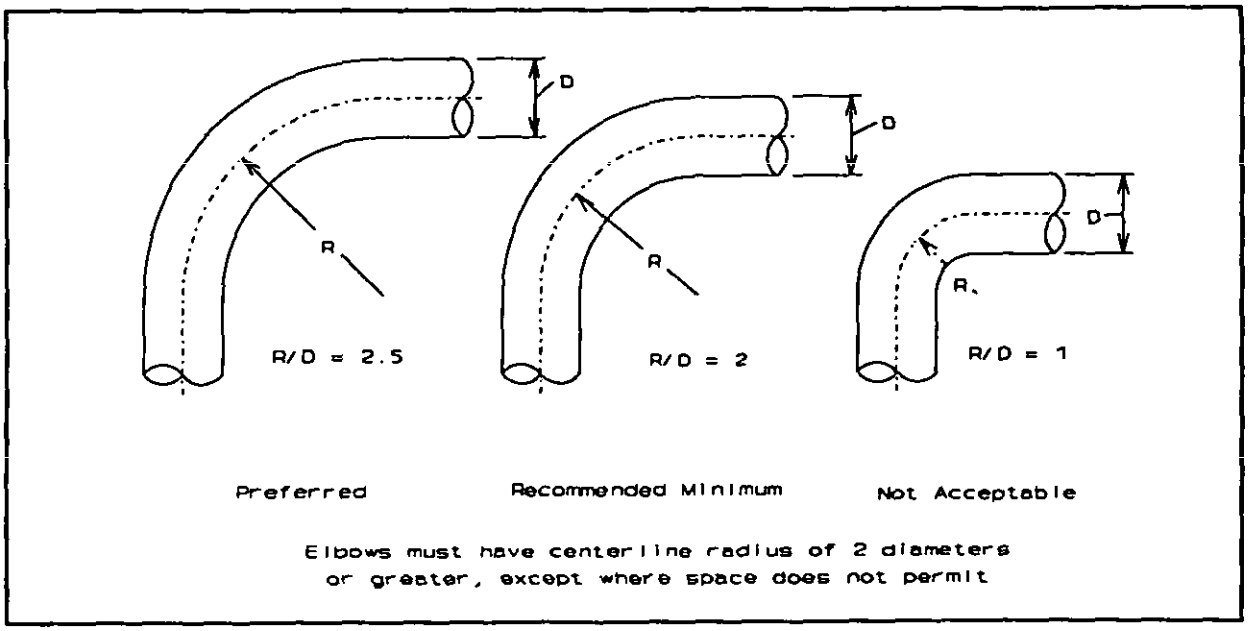

Figure 1
Duct Elbow Design

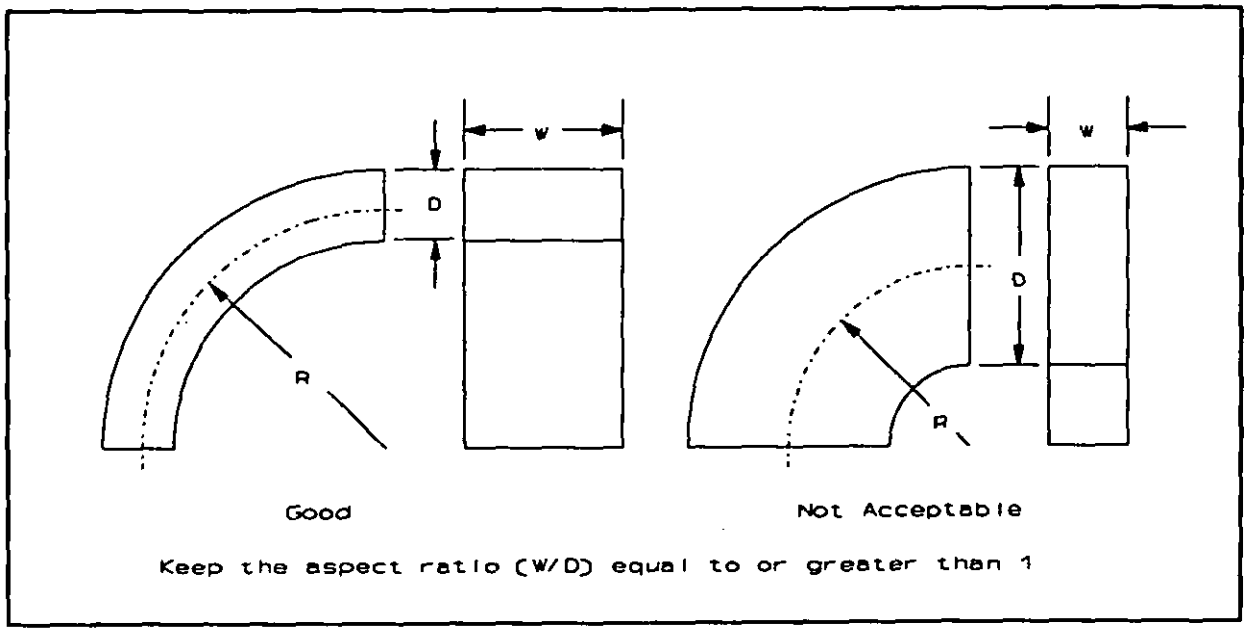

Figure 2
Rectangular Elbow Design

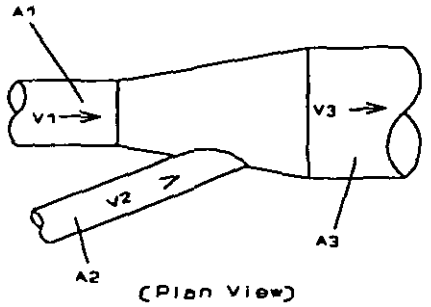

V1, V2, V3, must all be greater than or equal to VM, the minimum transport velocity

A1, A2, A3, are the respective cross-sectional areas

Size the duct to maintain the minimum transport velocity.

Figure 3
Branch Entry Sizing to Maintain Transport Velocity

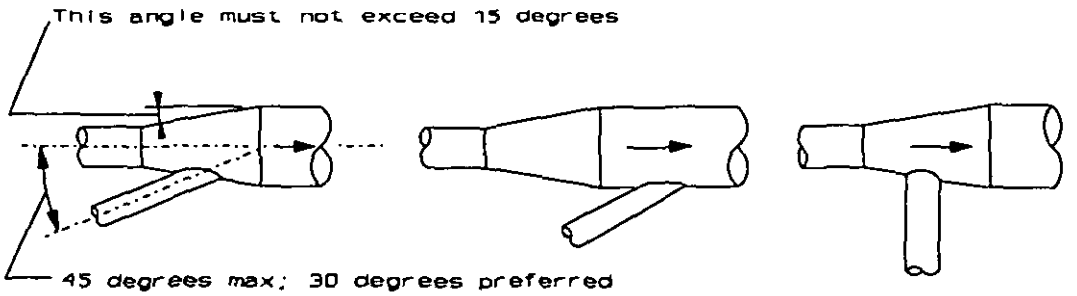

Branches shall enter from side or top except where space does not permit

Figure 4
Branch Entry Orientations

f) Design branches to enter at expansions, not before or after them. The entry angle should be 30 degrees but shall not exceed 45 degrees. Branches should enter at the top or the side of the main duct with no two branches entering the same transition. Where two branches enter a main duct, use the dual design shown in Figure 5. For proper "wye" connection design, see Figure 6. Never use the "tee" design labeled "not acceptable" in Figure 6.

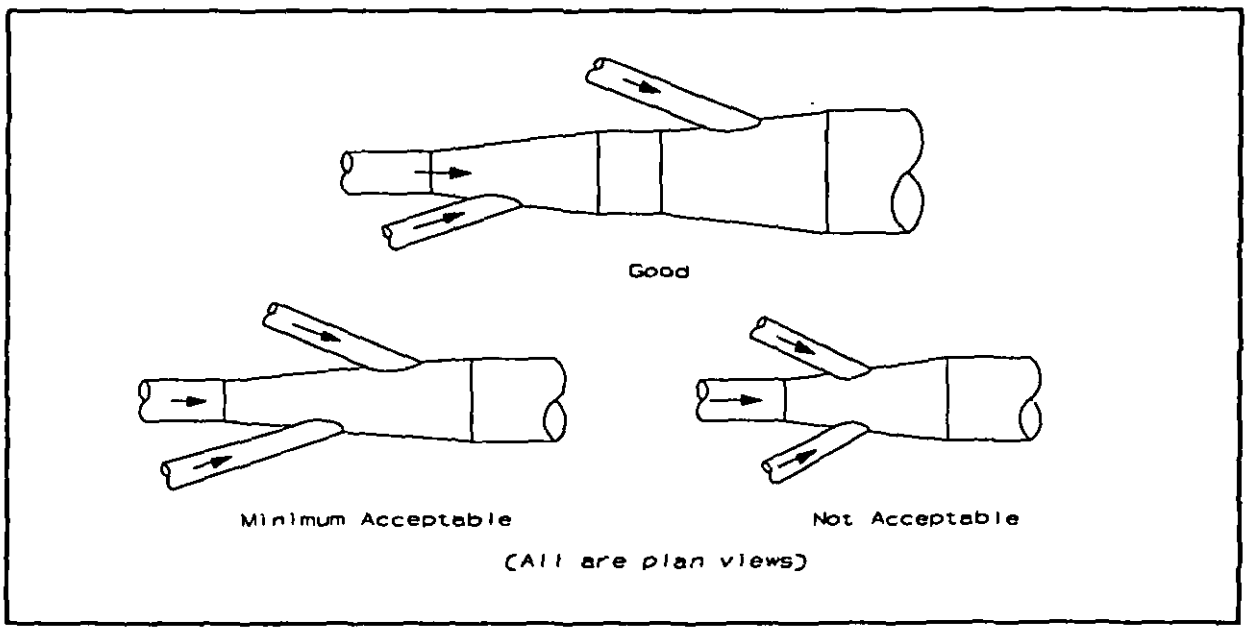

Figure 5
Dual Branch Entry Design

2.1.3.2 Fans.

a) Selection. Fan selection criteria for replacement air fans and exhaust air fans are identical.

1) Select industrial fans that meet pressure and volume flowrate requirements, and are able to deliver 25 percent more flowrate than designed. As a minimum, select fans that meet class II construction. Do not select fans with forward curved blades.

2) Specify fan shafts that have a uniform diameter along the entire length. Use bearings that are rated at no fewer than 200,000 hours.

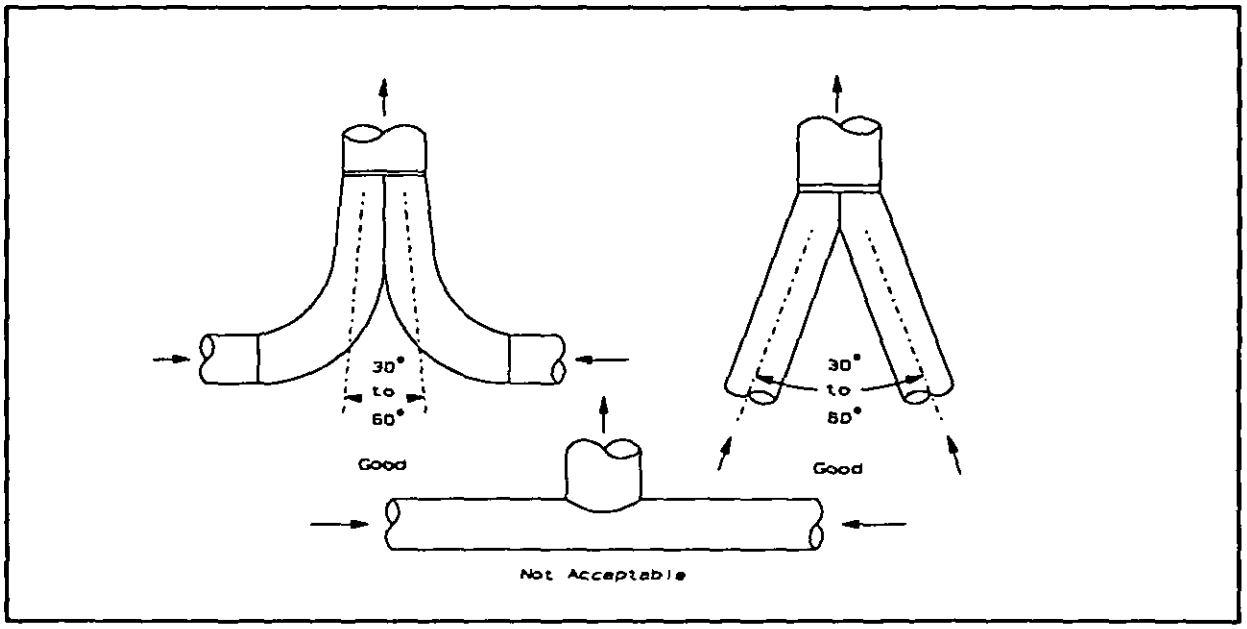

Figure 6
Wye Connections

3) Select electric lines and fan motor starters that are one size greater than required by the National Electrical Code. The reason for the increased fan construction and the oversized electrical supply is that unforeseen fan system effects often cause more system resistance than anticipated during fan selection. Air Movement and Control Association, Inc. (AMCA), Publication 201, Fans and Systems describes fan system effects in detail. Chapter 6 of the ACGIH Manual summarizes this information.

4) Select only energy efficient motors. Select the exhaust fan motor to handle cold startup amperage for nonstandard air processes (e.g., elevated temperatures and humidity).

b) Installation.

1) Provide a long straight section of duct (6 diameters minimum) immediately upstream of the fan inlet. This ensures a uniform air velocity profile that allows the fan to operate at its rated performance.

2) Specify the fan discharge into a straight section of duct at least 3 diameters long (refer to AMCA Publication 201).

3) Specify vibration isolating couplings at the fan inlet and outlet. Mount all fans on vibration isolating bases. In all cases, install exhaust fans outside the building which they serve to isolate the working space from contaminants during fan maintenance. This minimizes noise and ensures negatively pressurized ducts in the building.

4) Locate the fan after the air pollution control equipment to protect fan blades from contaminated airstream.

5) All fans shall be licensed to carry the AMCA Certified Air Performance Seal. Provide access for maintenance to all fans, including ladders and guardrails where necessary.

2.1.3.3 Exhaust Stacks.

a) Exhaust Effluent Considerations. Airflow over a building creates an eddy zone as shown in Figure 7. Discharge exhaust effluent outside this eddy zone to provide adequate dispersion and to prevent reentry of the exhaust air into replacement air intakes.

The eddy zone height depends on building shape and wind velocity; Figure 7 shows an approximate range. In all cases, the exhaust stack must extend above the eddy zone. Evaluate the effect of local topography and present and planned structures on effluent dispersion.

The ratio of discharge velocity to wind velocity must be at least 1.5:1 to provide good effluent breakaway as shown in Figure 8. The most efficient way to increase stack discharge velocity is to provide a nozzle at the top of the stack. This will, of course, add resistance which must be accounted for in the calculations. For additional information on airflow around buildings, refer to American Society of Heating, Refrigerating, and Air Conditioning Engineers (ASHRAE), ASHRAE Fundamentals Handbook.

b) Design Considerations. The best designs are cylindrical, vertical discharge stacks as shown in Figure 9. Do not use a horizontal discharge stack. The offset styles shown in Figure 9 are acceptable, but each has a greater resistance to flow than the straight style with the no loss stack head.

Do not use deflecting weather caps; they do not protect the system from weather effects and result in detrimental effluent dispersion. Use a stack diameter, which will produce a minimum stack velocity of 2500 feet per minute (fpm) or 12.7 meters per second (m/s) to prevent any rain or condensation from running down the inside of the stack.

c) Location and Structural Considerations. Do not select stack locations based on prevailing winds. A stack must provide effluent dispersion under all wind conditions.

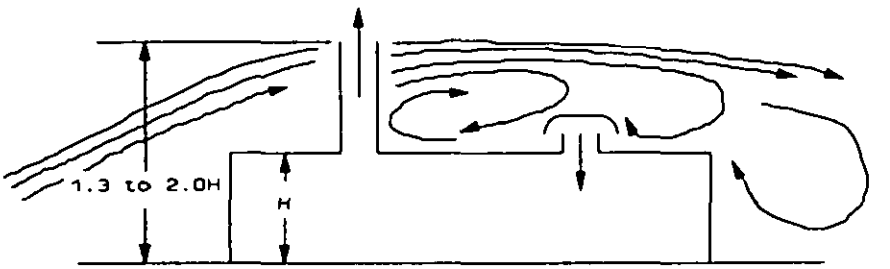

Good

Stack extends above eddy zone;
Effluent is dispersed and does not enter inlet.

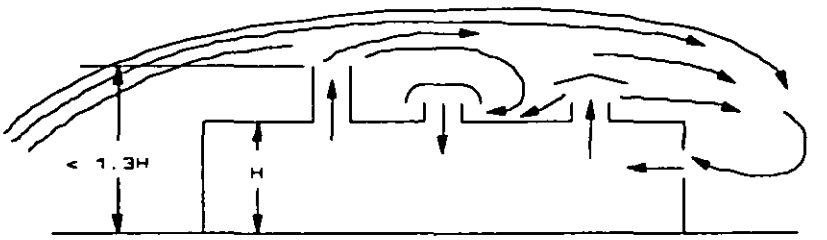

Not Acceptable

Stack too short (left); stack has poor cap (right);
Effluent is not dispersed, and may enter inlets.

These guidelines apply to the simple case of a low building without surrounding obstructions on reasonably level terrain.

Reference: Clark, J.H., "Air Flow Around Buildings", Heating, Piping, and Air Conditioning, 39, 5, May, 1967, pp. 145-154.

Figure 7
Stack Height Relative to Eddy Zone

Refer to the Naval Facilities Engineering Command Structural Engineering Criteria Manuals for exhaust stack design considerations. Some structural considerations are wind load, lightning protection, and stack support. Refer to MIL-HDBK-1004/6, Lightning (and Cathodic) Protection and SMACNA publication, Guide for Steel Stack Design and Construction for additional information.

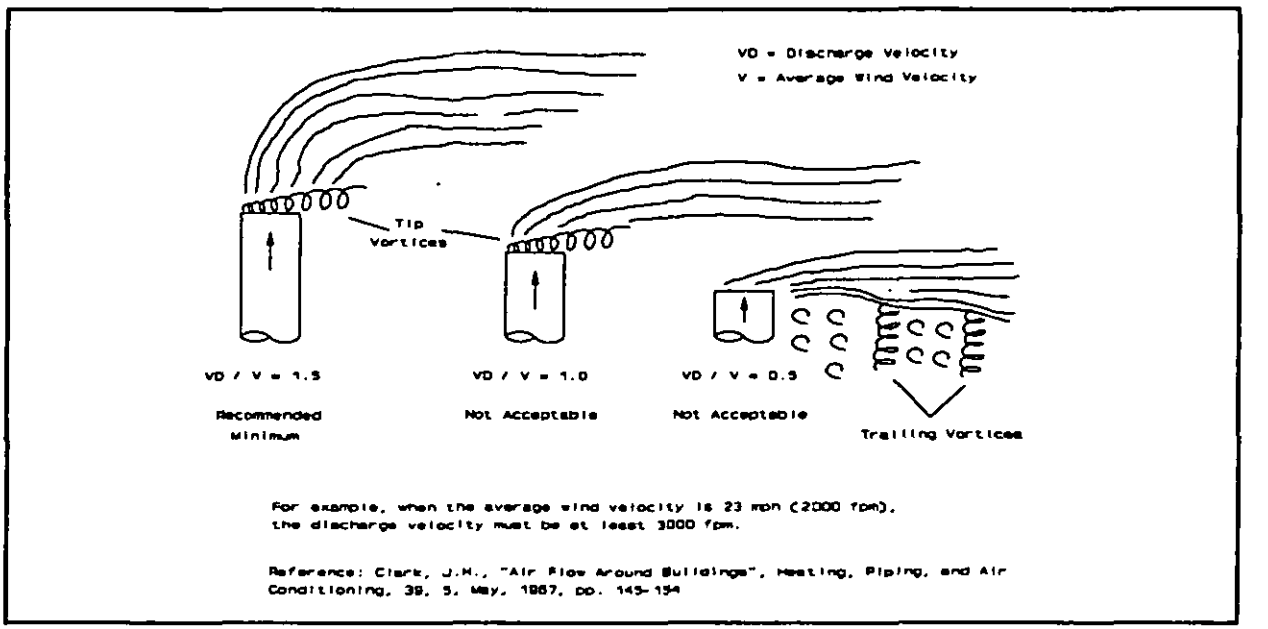

Figure 8
Discharge Velocity and Effluent Dispersion

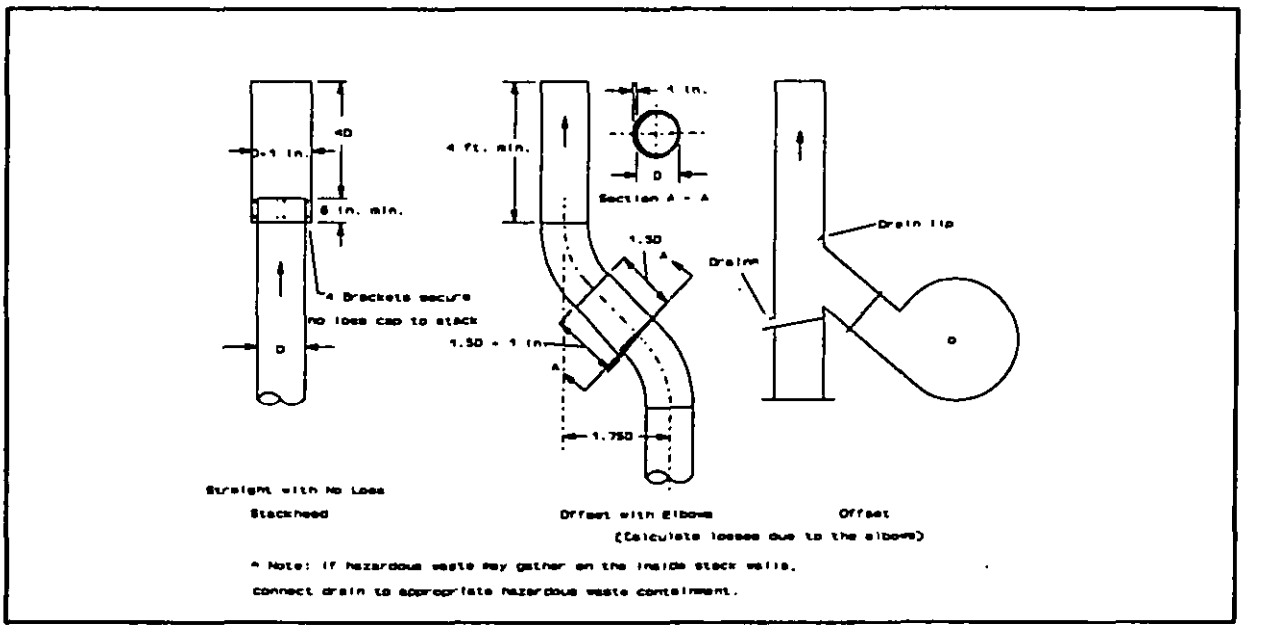

Figure 9
Exhaust Stack Designs

2.1.3.4 Air Pollution Control Equipment. Requirements for air pollution equipment vary by process and geographical region in the United States. Contact the local activity environmental manager to determine the pollution control requirements for the process.

2.1.3.5 Replacement Air.

a) General Considerations. Industrial ventilation is defined as the exhaust and simultaneous replacement of air in a space. Replacement air is as important as exhaust air in controlling industrial process contaminants. The method of distributing replacement air and the quantity of replacement air are critical with respect to exhaust air.

b) Criteria. Modulate replacement air, not exhaust air, to control and maintain design pressures inside a ventilated space. Design the quantity of replacement air according to the criteria given in each of the succeeding chapters of this handbook for particular process systems.

c) System Design. Design the replacement air system according to the decision tree shown in Figure 10.

d) Plenum Design. Use either of these two choices for replacement air plenum design:

1) Design for 1000 fpm (5.1 m/s) replacement air velocity through the open area of the perforated plate if perforated duct is used inside the plenum as shown in Figure 11.

2) Design for 2000 fpm (10.2 m/s) replacement air velocity through the open area of the perforated plate if the plenum is served with ducts using diffusers, grills or registers as shown in Figure 12.

Do not use an open area less than 5 percent for the plenum face. Use perforated plate to cover as much of the ceiling (or wall opposite the exhaust hoods) as is practical.

e) Perforated Duct Design. Use perforated duct to evenly distribute the flow of replacement air inside the plenum or area. Manufacturers provide several different types and sizes of perforated duct.

Use recommendations from the manufacturer for duct design. The manufacturer will not only recommend the size, shape, and type of the required perforated duct, but also the location of the orifices and reducers to distribute the air properly.

Orifices and reducers are used to control the amount of air flow through the perforated duct so air is distributed evenly along the length of the duct. Use oval duct if space constraints limit the use of round duct.

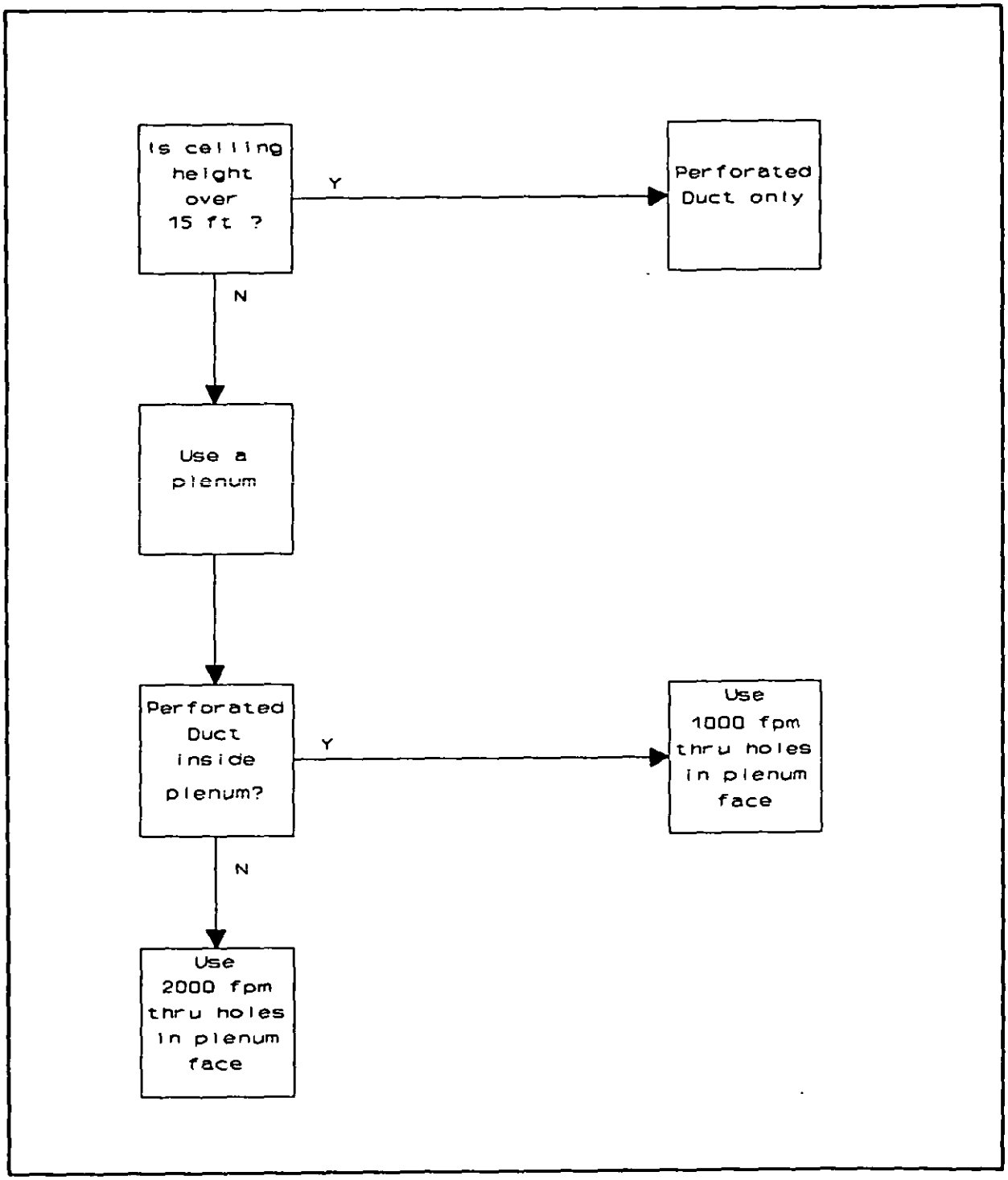

Figure 10
Decision Tree for Replacement Air Design

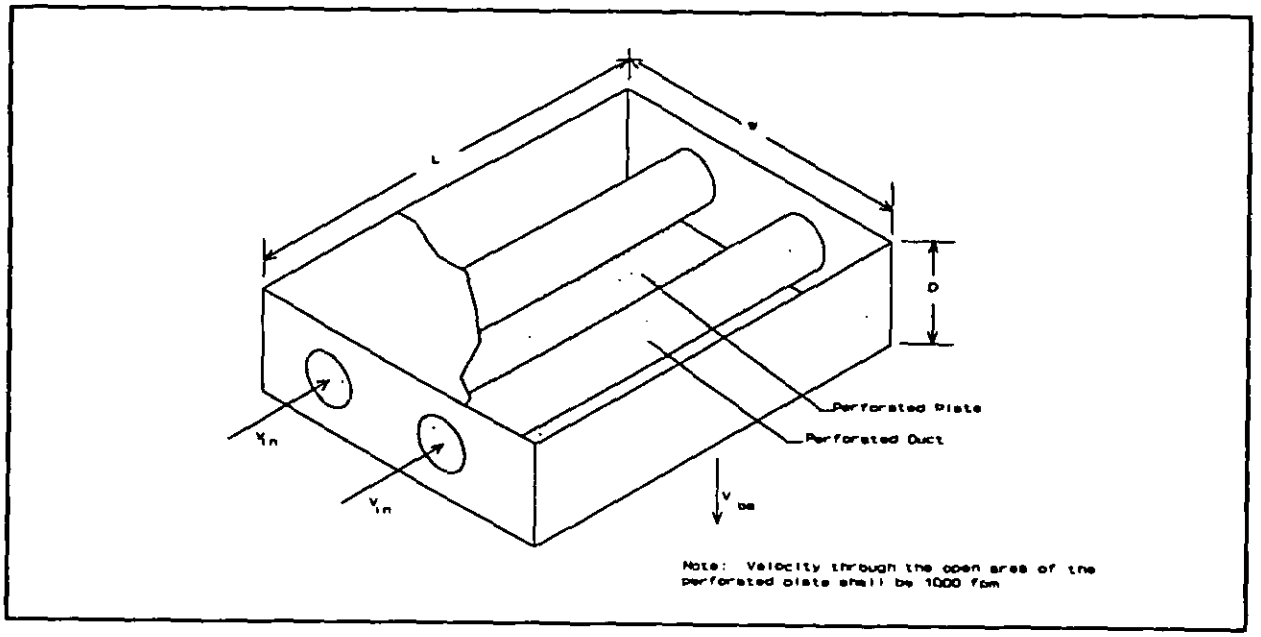

Figure 11
Plenum Design with Perforated Duct

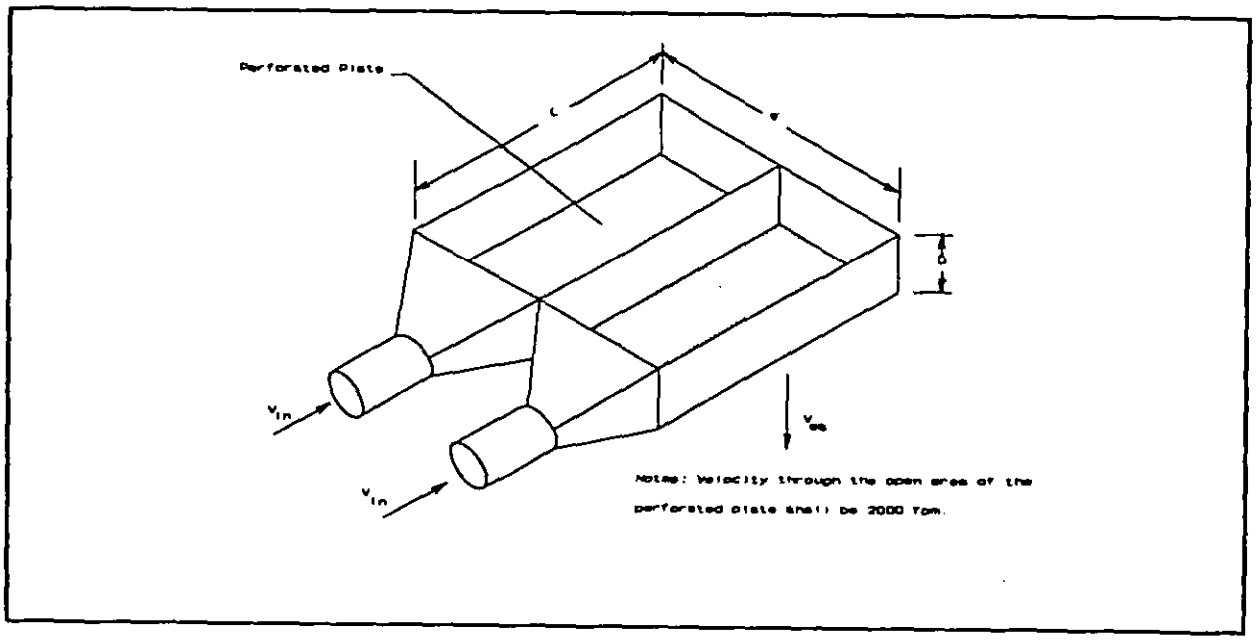

Figure 12
Plenum Design Without Perforated Duct

f) Air Handling Unit Design. Select a replacement air fan that has the capacity to provide 110 percent of the required replacement air. The required replacement air volume flowrate is 95 percent of the total exhausted air volume flow rate. The extra capacity is required to allow control flexibility.

Select centrifugal fans with backward inclined airfoil blades for the replacement air systems.

Replacement air units usually consist of a fan, air filters, and cooling and heating coils. Design filter boxes to hold replaceable (disposable) filters. The outside air intake shall be drawn through a unit mounted louver, complete with a built in rain lip, vertical rain louvers, and a bird screen.

Coils shall be removable and shall contain heating coils in a common or individual casing. Steam coils, where used, shall be vertical. Seal coils to the casing to prevent air leakage around the coils. Refer to the Underwriters Laboratories (UL) Standard 1096, Electric Central Air Heating Equipment, when electric coils are used.

For gas fired systems, the heater elements shall meet American National Standards Institute (ANSI) Standard Z21.47, Gas Fired Central Furnaces (Except Direct Vent Central Furnaces), and be certified by American Gas Association (AGA). They shall cover at least 70 percent of the outlet area to minimize bypass air and to reduce surface temperature. Gas burners shall be electric ignition type.

2.1.3.6 Controls.

a) Strategy. Provide industrial ventilation system controls and associated alarms to ensure contaminant control, space specific balance and conditioning, a safe and healthy work environment, and system malfunction notification.

Control the ventilated space pressure by modulating the quantity of replacement air. Use variable speed motors (which are relatively inefficient) or magnetically coupled "eddy current" drives between fan and motor (which are relatively costly), or fan inlet guide vanes. Using dampers to control replacement air quantity is inefficient and unreliable.

Room air pressure sensors shall signal the appropriate control device. Place room differential pressure sensors away from doors, windows, and replacement air discharge. At all entrances to each ventilated space, provide signs that state:

KEEP DOOR CLOSED
THIS DOOR MUST BE CLOSED
FOR EFFECTIVE CONTROL OF
CONTAMINANTS

Provide an interlocked on-off switch so that the replacement air and exhaust air systems operate simultaneously. Clearly label which exhaust fan is interlocked with which supply fan when there are multiple fans.

b) Gauges and Sensors. Provide continuous monitoring of system performance. The minimum requirements are:

1) Use differential pressure sensors, with gauge readouts, across each replacement air filter section. Set points on the gauge to trigger an alarm when the pressure drop or gain across the filter exceeds the manufacturer's recommended value. A pressure drop occurs when there is a blow through a filter and a pressure gain occurs when the filter gets loaded.

2) Use operating light on replacement air system fan motor.

3) Use static pressure sensor at the outlet of the replacement air fan with a gauge readout. Set points on the gauge to trigger an alarm when the pressure is lower than the recommended range (as determined by baseline testing).

4) Use a hood static pressure sensor with a gauge mounted in a conspicuous place near the hood. Set points on the gauge to trigger an alarm when the static pressure is lower or higher than the recommended range (as determined by baseline testing). Do not use the type of inline flow sensor, which measures the pressure drop across an orifice plate. Use only a static pressure tap and differential pressure gauge.

5) Use differential pressure sensor across each exhaust air cleaning device with gauge readout. Set points on the gauge to trigger an alarm when the pressure drop across the device exceeds the manufacturer's recommended value.

6) Use static pressure sensor at the exhaust fan inlet with gauge readout. Set points on the gauge to trigger an alarm when the pressure is lower than the recommended range (as determined by baseline testing).

7) Use exhaust air system motor operating light. When a sensor indicates a malfunction, trigger an alarm which is both audible and visible in the shop space.

8) Mark the operating ranges on all gauges clearly. Locate gauges on an annunciator panel (except hood static pressure gauges). Provide a three way valve at each gauge connection for cleanout and calibration, see Figure 13.

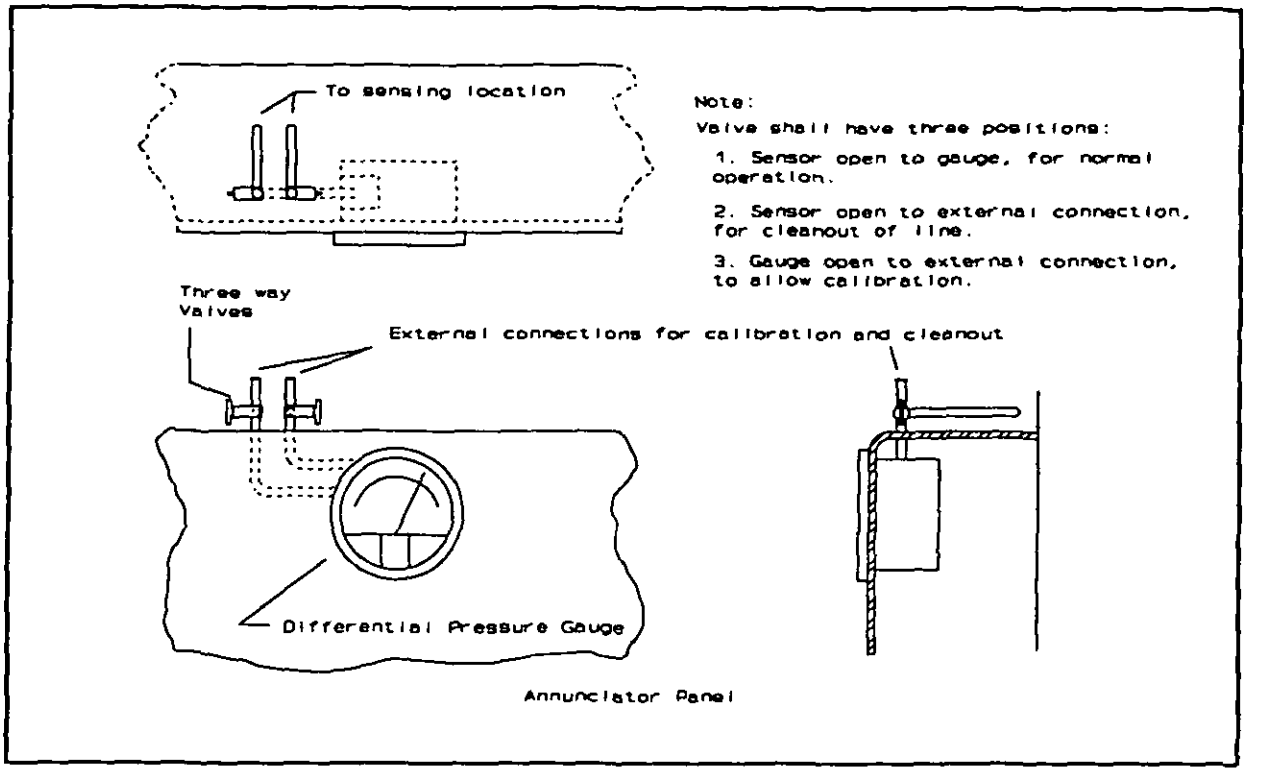

Figure 13
Annunciator Panel

c) Annunciator Panel. Provide an annunciator panel to continuously monitor ventilation system performance. Locate the panel so it is accessible to shop personnel. The panel shall include, but not be limited to, all gauges (except hood static pressure gauges) described in para. 2.1.3.6.

Mount fan motor operating lights and interlocked on-off switch on the panel. The interlocked switches shall clearly show which exhaust and supply fans are interlocked, where multiple fans are used. The panel should indicate what action is to be taken when operation falls outside the prescribed ranges, e.g. "examine/replace filter on R.A. unit when this gauge reads outside indicated range."

2.1.3.7 Provision for System Testing. Provide ports to allow system performance testing. Position the ports as shown in Figure 14. Position each port in the same duct cross-sectional plane as the continuous monitoring sensor. In addition, provide access to the fan motor to measure voltage and amperage and fan speed. Specify that all testing shall be done according to the ACGIH Manual, Chapter 9.

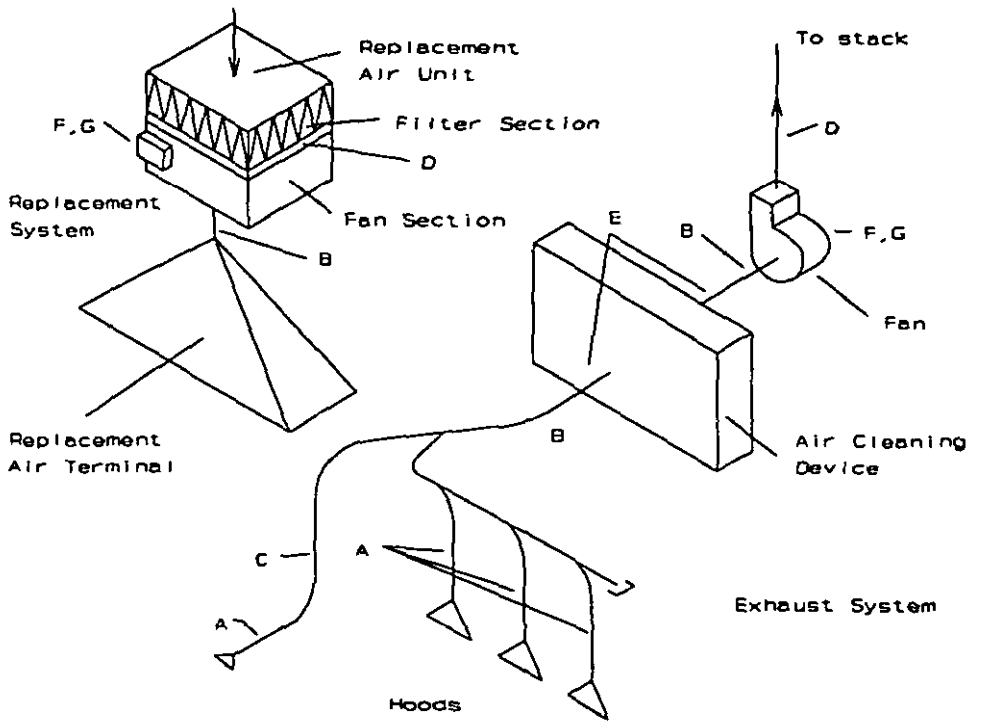

Point	Measurement	Location of Measurement
A	Hood Static Pressure	3 Duct diameters from hood (flanged or plain hoods) 1 Duct diameter from hood (tapered hoods)
B	Velocity and Static P.	Branches and mains; preferably 7.5 diameters downstream from the nearest disturbance (elbow, entry, etc.) Also at fan inlet
C	Centerline VP	Small ducts (less than 3" dia.) only; take centerline VP
D	Static Pressure	Outlet of Exhaust Fan, inlet of Replacement Air Fan
E	Static Pressure	Inlet and outlet of air cleaning device
F	Fan Motor Amps & Volts	Motor power box
G	Fan RPM	Fan shaft

Figure 14
Testing Point Locations

2.1.4 Energy Conservation. Incorporate applicable energy conservation measures in the design of all industrial ventilation systems. Criteria herein minimizes volume flowrates through appropriate designs. Evaluate life cycle costs for heat recovery systems and specify when appropriate. Refer to ASHRAE, Equipment Handbook, for details.

Do not use rotary air wheel heat recovery systems, even if they incorporate purge air sections. Refer to NAVFAC DM-3.03, Heating, Ventilating, Air Conditioning, and Dehumidifying Systems for further details.

2.1.5 Noise Control. Use engineering controls as the primary means of protecting personnel from hazardous noise. It is cheaper to eliminate potential noise problems during the design or procurement stages, than it is to retrofit or modify after installation. Personal hearing protection is not an acceptable permanent control strategy.

2.1.5.1 Site Plan. NAVFAC P-970, Protection Planning in the Noise Environment contains guidance for the selection of building sites for facilities at naval installations. The publication is a procedural tool for installation planners to develop an acceptable noise level. This guidance is applicable to existing or expected noise environments and describes noise reduction techniques that may render marginally acceptable locations suitable for use. These guidelines are also consistent with the Air Installation Compatible Use Zone (AICUZ) Program. Refer to the AICUZ Program and MIL-HDBK-1190, Facility Planning and Design Guide for additional information.

2.1.5.2 Specifications. Specify the lowest noise emission level that is technologically and economically feasible. The objective is to ensure, if feasible, an A weighted sound level of 84 decibels (dBA) or less is maintained at all locations in which personnel are required to work.

It is not adequate to specify that individual pieces of equipment shall not produce noise levels in excess of 84 dBA. Determine the sound power levels for each piece of equipment. Use this information to predict the acoustic characteristics of the workspace and the resulting ambient noise level. Design appropriate noise control method if the predicted ambient noise level is in excess of 84 dBA.

2.1.5.3 Architectural Design. NAVFAC DM-1.03, Architectural Acoustics contains specific criteria applicable to architectural acoustics. The manuals in the DM-1 series provide practical information that will be useful in understanding and resolving acoustic problems. Determine the acoustic environment of any kind of activity in advance, both to fulfill the design goals and prevent the need for corrections at a later stage. The manuals discuss acoustic problems of sound transmission between spaces and the behavior of sound within spaces. However, these manuals are not intended to replace the architects' use of an acoustic noise control consultant.

2.1.5.4 Criteria. Listed below are additional criteria related to acoustics and vibration:

Subject	Source
Noise and Vibration Control of Mechanical Equipment	Tri-Service Manual NAVFAC DM-3.10 Army TM-5-805-4 AFM 88-37
Industrial Noise Control Manual	DHEW (NIOSH) Publication No. 79-117
Human Engineering Design Criteria for Military Systems, Equipment, and Facilities	MIL-STD-1472
Noise Control, a Guide for Workers and Employees	OSHA 3048

Section 3: ASBESTOS DELAGGING FACILITIES

3.1 Function. The asbestos delagging facility provides a complete workshop to remove asbestos insulation from piping and mechanical equipment during ship repair. The ventilation system design discussed in this section is for activities with extensive asbestos removal operations. The design includes: shop and equipment space, clean and dirty locker rooms for men and women, and administrative space to support the coordination and monitoring of facility operation.

3.1.1 Design Criteria. Design the facility using general technical requirements in Section 2 of this handbook and the specific requirements in this section.

3.2 Operational Considerations.

3.2.1 Airborne Contamination. When asbestos insulation is delagged, the asbestos fibers are dispersed into the air, creating a health hazard. 29 CFR 1910.1001, dictates protective measures for workers in these facilities, including respirator protection and impermeable outerwear. The regulation also prescribes wetting the asbestos material with amended water (water containing a surfactant), if practicable, to reduce the potential for asbestos fibers to become airborne. Wet asbestos fibers require a higher duct velocity than dry fibers. Choose an air cleaning device suited to a wet airstream.

3.2.2 Heat Stress. The physical nature of the work and impermeable outer garments worn by the workers create heat stress conditions. Equip supplied air respirators with vortex coolers. Consider cooling the replacement air when supplied air respirators are not available. Consider using "micro climate cooling" or "cool suits", mechanically cooled garments, for individual workers.

3.2.3 Ergonomics. Consider human needs during a work shift. Design the facility to allow the workers to take care of their needs without going through decontamination procedures each time.

Figure 15 shows the flow of workers during a typical work shift. Workers enter the clean locker rooms through the administrative area. They put on protective outerwear and proceed to the shop area through corridors that bypass the dirty locker rooms.

After performing delagging, workers vacuum their protective outerwear and dispose of them in containers provided in the decontamination area. They enter the dirty locker rooms and remove the remainder of their work garments.

Workers then proceed to the clean locker rooms via the showers, which act as a barrier to the migration of asbestos fibers. Refer to Chief of Naval Operations Instruction (OPNAVINST) 5100.23, Navy Occupational Safety and Health (NAVOSH) Program Manual for further discussion of procedures during asbestos removal operations.

3.3 Typical Floor Plans. Design floor plans to meet the requirements of 29 CFR 1910.1001 and the previous paragraph. Figure 15 shows a typical layout.

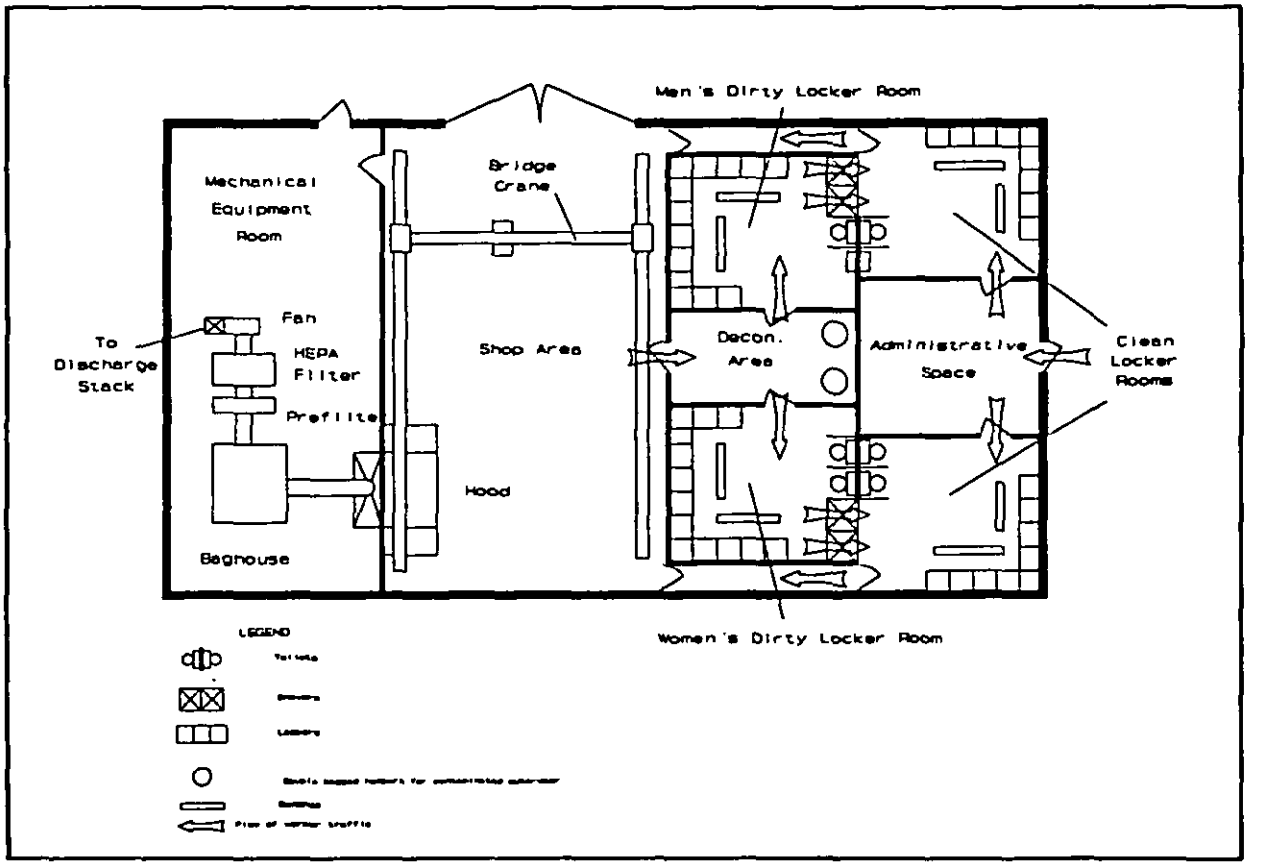

Figure 15
Typical Delagging Facility Floor Plan

3.4 Exhaust Air. Design the exhaust air system to generate a minimum capture velocity of 150 fpm (0.762 m/s) to capture all the contaminants.

3.4.1 Hood Design. Design asbestos delagging hood to enclose the workpiece as much as possible. Do not use small portable hoods with flexible ductwork because they do not provide consistent capture and do not guarantee protection. Figure 16 and Figure 17 illustrate two choices of hood design for asbestos delagging facilities.

Figure 16 shows a hood design consisting of a workbench with a central, circular area. Mount the circular area on sealed bearings to allow easy turning of heavy workpieces. This design is best for high profile workpieces (e.g., boilers, pumps). The hood captures contaminants through the slots into an exhaust plenum.

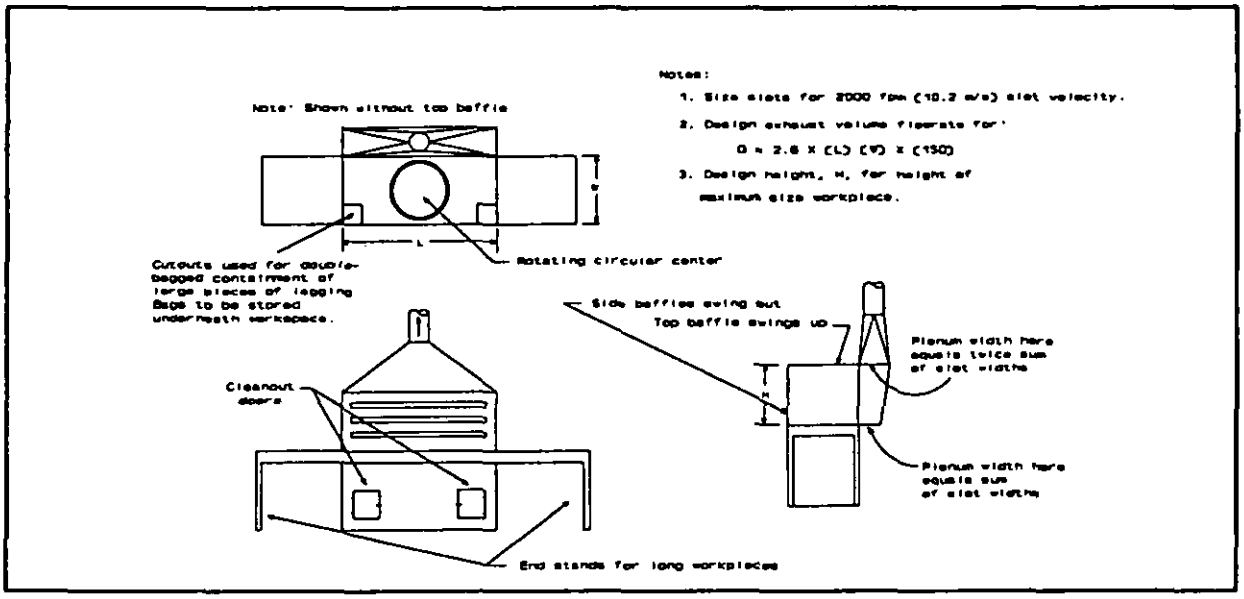

Figure 16
Exhaust Hood for High Profile Workpieces

Figure 17 shows a hood design consisting of a workbench with a grating strong enough to support the heaviest expected workpiece. This is a downdraft hood which draws small pieces of lagging through the grating. The perforated plate below the grating creates even airflow over the grating. This design is best for low profile workpieces such as piping.

Install two cleanout doors on the front and two cleanout doors on the sides of the hood for easy access to asbestos debris. Provide two small cutouts in the outer corners of the workbench to place large pieces of lagging in double bagged containment.

Equip hoods with stands and swinging baffles on each end to accommodate long workpieces (e.g., pipes). The top baffle shall swing up to allow access to overhead cranes.

Design a ventilated section not longer than 8 feet (2.44 m). Design all slots and perforated plate open area for a velocity of 2000 fpm (10.2 m/s). The plenum velocity shall not exceed one half of the slot or perforated plate open area velocity. Design the hood to duct transition with an included angle of no more than 90 degrees.

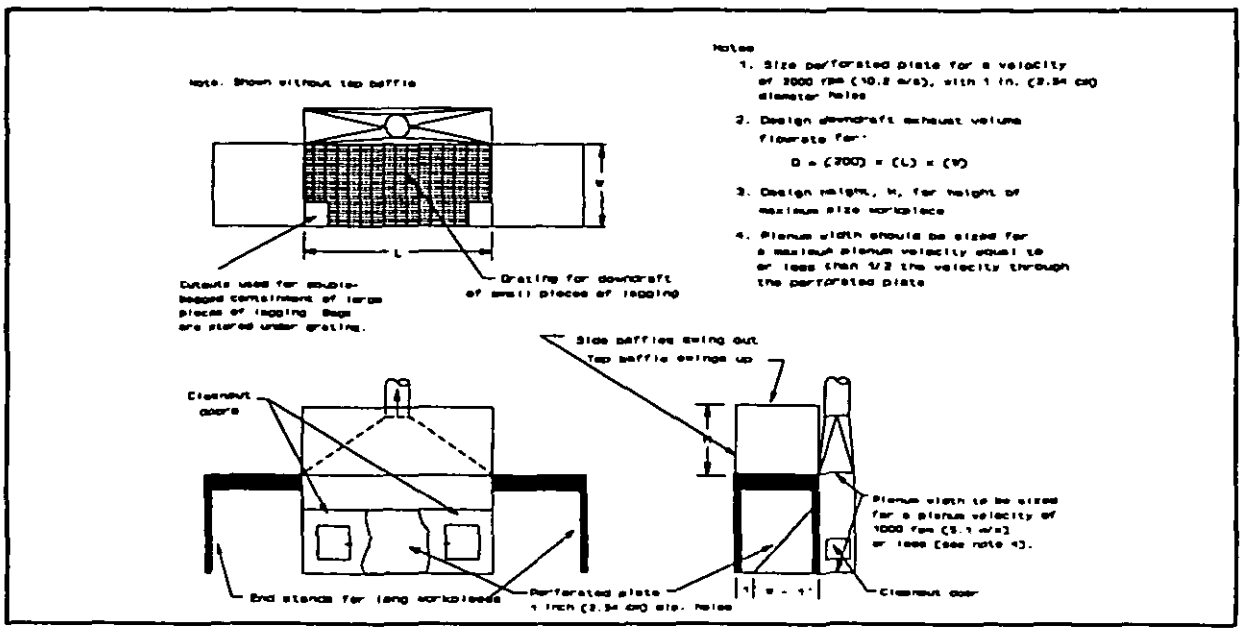

Figure 17
Exhaust Hood for Low Profile Workpieces

3.4.2 Ductwork and Fans.

3.4.2.1 Ductwork. Size exhaust ductwork for asbestos delagging facilities to provide a minimum transport velocity of 5000 fpm (25.4 m/s). The high velocity is necessary because the practice of wetting the fibers makes them heavier and more difficult to transport. Specify duct hangers that have sufficient strength to support the ductwork should it become half filled with material.

Provide cleanout doors adjacent to every bend and vertical riser. In horizontal duct runs, space cleanout doors no more than 12 feet (3.66 m) apart in ducts that are 12 inches (0.305 m) or less in diameter. Space cleanout doors no more than 20 feet (6.0 m) apart in larger ducts. Refer to para. 2.1.3.1 for general duct considerations. Do not locate cleanout doors on the bottom side of ductwork.

3.4.2.2 Fans. Use backward curved airfoil type centrifugal fans for this application. Backward airfoil type centrifugal fans are the most efficient and quiet, but a centrifugal fan with backward inclined blades is also acceptable. Refer to para. 2.1.3.2 for general considerations.

3.4.3 Weather Stack Design and Location. Use a vertical discharge stack with a no loss stackhead. Refer to para. 2.1.3.3 for further details.

3.4.4 Air Cleaning Devices. Figure 18 illustrates the required sequence of air cleaning devices. The contaminated air flows through a baghouse, which contains a fabric filter collector, prefilters, and high efficiency particulate air (HEPA) filters. Install prefilters to extend the life of HEPA filters.

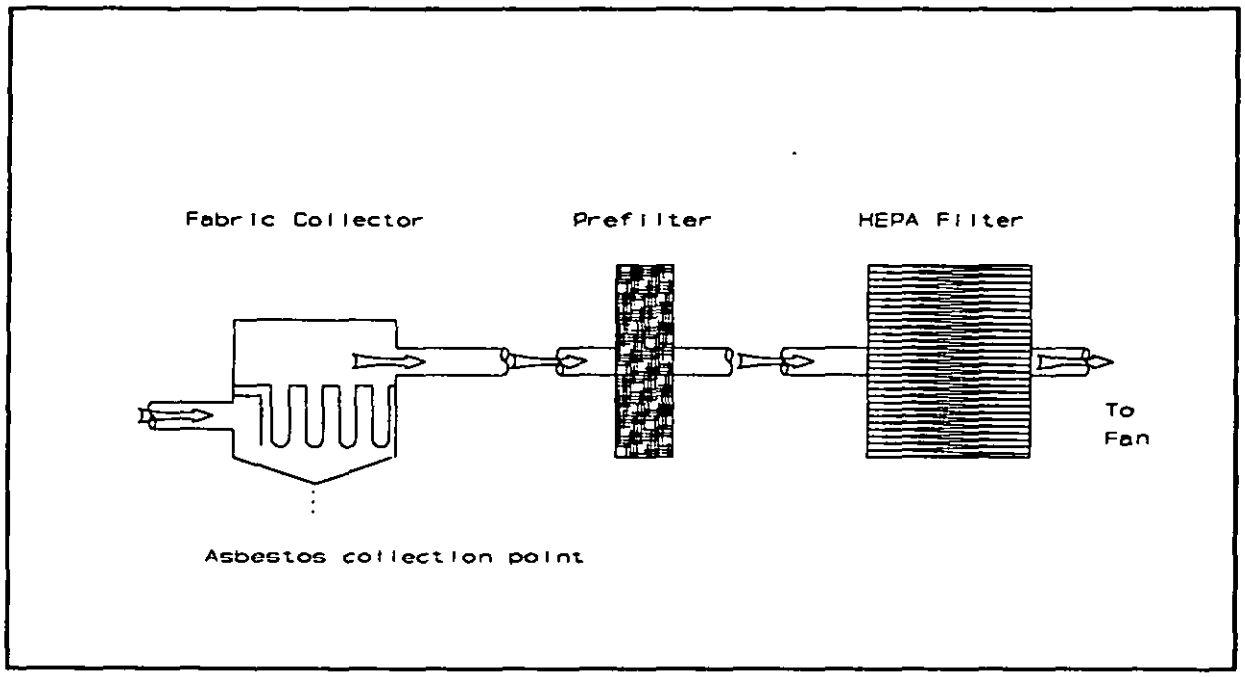

Figure 18
Sequence of Air cleaning Devices for Asbestos Delagging

The baghouse and prefilter shall have weight arrestance efficiency of not less than 99.9 and 70 percent, respectively, according to ASHRAE Standard 52-76, Air Cleaning Devices Used in General Ventilation for Removing Particulate Matter.

The HEPA filters shall be of the "bag in, bag out" style which allows for safe replacement of the filter element without exposure to asbestos. HEPA filters shall have an efficiency of 99.97 percent on 0.3 micron particles, as measured by MIL-STD-282, Filter Units, Protective Clothing, Gas-Mask Components, and Related Products: Performance Test Methods.

All collectors shall deliver the collected asbestos to a common pickup point to minimize the risk of exposure. Provide a double acting valve at each baghouse hopper throat. Refer to ACGIH Manual, Chapter 4 for further details. Use a single chamber, shaker type baghouse to minimize the number of collection points.

Install a mist eliminator before the HEPA filter to eliminate the moisture generated during asbestos removal and extend the life of the filter.

3.4.5 Industrial Vacuum System. Provide a low volume, high velocity (LVHV) central vacuum system at delagging shops to exhaust fibers and dust from power tools (e.g., grinders and saws) when they are used, as required by 29 CFR 1910.1001.

a) Design a central vacuum cleaning system, which consists of a motor driven exhauster interconnected with bag type separators.

b) Connect the separator to rigid tubing, which extends throughout the plant. Terminate the rigid tubing with inlet valves at the various work stations. Provide flexible hose connections to allow workers to do shop cleanup and to decontaminate their protective outerwear.

c) Use local exhaust hoods and high velocity exhaust takeoffs for each hand tool. Refer to Table 1 for minimum flow rates and vacuum hose sizes. The ACGIH Manual illustrates several examples of power tool hoods and lists the required capture velocity for various specific operations.

Table 1
Minimum Volumes and Vacuum Hose Size for Asbestos Operations

Hand tool	Flow rate (CFM)	Hose Size (inch)
Pneumatic chisel	125	1-1/2
Radial wheel grinder	150	1-1/2
Conewheel grinder, 2 in.	150	1-1/2
Cup stone grinder, 4 in.	200	2
Cup type brush, 6 in.	250	2
Radial wire brush, 6 in.	175	1-1/2
Handwire brush, 3 x 7 in.	125	1-1/2
Rip out knife	175	1-1/2
Rip out cast cutter	150	1-1/2
Saber saw	150	1-1/2
Saw abrasive, 3 in.	150	1-1/2
General vacuum	200	2

Reference: Hoffman Air and Filtration Systems, Centrifugal Compressor Engineering.

d) Ensure proper capture velocity is produced at each local exhaust hood. Design vacuum systems to pick up contaminants within 1/2 inch or 12.7 millimeters (mm) of the source.

e) Design the pickup airstream to have a velocity of two to three times the generation velocity for particle sizes from 20 to 30 micron. Design for an additional velocity of:

1) four to five times the generation velocity to pull the particles up through 300 U.S. standard mesh, or

2) six to eight times the generation velocity to pull the particles up through a 20 U.S. standard mesh.

f) Design the air volume for no less than two parts of air to one part of asbestos to be captured by weight.

g) Design the vacuum hose length less than 25 feet (7.6 m). Locate inlet valves 30 to 35 feet (9 m to 10.7 m) apart when a 25 foot length of hose is used. Locate tool vacuum hose connection on the ends of the workbench underneath the stands. Size the hose based on the following:

1) Air volume per hose.

2) Number of hoses to be used simultaneously.

3) The air velocity required to convey the material to the separators.

h) Use single ply, lightweight thermoplastic or polyvinyl chloride (PVC) flexible hose, but limit the usage whenever possible.

i) Use a multistage centrifugal blower for the vacuum system. Size the blower according to the following:

1) The total system pressure loss associated with the total number of hoses to be used simultaneously.

2) The maximum exhaust flowrate entering the inlet of the blower.

j) Feed the blower directly into the baghouse used by the industrial exhaust system (see Figure 19) to minimize the number of asbestos collection points.

k) Install a prefilter and HEPA filter in front of the blower to prevent it from becoming contaminated.

l) Design the vacuum system duct to balance with the exhaust system duct where the two systems connect.

m) Design the entire vacuum system according to NAVFAC DM-3.5, Compressed Air and Vacuum Systems.

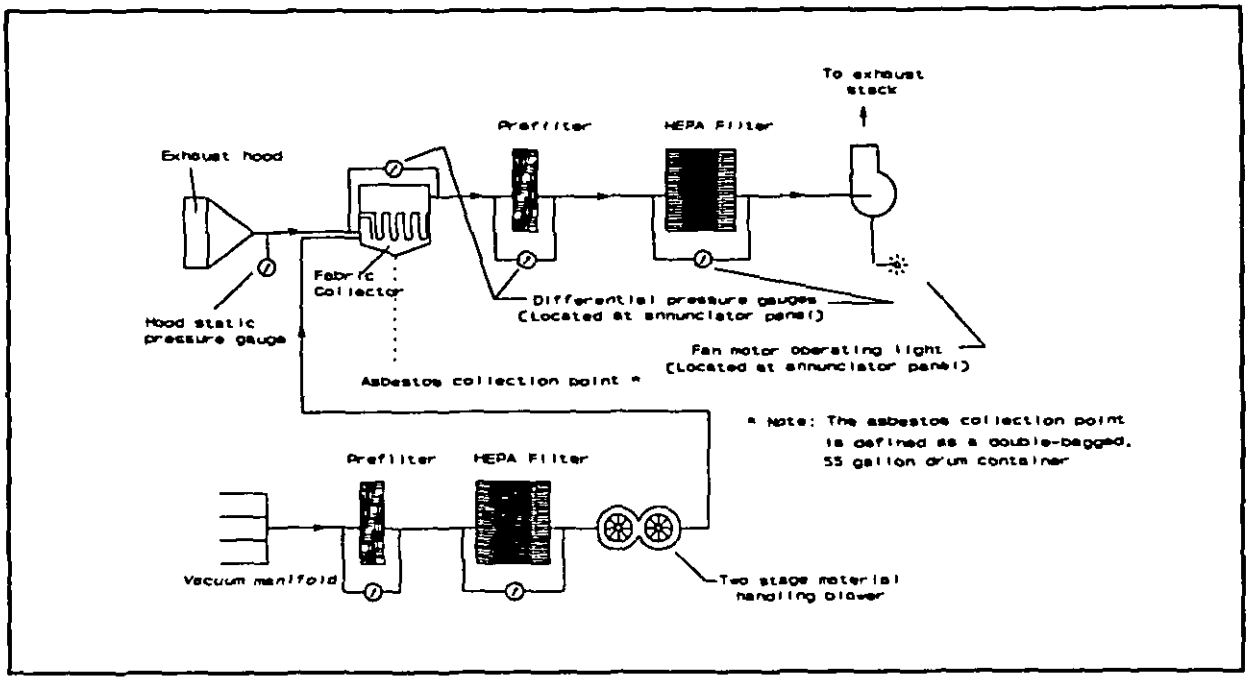

Figure 19
Exhaust and Vacuum System Schematic Diagram

3.5 Replacement Air. Design replacement air systems with fan inlet guide vanes, variable speed motors, or "eddy current clutch" units to maintain a pressure (relative to the atmosphere) ranging from -0.02 to -0.05 inches water gauge (wg) (12.4 Pascal (Pa) to 24.9 Pa) in the shop spaces.

Maintain the pressure in decontamination areas, the equipment room, and dirty locker rooms within a range of -0.01 to -0.04 inches wg (2.49 Pa to 9.96 Pa). Maintain the pressure in clean spaces within a range of +0.02 to +0.05 inches wg (+4.98 to +12.4 Pa). For further replacement air system criteria, refer to para. 2.1.3.5.

3.5.1 Quantity and Distribution. Distribute air in the work space to produce a laminar airflow from supply to exhaust ventilation systems. Use the vertical supply method. Design a drop ceiling throughout the dirty space. Use perforated sheet metal with 3/8-inch (9.5 mm) holes. Install a drop ceiling above the overhead crane, flush mounted light fixtures, and a fire suppression system.

3.5.2 Heating and Air Conditioning. Provide each ventilated space with a dedicated replacement air system. Provide heating and cooling according to NAVFAC DM-3.03. Do not recirculate exhaust air.

3.6 System Controls. Design system controls according to paragraph 2.1.3.6 and the following criteria:

a) Position the annunciator panel at the entrance to the dirty space so operators can monitor operating gauges.

b) Install differential pressure sensors at locations that are representative of average static pressure in each controlled space. This will ensure that desired differential pressures are maintained.

c) Trigger a timer if pressure varies from the specified range. Select timer that automatically resets if the problem is corrected within 60 seconds.

d) Trigger both visible and audible alarms if the system cannot correct the difficulty within allotted time. Install multiple alarm beacons if operator's view is obscured during delagging. Monitor the shop's negative pressure continuously, using strip chart recorder, so the operator can detect any pressure changes.

e) Interlock the hand tool power supply with the ventilation system's on-off switch. This will prevent the use of hand tools without ventilation controls.

3.7 Safety and Health Items. 29 CFR 1910.1001(g)(2) prescribes the permissible respirator types for asbestos handling installations.

a) Use type "C" supplied air, pressure demand class respirators. The potential concentration of asbestos fibers in asbestos delagging facilities warrants the use of this respirator. Such respirators require an external supply of compressed air.

b) Provide supplemental air purifying respirators fitted with HEPA filters (type H) in case air supply is interrupted. Refer to Environmental Protection Agency document EPA-560/OPTS-86-001, A Guide to Respiratory Protection in the Asbestos Abatement Industry for further information.

c) Design breathing air system according to NAVFAC DM-3.5. Provide several connection points for the respirator hoses in the work area to allow worker mobility. The connection for the vacuum hose must not be the same as the connection for the respirator hose. This prevents the use of impure air for breathing purposes. Refer to 29 CFR 1910.134, for additional requirements that will impact the facility design (e.g., respirator cleanup and storage areas).

Section 4: OTTO FUEL II FACILITIES

4.1 Function. MK-46 and MK-48 torpedo facilities maintain, prepare, and test torpedoes. MK-46 and MK-48 torpedoes use Otto Fuel II, a toxic monopropellant. Naval Medical Command Instruction (NAVMEDCOMINST) 6270.1, Health Hazards of Otto Fuel II, gives detailed information on the dangers of exposure to Otto Fuel II. Refer to NAVFAC MIL-HDBK 1028/3, Maintenance Facilities for Ammunition, Explosives, and Toxins for considerations that may impact the design of industrial ventilation systems for these facilities.

Torpedo size differences and maintenance procedures dictate the use of different floor plans and exhaust hood designs for the two facility types. Refer to Naval Sea Systems Command (NAVSEA), NAVSEA OP5, Ammunition and Explosives Ashore Safety Regulations for Handling, Storing, Production, Renovation, and Shipping, Volume 1, for the specific order of operations. In all cases, the industrial ventilation systems must remove hazardous vapor, i.e., Otto Fuel II, products of combustion, and solvent vapor.

4.1.1 Design Criteria. Design the facilities using general technical requirements in Section 2 of this handbook and the specific requirements in this section.

4.2 Operational Considerations. An operation is "dirty" when it creates a potential for personnel exposure to one or more of the following:

a) Otto Fuel II
b) Agitene - the parts cleaning solvents used in MK-46 shops
c) Hydrogen cyanide - a product of combustion in the torpedoes
d) Mineral spirits - a parts cleaning agent used in MK-48 shops

Fueling operations create a potential for accidental spills of Otto Fuel II. Because of this, design each dirty area to have a slightly negative air pressure relative to adjacent areas. This will help to contain any Otto Fuel II vapor that is not immediately captured by the exhaust hoods.

During emergency procedures (e.g, Otto Fuel II spill) workers suit up with protective clothing and a self contained breathing apparatus before entering the contaminated area. After the emergency is controlled, the workers discard the outer layer of protective clothing and shower. The floor plan of the facility should allow implementation of emergency procedures while minimizing the potential for contaminating areas outside the dirty areas.

The physical nature of the work, and the use of protective clothing increase the potential for heat stress. Consider cooling the replacement air to reduce this potential. Refer to NAVSEA S6340-AA-MMA-010, Otto Fuel II Safety, Storage, and Handling Instructions, Rev. 1, for complete operational considerations.

4.3 Exhaust Air.

4.3.1 MK-46 Ventilated Spaces. The MK-46 floor plan shown in Figure 20 optimizes the workflow while allowing the ventilation system to control airborne contaminants. Figure 21 shows an elevation view of this floor plan.

4.3.1.1 MK-46 Standup Backdraft Hood. Workers uncouple the fuel section and the engine section of the torpedo in the teardown operations. During these operations, Otto Fuel II remains in the lines and the components of the engine section, and in the fuel tank. The residual fuel releases vapor into the air. The defueling and refueling processes of a torpedo also release Otto Fuel II vapor. Use the standup backdraft hood as shown in Figure 22 to capture Otto Fuel II vapor in afterbody teardown, fueling, and defueling operations. Design the hood using the following criteria:

a) Design for a capture velocity of 150 fpm (0.762 m/s) at the contaminant source.

b) Size slots for 2000 fpm (10.2 m/s), covered with wire mesh.

c) Design the plenum velocity less than or equal to one half of the slot velocity.

d) Design hood transitions (takeoff) with an included angle no greater than 90 degrees. Specify that the length of the hood served by each exhaust plenum shall not exceed 8 feet (2.44 m). For example, hoods between 8 and 16 feet (2.44 and 4.88 m) in length shall have two exhaust takeoffs.

e) Install baffles to control airflow from the sides and top of the hood bank as shown in Figure 22.

4.3.1.2 MK-46 Workbench Hood. After defueling and decoupling, workers lift the fuel and engine sections onto two different ventilated workbenches. They remove the stabilizing baffles in the fuel section, inspect, and wipe clean before loading the baffles into the parts washer. Personnel also dismantle the engine section to inspect the engine, fuel pump, and sea water pump before loading them into the parts washer.

Design a backdraft exhaust hood, as illustrated in Figure 23, to control contaminants generated by these workbench operations.

4.3.1.3 MK-46 Parts Washer Hood. Design parts washer as shown in Figure 24 to clean off oils and excess Otto Fuel II from torpedo components. The parts washer cover must automatically close in case of fire in compliance with NFPA 34, Dipping and Coating Processes Using Flammable and Combustible Liquids. Design the parts washer large enough to completely enclose the workpiece. Design the parts washer deep enough to allow a minimum clearance of 6 inches (153 mm) between the liquid level and the exhaust slot when the tank is full of parts. Position the parts washer next to the workbenches to shorten the work path and optimize ventilation control.

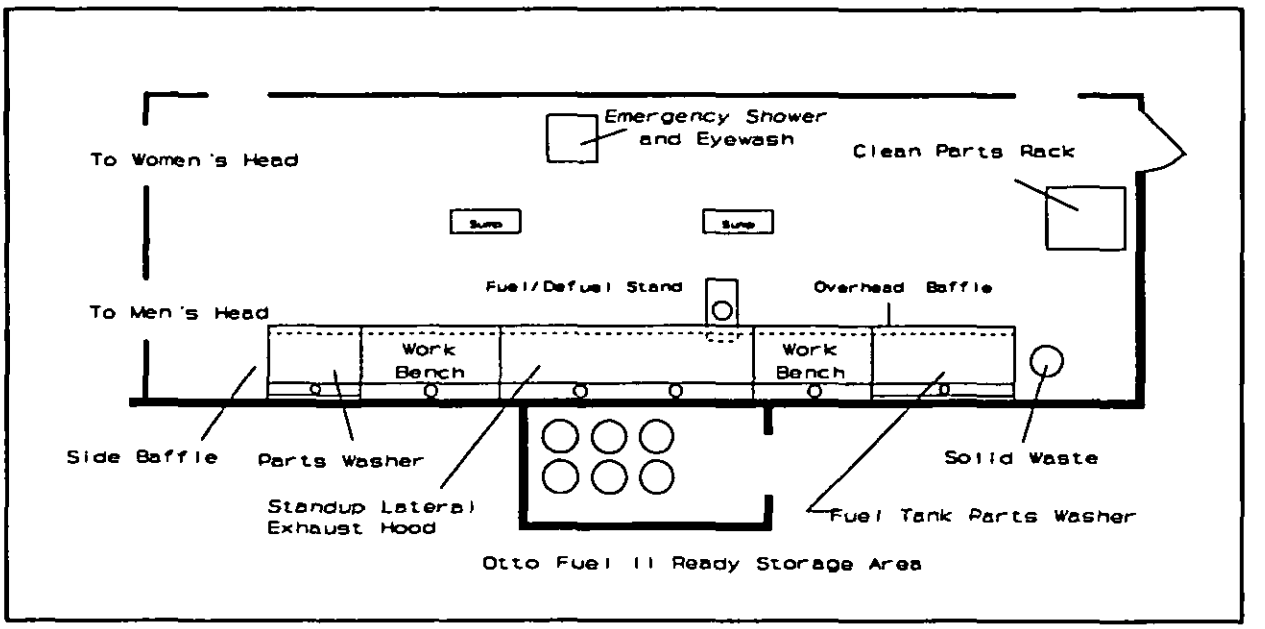

Figure 20
Typical Layout for MK-46 Fuel/Defuel and Afterbody Breakdown Room

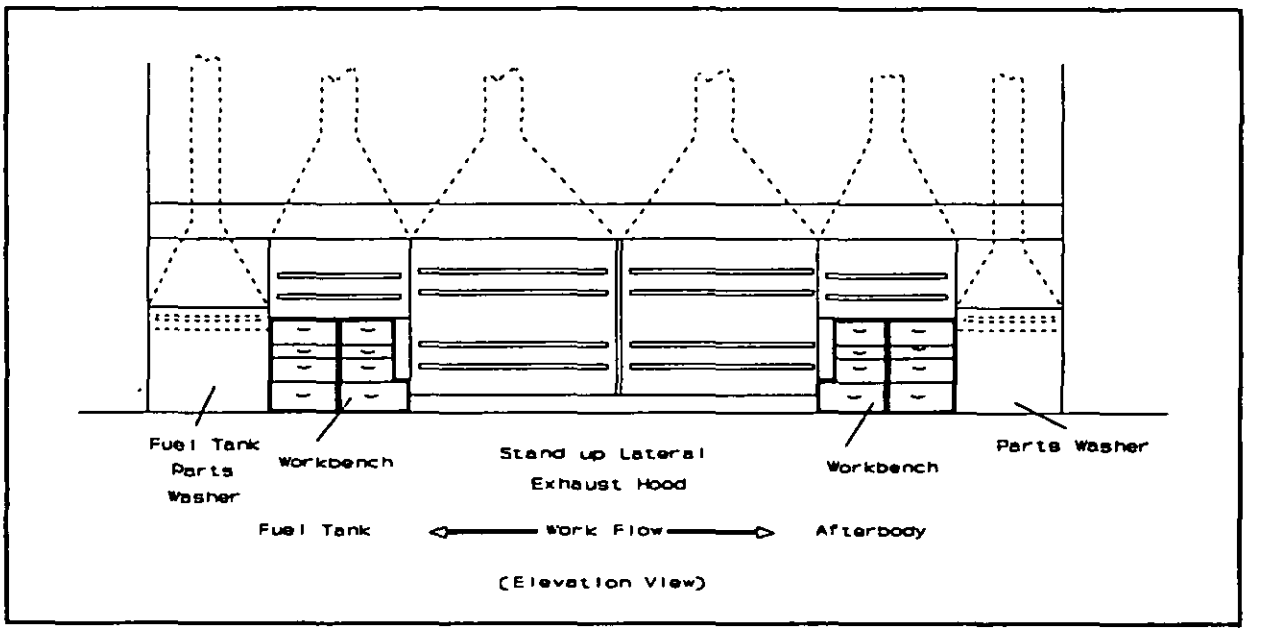

Figure 21
Series of Hood in MK-46 Shop

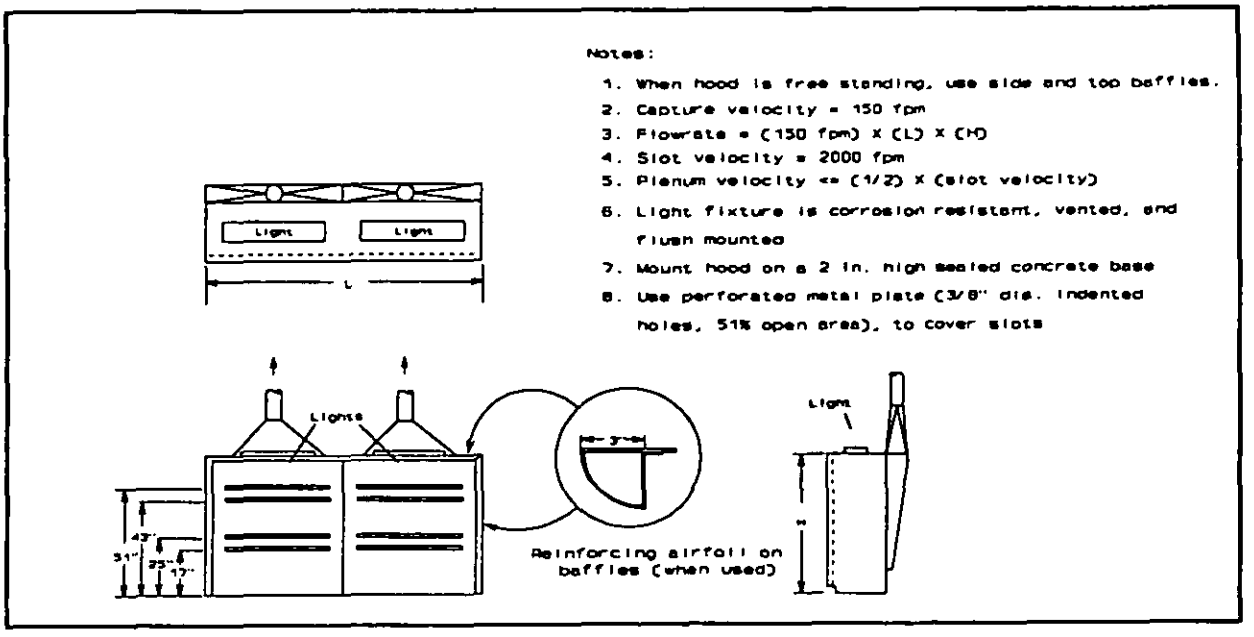

Figure 22
MK-46 Standup Backdraft Hood

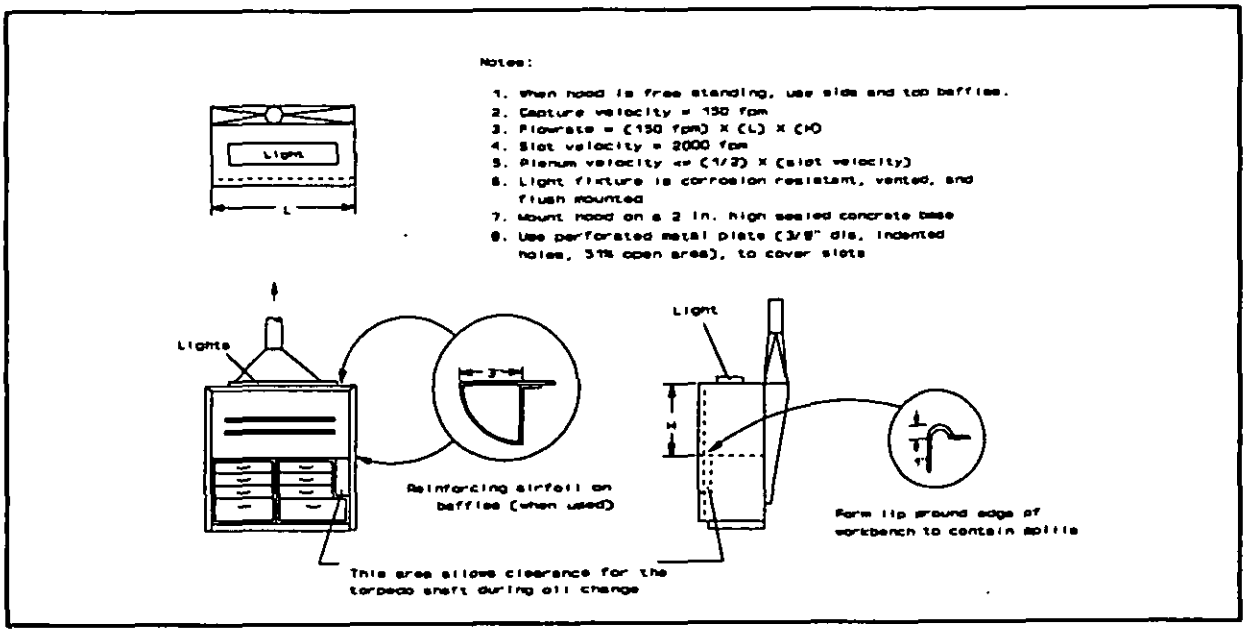

Figure 23
MK-46 Workbench Hood

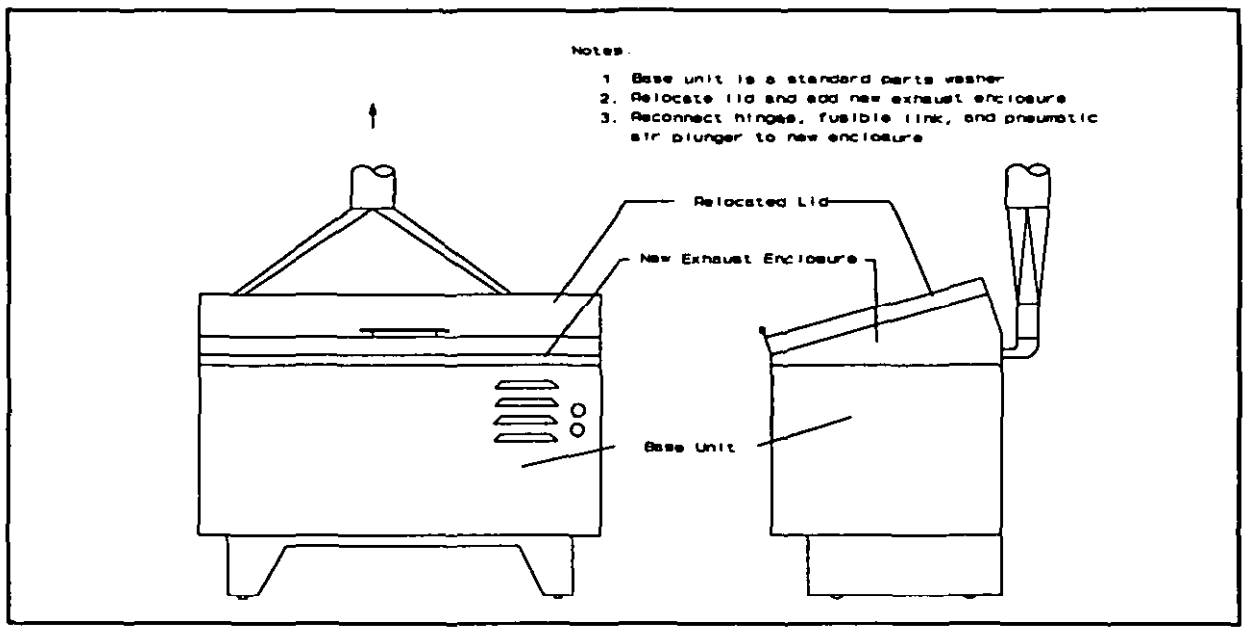

Figure 24
MK-46 Parts Washer Hood

4.3.2 MK-48 Ventilated Spaces. The floor plan shown in Figure 25 optimizes the work path while allowing the ventilation system to control airborne contaminants. Obtain detailed MK-48 exhaust hood drawings from Naval Underwater Systems Center, Code 8113.

4.3.2.1 MK-48 Afterbody Teardown Hood. Workers uncouple the fuel section and the engine section of the torpedo in the teardown operations. During these operations, Otto Fuel II remains in the lines and the components of the engine section, and in the fuel tank. The residual fuel releases vapor into the air. Design the afterbody teardown hood as shown in Figure 26 to capture Otto Fuel II vapor. Design the hood using the following criteria:

a) Design the hood with baffles on the top and side forming a booth.

b) Specify a 3 inch (76 mm) airfoil on the outer edge of the hood. The airfoil, bent inward from the baffle, must provide an airfoil effect and prevent turbulence and backflow.

c) Install lighting that is vented and flush mounted in the overhead baffle as shown Figure 26.

d) Bolt the hood to the floor, using a continuous natural rubber gasket on hood bottom to create a seal between the hood and the floor.

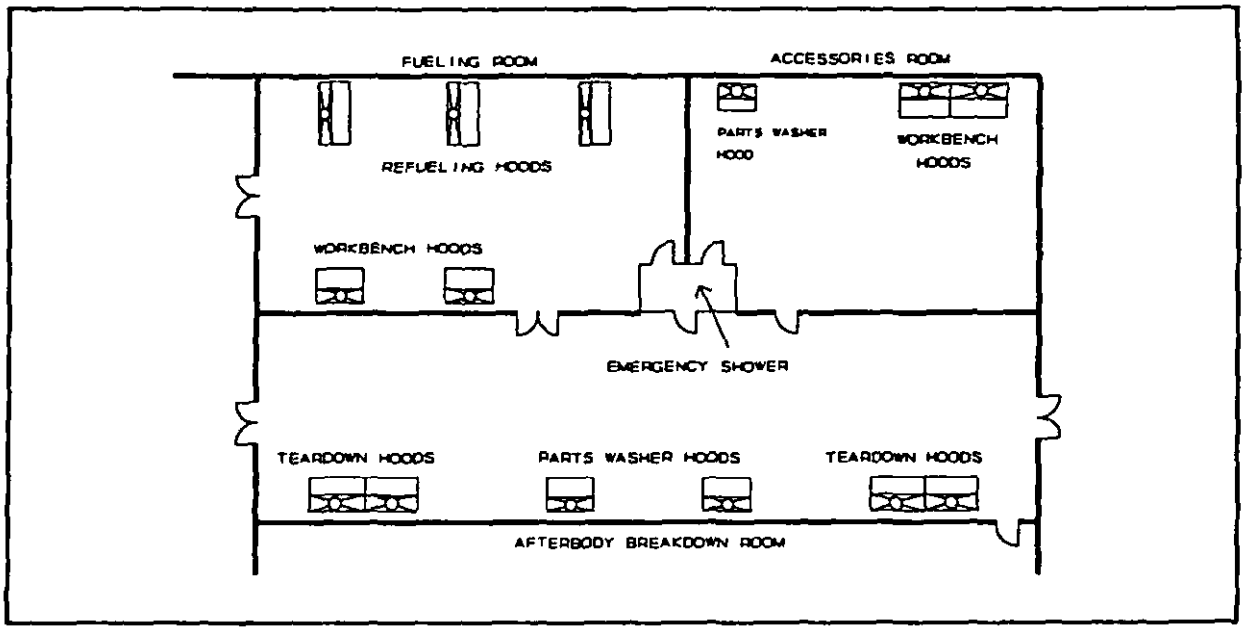

Figure 25
Typical MK-48 Ventilated Space Layout

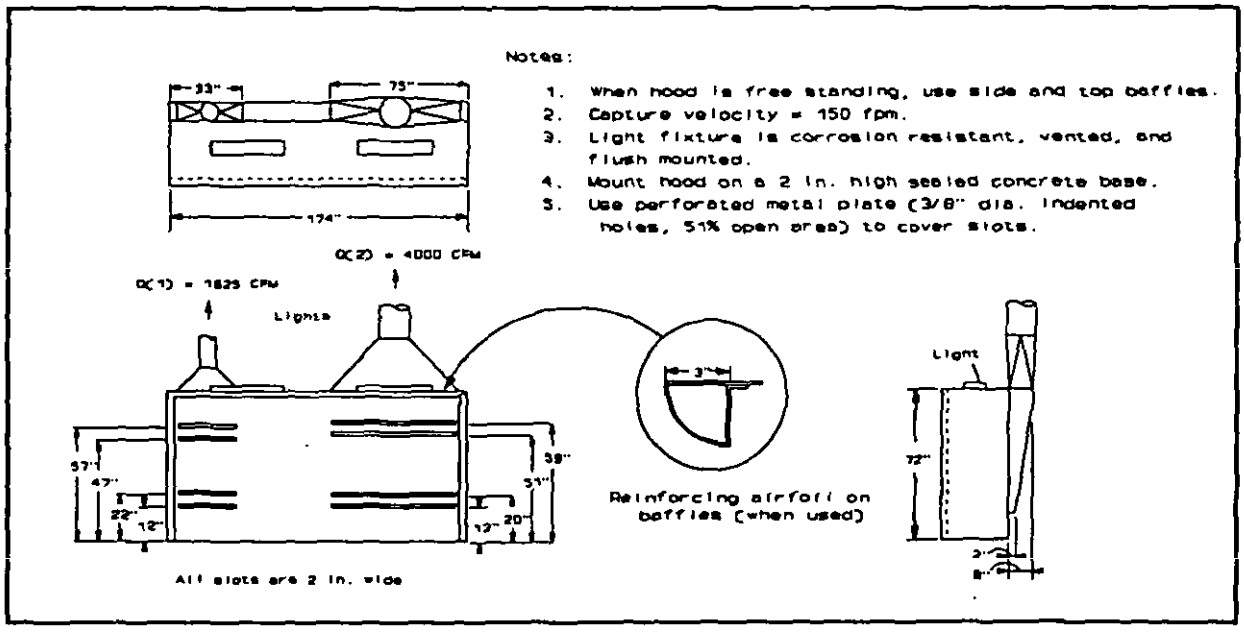

Figure 26
MK-48 Afterbody Teardown Hood

4.3.2.2 MK-48 Workbench Hood. After defueling and decoupling, personnel dismantle and inspect the fuel tank and the engine section. They then load components of the fuel tank and the engine section into the parts washer. Design a backdraft exhaust hood as illustrated in Figure 27 to control contaminants generated by these workbench operations. Specify the following criteria for workbench hoods:

a) Provide a 72 by 24 inch (185 x 60 cm) stainless steel workbench top to support the whole exhaust hood. Refer to Figure 28 for dimensions of the hoods.

b) Specify a 3 inch (76 mm) airfoil rotated inward to prevent turbulence and backflow.

c) Install lighting that is vented and flush mounted in the top of the exhaust hood.

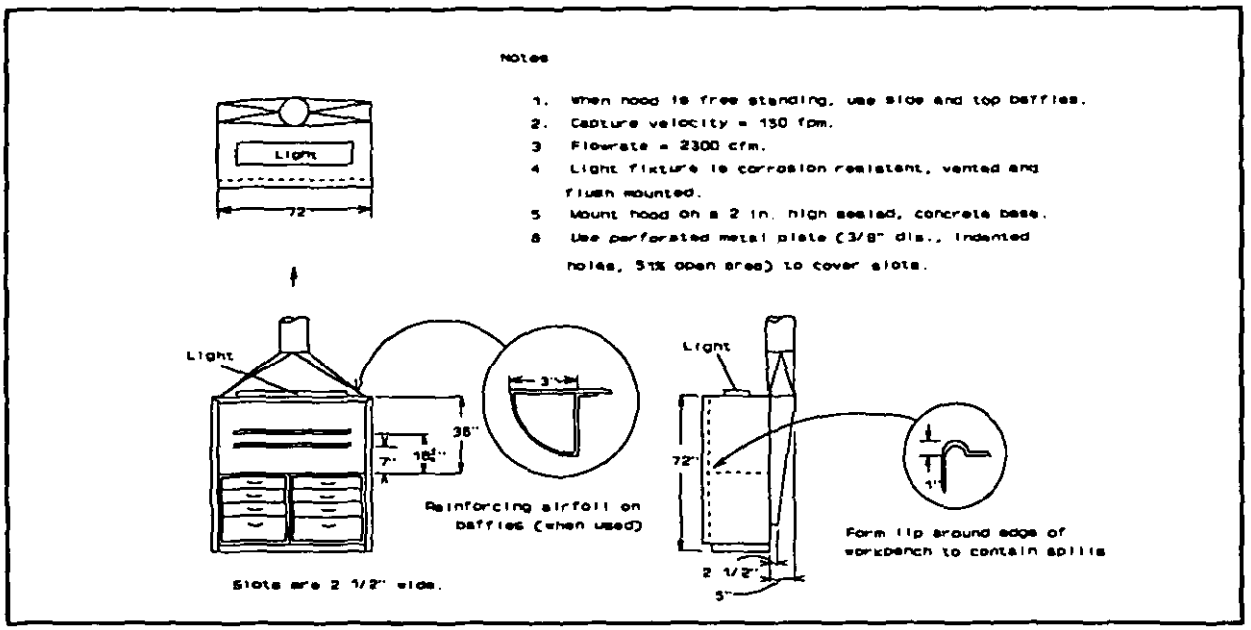

Figure 27
MK-48 Workbench Hood

4.3.2.3 MK-48 Parts Washer Hood. Design or modify the parts washers as shown in Figure 28 to clean off oils and excess Otto Fuel II from torpedo components. Specify the following criteria for the parts washers:

a) Provide a new fabricated enclosure to mount on top of the parts washer.

b) Relocate the cover with a pneumatic plunger and a fusible link assembly.

c) Provide an automatic switch to turn on the exhaust fan when the cover is opened and to turn off the exhaust fan when the cover is closed.

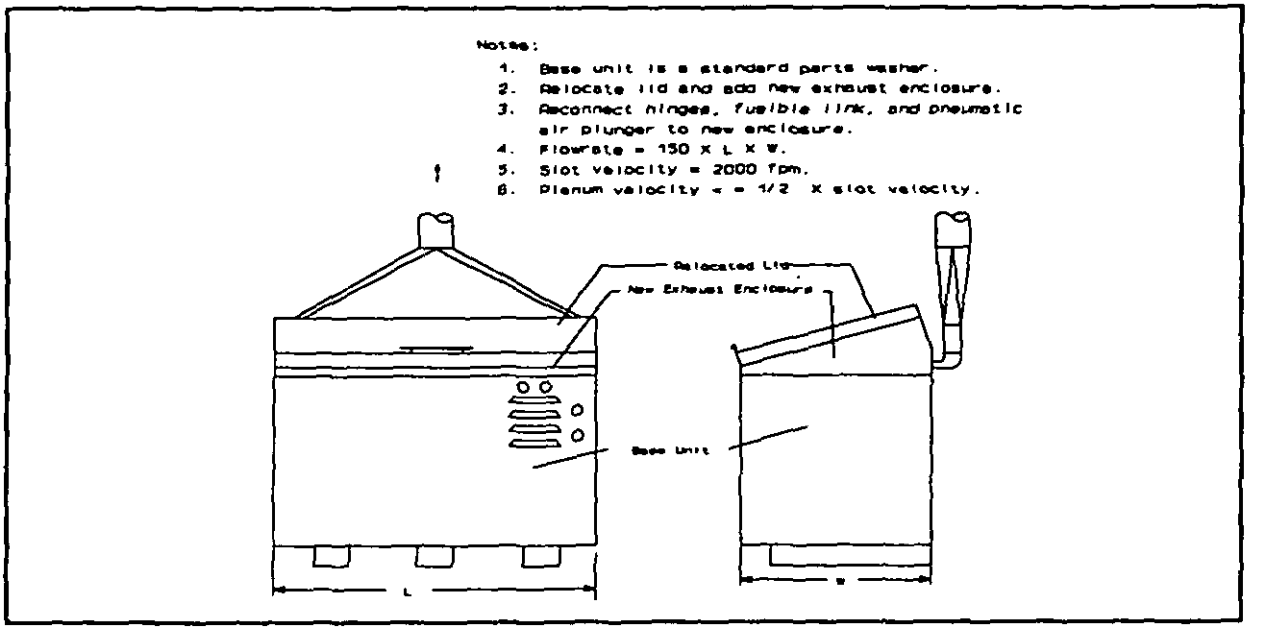

Figure 28
MK-48 Parts Washer Hood

4.3.2.4 Workflow in Afterbody Teardown Room and Accessories Room. Figure 29 illustrates the workflow in both the afterbody teardown room and the accessories room with the proper sequence of hoods.

4.3.2.5 MK-48 Refueling Hood. Before refueling, personnel connect the hoses from the fueling equipment to the fuel tank. Once the fueling operation has begun, the operator does not need access to the fuel tank, except to see the hose connections. Therefore, design an enclosing type hood to reduce ventilation rates and decrease the potential for exposure to a spill during fueling. Design the hood as illustrated in Figure 30. Specify the following criteria for the refueling hoods:

a) Specify a 3 inch (76 mm) airfoil rotated inward to prevent turbulence and backflow.

b) Install lighting that is vented and flush mounted in the top of the exhaust hood.

c) Bolt the hood to the floor, using a continuous natural rubber gasket on hood bottom to create a seal between the hood and the floor.

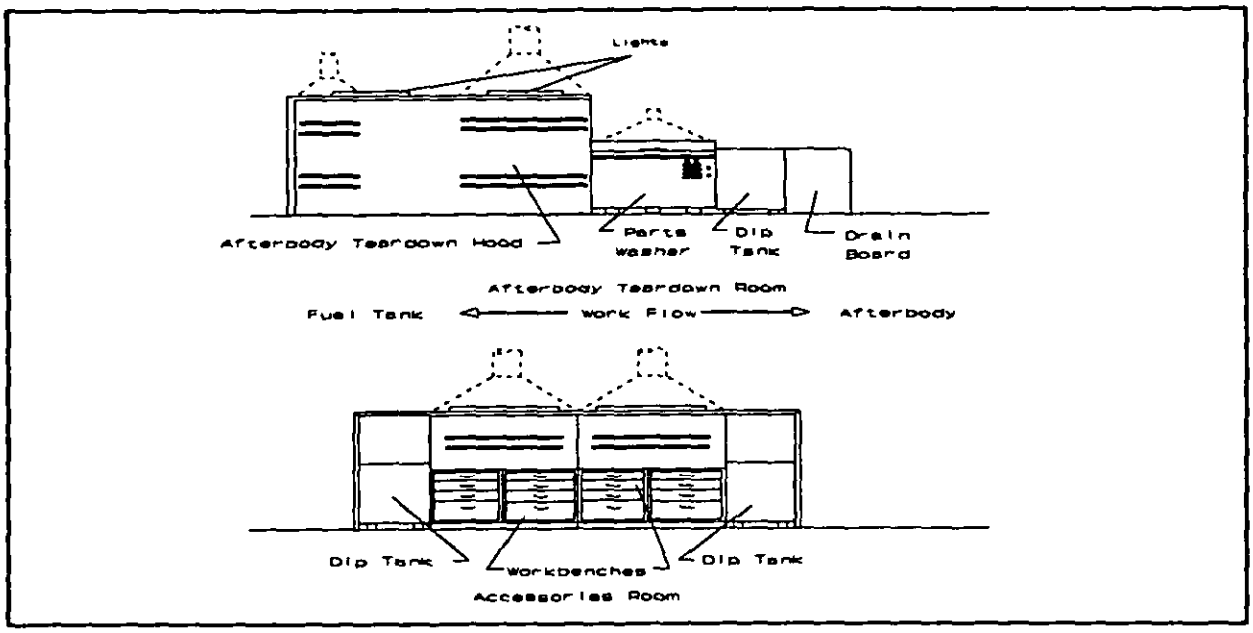

Figure 29
MK-48 Sequence of Hoods in Afterbody Teardown and Accessories Rooms

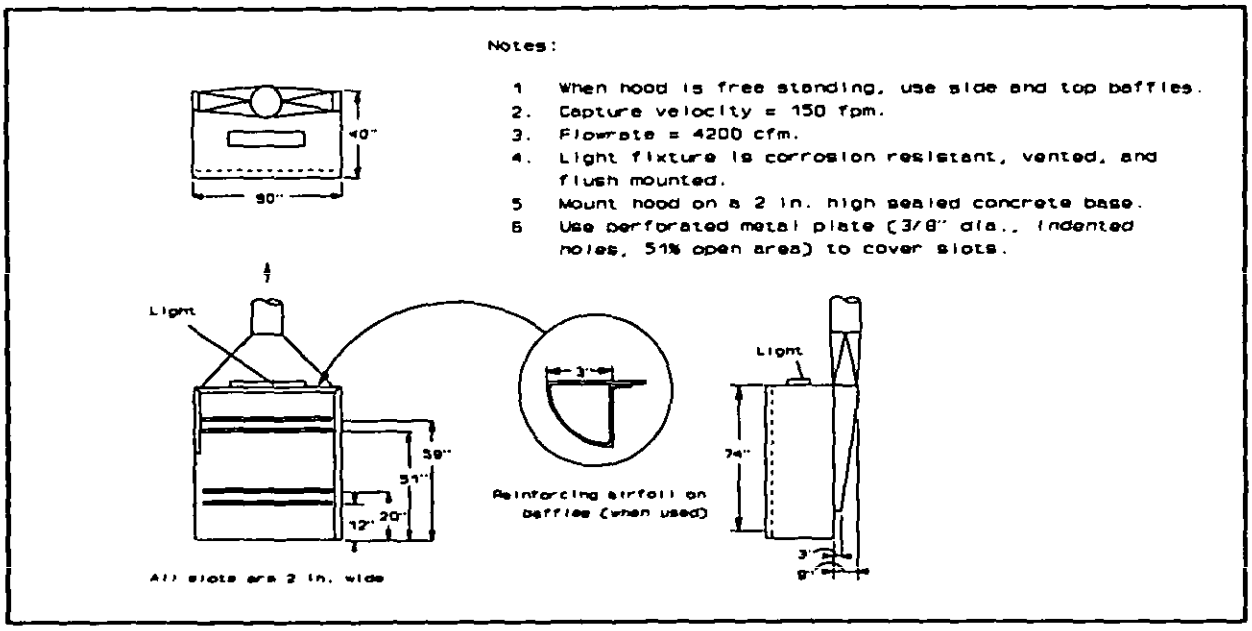

Figure 30
MK-48 Refueling Hood

4.3.3 Ductwork and Fans. All criteria in para. 2.1.3 apply to both MK-46 and MK-48 shops.

4.3.3.1 Ductwork. Design ductwork according to criteria established in para. 2.1.3.1 of this handbook, and the following:

a) Fabricate all ductwork in contact with Otto Fuel II vapors with (black) carbon steel. Require all joints be butt welds, angle or bar flanges.

b) Size the duct to maintain a minimum transport velocity of 2500 fpm (12.7 m/s).

4.3.3.2 Fans. Select fans according to criteria in para. 2.1.3.2. Backward inclined airfoil fans are the most efficient and quiet, but a centrifugal fan with backward inclined blades is also acceptable.

4.3.4 Weather Stack Design and Location. Utilize a vertical discharge stack with no loss stackhead for Otto Fuel II operations exhaust air. Refer to para. 2.1.3.3 for further considerations.

4.3.5 Air Cleaning Devices. Due to the quantities and types of contaminants generated by these processes, there is no requirement for air pollution control equipment.

Because Otto Fuel II exhaust is not filtered, proper dispersion from the stack is critical. To obtain good dispersion, the stack discharge velocity must be at least 1.5 times the average wind velocity. For example, when the average local wind velocity is 18.9 miles per hour (8.45 m/s), the stack discharge velocity must be at least 2500 fpm (12.7 m/s).

Discharge the contaminants from the stack at a minimum ground to exit distance of 1.5 times the building height. Use taller stacks to ensure good dispersion when the facility is located in hilly terrain or near taller buildings.

4.4 Replacement Air. Design replacement air systems to maintain a pressure (relative to the atmosphere) ranging from -0.02 to -0.06 inches wg (-5.0 to -14.9 Pa) in the dirty spaces. Maintain the clean spaces at a differential pressure ranging from +0.01 to +0.05 inches wg (2.49 to 12.4 Pa).

4.4.1 Quantity and Distribution. Distribute air to produce laminar flow of air from supply to exhaust in the work space. Use vertical supply distribution method as shown in Figure 31. Horizontal supply distribution method as shown in Figure 32 is adequate if, and only if, all exhaust hoods are located on the wall opposite the supply plenum. See section 2.1.3.5 for detailed criteria.

4.4.1.1 Vertical Distribution Method. Design a drop ceiling with perforated plate to form a plenum according to section 2.1.3.5.

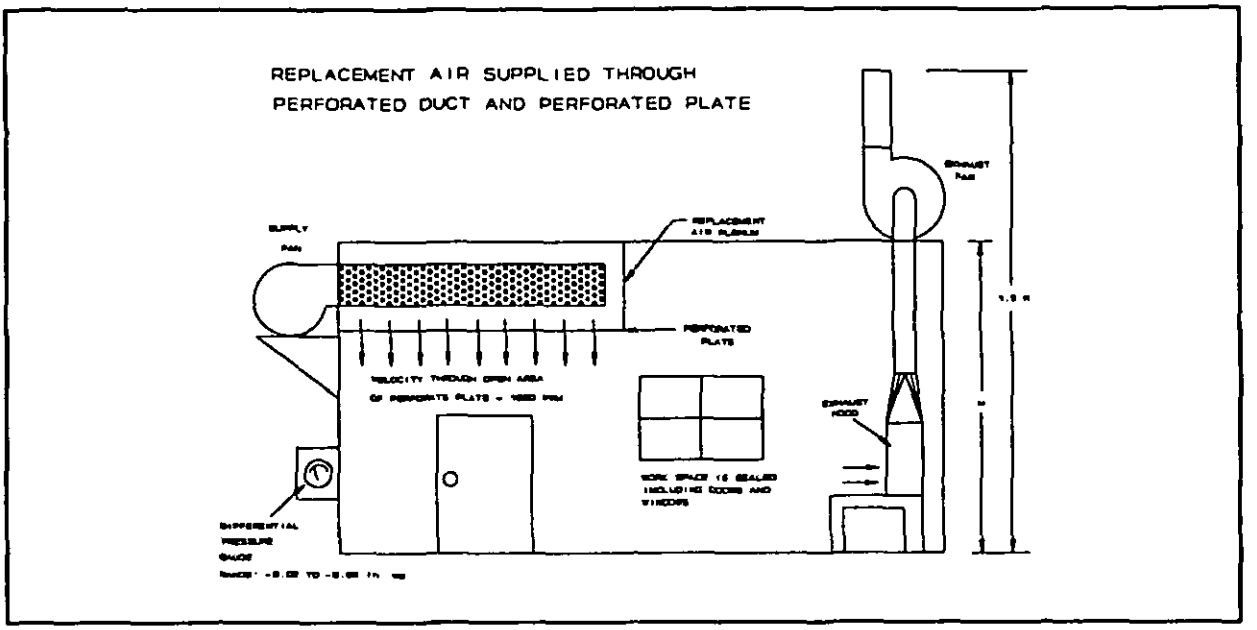

Figure 31
Vertical Distribution Method

4.4.1.2 Horizontal Distribution Method. Design the wall plenum to cover the entire wall opposite the hoods. Size the open area of the perforated sheet for 2000 fpm through the holes. For example, if the supply air flowrate is 13200 cfm, and the face area of the plenum is 128 square feet, then the open area is (13200 cfm/2000 fpm) 6.6 square feet. This is equivalent to (6.6 square feet/128 square feet) 5 percent open area. See Figure 32 for more details.

4.4.2 Heating and Air Conditioning. Design heating, air conditioning, and humidity control according to NAVFAC DM-3.03. Temper the replacement air to provide a minimum winter design temperature of 65 degrees Fahrenheit (18 degrees Celsius) and a maximum summer design temperature of 75 degrees Fahrenheit (24 degrees Celsius), with a maximum relative humidity of 50 percent.

Do not separate the air conditioning system from the replacement air system. Do not bypass the replacement air system and add cold conditioned air directly into a room, because it will create difficulties in maintaining the negative pressure in the room. Cool the replacement air.

Refer to para. 2.1.4 for criteria on heat recovery systems. Do not recirculate exhaust air.

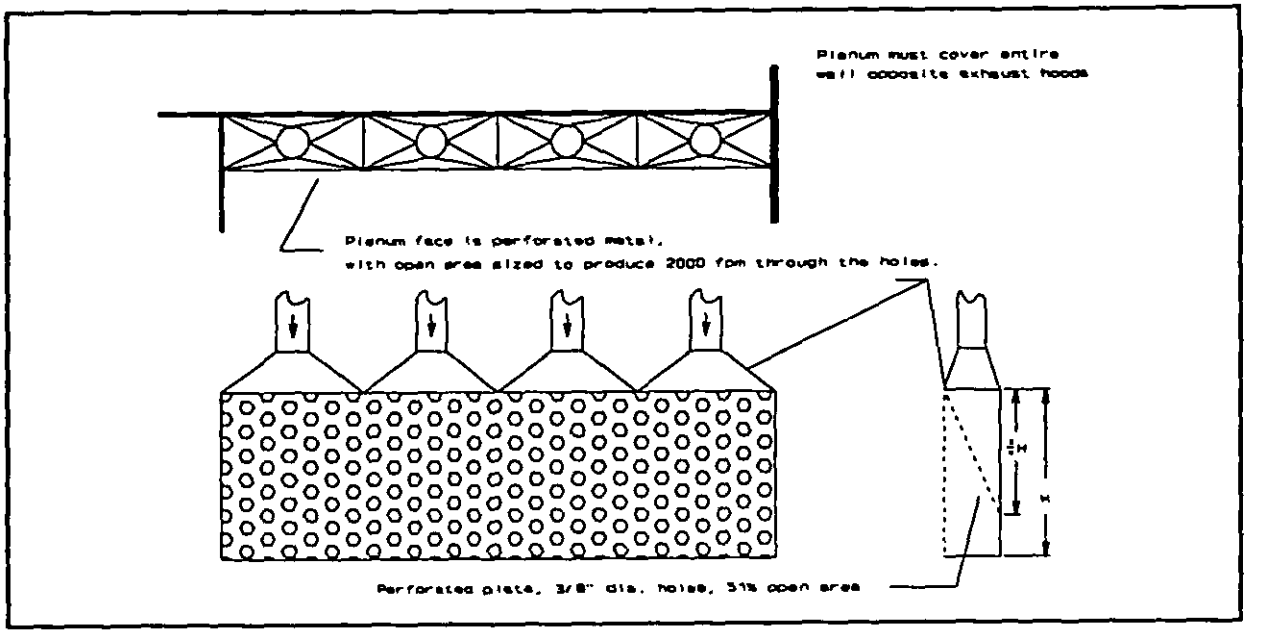

Figure 32
Horizontal Distribution Method

4.5 System Controls. Design system controls according to para. 2.1.3.6 and the following criteria:

a) Position an annunciator panel at the entrance to the dirty space so operators can monitor operating gauges.

b) Install differential pressure sensors at locations that are representative of average static pressure in each controlled space. This will ensure that desired differential pressures are maintained.

c) Trigger a timer if the pressure varies from the specified range. Select a timer that automatically resets if the problem is corrected within 60 seconds.

d) Trigger both visible and audible alarms if the system cannot correct the difficulty within the allotted time.

4.6 Safety and Health Items. 29 CFR 1910 and Bureau of Naval Medicine (NAVMED) P-5112, The Navy Environmental Health Bulletins require specific criteria for the safety and health of operators. Provide combination emergency eyewash and deluge showers (see Figure 33) in the immediate area of Otto Fuel II use. Refer to ANSI Z358.1, Emergency Eyewash and Shower Equipment for performance requirements on combination units. Design criteria include:

a) Locate combination units within 10 seconds and 100 feet (30 m) of the potential hazard. Do not allow a wall or door to separate showers from the hazard. Locate showers at a safe distance from electrical apparatus and power outlets, and as far away as possible from the contamination source.

b) Position valves so that they can be turned on easily and will remain actuated until a deliberate effort is made to turn them off. Hand or foot valves are acceptable.

c) Provide line sumps to contain deluge shower discharge.

d) Provide an alarm horn to alert fellow workers of hazard.

e) Provide an auxiliary face spray ring on the eyewash.

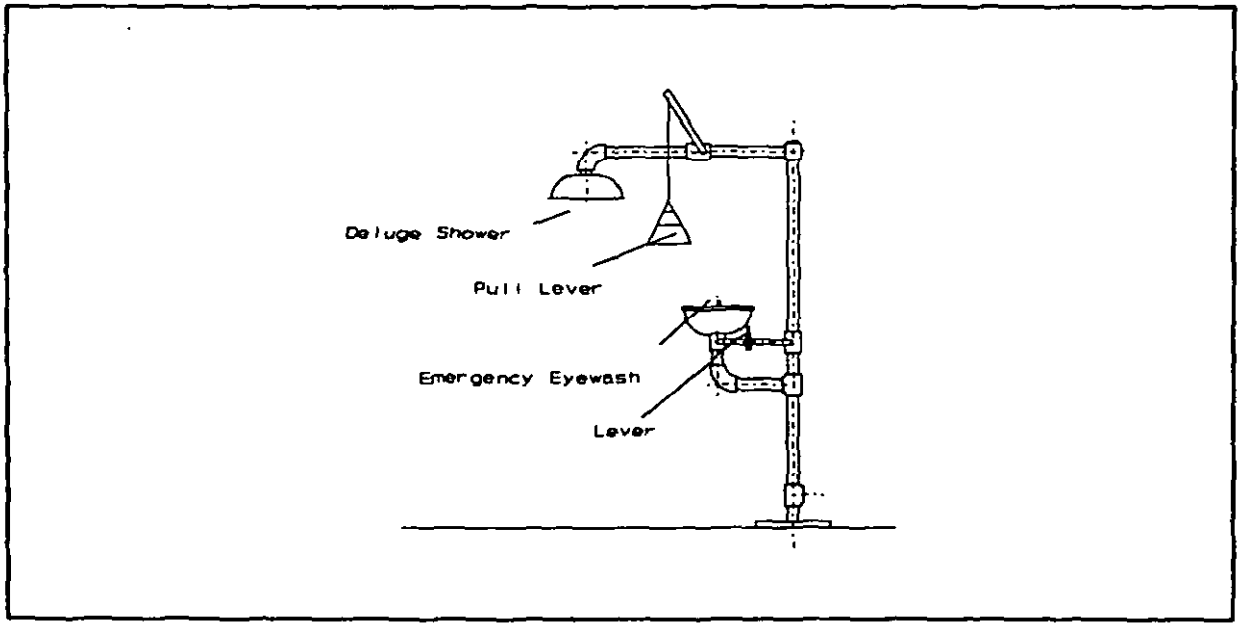

Figure 33
Emergency Eyewash and Deluge Shower

Section 5: METAL CLEANING AND ELECTROPLATING

5.1 Function. At metal cleaning and electroplating facilities, personnel clean (both chemically and mechanically) metal parts and equipment, chemically treat, chemically coat, and electroplate during rework. Refer to ANSI Z9.1, Practices for Ventilation and Operation of Open-Surface Tanks for additional information.

5.1.1 Design Criteria. Design the facility using general technical requirements in Section 2 of this handbook and the specific requirements in this section.

5.2 Operational Considerations.

5.2.1 Chemical Cleaning and Electroplating. Contaminants rise from the open surface tanks used in metal cleaning and electroplating operations. The best method of protecting the shop workers from these contaminants is to enclose the tanks as much as possible, while still allowing adequate operator access.

Equip tanks, which are inactive for long periods, with tank covers to inhibit the spread of any contaminant vapors. Equip tanks, which are used for long duration processes with tank covers.

Most electrochemical processes operate at temperatures in excess of 100 degrees Fahrenheit (37.7 degrees Celsius). The heat generated makes air conditioning economically unfeasible. Do not use propeller or pedestal fans to provide heat relief, they generate high velocity air currents and destroy the effectiveness of the ventilation systems.

29 CFR 1910.1000 regulates employee exposure to airborne contaminants. 29 CFR 1910.94(d) gives specific requirements intended to protect the health of the worker in metal cleaning and electroplating shops.

WARNING: Do not mix acids and cyanides. The mixture generates toxic hydrogen cyanide gas. Isolate areas under cyanide process tanks from areas under acid tanks by sumps or berms. The cyanide spill containment capacity shall equal 110 percent of the capacity of the largest cyanide process tank in the containment area.

5.2.2 Mechanical Cleaning (Buffing, Grinding, and Polishing). Mechanical cleaning includes buffing, grinding, and polishing. Material from the workpiece and the grinding wheel break off to form a potential respiratory hazard. The larger particles can also act as projectiles. 29 CFR 1910.94(b) regulates these processes to protect workers from the hazards.

5.3 Exhaust Systems.

5.3.1 Chemical Cleaning and Electroplating Hood Design. Personnel perform most operations in chemical cleaning and electroplating facilities in open tanks, vats, or pots. Categorize exhaust hoods as one sided lateral, push-pull, pull-pull, or enclosing type. Use Figure 34 to determine the appropriate type of exhaust hood. Push-pull and enclosing type exhaust hoods require 50 to 70 percent less airflow compared to pull-pull hoods. This allows significantly reduced operating costs, while providing the same contaminant control.

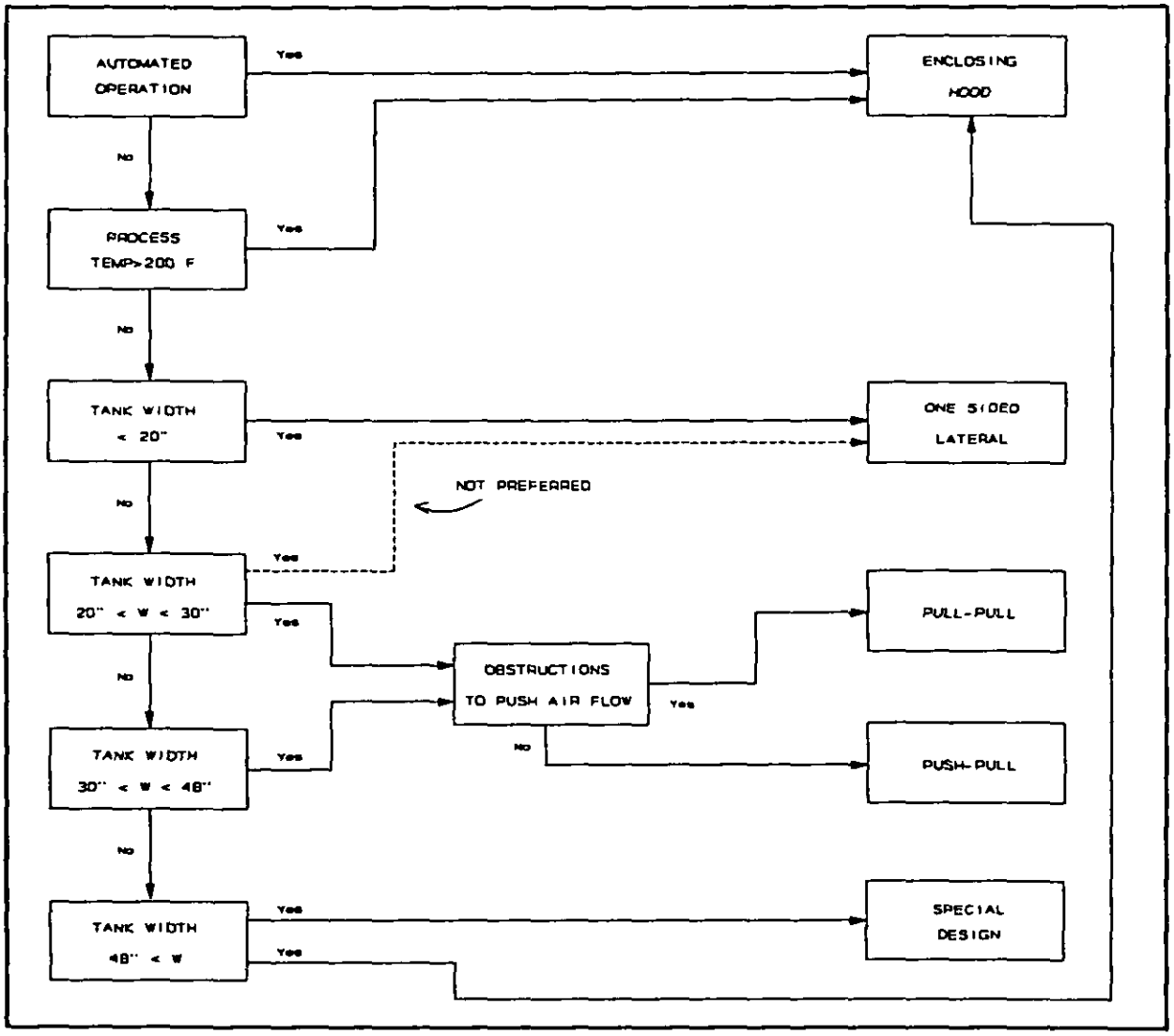

Figure 34
Decision Process for Open Surface Tank Hoods

The toxicity and rate of generation of contaminants will vary from process to process, therefore use different ventilation rates. Assign each tank a hazard class from A-1 to D-4, with A-1 the most hazardous. Refer to the ACGIH Manual, Tables 10.70.6 through 10.70.8 for the hazard classes of several common plating solutions.

For solutions not listed there, refer to the ACGIH Manual, Table 10.70.1, Determination of Hazard Potential, and Table 10.70.2, Determination of Rate of Gas, Vapor, or Mist Evolution. Also, refer to ANSI Z9.1, Appendix A - Chemical Data, and Tables A3 through A5. Have the cognizant industrial hygiene office determine the hazard class for each tank.

Provide low pressure agitation using a low pressure air circulator as shown in Figure 35 to reduce mist generation associated with compressed air agitation.

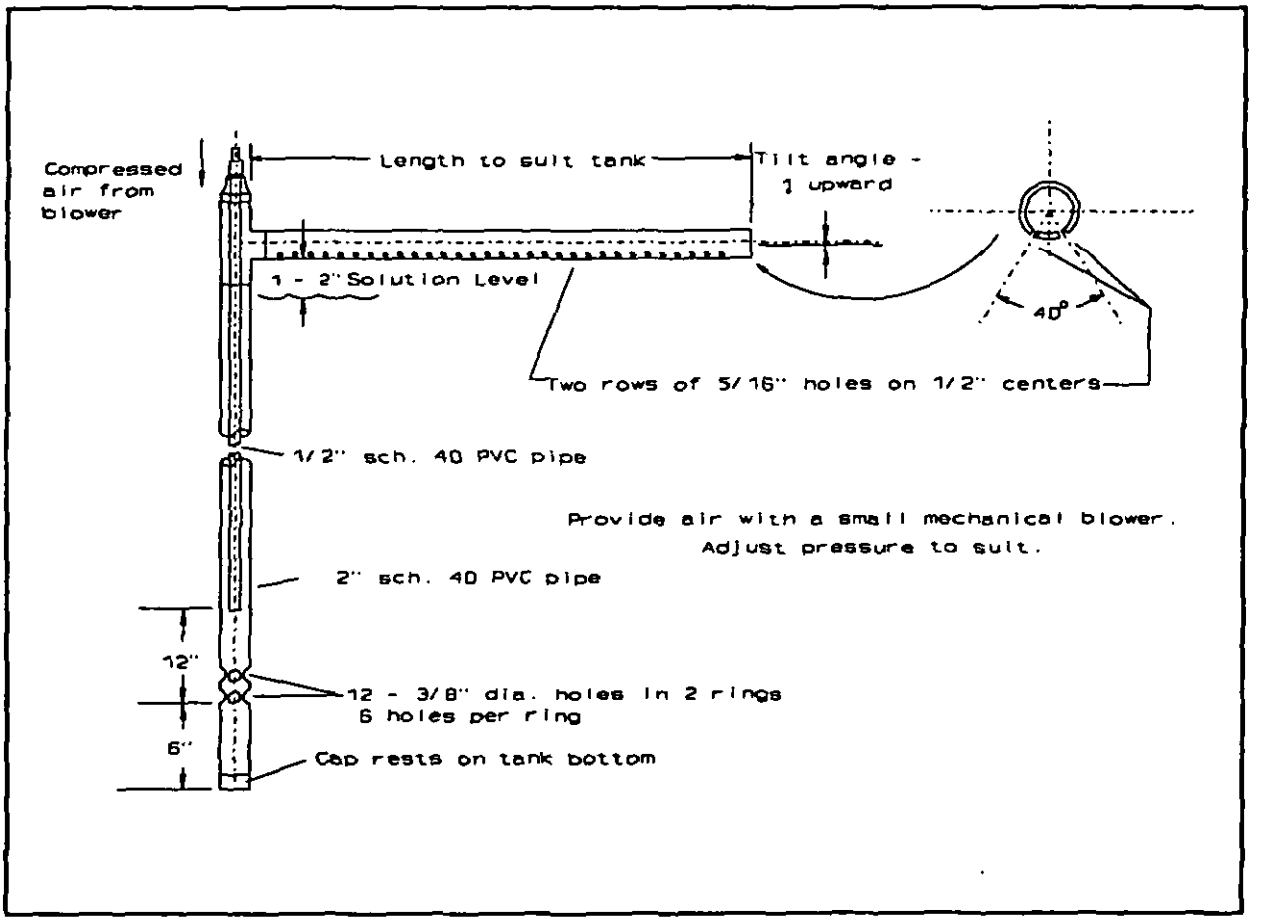

Figure 35
Air Agitator for Open Surface Tanks

The following criteria apply to all exhaust hood types for all open surface tanks. Refer to Figure 36 for details.

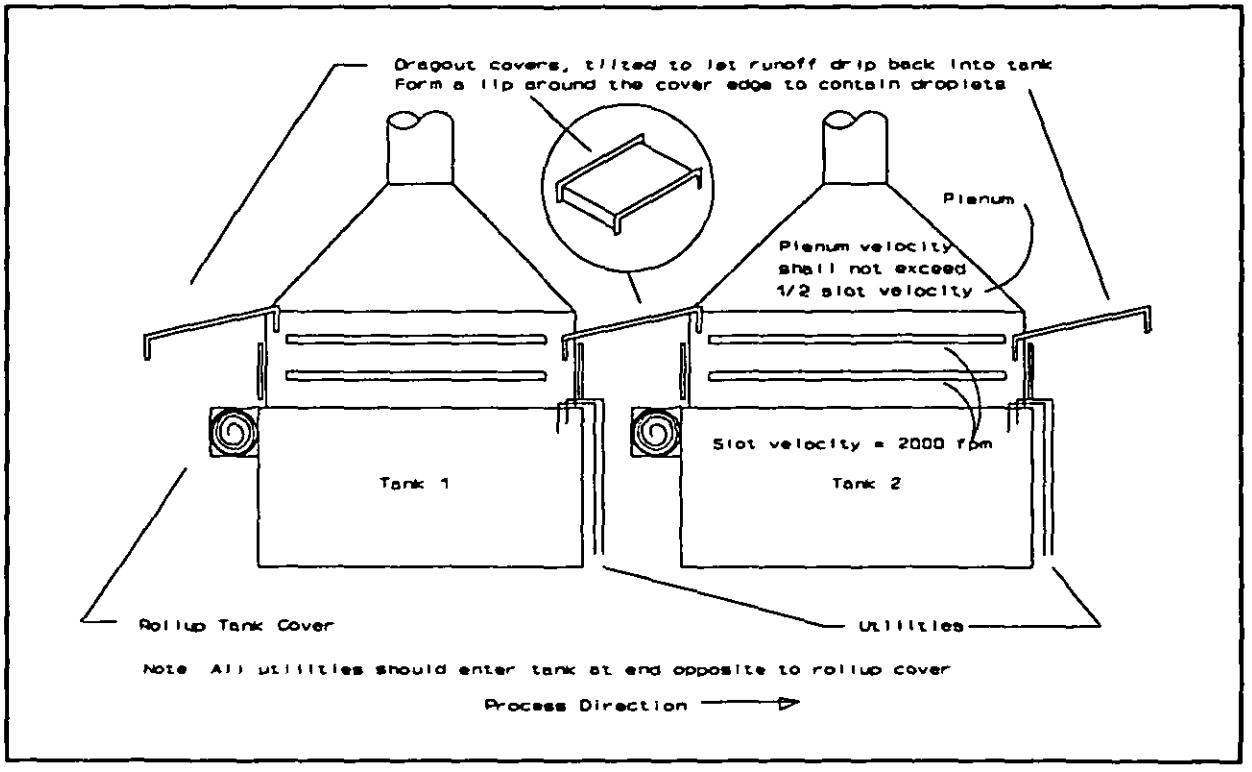

Figure 36
Hood Optimization Features

a) Install vertical plates as side baffles perpendicular to the hood face. Size the baffles for a minimum height (above the tank lip) of 12 inches, and the length equal to the tank width. Construct the baffles of a material that does not chemically react with the tank solution.

b) Install vertical plates as back baffles on the top of free standing hoods. Size the baffle for the entire length of the tank, with the top of the baffle as high as the tank is wide. For pull-pull type hoods, the top of the baffle shall be as high as half the tank width. Construct the baffles of a material that does not chemically react with the tank solution.

c) Position dragout covers between two adjacent tanks, overlapping the baffles, and sloping toward the first tank. Construct the covers out of the same material as the baffles. Baffles and dragout covers must be easily removable for utility maintenance.

d) Construct tank covers of a material that does not chemically react with the process chemicals and operating conditions. Use tank covers on all processes when feasible. Good candidates for covers are caustic cleaning, solvent vapor degreasing, and acid cleaning.

e) Design slots for an air velocity of 2000 fpm (10.2 m/s) in all exhaust hoods.

f) Design exhaust hood plenum velocity equal or less than to one half of the slot velocity (i.e., plenum velocity shall not exceed 1000 fpm (5.1 m/s)).

5.3.1.1 Lateral Exhaust Hoods. Figures 37 through 41 illustrate several lateral exhaust hood configurations. Use the configurations shown in Figures 37, 38, and 39 whenever possible, since the plenum and transition act as baffles to room air currents.

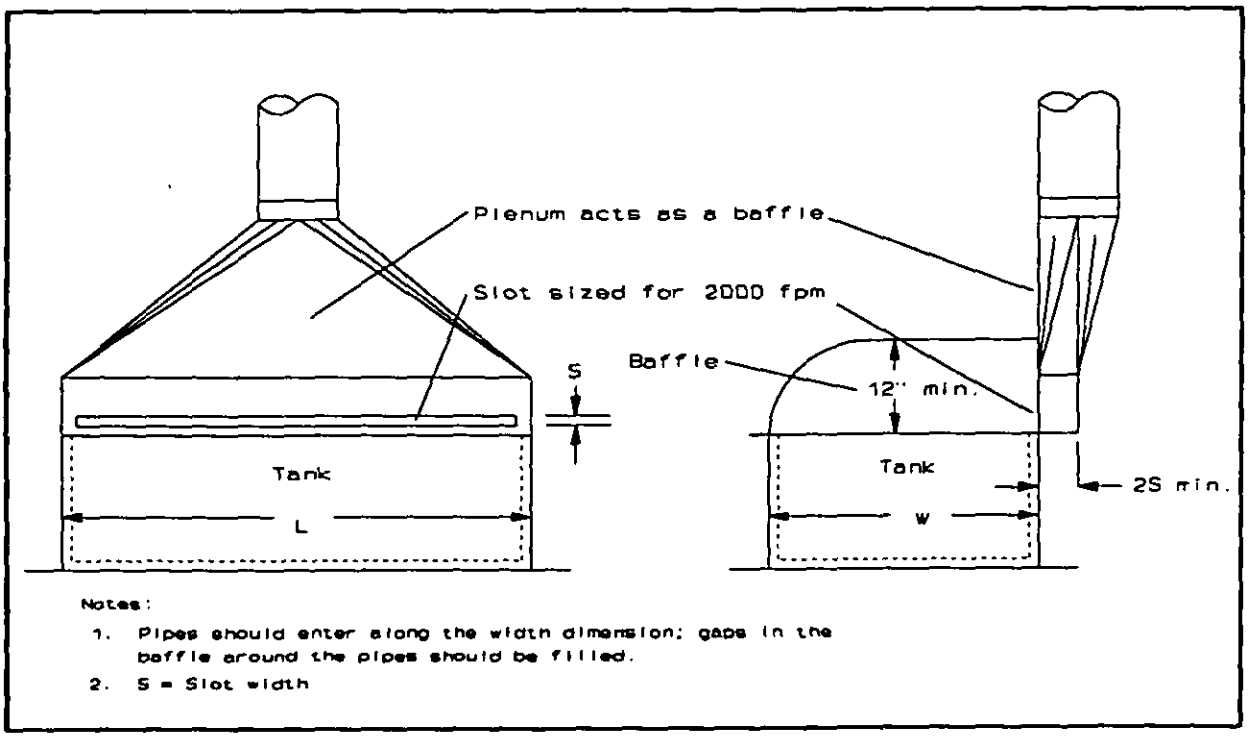

Figure 37
Lateral Exhaust Hood with Upward Plenum and Transition

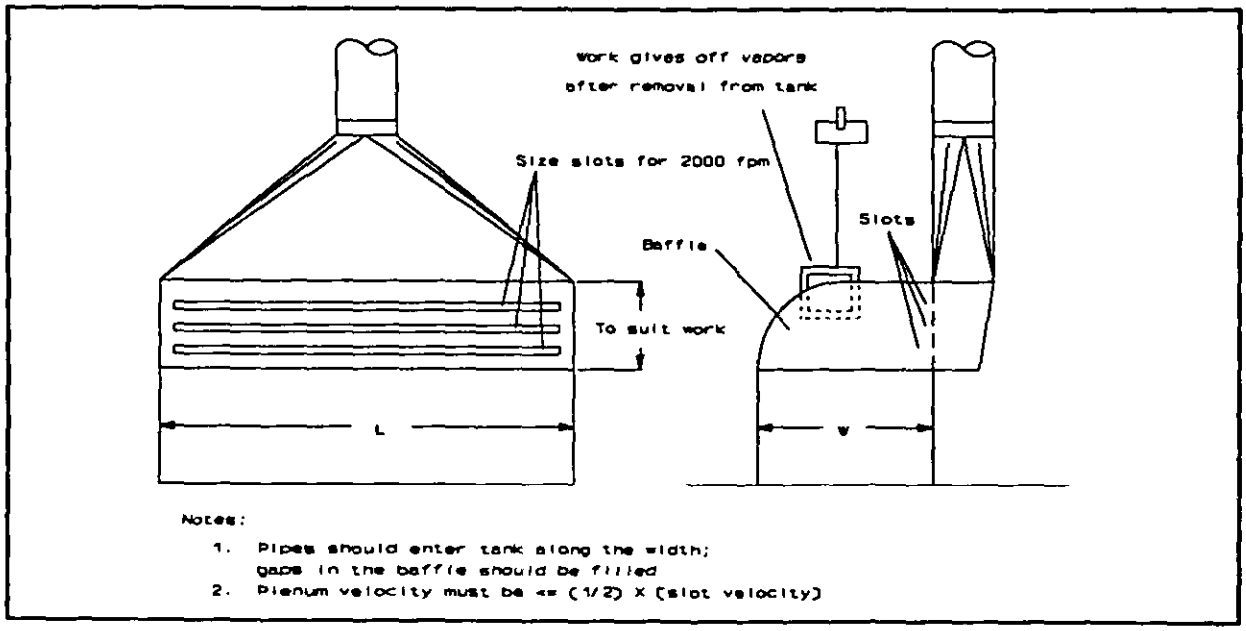

Figure 38
Lateral Exhaust Hood for Pickling Tank

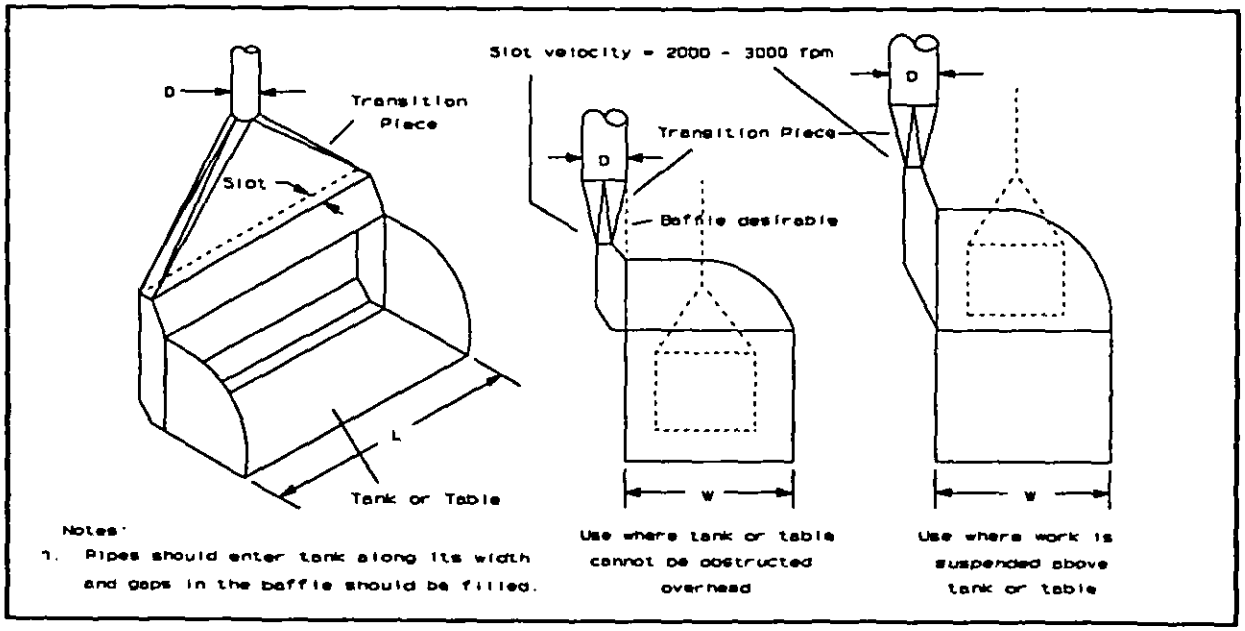

Figure 39
Lateral Hood for Solutions with a High Vaporization Rate

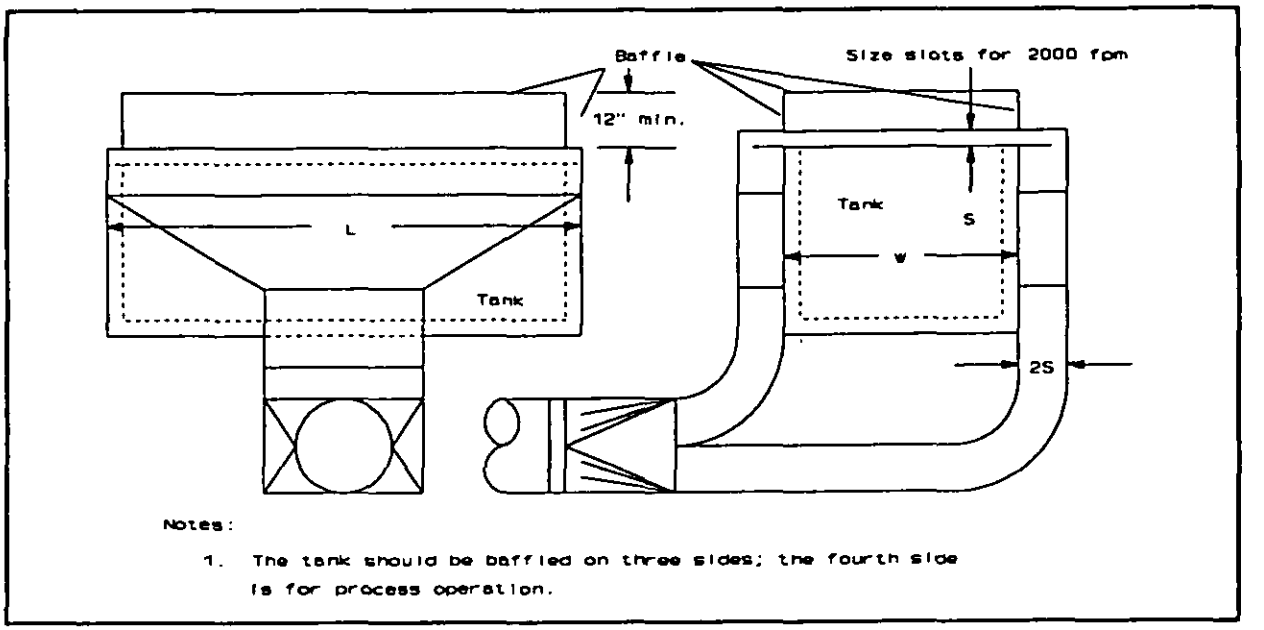

Figure 40
Lateral Exhaust Hood with Downward Plenum

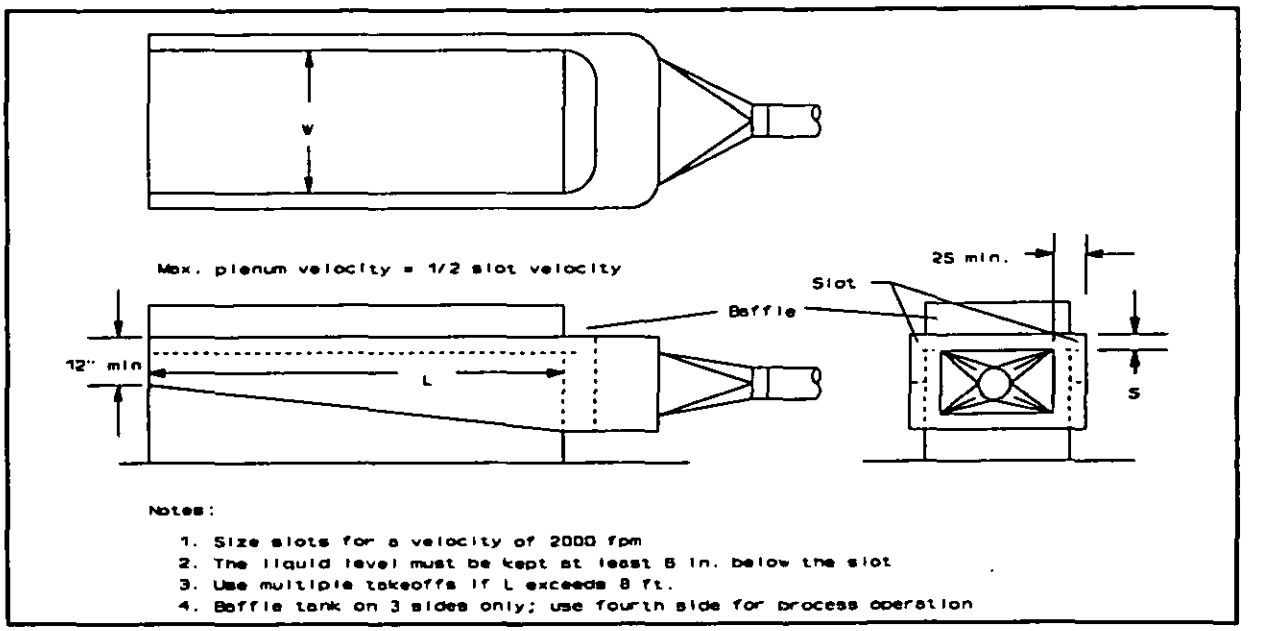

Figure 41
Lateral Exhaust Hood with End Takeoff

Figure 42 illustrates a hood for a solvent degreasing tank. Note how the exhaust plenum in Figure 42 (squared plenum) differs from the exhaust plenum in Figure 41 (tapered plenum). The solvent degreasing tank exhaust plenum will function properly, even though it is not tapered, because of its relatively low (500 fpm (2.54 m/s)) velocity. If the velocity or air volume over a degreasing tank is too high, the solvent vapor may be drawn into the duct, greatly increasing the loss of solvent.

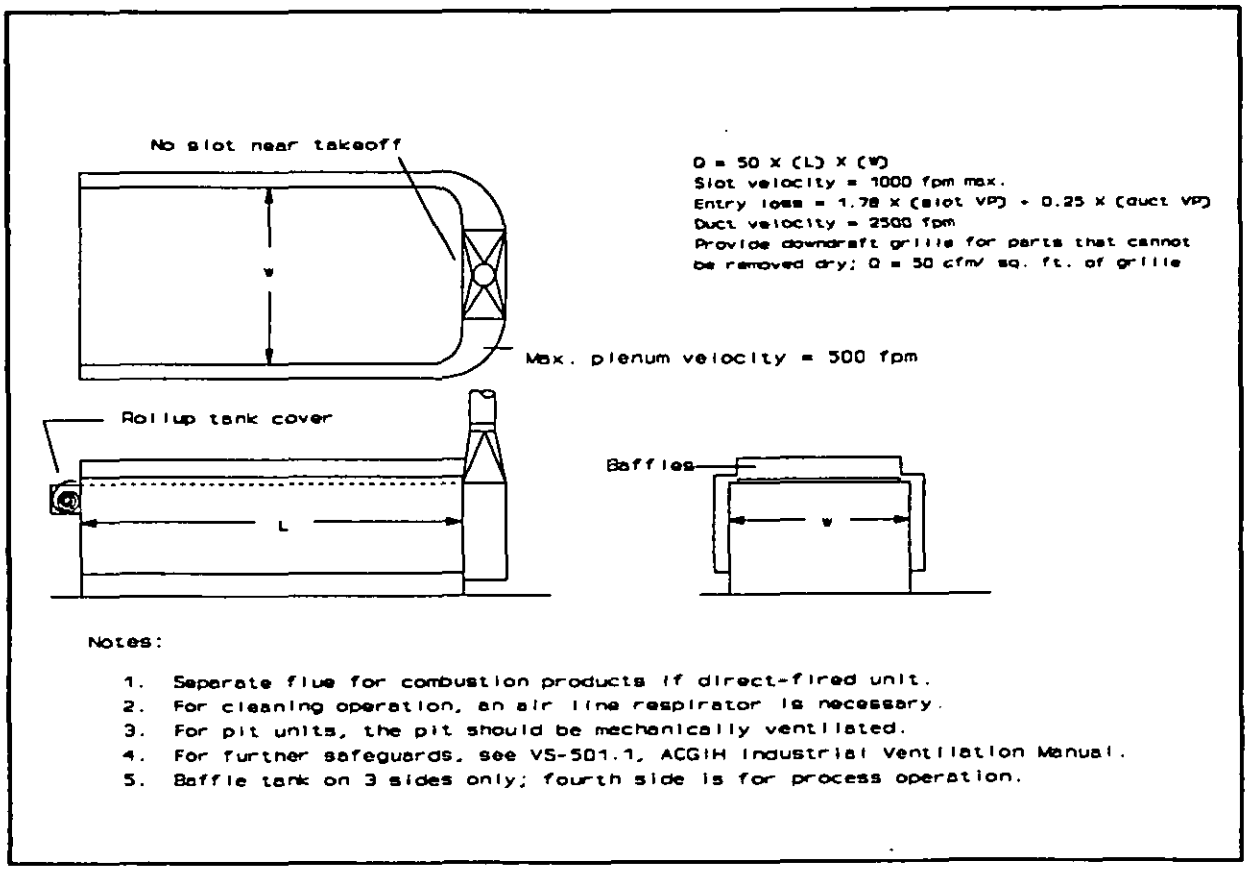

Figure 42
Lateral Exhaust Hood for Solvent Degreasing Tank

Determine the hazard class, as described in paragraph 5.3.1 to determine the required exhaust volume for a given tank. Use Table 2 to determine the corresponding capture velocity.

Table 2
Minimum Capture Velocities for Lateral Exhaust Hoods in Undisturbed Air

Hazard Class	Capture Velocity	
	fpm	(m/s)
A-1, A-2	150	(0.762 m/s)
A-3, B-1, B-2, C-1	100	(0.508 m/s)
B-3, C-2, D-1	75	(0.381 m/s)
A-4, C-3, D-2	50	(0.254 m/s)
B-4, C-4, D-3, D-4	General Room Ventilation	

Notes: 1) This table is for rooms with crossdrafts less than 75 fpm (0.381 m/s). Install baffles, relocate the tank, or redesign the replacement air system for crossdrafts greater than 75 fpm (0.381 m/s).

2) Use the next higher capture velocity to completely control water vapor from hot processes.

Use either Table 3 or Table 4, depending on whether or not the tank is baffled, to determine the exhaust flow rate in cfm per square foot of tank surface area. Multiply this figure by the actual surface area of the tank to obtain the exhaust flow rate.

Table 3
Minimum Volume Rates Required for Lateral Exhaust Hoods
without Baffles in cfm per square foot
(cubic meters per second per square meter)
of Tank Surface Area

Required Minimum Capture Velocity		Tank Width/Length (W/L) Ratio			
fpm	(m/s)	0.00-0.09	0.10-0.24	0.25-0.49	0.50-1.00
150	(0.762)	225(1.14)	250(1.27)	250(1.27)	250(1.27)
100	(0.508)	150(0.762)	175(0.889)	200(1.02)	225(1.14)
75	(0.381)	110(0.559)	130(0.660)	150(0.762)	170(0.863)
50	(0.254)	75 (0.381)	90 (0.457)	100(0.508)	110(0.559)

Notes: 1) Use W/2 as tank width for tank with manifold along the centerline or with hoods on two parallel sides (pull-pull).

2) Use W/L = 1.0 for a circular tank with lateral exhaust manifold up to half the circumference.

3) Use W/L = 0.5 for a circular tank with lateral exhaust manifold over half the circumference.

Table 4
Minimum Volume Rates for Lateral Exhaust Hoods
with Baffles or Against a Wall in cfm per square foot
(cubic meters per second per square meter)
of Tank Surface Area

Required Minimum Capture Velocity		Tank W/L Ratio			
fpm	(m/s)	0.00-0.09	0.10-0.24	0.25-0.49	0.50-1.00
150	(0.762)	150(0.762)	190(0.965)	225(1.14)	250(1.27)
100	(0.508)	100(0.762)	125(0.635)	150(0.762)	175(0.889)
75	(0.381)	75 (0.381)	90 (0.457)	110(0.559)	130(0.660)
50	(0.254)	50 (0.254)	60 (0.254)	75 (0.305)	90 (0.457)

Notes: 1) These values are for hoods with baffles (including hoods with upward plenums) and hoods against a wall.

2) Use W/2 as tank width for tanks with hoods along the center line or on two parallel sides (pull-pull).

3) Use W/L = 1.0 (tank diameter) for a circular tank with lateral exhaust manifold up to half the circumference.

4) Use W/L = 0.5 (tank diameter) for a circular tank with lateral exhaust manifold over half the circumference.

5.3.1.2 Pull-Pull Exhaust Hoods. The pull-pull exhaust system has parallel hoods on opposite sides of an open surface process tank. Figures 40, 41, and 42 are pull-pull hoods.

Use the same method as for laterally exhausted tanks to calculate the required exhaust volume for a pull-pull system. Substitute (W/2)/L for W/L as the tank aspect ratio. This is because each hood effectively exhausts one half of the tank width.

5.3.1.3 Push-Pull Exhaust Hoods. Push-pull ventilation system consists of a push nozzle and an exhaust hood to receive the push jet. Properly used, the push jet intercepts contaminated air and carries it relatively long distances into the exhaust hood.

The principal advantage of a push-pull ventilation system is that the required exhaust air volumes are much lower than for laterally exhausted tanks. This results in energy savings. On the other hand, it is not easy to correctly design, install, and maintain push-pull ventilation system. Whenever practical, design, construct, evaluate, and adjust a pilot system before building the entire system.

In the design and placement of an open surface tank a number of variables must be considered. In some cases, placement in room, presence of crossdrafts or flat surface parts may require increased push and pull flow. Therefore, specify a 20 percent adjustability both in push and pull air volume flow rates. Lock the adjusting mechanism in place after balancing.

Do not use push-pull ventilation system for hard chrome plating processes. Buss bars and hanging parts interfere with push air jets.

Ensure that the height of the receiving exhaust hood, including any baffle, is at least one quarter of the tank width.

Following are the titles and Figure numbers for push-pull detail design criteria in the ACGIH Manual, Chapter 10:

Title	Figure No.
Push-Pull Hood Design Data for Widths up to 10 feet	VS-70-10
Design Data Push-Pull Hood	VS-70-11
Push Nozzle Manifold Pressure	VS-70-12

5.3.1.4 Enclosing Hood. An enclosing hood (see Figures 43 and 44) projects over the entire surface of the tank and encloses at least two sides. Refer to Table 5 to determine the capture velocity. Use the capture velocity and open area of the enclosure to calculate the required exhaust flow rate. Refer to Appendix A for a design problem example.

Table 5
Minimum Capture Velocities for Enclosing Hoods in Undisturbed Air

Hazard Class	One Side Open		Two Sides Open	
	fpm	(m/s)	fpm	(m/s)
A-1,A-2	100	(0.508)	150	(0.762)
A-3,B-1,B-2,C-1	75	(0.381)	100	(0.508)
B-3,C-2,D-1	65	(0.330)	90	(0.457)
A-4,C-3,D-2	50	(0.254)	75	(0.381)
B-4,C-4,D-3,D-4	General Room Ventilation			

Notes: 1) Use this table for room with crossdrafts less than 75 fpm (0.381 m/s). Install baffles, relocate the tank, or redesign the replacement air system for crossdrafts greater than 75 fpm (0.381 m/s).

2) Use the next higher capture velocity to completely control water vapor from hot processes.

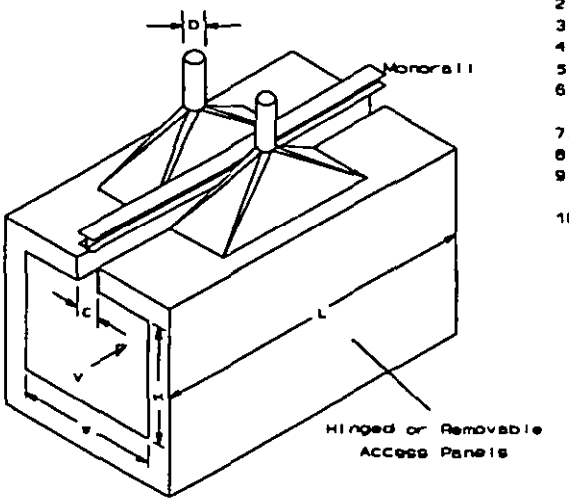

Notes:

1. Q = Exhaust Volume in cfm; equals (A) X (V).
2. H = Height of opening in feet.
3. W = Width of opening in feet.
4. C = Width of opening in feet.
5. L = Length of monorail slot opening
6. A = Area of opening in enclosure
   = 2 X (H) X (W) + (C) X (L).
7. V = Minimum capture velocity. (See table 5).
8. Duct velocity = 2500 fpm
9. Entry loss = entry loss factor for tapered hood times duct velocity pressure
10. Make C, W, and H only large enough to pass work and hanger.

Figure 43
Enclosing Hood with Outside Monorail

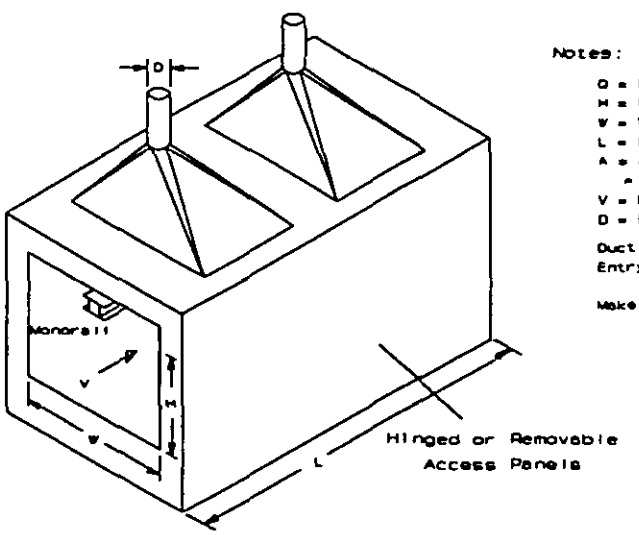

Notes:

Q = Exhaust Volume in cfm: equals (A) X (V)
H = Height of retangular opening, feet
W = Width of opening, feet
L = Length of enclosure, feet
A = Area of opening in enclosure
  = 2 X (H) X (W)
V = Minimum capture velocity. (See table 5)
D = Duct diameter

Duct velocity = 2500 fpm, min.
Entry loss = entry loss factor for tapered hood times duct VP.
Make W and H only large enough to pass work and hanger

Figure 44
Enclosing Hood with Inside Monorail

5.3.2 Buffing, Grinding, and Polishing Hoods. Personnel also perform buffing, grinding, and polishing operations at metal cleaning and electroplating facilities. These operations generate finely dispersed (and sometimes flammable or combustible) contaminants.

a) Specify sufficient exhaust volume flowrate to maintain a contaminant level below 25 percent of the Lower Explosive Limit (LEL) of the material, in all areas of the exhaust system.

b) Specify shaped "receiving" hoods for these operations as required in 29 CFR 1910.94(b). The hoods have a three-fold purpose:

1) To prevent contaminants from entering the operator's breathing zone.

2) To control ejected dust and dirt particles acting as projectiles.

3) To serve as a guard or safety device in case the wheel explodes or breaks apart.

c) Cover at least 75 percent of the wheel by the shaped hood and use proper ventilation rate to control particles formed from the workpiece, its coatings, and the wheel material.

d) Do not use portable hoods with flexible ducts.

e) Design an exhaust hood that completely encloses the workpiece, similar to a glove box, if the workpiece is highly toxic, radioactive, or explosive.

Minimum criteria for the following shaped hoods are given in the ACGIH Manual, Chapter 10:

Type of Hood	Figure No.
Grinder Wheel Hood Surface Speeds Above 6500 sfpm (33.0 m/s)	VS-80-10
Grinder Wheel Hood Surface Speeds Below 6500 sfpm (33.0 m/s)	VS-80-11
Vertical-Spindle Disc Grinder	VS-80-14
Horizontal Double Spindle Disc Grinder	VS-80-15
Manual Buffing and Polishing Wheel	VS-80-30
Buffing Lathe	VS-80-31
Backstand Idler Polishing Machine	VS-80-32
Metal Polishing Belt	VS-80-35

5.4 Ductwork and Fans.

5.4.1 Metal Cleaning and Electroplating.

5.4.1.1 Ductwork. Follow the general criteria provided in para. 2.1.3.1.

a) Design the exhaust air ductwork to maintain a minimum transport velocity of 2500 fpm (12.7 m/s).

b) Refer to SMACNA, Accepted Industry Practice for Industrial Duct Construction, for guidance on duct construction materials.

c) Fiberglass-reinforced plastic (FRP) ductwork, where used, shall be fire resistant and self extinguishing.

d) Use separate exhaust systems to ventilate acid and cyanide operations. This will prevent the mixing of acid and cyanide.

5.4.1.2 Fans. Specify the exhaust and replacement air fans according to criteria provided in para. 2.1.3.2. Select exhaust fans according to the following criteria:

a) Specify backward inclined centrifugal fans.

b) Do not place fan motor in contact with the airstream.

c) Use the following fan components when ventilating explosive or flammable particles, vapors, and fumes:

1) Nonferrous impeller.

2) Nonferrous ring through which the shaft passes.

d) Do not use ferrous material on fan components that may rub or strike one another causing a spark. Ensure that the impeller, bearings, and the shaft are adequately fastened to prevent a lateral or axial shift in these components.

5.4.2 Buffing, Grinding, and Polishing.

5.4.2.1 Ductwork. Follow design criteria provided in para. 2.1.3.1.

a) Specify class II duct construction according to SMACNA, Round Industrial Duct Construction Standards.

b) Specify a minimum duct transport velocity of 3500 fpm (17.8 m/s) for dry materials, and 4500 fpm (22.9 m/s) for wet materials in buffing and polishing operations.

c) Specify a minimum duct transport velocity of 4000 fpm (20.3 m/s) for grinding operations.

d) Specify duct hangers with sufficient strength to support the ductwork in case the duct becomes half filled with material.

e) Provide cleanout doors adjacent to every bend and vertical riser.

f) In horizontal duct runs, space cleanout doors no more than 12 feet (3.66 m) apart in ducts that are 12 inches (30.5 cm) or less in diameter. Space cleanout doors no more than 20 feet (6.0 m) apart in larger ducts.

g) Locate all cleanout doors on the side or top of the ductwork.

5.4.2.2 Fans. Specify the exhaust and replacement air fans according to criteria provided in para. 2.1.3.2 and para. 5.4.1.2.

5.5 Discharge Stack Design and Location. Use FRP discharge stacks for operations with corrosive emissions. Use steel stacks, designed according to SMACNA Guide for Steel Stack Design and Construction, for operations with either solvent or buffing, grinding, and polishing emissions.

5.6 Air Cleaning Devices.

5.6.1 Chemical Cleaning and Electroplating Air Cleaning Devices. Specify air cleaning devices to comply with state and local air pollution regulations and to prevent deterioration of surrounding buildings, equipment, and vehicles. Hard chrome and hydrochloric acid (HCl) tanks require air pollution control devices. Other processes such as nickel plating metal cyanide plating and nitric acid may require emission control devices depending on local air emission regulations.

5.6.1.1 Mesh Pad Mist Eliminator. Use a mesh pad mist eliminator, as shown in Figure 45, to control chromic acid plating emissions. These emissions are relatively large mist droplets (greater than 5 microns). Mesh pad mist eliminators offer simple operations, low initial cost, and low volume concentrated wastewater, thereby reducing waste treatment requirements.

Long ductwork exhaust systems design and/or low ambient humidity may cause chromic acid mist to dehydrate into finer, less collectible mist. Mesh pad mist eliminator vendors must incorporate a solution to this problem in their design. Some vendors recommend mesh pad wash cycles. Other designs locate the device close to the plating tanks to collect mist before dehydration occurs. Others may include an exhaust humidification system. Design criteria for mesh pad mist eliminators are as follows:

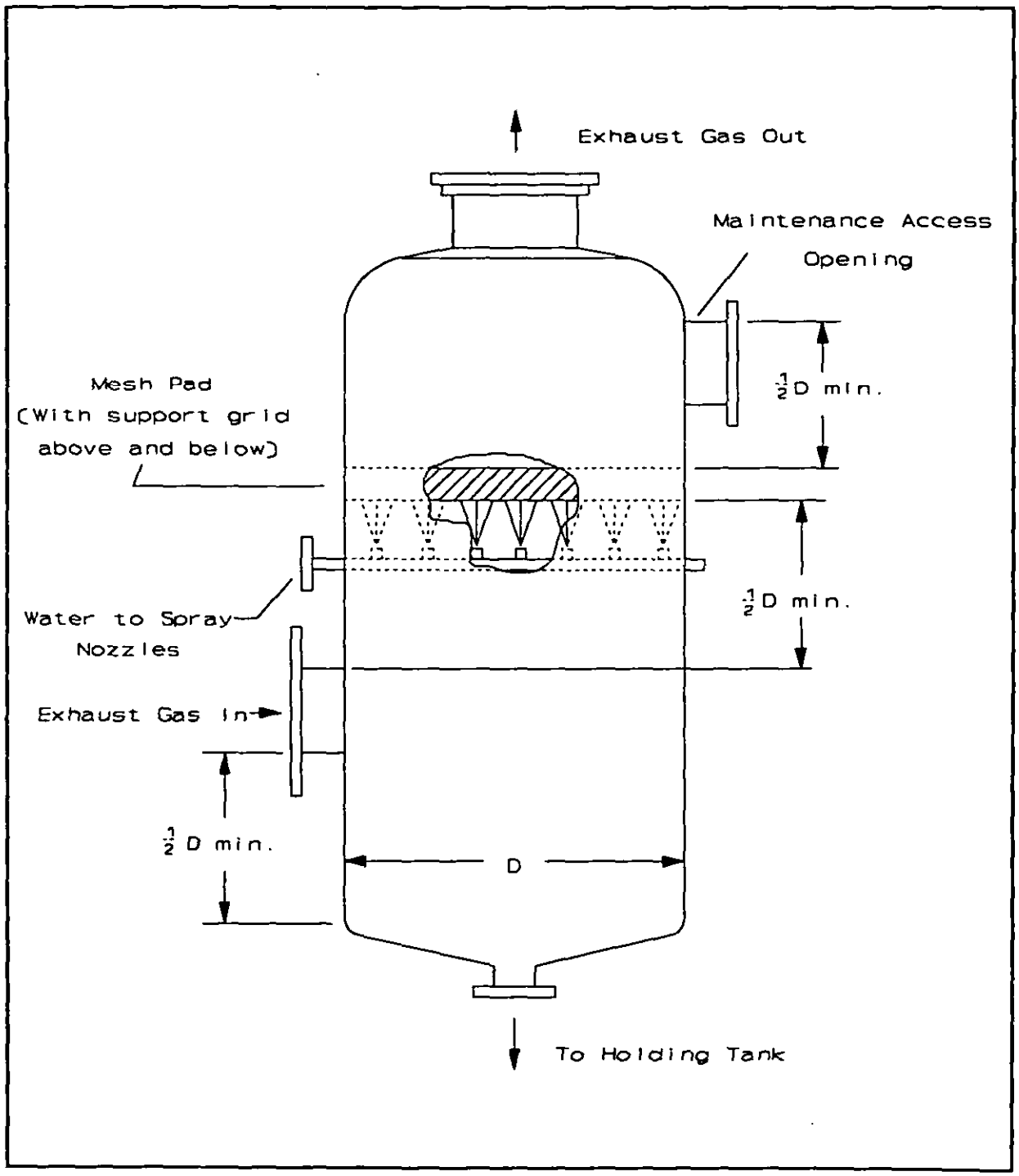

Figure 45
Mesh Pad Mist Eliminator

a) Select a mist eliminator with a minimum overall collection efficiency of 98 percent on a chromic acid mist, regardless of mist droplet sizes.

b) Size mesh pad cross-sectional area for a maximum of 500 fpm (2.55 m/s) air velocity.

c) Allow a maximum pressure drop of 2 inches wg across the mist eliminator.

d) Construct the mist eliminator of FRP material.

e) Select a removable replaceable mesh pad (minimum 6 inches thick) constructed of polypropylene material with a minimum density of 9 pounds per cubic feet (144 kilogram/cubic meter). The surface area per unit volume of the pad shall be a minimum of 86 square feet per cubic foot (282 meter square per cubic meter).

f) Construct support grids above and below the mesh pad to prevent movement. Design the support grids to withstand a 6 inch wg pressure drop across the pad without deflection.

g) Equip the mist eliminator with a recirculating wash down system. Include in the washdown system a bank of spray nozzles located below the mesh pad. Design the spray nozzle system to operate with or without the exhaust fan running. Arrange the spray nozzle piping network so that all lower portions of the mesh pad are rinsed. Do not allow rinse water to re-enter the mist eliminator. Construct the piping system as follows:

1) Construct spray nozzle system (including the spray nozzles) with polyvinyl chloride (PVC). Use schedule 80 PVC for pipes and fittings. Use union end PVC ball valves. Use replaceable nozzles and connect them to piping using "T" unions.

2) Install a flow meter and a flow control valve on the water line leading to the spray nozzle system.

3) Install a sump with minimum capacity of 1.5 times the recirculation flowrate.

4) Control wash down cycles with a 24 hour adjustable timer. Vary the wash cycle interval in 1 minute increments.

h) Size the drain pipe, flanged to the base of the mist eliminator, for a minimum diameter of 4 inches (101 mm). Construct the drain pipe of schedule 80 PVC. Install a check valve or p-trap in the drain pipe to prevent pulling air through the drain pipe. Terminate the drain pipe at a holding tank.

Pump the chromic acid collected in the holding tank to the hard chrome tanks. Separately mount the holding tank pump, or "sump pump" adjacent to the holding tank. Use vertical seal-less, self-priming column centrifugal type pump. All outdoor fluid systems must be freeze protected.

i) Install a 24 inch (601 mm) diameter inspection hatch in the mist eliminator shell above the level of the mesh pad for maintenance access.

j) Install differential pressure taps above and below the mesh pad. Locate the differential pressure gauge on the annunciator panel in the shop at an easily accessible location.

Set the differential pressure gauge to trip an audible "acknowledge" alarm when differential pressure across the pad exceeds 1.0 inch wg (10.1 KPa) above the normal operating differential pressure range. The alarm indicates that a wash down of the mesh pad is necessary. The alarm should also sound when the differential pressure across the pad falls more than 1.0 inch wg (10.1 Kpa) below the normal range. When this occurs, a hole or other damage to the pad may have occurred.

k) Install a three way valve on each pressure gauge signal line so the operator may periodically blow out the lines to prevent blockage. These valves also allow the gauge to be zeroed while the system is operating. Place these three way valves next to the pressure gauges on the annunciator panel.

5.6.1.2 Vertical Counterflow Wet Scrubber. Use a vertical counterflow wet scrubber (Figure 46) whenever local regulations require a total weight chromic acid collection efficiency greater than 98 percent.

Scrubbers are widely used for controlling hydrochloric acid emissions, and emissions from other acid and caustic processes. Consult the local regulatory agency for specific requirements. Design criteria for these scrubbers are as follows:

a) Specify a removal efficiency of 98 percent for total hydrochloric acid, sulfuric acid and sodium hydroxide emissions unless local regulations require additional control.

b) Size scrubber cross-sectional area for a maximum of 500 fpm (2.54 m/s) air velocity.

c) Allow a maximum pressure drop of 3 inches wg (30.4 KPa) across the scrubber.

d) Construct the wet scrubber of FRP material. Apply a color additive gel coat, which is totally resistant to ultraviolet radiation, to the exterior surfaces. Do not use acetone sensitive interior and exterior coatings. Use a resin coating containing wax on all interior surfaces. Coat the interior surface with a synthetic veil to isolate the glass fiber wall. Deterioration occurs when contaminants stick to exposed glass fibers.

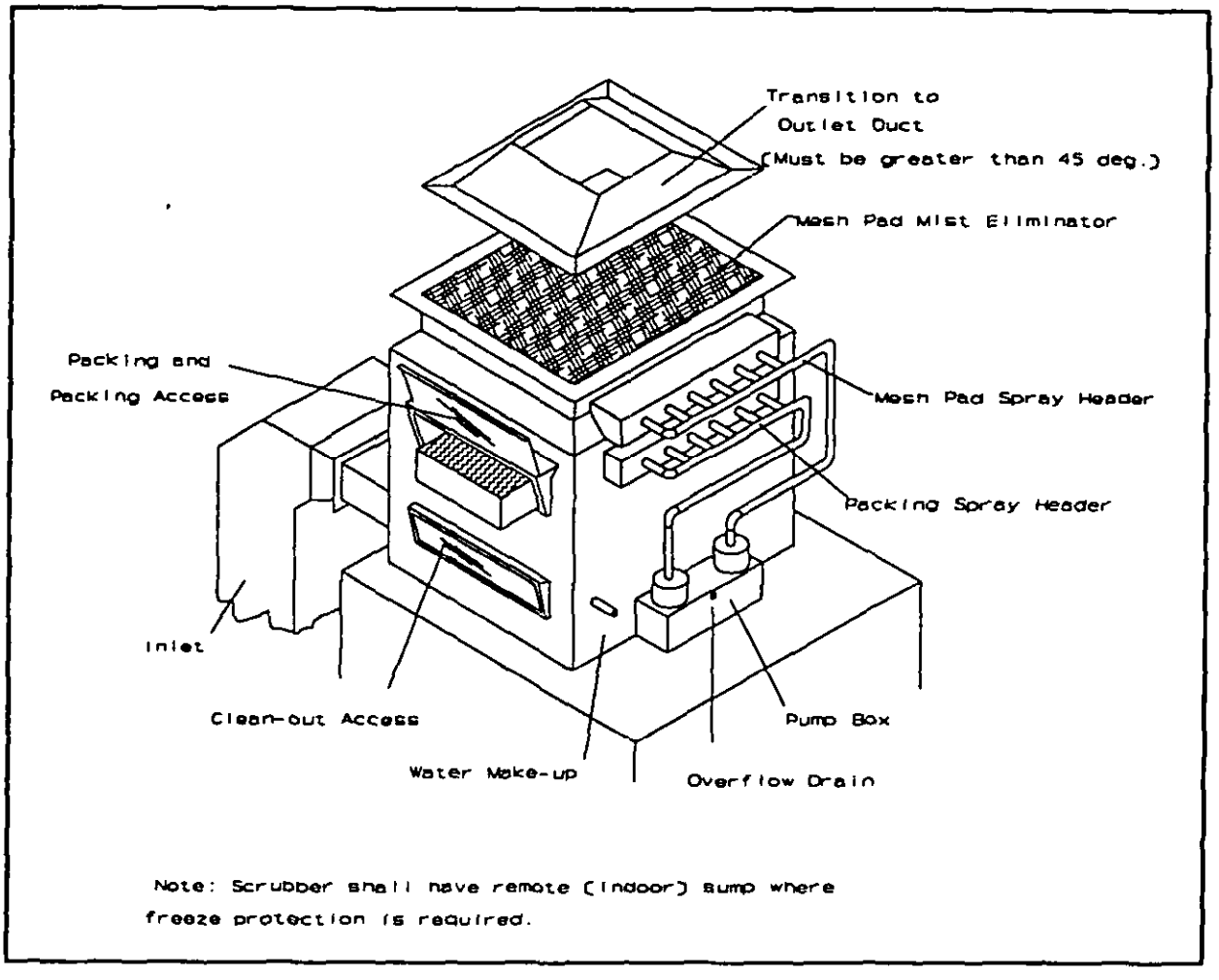

Figure 46
Vertical Counterflow Wet Scrubber

e) Install a mesh pad mist eliminator at the outlet, immediately downstream of the scrubber packing. Do not use chevron mist eliminators, since they cannot capture particles of less than 5 microns in diameter. Refer to the design criteria for mesh pad mist eliminators (and their washdown systems) in section 5.6.1.1.

f) Construct scrubber packing of polypropylene or PVC. Construct structural support plates and reinforcement of FRP. Design the support plates and reinforcement to withstand a pressure of 20 pounds per square inch (psi) (137.8 PA) with no deflection.

Construct spray nozzles of non-clogging polypropylene or PVC. Design the nozzles to be replaceable from the exterior of the scrubber. Fit the nozzles using union joints. Do not thread nozzles directly into piping. See Section 5.6.1.1, item g, for details on recirculation piping. Both the continuous scrubber packing spray system and the intermittent mesh pad washdown system can use a common sump.

1) Use a minimum scrubber packing flow rate of 4 fpm (15.1 liters/min) per square foot of packing cross-sectional area.

2) Incorporate an inlet filter, serviceable from the outside of the scrubber, in the recirculation pump.

3) Size the minimum scrubber sump capacity to equal 1.5 times the volume required by the recirculation system.

g) Mount differential pressure gauges on the annunciator panel. Locate scrubber pressure taps upstream from the scrubber packing and downstream from the mist eliminator. Connect these taps to the differential pressure gauges using leak-free tubing.

h) Specify an inspection hatch for maintenance access. Locate the hatch above the scrubber packing and below the mesh pad mist eliminator, giving easy access to the spray nozzles.

i) Install a three way valve on each differential pressure gauge signal line. The valves allow periodic blowout of the signal lines and zeroing of the gauges while the system is operating. Locate the valves on the annunciator panel adjacent to the pressure gauges.

Install a horizontal chevron mist eliminator (Figure 47) upstream from the scrubber, if the control device chosen for chromic acid emissions is a wet scrubber. A chevron mist eliminator will collect over 80 percent of the chromic acid mist, reducing the wastewater stream from the wet scrubber. Design criteria for chevron mist eliminators are given in the next paragraph.

5.6.1.3 Chevron Mist Eliminator. See figure 47.

a) Construct the mist eliminator housing of FRP. Construct the chevron blades of polypropylene.

b) Design velocity is 1200 fpm (6.10 m/s). Specify 100 percent removal efficiency at the design velocity for all particles with diameters greater than 20 microns.

c) Allow a maximum pressure drop across the mist eliminator of 1.0 inch wg (10.1 KPa).

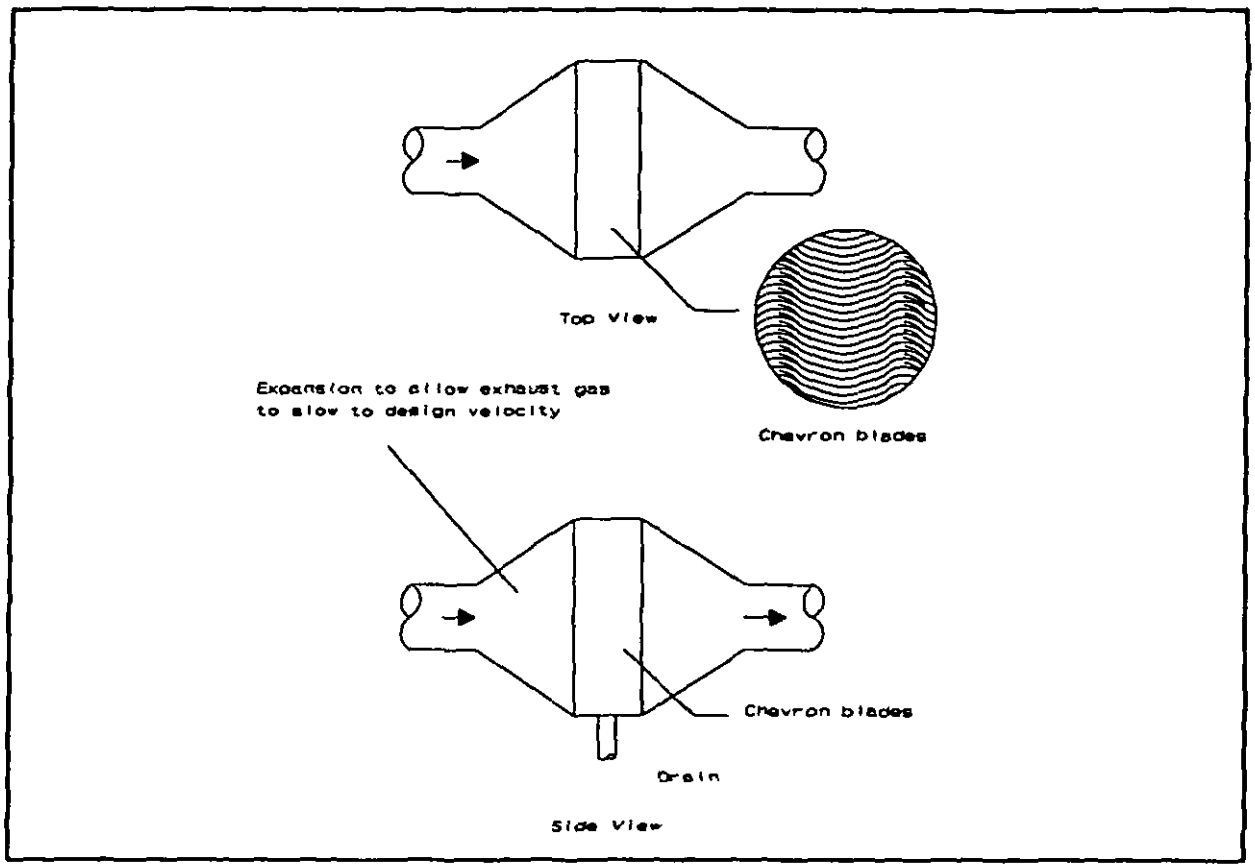

Figure 47
Chevron Mist Eliminator

d) Locate a bank of spray nozzles directly upstream of the chevron blades for periodic washdown. Design the washdown system as a once-through system with run-off drained (or pumped) directly into a holding tank. Use contents from the holding tank to replenish plating tanks.

Construct washdown system pipes and fittings of schedule 80 PVC. Use PVC union end ball valves. Connect nozzles to piping using "T" unions. Do not screw nozzles directly into piping since fatigue will incur.

e) Control washdown cycles automatically using a timer adjustable in increments of one minute over a 24 hour time period.

f) Locate access panels for ease of maintenance and removal of all internal components.

5.6.2 Air Cleaning Devices for Buffing, Grinding, and Polishing. Specify a dust collector for controlling emissions from these operations. Position the dust collector outdoors and equip it with explosion relief vents designed according to NFPA 68, Guide for Venting of Deflagration. Accumulation of lint or combustible metals (e.g., magnesium) can create fire and explosion hazards.

Ground all parts of the ductwork and dust collector to prevent build-up of static charges. Specify a wet collector for extremely hazardous materials.

5.7 Replacement Air. Use multiple air handling units to provide replacement air to the shop. Design replacement air systems to maintain a pressure (relative to the atmosphere) ranging from -0.02 to -0.06 inches wg (-5.0 to -14.9 Pa) in the shop.

Distribute the air evenly to produce laminar flow of air from supply to exhaust in the work space. Design a drop ceiling with perforated plate to form a plenum according to section 2.1.3.5. Do not recirculate exhaust air.

5.7.1 Heating and Cooling. Design air heating according to NAVFAC DM-3.03. Consider the use of heat recovery equipment for cold weather locations. Do not specify a heat exchanger which mixes exhaust and replacement air, as in the case of rotary wheel heat exchangers.

5.8 System Controls. Design system controls according to para. 2.1.3.6.

Section 6: FIBERGLASS REINFORCED PLASTIC FABRICATION AND REPAIR FACILITIES

6.1 Function. Fiberglass reinforced plastic (FRP) shops and facilities primarily fabricate and repair aircraft and shipboard components. Both include a shop area, a mechanical equipment area, and a decontamination area (for protective clothing).

6.1.1 Design Criteria. Design the facility using general technical requirements in Section 2 of this handbook and the specific requirements in this section.

6.2 Operational Considerations. FRP fabrication and repair operations include sanding, buffing, fabric cutting, grinding, lay up, and wet spray up. These operations produce dust and vapor that constitute health hazards. The protective clothing that the workers wear and the physical nature of the work create a potential for heat stress.

Consider using airless spray equipment to reduce potentially hazardous vapors in the shop. While the initial cost for this equipment is greater than traditional compressed air systems, benefits include the following:

a) Reduction of overspray and fog.

b) Less accumulation of resin and fiberglass over the life of the equipment.

One disadvantage of these systems is their limited pattern and flow adjustment capability.

6.2.1 Typical Floor Plans. Design functional floor plans for FRP fabrication and repair facilities to meet Occupational Safety and Health Administration (OSHA) requirements. Locate locker room and shop spaces so workers do not have to go through decontamination procedures many times per day while attending to their bodily needs. Figure 48 shows the typical floor plan which addresses these considerations.

6.2.2 Ergonomics. The arrows in Figure 48 show the traffic pattern during a typical work shift. The workers enter the clean locker rooms through the administrative area. They put on protective outerwear and proceed to the shop area through corridors that bypass the dirty locker rooms.

After performing their work, shop personnel vacuum then discard their protective outerwear in containers provided in the decontamination area. The workers then enter the dirty locker rooms where they remove the remainder of their work garments. They proceed to the clean locker rooms via the showers, which act as a barrier to the migration of glass fibers, vapors, and resin dust.

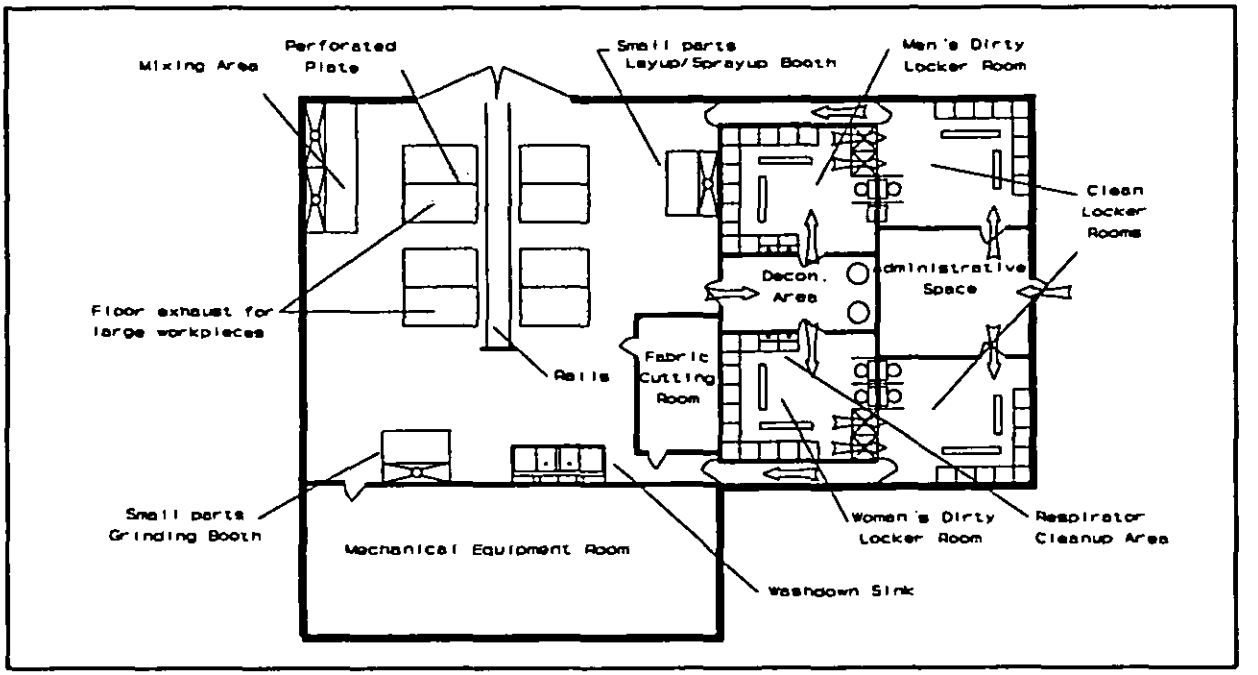

Figure 48
Typical Floor Plan for FRP Facility

6.3 Exhaust Air. Provide local exhaust that captures contaminated air generated during FRP fabrication and repair operations.

Design the entire exhaust air system according to the following:

a) MIL-HDBK 1008, Fire Protection for Facilities Engineering, Design and Construction.

b) NFPA 33, Standard for Spray Applications Using Flammable and Combustible Materials.

c) NFPA 91, Standard for the Installation of Blower and Exhaust Systems for Dust, Stock and Vapor Removal or Conveying.

d) NFPA 654, Standard for the Prevention of Fire and Dust Explosions in the Chemical, Dye, Pharmaceutical, and Plastics Industries.

e) NFPA 68, Guide for Venting of Deflagrations.

FRP dust will burn and can explode in a manner similar to fine wood dust. Design sufficient exhaust volume to maintain a contaminant concentration level below 25 percent of the Lower Explosive Limit (LEL) of the material in all areas of the exhaust system.

Vapor condensation may occur in the ductwork as it passes through an area with a lower temperature. Flammable vapors from styrene and acetone that condense and pool in the ductwork can create a fire hazard.

Use Low Volume High Velocity (LVHV) hand tools, described in para. 6.3.6, in hoods generating vapors, if space is limited. Isolate conventional grinding operations from the mixing areas and the lay up and spray up areas. The combined hazard of dust and flammable vapors is potentially explosive. Post signs in the lay up and spray up areas and the mixing area without LVHV connectors that read:

DANGER
DO NOT GRIND, CUT, OR SAW
FIBERGLASS IN THIS AREA

The LEL, also referred to as the lower flammability limit, is the minimum concentration of chemical below which the chemical and air mixture is too "lean" to burn or explode. The Material Safety Data Sheet (MSDS) lists the LEL for volatile chemicals as percent by volume in air. Request the information from the manufacturer if the MSDS does not list the LEL.

Generally, if the ventilation system removes vapor to meet the Threshold Limit Value (TLV) requirements, the LEL requirement is also met. However, the LEL value must be checked. Appendix B shows a sample calculation.

6.3.1 Hood Design. The sizes and shapes of workpieces in FRP fabrication and repair facilities vary greatly. Design separate hoods for processes producing only particulate, only vapor, and both particulate and vapor. Table 6 summarizes recommended hood types and air pollution control devices for each operation.

Use portable hand tools with LVHV vacuum systems for sawing, cutting, and grinding on all workpieces. Ensure that the tools, with their vacuum hoses, are properly sized for the workpiece internal angles and curvature. Para. 6.3.6 describes LVHV systems.

Table 6
Recommended Hoods and Air Pollution Devices for FRP Operations

Operation (Expected contaminant)	Hood Type (Figure Number)	Air Cleaning Device (See Notes)
Chemical Mixing (Vapors)	Workbench (53)	1
Lay up (Vapors)	Workbench/Large Piece (53/52/51)	1
Spray up (Vapors)	Spray up (52)	1
Grind,Cut,Saw (Particulate)	Workbench/Large Piece (53/51)	2
Cleanup (Vapors)	Washdown (54)	3 or 1
Hand Tools (Particulate)	LVHV Vacuum System	2

Notes: 1) Determined by the local air pollution regulations but may include an afterburner or a carbon adsorber.

2) Fabric Collector.

3) Substitute an Aqueous Emulsion Cleaner for Acetone.

Consider a molding system that completely encloses the workpiece if the facility repeatedly manufactures the same workpiece.

Design exhaust hoods that enclose all processes to the greatest possible extent without inhibiting operations. Baffle all exhaust hoods to reduce crossdrafts and improve hood efficiency. Ensure that a capture velocity of no less than 150 fpm (0.76 m/s) is generated by the hood to control contaminants.

Design the hood face using 3/8-inch (9.5 mm) hole perforated plate for all hoods, except the spray up hood. Use a layered prefilter for spray up booths. Design for 2000 fpm (10.2 m/s) velocity through the perforated plate.

Design the plenum velocity at least one-half, but no greater than, the velocity through the perforated plate or layered prefilter to create an even airflow over the hood face. Design the hood-to-duct transition with an included angle of no more than 90 degrees.

Specify that the length of the hood served by each exhaust plenum shall not exceed 8 feet (2.44 m). For example, hoods between 8 and 16 feet (2.44 and 4.88 m) in length shall have two exhaust takeoffs. Provide cleanout doors in the plenum to allow removal of accumulated particulate.

6.3.1.1 Hoods for Large or Concave Pieces. Specify a floor exhaust plenum as shown in Figure 49 when the workpiece has large or concave surfaces.

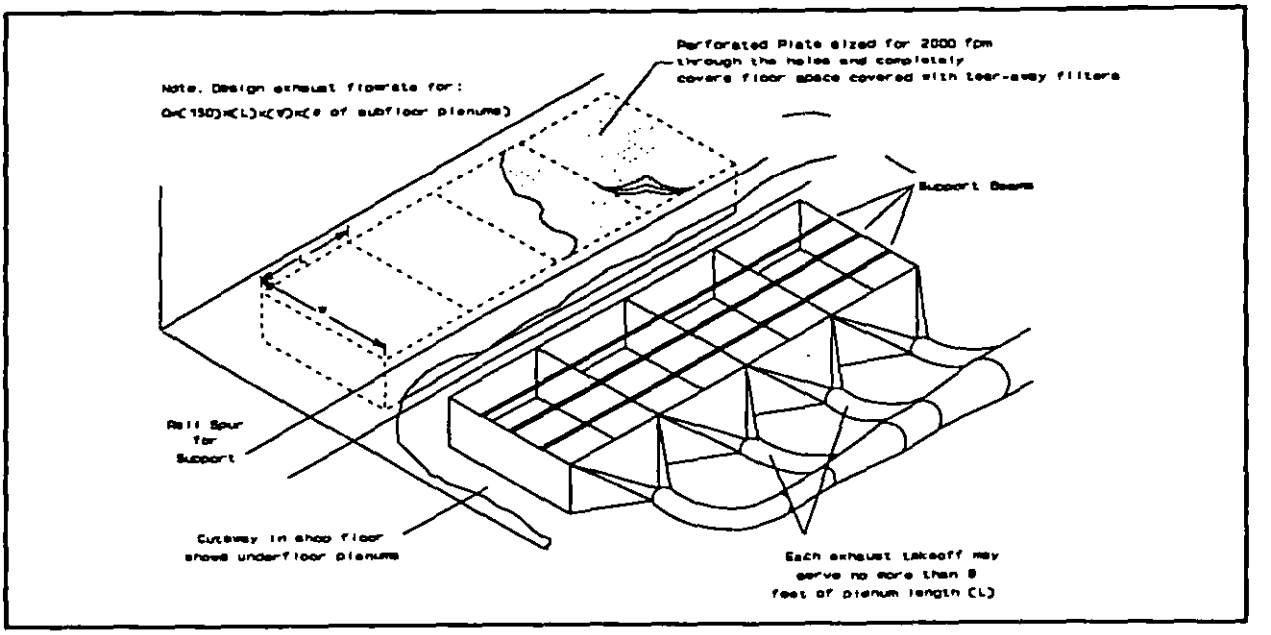

Figure 49
Floor Exhaust

Mount the workpiece on a cart that rotates the workpiece easily. This will reduce the dead air space that occurs when radomes, boat hulls, etc. are placed on the floor.

6.3.1.2 Spray up Booths. Design a spray up booth as shown in Figure 50. Use the spray up hood design in shops where spray up and lay up are performed in the same booth. Separate operations in this booth from any cutting, grinding, and sawing operations when conventional hand tools are used.

6.3.1.3 Ventilated Workbench. Design a ventilated workbench as shown in Figure 51 for small workpieces. Use a similar workbench for resin preparation and mixing.

Eliminate the drawers and increase the size of the hood face by extending it to the floor if 55-gallon drums are used during resin preparation. Use aqueous emulsion cleaners to reduce styrene and acetone exposure.

6.3.1.4 Ventilated Solvent Washdown Sink. Specify a ventilated solvent washdown sink as shown in Figure 52 in all FRP lay up and repair facilities.

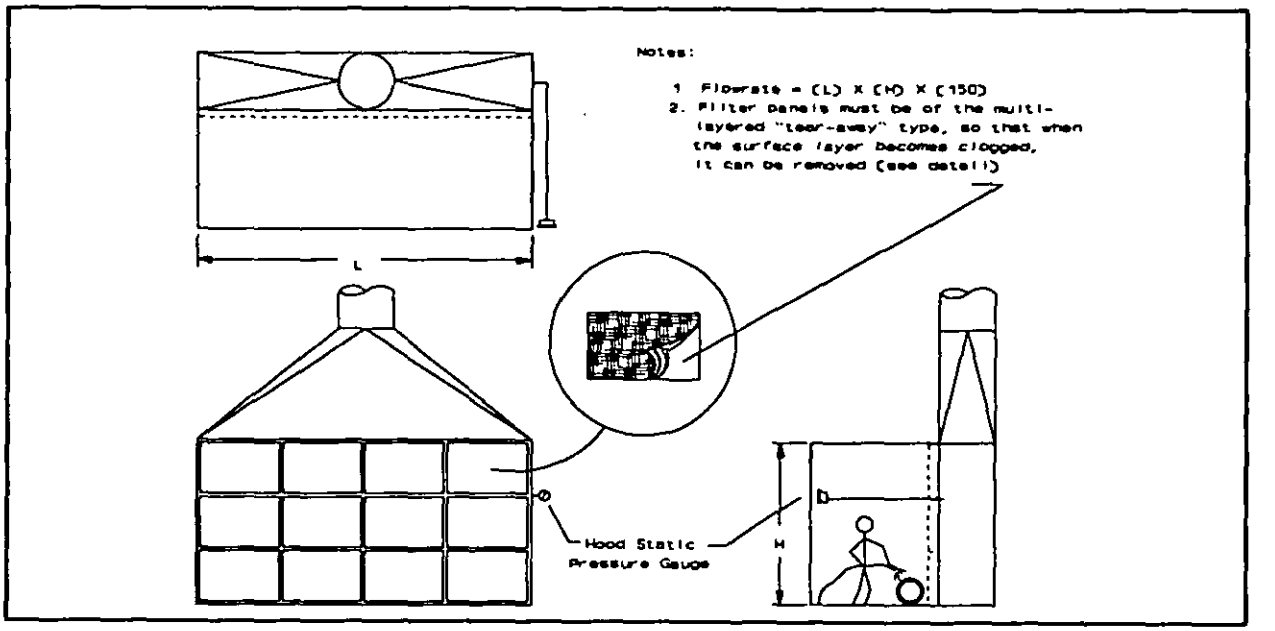

Figure 50
Spraying Booth

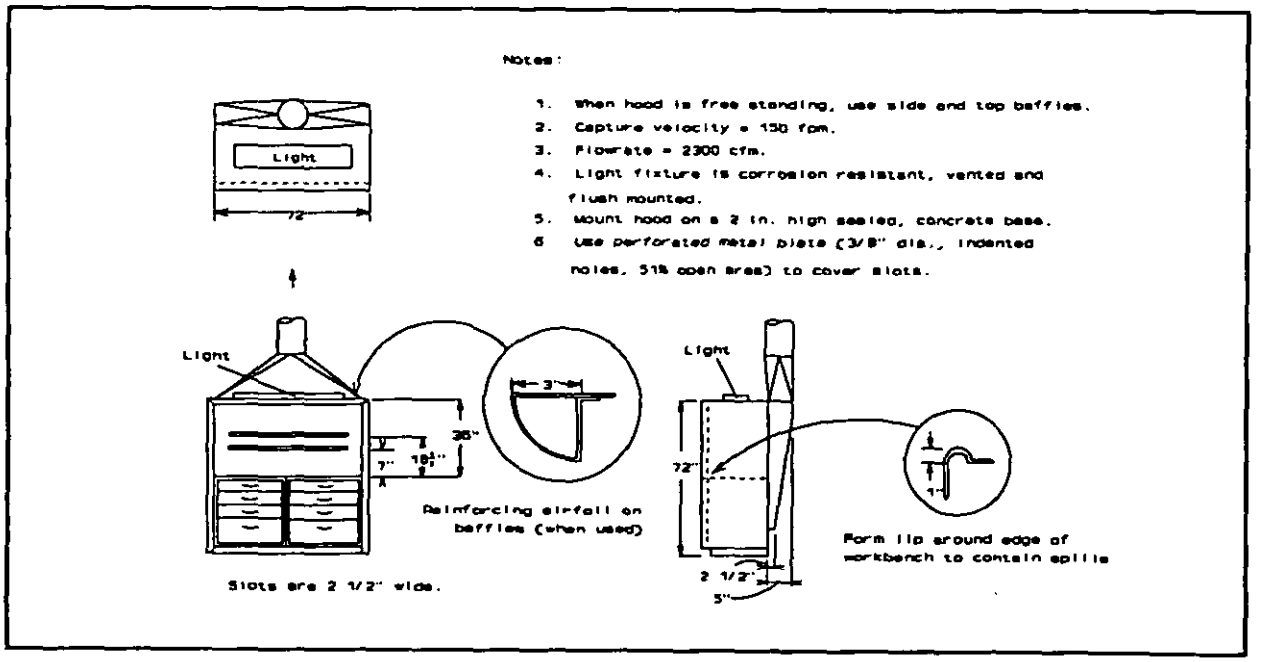

Figure 51
Workbench Hood

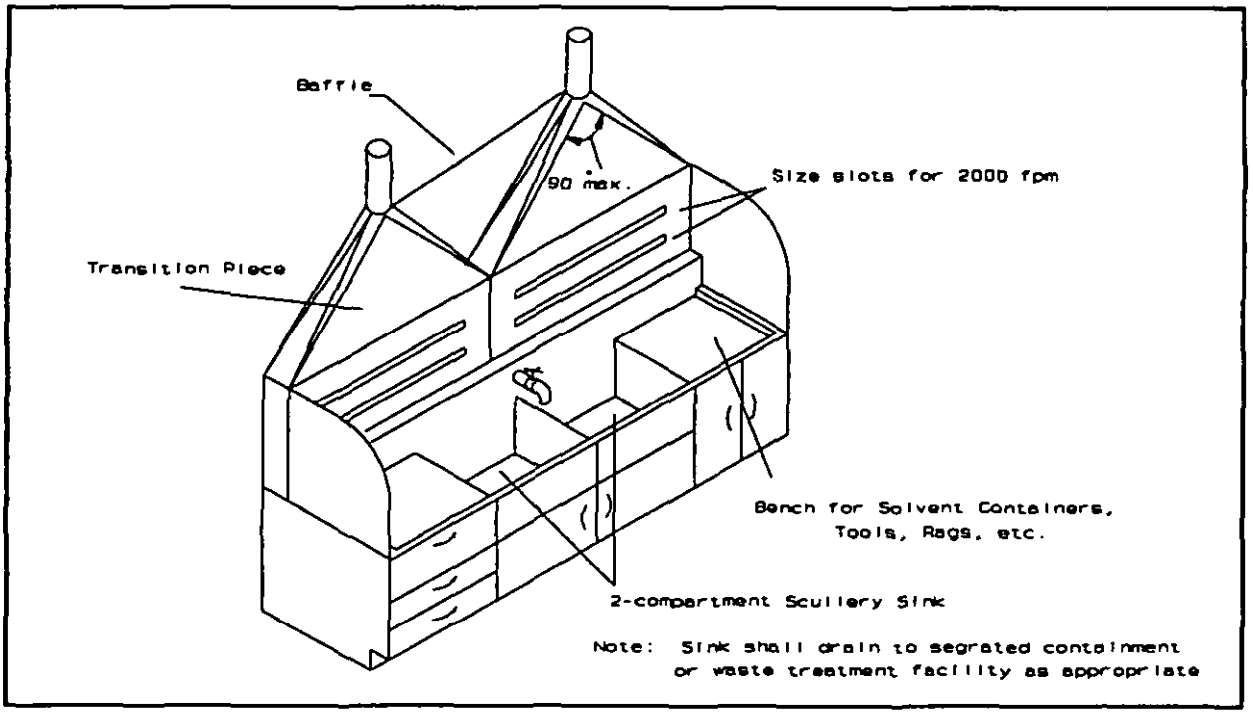

Figure 52
Ventilated Sink

6.3.2 Ductwork. Design a 3500 fpm (17.8 m/s) minimum transport velocity for LVHV hand tools, and grinding and spray up operations to prevent particulate material from collecting in the ductwork.

Size the ductwork carrying vapor (e.g. lay up and mixing operations) for a minimum transport velocity of 2500 fpm (12.7 m/s). Use sheet metal as duct material since it is non-combustible. Route the ductwork directly to fans located outdoors. For further information on ductwork, refer to para. 2.1.3.1.

Specify duct hangers that have sufficient strength to support the ductwork should it become half filled with material.

Provide cleanout doors adjacent to every bend and vertical riser. In horizontal duct runs, space cleanout doors no more than 12 feet (3.66 m) apart in ducts that are 12 inches (0.305 m) or less in diameter. Space cleanout doors no more than 20 feet (6.0 m) apart in larger ducts. Refer to para. 2.1.3.1 for general duct considerations. Do not locate cleanout doors on the bottom side of ductwork.

Consult with a fire protection engineer and use MIL-HDBK 1008A to design a fire protection system for the ductwork when required.

6.3.3 Fans. Use backward curved airfoil type centrifugal fans for this application. Backward airfoil type centrifugal fans are the most efficient and quiet, but a centrifugal fan with backward inclined blades is also acceptable. Refer to para. 2.1.3.2 for general considerations.

6.3.4 Weather-Stack Design and Location. Refer to para. 2.1.3.3 for exhaust stack design guidance.

6.3.5 Air Cleaning Devices. Use separate air cleaning devices for grinding, buffing and polishing operations where particulate material is generated. Use separate air cleaning devices for lay up and mixing operations where flammable vapors are generated.

Volatile Organic Compound (VOC) emission laws are becoming more strict. Mixing booths, spray up and lay up booths may require air pollution control devices such as afterburners, adsorbers, absorbers or condensers. Consult the air pollution control authorities for details on local requirement. Consider using low monomer polyester material, closed molding systems or low-VOC resin systems, and airless and air-assisted spray equipment to avoid the need for expensive air pollution devices.

Use a fabric collector for grinding operations and LVHV hand tools. Equip the fabric collector disposal chute with a motor-driven rotary air lock in shops with a large particulate volume.

Spray up operations release a combined contaminant of wet resin laden fiber and organic vapors. Therefore, separate spray up operations from all other operations. Install an air cleaning device for vapors.

Install layered prefilters on the spray up hood face instead of the perforated plate to prevent wet airborne resin from hardening in the ductwork and collectors. Peel off and discard a layer of the prefilter when its surface becomes loaded as indicated by the hood static pressure gauge. This continues until only the base filters remain. After that, replace the entire prefilter section. Specify a filter material that is not damaged by the styrene and acetone vapor produced in FRP facilities.

6.3.6 Industrial Vacuum System. Install a vacuum system (see Figure 53) at fiberglass shops to exhaust fibers, dry resin and dust from LVHV hand tools when they are used. The vacuum system also allows workers to conduct shop cleanup and to decontaminate their protective outerwear.

The ACGIH Manual, Chapter 10 gives design details and illustrates power tools using LVHV vacuum systems. The large size and high terminal velocity of the particulates produced by the hand tools requires a high velocity vacuum take-off hood for each tool. Generally, design the takeoff hood into the tool's safety guard. Refer to Table 7 for minimum exhaust volumes and vacuum hose sizes.

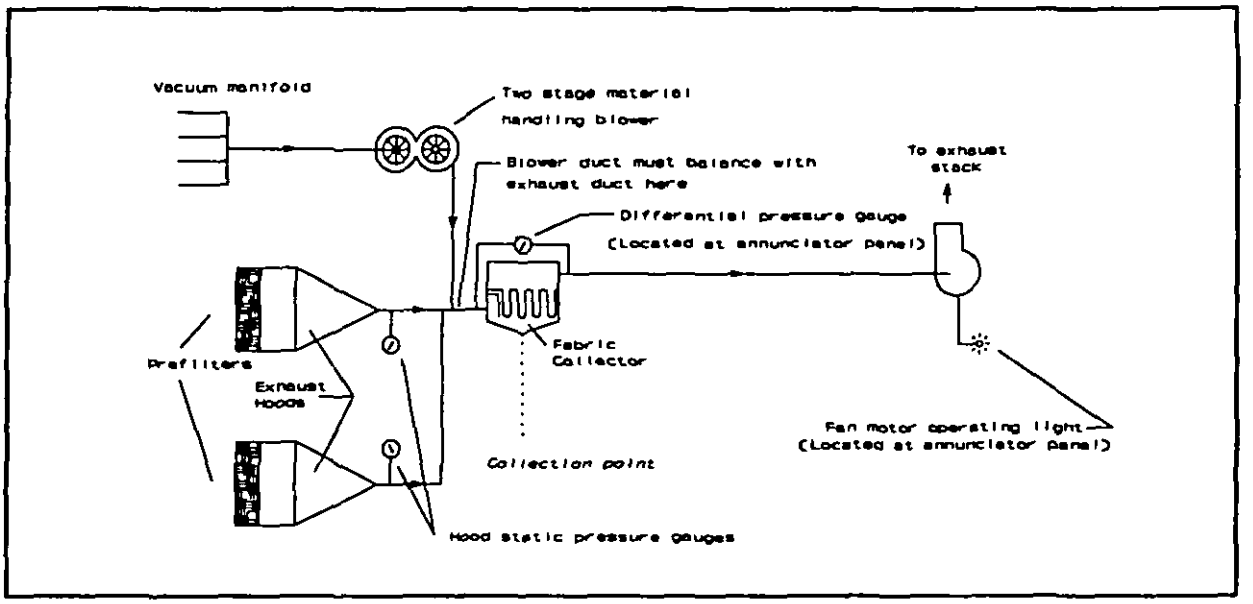

Figure 53
Exhaust System Schematic

Table 7
Minimum Volumes and Vacuum Hose Size for FRP Operations

Hand Tool	Flow Rate (CFM)	Hose Size (inch)
Router, 1/8" - 1"	80-100	1-1.25
Belt sander 3" - 4000 fpm	70	1
Disk sanders 3"-9" diam.	60-175	1-1.25
Vibratory pad sander - 4"x9"	100	1.25
Pneumatic chisel	60	1
Radial wheel grinder	70	1
Surface die grinder, 1/4"	60	1
Cone Wheel grinder, 2"	90	1.25
Cup stone grinder, 4"	100	1.25
Cup-type brush, 6"	150	1.5
Radial wire brush, 6"	90	1.25
Hand wire brush, 3" x 7"	60	1
Rip out knife	175	1.5
Rip out cast cutter	150	1.5
Saber saw	120	1.5
Saw abrasive, 3"	100	1.25
Swing frame grinder 2" x 18"	380	2.5
General vacuum	200	2

Note: Locate tool vacuum hose connection on the ends of the worktable underneath the stands.

Design the vacuum system according to the following criteria:

a) Ensure each take-off hood produces the proper capture velocity. This is the most important consideration in designing the vacuum system. Design the hood to capture contaminants as close as possible to the point of generation. Design vacuum systems to capture contaminants within 1/2 inch (1.26 cm) of the source.

b) Design the capture airstream to have a velocity of two to three times the generation velocity for particles of 20 to 30 microns. Design for an additional velocity of:

1) four to five times the generation velocity to pull the particles up through 300 U.S. standard mesh, or

2) six to eight times the generation velocity to pull particles up through 20 U.S. standard mesh.

c) Design the air volume for no less than two parts of air to one part of material to be captured by weight.

d) Design the vacuum hose length less than 25 feet (7.6 m). Locate inlet valves 30 to 35 feet (9 m to 10.7 m) apart when a 25 foot length of hose is used. Locate the tool vacuum hose connection on the ends of the workbench underneath the stands. Size the hose based on the following:

1) Air volume per hose.

2) Number of hoses to be used simultaneously.

3) Transport velocities.

e) Use a multistage centrifugal blower for the vacuum system. Size the blower according to the following:

1) The total system pressure loss associated with the total number of hoses to be used simultaneously.

2) The maximum exhaust flowrate entering the inlet of the blower.

f) Feed the blower directly into the dirty side of the fabric collector (see Figure 53) used by the industrial exhaust system to minimizes the number of FRP collection points.

g) Use the manufacturer's data to complete the design because the LVHV system design data is largely empirical.

h) Design the entire vacuum system according to NAVFAC DM-3.5, Compressed Air and Vacuum Systems.

6.4 Replacement Air. Design replacement air systems to maintain a pressure (relative to the atmosphere) ranging from -0.02 to -0.06 inches water gauge (wg) (-4.97 Pascal (Pa) to -14.9 Pa) in the shop space.

Maintain the protective clothing decontamination areas, the equipment room, and the dirty locker rooms at a pressure (relative to the atmosphere) ranging from -0.01 to -0.04 inches wg (-2.49 to -9.96 Pa). Maintain the clean spaces at a pressure (relative to the atmosphere) ranging from +0.01 to +0.05 inches wg (+2.49 to +12.5 Pa). Refer to para. 2.1.3.5 for replacement air system criteria.

6.4.1 Quantity and Distribution. Distribute replacement air to produce a laminar flow of air from supply to exhaust in the work space. Use the vertical supply method (downdraft). Refer to para. 2.1.3.5 for design criteria.

6.4.2 Heating and Air Conditioning. Provide each ventilated space with a dedicated replacement air system. Provide heating and cooling according to NAVFAC DM-3.03. Conduct a study of the curing requirements of the resin before specifying temperature and humidity ranges. Do not recirculate exhaust air.

6.5 System Controls. Design system controls according to para. 2.1.3.6 and the following criteria.

a) Position the annunciator panel at the entrance to the dirty space so operators can monitor operating gauges.

b) Install differential pressure sensors at locations that are representative of the average static pressure in each controlled space. This will ensure that desired differential pressures are maintained.

c) Trigger a timer if the pressure varies from the specified range. Select a timer that automatically resets if the problem is corrected within 60 seconds.

d) Trigger both visible and audible alarms if the system cannot correct the problem within the allotted time. Install multiple alarm beacons if the operator's view is obscured during grinding.

e) Interlock the hand tool power supply with the ventilation system's on-off switch. This will prevent the use of hand tools without ventilation controls.

6.6 Safety and Health Items.

6.6.1 Respirators. 29 CFR 1910.1000 prescribes the maximum allowable concentrations of styrene, acetone, various solvents and glass fibers. Use guidelines established by the ACGIH if the process requires chemicals (e.g. methyl ethyl ketone peroxide) not listed in 29 CFR 1910.1000.

Provide a stacked cartridge respirator system to protect workers from glass fiber, specific resins and solvents used in the shop. Provide space in the dirty locker room to clean respirators.

Consider using air-line respirators. Provide several connection points for the respirator hoses to allow worker mobility. The connection for the air-line respirator hose must not be the same as the connection for the vacuum hose. This prevents inadvertent use of unfiltered plant compressed air for breathing air. Refer to 29 CFR 1910.134, NAVFAC DM-3.5, and ANSI Z88.2, Practices for Respiratory Protection, for general design considerations for breathing air supply systems.

6.6.2 Combination Emergency Eyewash and Deluge Shower. Specify a combination emergency eyewash and deluge shower when the potential for exposure to irritants (e.g. styrene, methyl ethyl ketone peroxide) exist. Refer to para. 4.6 for design criteria.

Section 7: ABRASIVE BLASTING FACILITIES

7.1 Function. Workers in abrasive blasting facilities prepare aircraft, shipboard, mechanical, and utility equipment for surface coating and welding operations.

7.1.1 Design Criteria. Design the facility using general technical requirements in Section 2 of this handbook and the specific requirements in this section.

7.2 Operational Considerations. During abrasive blasting operations, abrasives and the surface coatings on the blasted materials are shattered to varying degrees. This generates dust which may contain particles of respirable size (0 to 5 micrometer). The composition and toxicity of the dust often creates a health hazard. Enclose blasting operations to prevent contaminants from migrating to the adjacent areas.

Due to the abrasive materials and the dust-laden atmosphere in the work area, personnel must wear heavyweight clothing and an abrasive-blasting respirator. Refer to 29 CFR 1910.94(a) for specific design criteria to protect workers from health and safety hazards.

7.2.1 Toxic Materials. ANSI 9.4, Ventilation and Safe Practices of Abrasive Blasting Operations, recommends high volume airflow rates for the following toxic materials:

a) Abrasives containing more than 5% free silica.

b) Materials that may generate asbestos fibers or free silica containing dusts.

c) Coatings containing lead, mercury, cadmium, chromates, or other similarly toxic compounds having a PEL of less than 1 milligram per cubic meter.

Do not recirculate the air in facilities where operators blast on toxic coatings and substrates or use toxic blasting media. This requires a high energy cost to operate. Consider using a less toxic blasting media whenever possible.

Evaluate the coatings on existing workpieces when designing the facility. For example, even though the Navy no longer uses leaded paint, existing pieces may contain lead based coatings. Therefore, the designer must use higher flowrates.

7.3 Exhaust Air. Design the exhaust air system using criteria for downdraft or crossdraft blasting enclosures. Discharge all exhaust air from abrasive blasting operations through an appropriate air cleaning device.

Recirculate cleaned exhaust air only:

a) In blasting enclosures larger than 400 square feet (e.g. hangers) where breathing air is supplied through abrasive blasting helmets, and

b) When coatings and substrates are of less toxic materials than those discussed in para. 7.2.1.

Recirculated air must contain at least 25 percent outdoor air. Volume airflow rate must be sufficient to keep the contaminant below the PEL and 25 percent of the Lower Explosive Limit (LEL).

Follow the recirculated air guidelines set forth in the ACGIH Manual, 29 CFR 1910.94(a), and ANSI 9.4. They require sensitive and sophisticated equipment not usually found in Navy industrial settings.

The initial cost savings of a recirculating air system may be offset by the cost of the long term preventative maintenance program required for the control system and the replacement air components. Be aware that the preventative maintenance program often is one of the first programs cut during cost reduction efforts.

When using flammable or combustible materials, design the entire exhaust air system according to the following:

1) NFPA 68, Guide for Venting of Deflagrations,

2) NFPA 69, Standard on Explosion Prevention Systems,

3) NFPA 91, Standard for the Installation of Blower and Exhaust Systems for Dust, Stack, and Vapor Removal or Conveying, and

4) NFPA 654, Standard for the Prevention of Fire and Dust Explosions in the Chemical, Dye, Pharmaceutical and Plastics Industries.

Locate the air pollution equipment outdoors when blasting on aluminum or aluminum alloys according to NFPA 65, Standard for the Processing and Finishing of Aluminum.

7.3.1. Blasting Enclosures. Minimize the area of the blasting enclosure to reduce the volume airflow. Allow at least 4 feet of clearance between the workpiece and the ceiling, walls, and doors of the enclosure. Add extra clearance to accommodate internal fixtures such as tables and hoists.

Design the enclosure so the exhaust air flows either from ceiling to floor (downdraft) or from one wall to the opposite wall (crossdraft) as shown in Figures 54 and 55, respectively. Table 8 summarizes ANSI Z9.4 criteria specifying minimum flowrates for various sized booths.

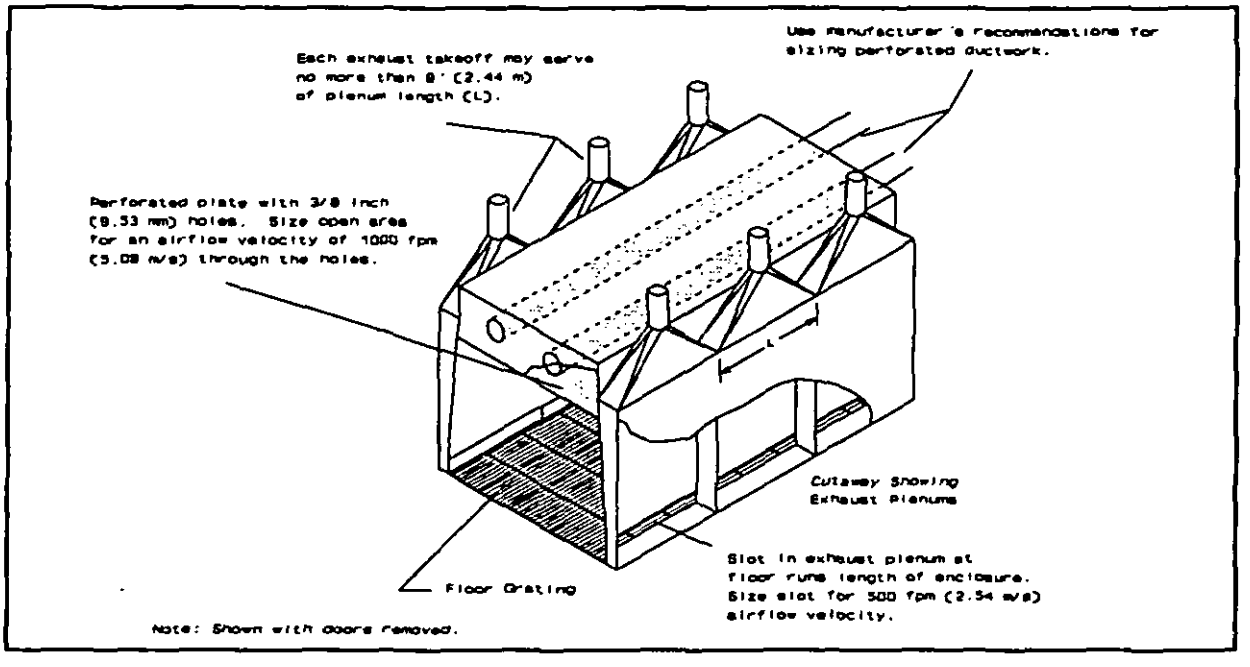

Figure 54
Downdraft Blast Enclosure

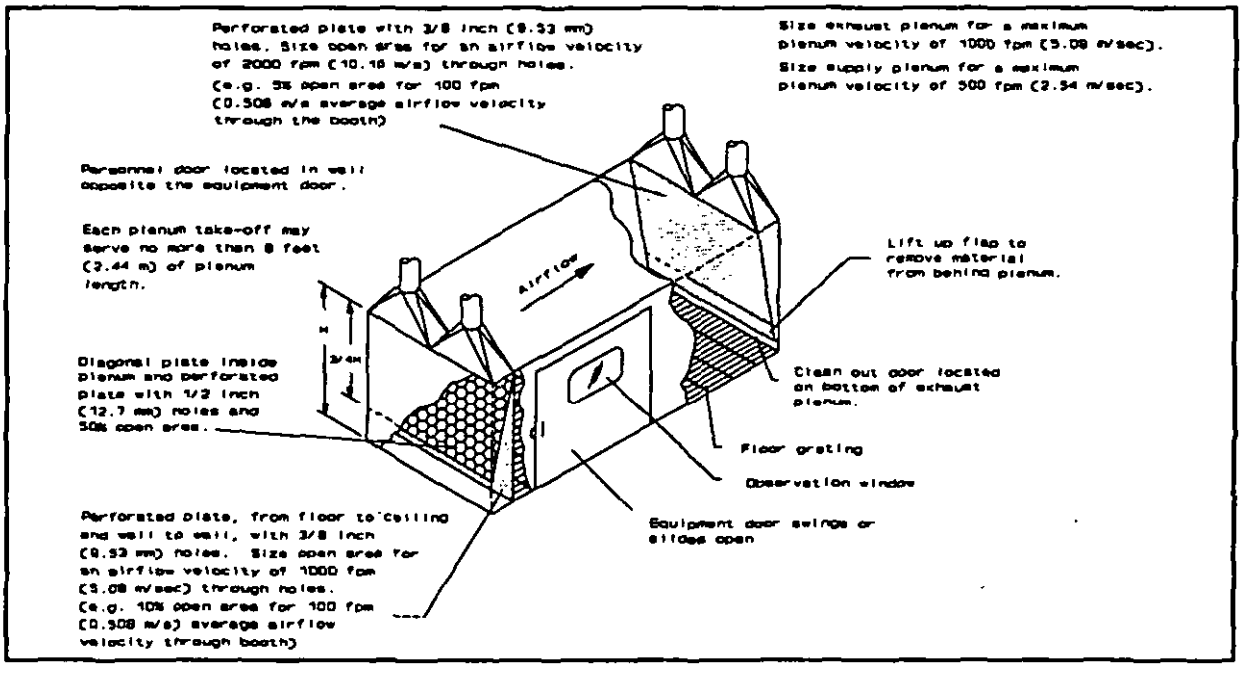

Figure 55
Crossdraft Blast Enclosure

Table 8
Air Velocities for Blasting Enclosures
units are in feet per minute (units in ( ) are in meters per second)

Downdraft					Cross-draft
Ft^2 of Floor Area (m^2 of Floor Area)	0-100 (0 to 9.29)	100-200 (9.29 to 18.6)	200-300 (18.6 to 27.9)	300-400 (27.9 to 37.2)	100
Type of Abrasives (1) Abrasives containing more than 5 percent free silica; materials that may generate airborne asbestos fibers or free-silica-containing dusts; coatings containing lead, chromates or other similarly toxic compounds having a permissible exposure limit of less than 1 mg/m^3.	90 (0.457)	70 (0.356)	60 (0.305)	60 (0.305)	100 (0.508)
(2) Abrasives containing 5 percent free silica or less; coatings having permissible exposure limits from 1 to 5 mg/m^3.	60 (0.305)	50 (0.254)	40 (0.203)	35 (0.178)	80 (0.406)
(3) Low toxicity materials, such as abrasives of steel or aluminum oxide and contaminants, such as iron oxide scale, having permissible exposure limits of 5 mg/m^3 or greater.	40 (0.203)	35 (0.178)	30 (0.152)	20 (0.102)	60 (0.305)
(4) Shot peening on clean metal with metal shot.	30 (0.152)	20 (0.102)	20 (0.102)	20 (0.102)	50 (0.254)

Note: 1) Ventilation rates may need to be greater than those in the table, depending on individual circumstances. Use higher rates when the composition of the workpiece is such that upon breakdown from the abrasive impact, toxic contaminants are released into the work area. Consider also the composition of the abrasive (e.g. beryllium in copper slag).

Consider the geometry of the enclosure, number of workers and their positions when selecting a crossdraft or a downdraft design.

a) Downdraft. A downdraft design is preferred since contaminated air is usually drawn away from the worker's breathing zone. When more than one operator works in an enclosure, contaminated air generated from one operation is less likely to migrate into another operator's breathing zone. Downdraft design provides superior visibility.

b) Crossdraft. Evaluate the operators work positions when locating the replacement and exhaust air plenums. Do not allow any operator to blast upstream of their coworkers. Choose crossdraft ventilation for hangers. A dead air space forms below the wings and body of the plane when using downdraft ventilation.

Use perforated plate, as shown in Figures 54 and 55, to uniformly distribute airflow over the entire cross-section of the enclosure. Figure 55 shows a diagonal plate inside the replacement air plenum. The plate helps evenly distribute air inside the plenum then across the plenum face.

Maintain a minimum airflow rate throughout the enclosure within 20 percent of the required downdraft or crossdraft flowrate.

Design flanged and tightly sealed doors. Make personnel doors operable from both inside and outside of the enclosure. Design material doors to be operable from both inside and outside the enclosure.

7.3.2 Media Reclaim. Do not integrate the exhaust ventilation system with the abrasive recovery system. Provide a separate abrasive recovery system. When the abrasive material fills up in an integrated system, the industrial ventilation system cannot provide sufficient airflow to protect the worker. Partial plugging is especially dangerous. Air still moves, but the volume is much lower than required. Worker protection is insufficient and media concentrations approach the lower explosive limit.

Consider pneumatic recovery instead of mechanical recovery such as rotary screw conveyors for plastic media recovery systems. The mechanical systems tend to abrade the media.

Protect the reclaim system and ductwork from moisture to reduce media plugging by preventing rain water intrusion into the system.

7.3.3 Blasting Cabinets. Install baffles around air inlets to prevent abrasive material leakage. Use a minimum inward air velocity of 500 fpm (2.54 m/s) at all operating openings. Discharge the exhaust air outside and replace it with 100 percent untempered outside air.

7.3.4 Ductwork. Size the exhaust ductwork to maintain a minimum transport velocity of 3500 fpm (17.8 m/s). Specify flat backed elbows (see Figure 56) for all ductwork carrying abrasive material. Design duct hangers with sufficient strength to support the ductwork half filled with material.

Provide cleanout doors adjacent to every bend and vertical riser. Space cleanout doors a maximum of 12 feet (3.66 m) apart for horizontal duct runs of 12 inches (0.305 m) or less in diameter. Space cleanout doors a maximum of 20 feet (6.0 m) apart in larger ducts. Refer to para. 2.1.3.1 for general duct considerations. Do not locate cleanout doors on the bottom side of ductwork.

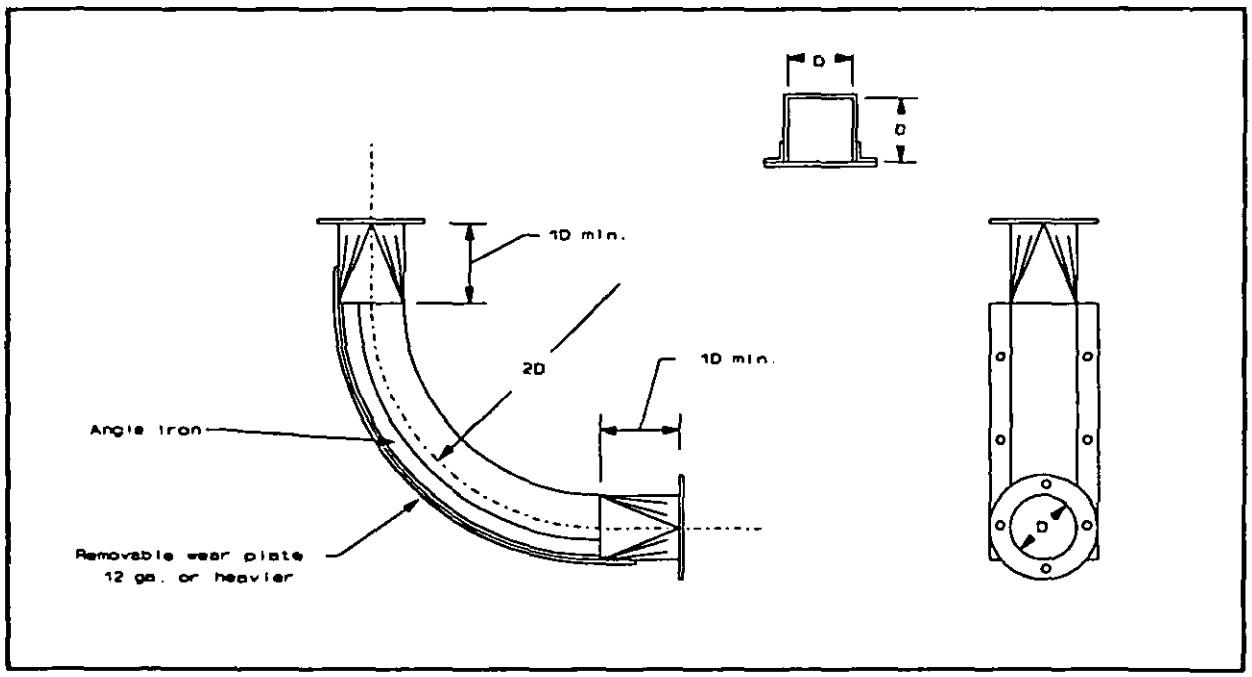

Figure 56
Flat Back Elbow

7.3.5 Fans. Use centrifugal fans with backward curved blades, whenever possible. Airfoil blades may be economically feasible on large projects such as hangers. Centrifugal fans with backward inclined blades are less efficient, but still acceptable.

Supply the replacement air mechanically with a fan, whenever possible. This improves system balance and control. The room static pressures might be greater than -0.10 inch wg (-2.49 Pa) when the replacement air is not mechanically supplied. The extra negative pressure reduces exhaust fan performance. Include the room static pressure and resistance through the filters and louvers when sizing the exhaust fan. Refer to para. 2.1.3.2 for further information about fan selection and connection.

7.3.6 Weather Stack Design and Location. Refer to para. 2.1.3.3 for design guidance for exhaust discharge stacks.

7.3.7 Air Cleaning Devices. Use a pulse-jet, pleated paper cartridge type collector. The collector shall have 99.9 percent weight arrestance efficiency according to ASHRAE Standard 52-76. Use an "air-to-cloth" ratio between 1.5:1 and 2:1. The air-to-cloth ratio is the ratio of flowrate in cfm to filter area in square feet.

a) Include the following pulse-jet controls:

1) Pulse interval range of 0 to 5 minutes.

2) Pulse duration range of 0 to 2 seconds.

3) Magnehelic gauge with remotely mounted alarm.

4) Option to use upper static pressure setpoint on photohelic gauge to trigger cleaning cycle.

b) Design the baghouse with the following criteria:

1) Perforated plate at the inlet to evenly distribute incoming dirty air across filters.

2) Access hatch on baghouse inlet, 24 inches x 24 inches minimum (0.610 m x 0.610 m).

3) Access hatch on hopper, 24 inches x 24 inches minimum (0.610 m x 0.610 m).

4) Rotary airlock, 10 inches (0.254 m) diameter minimum, on hopper throat.

5) Replaceable explosion vents designed per NFPA-68 located on baghouse hoppers where the potential for explosion of accumulated dust exists.

6) Platforms leading to all elevated access hatches.

7) Fan located on the clean side of the baghouse.

c) NFPA 65, Section 2-1.5 states "Dry-type dust collectors shall be located outside of the building."

7.4 Replacement Air. Design the replacement air system to maintain a pressure (relative to the atmosphere) ranging from -0.02 to -0.06 inches wg (-4.98 to -14.9 Pa) in the abrasive blasting enclosure. Maintain enclosed mechanical equipment spaces at a pressure (relative to the atmosphere) ranging from -0.01 to -0.02 inches wg (-2.49 to -4.98 Pa). Maintain the administrative spaces and locker rooms at a pressure (relative to the atmosphere) ranging from +0.0 to +0.05 inches wg (+0.0 to +12.4 Pa).

Design a dedicated replacement air system for each abrasive blasting enclosure. Design abrasive blasting enclosures with ceiling or wall supply plenum located directly opposite the exhaust (ceiling to floor airflow or wall to opposite wall). Refer to para. 2.1.3.5 for detailed design criteria.

7.4.1 Heating and Air Conditioning. Design all heating and air conditioning using NAVFAC DM-3.03. Do not recirculate exhaust air from blasting operations except under conditions allowed in para. 7.2 and 7.3.

Require the building contractor and manufacturers representatives to train maintenance and shop personnel on all the ventilation equipment, especially the recirculating systems. Consider implementing a long term maintenance contract.

7.5 System Controls. Design system controls using para. 2.1.3.6 and the following criteria.

a) Position an annunciator panel at the entrance to the blasting enclosure so operators can monitor operating gauges.

b) Install differential pressure sensors at locations that are representative of the average static pressure in each controlled space. This will ensure that desired differential pressures are maintained.

c) Trigger a timer if the pressure varies from the specified range. Select a timer that automatically resets if the problem is corrected within 60 seconds.

d) Trigger both visible and audible alarms if the system cannot correct the problem within the allotted time. Install multiple alarm beacons if the operator's view is obscured during blasting.

e) Interlock the blasting tool power supply with the ventilation system's on-off switch. This will prevent the use of blasting tools without ventilation controls.

7.6 Safety and Health Items.

7.6.1 Breathing Air. 29 CFR 1910.94(a)(5) describes the respiratory protection equipment required in abrasive blasting facilities. When performing work inside a blasting enclosure or hanger, the operator wears a continuous-flow, air-line respirator that covers the wearer's head, neck, and shoulders. Provide each respirator hood with an adjustable, vortex-type climate control system.

Provide several air hose connection points along the perimeter of the enclosure to allow the operator freedom of movement. Design the respirator air supply using 29 CFR 1910.134(d) and NAVFAC DM-3.5.

7.6.2 Noise. Install engineering controls to reduce worker's exposure to noise wherever feasible. Carefully select the blast nozzle. This is an important role, since noise generation is a high power function of discharge velocity. Consider using sound barrier or dampening material on enclosure walls. Protect the absorptive material from abrasive material impingement to the maximum extent possible. Isolate the air compressor, blasting reclaim, and air pollution equipment to minimize noise exposure in the shop.

7.6.3 Explosiveness. Organic abrasive blasting media can explode if the dust concentration reaches the Minimum Explosible Concentration (MEC) and an ignition source exists. An ignition source can be as simple as static electricity. MEC is also known as the Lower Explosive Limit (LEL). Agricultural media (e.g. peach pits, rice hulls, walnut shells) are particularly susceptible to explosions. Avoid using agricultural media whenever possible.

Obtain the MEC from each blasting media manufacturer. The airborne concentration of -200 mesh combustible dust particles shall be no more than 25 percent of the MEC. Calculate the air volume required to maintain an airborne concentration for the specific abrasive below 25 percent of the MEC. Compare it to the volume required in Table 8. Use the higher of the two volumes.

Currently, there is no real-time measuring device to continuously monitor the heavy dust concentrations found in blasting booths. Use a deductive method to determine if the booth operates below the MEC.

Test for the -200 mesh combustible dust particles in the enclosure under the worst-case condition before accepting the system. Compare these results with media manufacturers data to verify that the system operates below 25 percent of the MEC. At the same time, measure the volume airflow and static pressure at the fan inlet or at the booth outlet to establish a reference point. See para. 2.1.3.7 for static pressure taps and volume flow rate test locations. See Appendix C for unit conversion and MEC for typical organic media.

Post these calculations and test results outside the blasting enclosure and in the Facility Standard Operating Procedures. Record weekly the static pressures from the annunciator panel (described in para. 7.5) to detect any changes in the system.

7.6.4 Access. Provide personnel an access door with an observation window. Use several doors in large enclosures. Provide emergency exits on the opposite walls. Consider adding another large observation window located in a wall for operator safety.

Use safety glass for observation windows. Protect the window with outside screening. The screen retains the glass if an explosion occurs.

Section 8: PAINT SPRAY FACILITIES

8.1 Function. Paint spray shops and facilities provide surface finishing capabilities for a wide range of parts, equipment, vehicles, and aircraft. Spray booth sizes range from bench type units designed to paint small parts, to chambers that are used for painting aircraft. Paint spray shops and facilities shall include a shop area, a mechanical equipment area, and a protective clothing decontamination area.

8.1.1 Design Criteria. Design the facility using general technical requirements in Section 2 of this handbook and the specific requirements in this section.

8.2 Operational Considerations. During paint spray operations, paint is atomized by a spray gun and then deposited on the object being painted. Depending on the application equipment and spray method used, transfer efficiencies vary greatly. Transfer efficiency is the amount of paint solids deposited on a surface divided by the total amount of paint sprayed, expressed as a percentage. Overspray is the paint that is sprayed but not deposited on the surface to be painted.

Spray painting equipment must conform to national, state, and local emission control requirements. In California, the South Coast Air Quality Management District requires spray methods with at least 65 percent transfer efficiency. Currently, similar regulations are pending or under consideration in 28 other states.

Five primary types of paint spraying equipment and their typical transfer efficiencies include:

a) Conventional air spray (25 percent transfer efficiency),

b) Airless spray (35 percent transfer efficiency),

c) Air-assisted airless spray (45 percent transfer efficiency),

d) Electrostatic spray (65 percent transfer efficiency), and

e) High volume/low pressure (HVLP) spray (up to 75 percent transfer efficiency).

Use high transfer efficiency application equipment such as electrostatic or HVLP spray guns to reduce overspray, This not only saves paint cost, but also reduces volatile organic compound (VOC) emissions and maintenance requirement.

Heat paint prior to application whenever possible. The heated paint has a lower viscosity, which enables the paint to be sprayed at a lower pressure, thereby minimizing the amount of overspray generated. The lower viscosity also decreases the quantity of solvent which must be used to thin the paint prior to spraying. This results in reduced solvent consumption and VOC emissions.

8.3 Exhaust Air. Design the entire exhaust system according to 29 CFR 1910.94(c), 29 CFR 1910.107, NFPA 33, NFPA 68, NFPA 91, and NFPA 654. The air velocity requirement, combined with an adequate total air volume exhausted, serves to dilute the solvent vapor to at least 25 percent of the lower explosive limit (LEL). In addition, maintain employee exposure to any toxic substances inside the booth below the permissible exposure limits (PEL).

a) Design the exhaust air system to draw the air past the operator, toward and past the workpiece, and into the exhaust intake, thereby giving maximum protection to the worker.

b) Refer to Table 9 for airflow requirements. Table 9 summarizes 29 CFR 1910.94(c)(6) criteria specifying minimum flowrates for various sized booths.

c) Discharge all exhaust air to the outdoors after passing through an appropriate air cleaning device and exhaust stack.

d) Do not recirculate exhaust air.

8.3.1 Spray Area Design. The size and shape of workpieces which require spray painting vary greatly. Design the spray booths to enclose the painting operation to the maximum possible extent in order to contain the paint overspray with a minimum volume of air and to avoid disturbances from room air currents.

8.3.1.1 Spray Booths. *Design paint spray booths according to* 29 CFR 1910.94, 29 CFR 1910.107 and Figure 57. The airflow must be in a direction that carries the contaminated air away from the workers breathing zone. If necessary, provide manlifts, workpiece turntables, or other means to maintain the proper orientation of air flow.

Table 9
Minimum Maintained Velocities into Spray Booths

Operating conditions for objects completely inside booth	Crossdraft (fpm)	Airflow velocities (fpm)	
		Design	Range
Electrostatic and automatic airless operation contained in booth without operator.	negligible	50 large booth	50-75
Air-operated guns, manual or automatic	Up to 50	100 small booth 100 large booth	75-125 75-125
Air-operated guns, manual or automatic	Up to 100	150 small booth 150 large booth	125-175 125-175
		200 small booth	150-250

Notes: 1) The effectiveness of the spray booth depends on the relationship of the depth of the booth to its height and width.

2) Design the booth to eliminate crossdrafts. Do not permit crossdrafts in excess of 100 fpm.

3) Excessive air pressures result in loss of both efficiency and material waste in addition to creating backlash that may carry overspray and fumes into adjacent work areas.

4) Designed booths with velocities shown in the column headed "Design". However, booths operating with velocities shown in the column headed "Range" are in compliance with 29 CFR 1910.94(c).

8.3.2 Ductwork.

a) Design the plenum-to-duct-transition with an included angle of no greater than 90 degrees.

b) Specify that the length of the hood served by each exhaust plenum shall not exceed 8 feet (2.44 m). For example, hoods between 8 and 16 feet (2.44 and 4.88 m) in length shall have two exhaust takeoffs.

c) Size ductwork to maintain a minimum airflow velocity of 2500 fpm (12.7 m/s).

d) Design duct hangers with sufficient strength to support the ductwork half filled with material.

e) Provide cleanout doors adjacent to every bend and vertical riser. Space cleanout doors a maximum of 12 feet (3.66 m) apart for horizontal duct runs of 12 inches (0.305 m) or less in diameter. Space cleanout doors a maximum of 20 feet (6.0 m) apart in larger ducts. Refer to para. 2.1.3.1 for general duct considerations. Do not locate cleanout doors on the bottom side of ductwork.

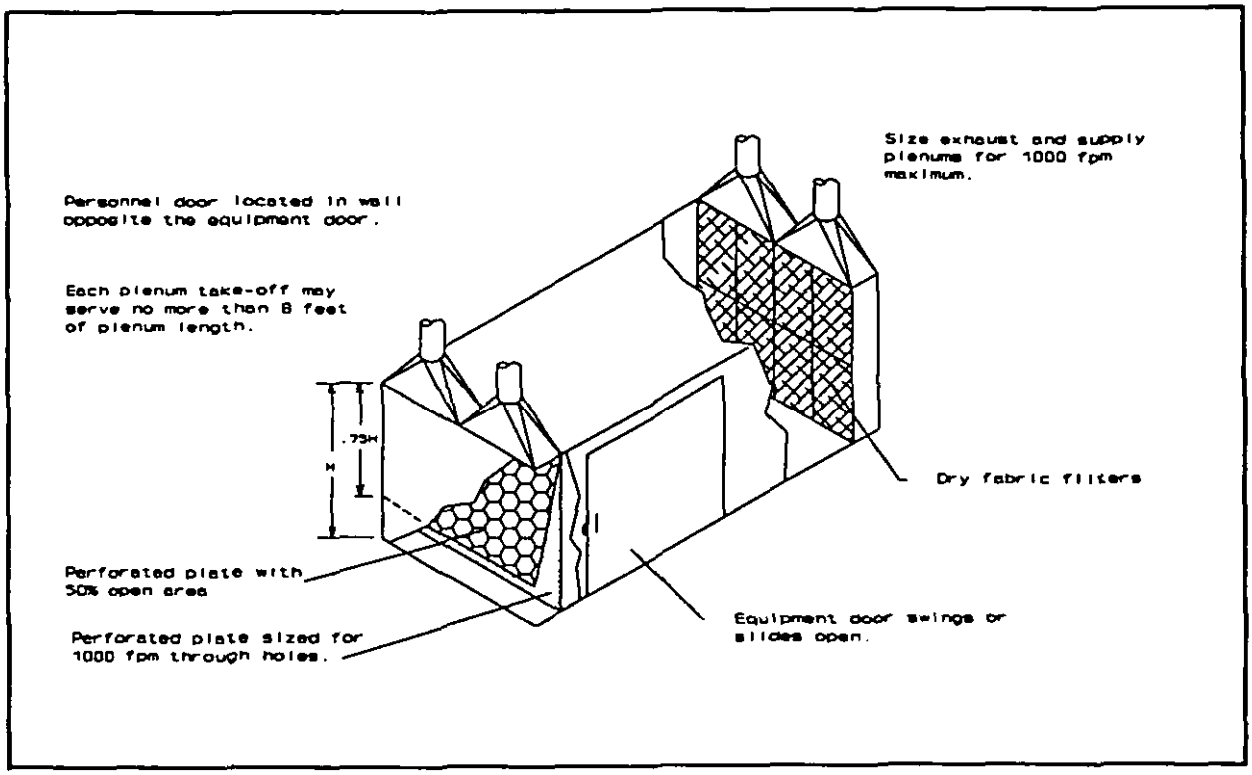

Figure 57
Spray Painting Booth

8.3.3 Fans. Use centrifugal fans with backward curved blades, whenever possible. Airfoil blades may be economically feasible on large projects such as hangers. Centrifugal fans with backward inclined blades are less efficient, but still acceptable. A tubeaxial or vaneaxial fan is also appropriate for low pressure applications (fan static pressure less than 2 inches wg).

Use explosion proof fixtures and a fan. Do not place electric motors, which drive exhaust fans, inside booths or ducts. Ensure the belts and pulley are not in contact with the airstream. Refer to para. 2.1.3.2 for more detailed information about fan selection.

8.3.4 Weather and Stack Design and Location. Refer to para. 2.1.3.3 for design guidance for exhaust stacks.

8.3.5 Air Cleaning Devices. Provide replaceable, dry filter pads that cover as much of the entire wall opposite the supply air as possible (see Figure 57). Filter pads not only remove paint overspray from the air stream, but also help to distribute air within the booth.

8.4 Replacement Air. Design the replacement air system to maintain a pressure (relative to the atmosphere) ranging from -0.02 to -0.06 inches wg (-4.98 to -14.9 Pa) in the spray booth. This will prevent paint overspray and vapors from escaping the booth and migrating into adjacent work areas.

Design a dedicated replacement air system for each spray booth. Design the paint area so that the replacement air enters directly opposite from the area where the air is exhausted. Refer to para. 2.1.3.5 for detailed design criteria.

The distribution of replacement air within the spray booth is as significant as the average air velocity through the booth. Distribute the replacement air evenly over the entire cross section of the booth to prevent turbulence or undesirable air circulation within the booth. The preferred means of distributing the replacement air is through perforated plate as shown in Figure 57.

8.4.1 Heating and Air Conditioning. Design all heating and air conditioning using NAVFAC DM-3.03. Review the paint drying requirements before specifying temperature and humidity ranges. Do not recirculate exhaust air.

8.5 System Controls. Design system controls according to para. 2.1.3.6 and the following criteria:

a) Position an annunciator panel at the entrance to the spray booth so operators can monitor operating gauges.

b) Install differential pressure sensors at locations that are representative of the average static pressure in each controlled space. This will ensure that desired differential pressures are maintained.

c) Trigger a timer if the pressure varies from the specified range. Select a timer that automatically resets if the problem is corrected within 60 seconds.

d) Trigger both visible and audible alarms if the system cannot correct the problem within the allotted time. Install multiple alarm beacons if the operator's view is obscured during painting.

e) Provide automatic, high-voltage disconnects for conveyor failure, fan failure, or grounding for electrostatic spray booths.

8.6 Safety and Health Items.

8.6.1 Respiratory Protection. Provide the respiratory protection when spraying toxic coatings such as lead, chromium, or reactive compounds (isocyanates and epoxy curing agents). 29 CFR 1910.1000 prescribes the maximum allowable concentrations of toxic substances. 29 CFR 1910.94(c)(6) mandates respiratory protection when an operator must position himself in a booth downstream of the object being sprayed.

Provide respiratory protection in the absence of the above conditions. Many other paint constituents are also harmful to the eyes and skin as well as the respiratory system.

When supplied air respirators are used, provide several air hose connection points along the perimeter of the booth to allow the operator freedom of movement. The connection for the air-line respirator hose must not be the same as the connection for the vacuum hose. This prevents inadvertent use of unfiltered plant compressed air for breathing air. Design the respirator air supply using 29 CFR 1910.134(d) and NAVFAC DM-3.5.

Section 9: FOUNDRIES

9.1 Function. Founding or casting is a metal forming process by which molten metal is poured into a prepared mold to produce a metal object called a casting. The foundry considered here is typical of a small operation. Refer to the ACGIH Manual for processes not addressed here and for further information on operations using non-standard air. Ventilation is addressed for the following processes and their associated hazards:

a) Mixing and Mulling. The mixing of sand with organic binding agents in order to keep the sand bound for molding. Potential hazard is silica dust, which may cause silicosis, lung cancer and other respiratory disorders.

b) Melting. The process of melting metal and alloys in a furnace. Potential hazards are:

1) Metal oxide fumes, which may cause metal fume fever.

2) Lead fumes, if brass is being melted, which may impair the central nervous system and kidneys.

3) Infrared radiation, which may damage skin and eyes.

4) Carbon monoxide from gas furnaces, which may cause tissue anoxia.

5) Heat stress.

c) Pouring. The process of pouring the molten metal into the sand molds. Potential hazards are:

1) Vapors from organic binding agents.

2) Silica dust.

3) Metal oxide fumes.

4) Lead fumes.

5) Infrared radiation.

6) Heat stress.

d) Shakeout. The removal of sand, scale, and excess metal from the castings by vibration. Potential hazard is silica dust.

9.1.1 Design Criteria. Design the facility using general technical requirements in Section 2 of this handbook and the specific requirements in this section.

9.2 Operational Considerations. Foundry operations generate dust, metal oxide fumes, lead fumes, carbon monoxide, and organic binding agent vapors. 29 CFR 1910.1000 regulates employee exposure to air contaminants. 29 CFR 1910.1025 regulates employee exposure to lead.

The presence of molten metal in foundries creates hazardous work areas warranting special attention to worker safety. Provide easy equipment access to improve safety. Design the ventilation system to prevent interference with equipment access. Sometimes, as in the case of ladle transport, it is not easy to install a ventilation hood to control a process, because it may cause interference. In most cases, however, with careful consideration hoods can be installed to control a process without interference.

9.3 Typical Floor Plans. Figure 58 shows a small foundry floor plan. Locate the molds close to the furnaces to minimize the transport distance. Controlling fumes during transport is very difficult. Locate all baghouses and fans outside the building.

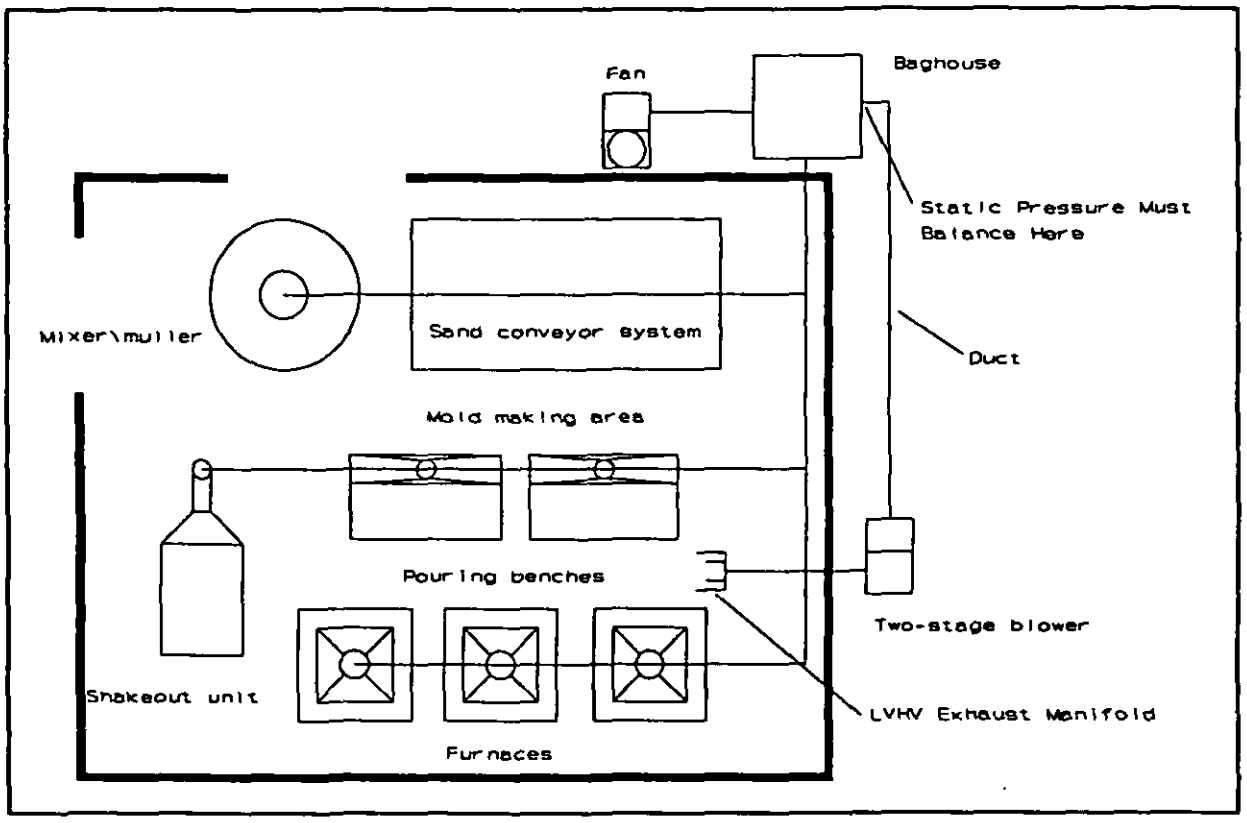

Figure 58
Typical Small Foundry Floor Plan

9.4 Exhaust Air. Design the exhaust air system to capture contaminants at the point of generation. Any air exhausted during pouring, molten transport, and melting, will be heated as it passes over the process. Since the exhaust air is no longer at room temperature, 70 degrees Fahrenheit (21 degrees Celsius), use non-standard air conditions for volume flowrate and fan static pressure calculations. See Appendix D for non-standard air calculations.

9.4.1 Hood Design. Foundry hoods generally control either dust (from mold materials) or high temperature fumes and vapors.

a) Use stainless steel sheet metal for the hood when the temperature of the exhaust air stream is likely to exceed 400 degrees Fahrenheit (204 degrees Celsius). Water cooled or refractory linings are alternatives to stainless steel.

b) Install baffles on exhaust hoods to reduce crossdrafts and to improve hood efficiency.

c) Refer to the drawings in the ACGIH Manual, Chapter 10 listed in para. 9.4.1.1 through para. 9.4.1.4 to specify capture velocity for each hood.

d) Size slots for 2000 fpm (10.2 m/s).

e) Design the plenum velocity less than or equal to one half of the slot velocity.

f) Design hood-to-duct transition with an included angle of no more than 90 degrees.

g) Specify that the length of the hood served by each exhaust plenum shall not exceed 8 feet (2.44 m). For example, hoods between 8 and 16 feet (4.88 m) in length shall have two exhaust takeoffs.

h) Provide cleanout doors in the plenum for removal of accumulated particulates.

9.4.1.1 Mixer/Muller. Design a minimum capture velocity of 150 fpm (0.762 m/s). Provide additional ventilation when flammable solvents are used. The dilution ventilation rates should maintain concentrations within the muller below 25 percent of the lower explosive limit (LEL). Following are the titles and figure numbers for mixer and muller detail design criteria in the ACGIH Manual, Chapter 10:

Title	Figure No.
Mixer and Muller Hood	VS-60-01
Air-Cooled Mixer and Muller	VS-60-02

9.4.1.2 Furnaces. There are a variety of hood designs for metal melting furnaces that use either natural gas or electric resistance as the heat source. Provide exhaust ventilation to control the specific oxides associated with the metal being melted or the contaminants carried in the scrap charge. Following are the titles and figure numbers for the metal melting furnace detail design criteria in the ACGIH Manual, Chapter 10:

Title	Figure No.
Melting Furnace Crucible, Non-Tilt	VS-55-01
Metal Furnace, Tilting	VS-55-02
Melting Furnace, Electric, Top Electrode	VS-55-03
Melting Furnace, Electric, Rocking	VS-55-04
Melting Pot & Furnace	VS-55-05
Crucible Melting Furnace, Highly Toxicity Material	VS-55-06
Induction Melting Furnace, Tilting	VS-55-07

9.4.1.3 Mold Pouring Station. Design a pouring station as shown in the ACGIH Manual, Chapter 10, Figure VS-55-10.

9.4.1.4 Shakeout Unit. There are three different shakeout hood designs. The enclosing shakeout hood requires the smallest airflow rate. The side-draft shakeout hood improves access but requires additional airflow rates. The downdraft shakeout is the least effective in controlling contaminants and requires the highest ventilation rates. Do not use downdraft shakeout hood for hot casting. Following are the titles and figure numbers for the shakeout hood detail design criteria in the ACGIH Manual, Chapter 10:

Title	Figure No.
Foundry Shakeout, Enclosing	VS-20-01
Foundry Shakeout, Side Draft	VS-60-02
Foundry Shakeout, Downdraft	VS-60-03

9.4.2 Ductwork and Fans.

9.4.2.1 Ductwork.

a) Use SMACNA class III duct construction standards, since light concentrations of abrasive sand are drawn into foundry ductwork.

b) Design the minimum transport velocity according to the ACGIH Manual drawings referenced in para. 9.4.1.1, 9.4.1.2, 9.4.1.3 and 9.4.1.4.

c) Install cleanout access doors near bends and vertical risers to allow sand removal in case settling occurs. Require regular inspection and cleaning to prevent buildup of sand, oil, and water condensate on the inner walls of the duct.

d) Use stainless steel when the air temperature may exceed 400 degrees Fahrenheit (204 degrees Celsius).

e) Design duct supports slightly larger than the duct to allow for duct expansion at higher temperatures. Ensure the duct does not contact any flammable material.

f) Design the entire air exhaust system according to NFPA 91.

g) Use ball joints and telescopic ducts instead of flex ducts for movable ducts.

h) Refer to para. 2.1.3.1 for more information regarding duct fabrication and installation.

9.4.2.2 Fans. Use backward curved airfoil type centrifugal fans for this application. Backward airfoil type centrifugal fans are the most efficient and quiet, but a centrifugal fan with backward inclined blades is also acceptable. Locate the exhaust fan downstream from the air cleaning device. Otherwise, the abrasive action of the particulates and the accumulation of sludge will destroy the fan blades. Locate the fan outside the shop to reduce the noise and keep the duct negatively pressurized the inside shop. Refer to para. 2.1.3.2 for general considerations.

9.4.3 Weather Stack Design and Location. Design the exhaust stack according to criteria in para. 2.1.3.3. Refer to SMACNA publication, Guide for Steel Stack Design and Construction, for proper stack construction.

9.4.4 Air Cleaning Devices. Consult local air pollution authorities for air cleaning requirements. Figure 58 shows the recommended location of the air cleaning device with respect to the fan, the vacuum system, and the exhaust hoods.

A high-efficiency dust collector will be appropriate for many installations. High temperature cartridges may be required depending on the airstream temperature. Ground the dust collector cartridges to protect against static electricity buildup in the baghouse and install an explosion vent designed according to NFPA 68.

Use high pressure, reverse pulse air jets to clean the baghouse fabric when the pressure drop across the baghouse reaches a preset limit. This type of cleaning cycle is referred to as "demand pulse." Use a photohelic gauge as the control mechanism for the on-off pulse air jet switch.

9.4.5 Industrial Vacuum System. Provide a Low Volume High Velocity (LVHV) vacuum system (see Figure 58) to exhaust silica dust and metal chips. Good housekeeping with industrial vacuum systems has a substantial impact on lead levels in brass melting and pouring operations.

Design the vacuum system according to the following criteria:

a) Use a multistage centrifugal blower for the vacuum system.

b) Feed the blower directly into the dirty side of the baghouse used by the industrial exhaust system to minimizes the number of dust collection points.

c) Design the vacuum system duct to balance with the exhaust system duct where the two systems connect.

d) Use the manufacturer's data to complete the design because the LVHV system design data is largely empirical.

e) Design the entire vacuum system according to NAVFAC DM-3.5, Compressed Air and Vacuum Systems.

9.5 Replacement Air. Design replacement air systems that modulate airflow to maintain a pressure (relative to the atmosphere) ranging from -0.02 to -0.06 inches water gauge (wg) (-4.97 Pascal (Pa) to -14.9 Pa) in the shop space. A slight negative pressure will prevent contaminated foundry air from migrating into clean spaces. Refer to para. 2.1.3.5 for replacement air system criteria.

9.5.1 Quantity and Distribution. Distribute replacement air to produce a laminar flow of air from supply to exhaust in the work space. Refer to para. 2.1.3.5 for design criteria.

9.5.2 Heating and Air Conditioning. Provide a dedicated replacement air system for each ventilated space. Temper the air according to NAVFAC DM-3.03. Do not recirculate exhaust air.

9.6 System Controls. Design system controls according to para. 2.1.3.5 and the following criteria.

a) Post signs that state

CAUTION: DO NOT OPERATE FURNACE WITHOUT VENTILATION CONTROL.

b) Interlock the equipment power supply with the ventilation system's on-off switch. This will prevent the use of the mixer, furnace, shakeout unit, and pouring area without ventilation control.

9.7 Safety and Health Items. Refer to the NIOSH publication 85-116 Recommendations for Control of Occupational Safety and Health Hazards in Foundries, Appendix F, for OSHA regulations pertaining to the foundry industry.

Section 10: WOOD SHOP FACILITIES

10.1 Function. Wood shops throughout the Navy differ in size and function. Therefore, use the design criteria in this chapter as broad guidelines for developing ventilation systems for wood shops.

10.1.1 Design Criteria. Design the facility using general technical requirements in Section 2 of this handbook and the specific requirements in this section.

10.2 Health Considerations. The accumulation of wood dust creates potential health and housekeeping problems, and fire hazards. Exposure to wood dust has long been associated with a variety of adverse health effects, including dermatitis, allergic respiratory effects, and cancer. As many as 300 species of wood dust have been shown to cause dermatitis. The most common allergic response to wood dust is asthma. In addition, wood dust has been shown to cause mucosal and nonallergic respiratory effects such as throat irritation and bleeding, wheezing, sinusitis, and prolonged colds.

Although NIOSH studies have linked exposure to wood dust with various forms of nasal and lung cancers, OSHA contends the results are not conclusive. However, OSHA concludes that wood dust exposures are harmful and cause loss of functional capacity and material impairment of health. Therefore, treat wood dust as a potentially dangerous and carcinogenic contaminant.

In 1989, OSHA proposed a single eight hour time weighted average (TWA) of 5 milligrams per cubic meter and a short term exposure limit (STEL) of 10 milligrams per cubic meter for both hardwood and softwood. OSHA also proposed a separate eight hour TWA of 2.5 milligrams per cubic meter for Western red cedar, a highly allergic species of softwood.

ACGIH recommends a single TWA threshold limit value (TLV) of 5 milligrams per cubic meter and a STEL of 10 milligrams per cubic meter for softwood. For certain hardwoods, such as beech and oak, ACGIH recommends a TLV-TWA of 1 milligram per cubic meter.

Design the ventilation system to comply with the most stringent criteria.

10.3 Typical Floor Plans. Design machine, floor, and isle layouts as described in ANSI O1.1, Safety Requirements for Woodworking Machinery. Design the ventilation system to complement equipment layout and minimize housekeeping.

10.4 Exhaust Air.

10.4.1 System Design. Design the system using the velocity pressure method explained in Chapter 5 of the ACGIH Manual. Ensure that the branch ducts of equipment hoods with the greatest resistance are short, and enter the main duct close to the air cleaning device.

In a wood shop facility, only 40 or 50 percent of the machines are usually running at one time. Consider designing the system for only 50 percent of the total exhaust volume. Do not ventilate those machines which are not operating. Consider using industrial grade solenoid switches to open or close dampers of machines as they are turned on or turned off, respectively.

10.4.2 Hood Design. Provide a hood with any machine which produces fine dust. This includes sawing, shaping, planing, and sanding operations.

Refer to VS-95-01 through VS-95-20 in the ACGIH Manual for specific hood designs. Construct hoods of noncombustible materials. Ensure the hoods do not interfere with worker operations. Figure 59 shows general hood design characteristics.

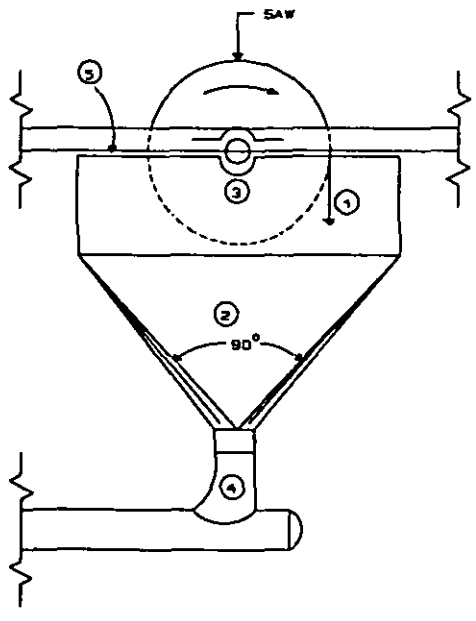

WHEN DESIGNING A HOOD, KEEP THESE POINTS IN MIND.

1. TAKE ADVANTAGE OF THE TANGENTIAL FLOW OF THE DUCT PARTICLES.
2. DO NOT EXCEED 90 DEGREES FOR THE INCLUDED ANGLE OF TRANSITION.
3. ENCLOSE OPERATION AS MUCH AS POSSIBLE WITHOUT INTERFERENCE.
4. SIZE THE DUCT FOR A MINIMUM TRANSPORT VELOCITY (MTV) OF 3500 FPM
5. ACHIEVE A VELOCITY OF 2000 FPM AT THE HOOD INLET.
6. APPROXIMATE UNKNOWN HOOD DESIGN LOSSES FROM FIGURE 5-15 OF THE ACGIH MANUAL.

Figure 59
General Hood Design

10.4.3 Ductwork. Table 10.95.1 of the ACGIH Manual gives exhaust volumes for specific wood shop machines. Size the ductwork to maintain a minimum transport velocity of 3500 fpm (17 m/s) or as specified in VS-95-01 through VS-95-20. Refer to para. 2.1.3.1 of this handbook for general ductwork design.

In most cases, locate ductwork along the ceiling and walls. However, running ductwork under the floor of the shop may reduce duct lengths and leave more working space around machinery.

Specify duct hangers that have sufficient strength to support the ductwork should it become half filled with material.

Provide cleanout doors adjacent to every bend and vertical riser. In horizontal duct runs, space cleanout doors no more than 12 feet (3.66 m) apart in ducts that are 12 inches (0.305 m) or less in diameter. Space cleanout doors no more than 20 feet (6.0 m) apart in larger ducts. Do not locate cleanout doors on the bottom side of ductwork. Figure 8-4 in the ACGIH Manual shows examples of cleanout door designs.

10.4.4 Fans. Use a centrifugal fan with backward inclined blades for wood shop exhaust systems. Place the fan downstream of the air cleaning device. Specify a Class II construction fan. This fan is specifically designed for light dust applications. Refer to para. 2.1.3.2 for more information on fan selection.

10.4.5 Weather Stack Design and Location. Use a vertical discharge stack with a no loss stackhead for wood shop facilities. Do not use a horizontal discharge stack. Refer to para. 2.1.3.3 for more information on stack design.

10.4.6 Air Cleaning Devices. Use high efficiency dust collectors with fabric filter media. They are effective in removing both large and microscopic dusts. The main parameters for selecting an air cleaning device are volume flowrate and particle size distribution. Obtain particle size distributions from either particle sampling methods or health research data.

10.4.7 Floor Sweeps. Install floor sweeps to assist in housekeeping. Provide one floor sweep for every 20 feet (6.1 m) of straight, horizontal duct. Design the sweeps to exhaust between 800 and 1400 cfm (0.38 and 0.66 cubic meters per minute), depending on the size of the shop. Include these exhaust hoods in design calculations. Figure 60 shows a basic floor sweep design.

10.5 Replacement Air. Design replacement air systems to maintain a pressure (relative to the atmosphere) ranging from -0.02 to -0.06 inches wg (-4.97 Pascal (Pa) to -14.9 Pa) in the shop space. Refer to para. 2.1.3.5 for replacement air system criteria.

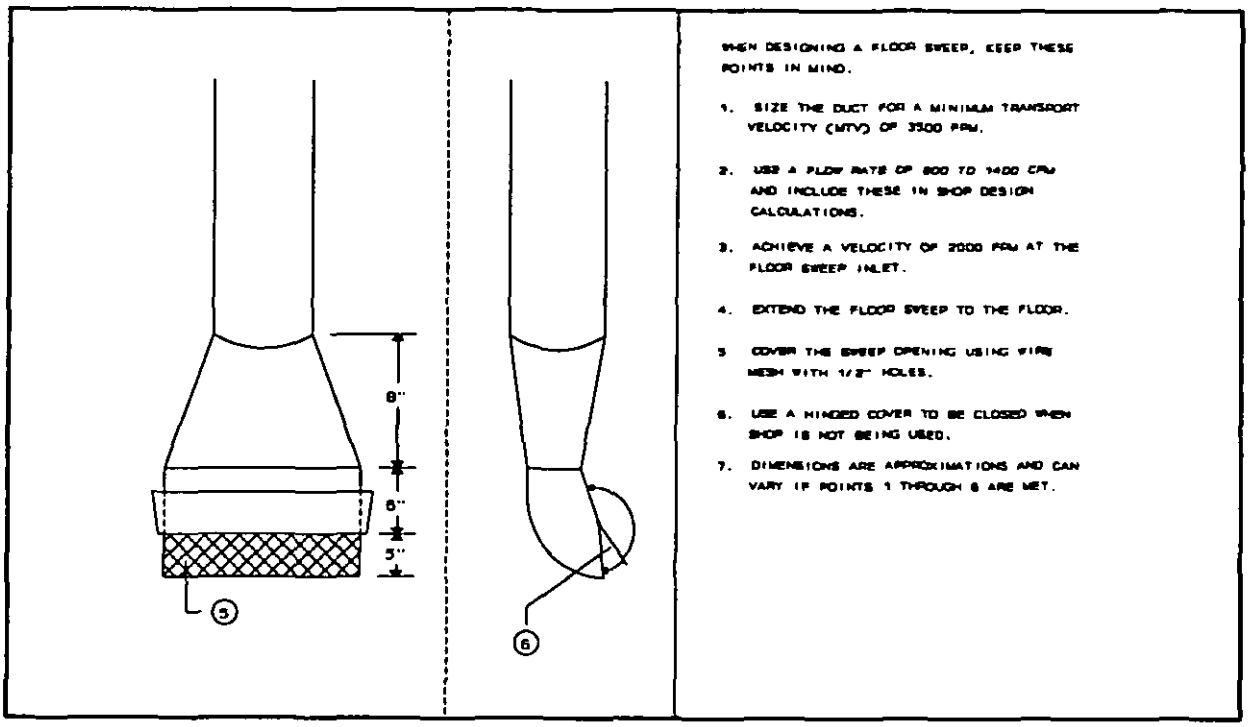

Figure 60
Floor Sweep

10.5.1 Quantity and Distribution. Distribute replacement air to produce a laminar flow of air from supply to exhaust in the work space. Use the vertical supply method (downdraft).

10.5.2 Heating and Air Conditioning. Provide each ventilated space with a dedicated replacement air system. Provide heating and cooling according to NAVFAC DM-3.03. Do not recirculate exhaust air.

10.6 System Controls. Design system controls according to para. 2.1.3.6 and the following criteria.

a) Position the annunciator panel at the entrance to the dirty space so operators can monitor operating gauges.

b) Install differential pressure sensors at locations that are representatives of the average static pressure in each controlled space. This will ensure that desired differential pressures are maintained.

10.7 Safety and Health Items. Design the facility according to NFPA 664, Standard for the Prevention of Fires and Explosions in Wood Processing and Woodworking Facilities, since wood dust is an explosion hazard. Refer to section 9.4 of ANSI O1.1 for personal protective equipment. Refer to ANSI Z88.2 for practices for respiratory protection.

APPENDIX A

DESIGN CALCULATION EXAMPLES FOR REPRESENTATIVE METAL CLEANING AND ELECTROPLATING HOODS

Design Calculation Example I: Lateral Exhaust Hood with Baffles
Design Calculation Example II: Pull-Pull Exhaust Hood without Baffles
Design Calculation Example III: Pull-Pull Exhaust Hood with Baffles
Design Calculation Example IV: Enclosing-Type Exhaust Hood

DESIGN CALCULATION EXAMPLE I: LATERAL EXHAUST HOOD WITH BAFFLES

Given: Free standing chrome plating tank with baffled sides, see Figure 38. Tank dimensions are 6 feet long and 2.5 feet wide. No crossdrafts, replacement air is adequate and well-distributed.

Total Volumetric Flowrate Calculation.

1. Determine the minimum capture velocity, using Table 2. The hazard classification for chromic acid is A-1, according to the ACGIH Manual. Therefore, the minimum capture velocity is 150 fpm.

2. Determine the minimum exhaust rate, using Table 4 for baffled tanks. The tank width-to-length (W/L) ratio is:

$$W/L = (2.5 \text{ feet})/(6.0 \text{ feet}) = 0.42$$

Therefore, the minimum exhaust rate, in cfm per square foot of tank surface area, equals 225.

3. Calculate the minimum required exhaust volume using the following equation:

$$\text{Minimum exhaust volume} = \text{Minimum exhaust rate X Tank surface area} = 225 \text{ cfm/ft}^2 \text{ X } [(6 \text{ feet}) \times (2.5 \text{ feet})] = 3375 \text{ cfm}$$

Slot Size and Plenum Depth Calculation.

Given: The preliminary design slot velocity is 2000 fpm. The slot length (L_S) is 6 inches less than tank length.

1. Determine the slot area. The slot area is the total area of all slots on the hood face.

$$\text{Slot area} = Q/V = 3375 \text{ cfm}/2000 \text{ fpm} = 1.69 \text{ ft}^2 \text{ (estimate)}$$

From the slot area we can calculate the total width of the slots.

$$\text{Slot width} = A/L_S = 1.69 \text{ ft}^2/5.5 \text{ feet} = 0.31 \text{ feet or } 3.7 \text{ inch (estimate)}$$

2. Divide the total width into two slots 1.75 inches wide. This value is chosen to give reasonable dimensions for construction. The slot velocity will also remain above 2000 fpm. The design width is the total width of the two slots or (2)(1.75)

3. Using the design width determine the design slot velocity and the plenum depth.

Design slot area = (slot width)(slot length)
= [(2)(1.75 inch)](5.5 feet)(1 ft/12 inch)
= 1.6 ft^2

Design slot velocity = Q/A
= 3375 cfm/(1.6 ft^2)
= 2104 fpm

Plenum depth = (2)(slot width)
= (2)[(2)(1.75 inch)]
= 7.0 inches

Duct Size and Design Velocity Calculation.

1. Determine the duct size. Estimate the duct area using minimum exhaust volume and transport velocity.

Duct area = Q/V
= 3375 cfm/2500 fpm
= 1.35 ft^2 (estimate)

2. Choose a 15 inch diameter duct. The duct area is 1.227 ft^2. This will give a higher duct velocity than the minimum transport velocity required.

Design duct velocity = Q/A
= 3375 cfm/1.227 ft^2
= 2751 fpm

Hood Static Pressure Calculation. (See Sections 3 and 5, ACGIH Manual)

Hood SP = entry loss + acceleration
= h_e + VP_d

Where: h_e = entry loss slot and entry loss of duct
= h_{es}+ h_{ed}
= 1.78 VP_{slot} + 0.25 VP_{duct}

VP_d = $(V/4005)^2$ at standard temperature and pressure
= $(2751/4005)^2$

Hood SP = 1.78 VP_{slot} + 0.25 VP_{duct} + VP_{duct}
= (1.78)(0.28 inch) + (0.25)(0.47 inch) + (0.47 inch)
= 0.50 + 0.12 + 0.47
= 1.09 in. wg at (STP)

DESIGN CALCULATION EXAMPLE II: PULL-PULL EXHAUST HOOD WITHOUT BAFFLES

Given: Chrome plating tank (8 feet x 3 feet).
Free standing in center of room, no baffles.
No crossdrafts, adequate and well-distributed replacement air.

Total Volumetric Flowrate Calculation.

1. Determine the minimum capture velocity, using Table 2. The hazard classification for chromic acid is A-1, according to the ACGIH Manual. Therefore, the minimum capture velocity is 150 fpm.

2. Determine the minimum exhaust rate, using Table 3 for tanks without baffles. Since it is a pull-pull hood, the effective area for each hood is half the tank width. The tank width-to-length (W/L) ratio becomes:

$$(W/2)/L = (3/2)/8$$
$$= 0.1875$$

Therefore, the minimum volume rate, in cfm per square foot of tank surface area, equals 250.

3. Calculate the minimum required exhaust volume using the following equation:

$$\text{Minimum exhaust volume} = \text{Minimum exhaust rate X Tank surface area}$$
$$= 250\ \text{cfm/ft}^2 \text{ X } [(8 \text{ feet}) \times (3 \text{ feet})]$$
$$= 6000 \text{ cfm}$$

Slot Size Calculation.

1. Size slots for a slot velocity of 2000 fpm. Determine the slot area. The slot area is the total area of all slots on the hood face.

$$\text{Slot area} = Q/V$$
$$= 6000 \text{ cfm}/2000 \text{ fpm}$$
$$= 3 \text{ ft}^2 \text{ (estimate)}$$

From the slot area we can calculate the total width of the slots. The slot length should cover the entire length of the tank.

$$\text{Slot width} = A/L_s$$
$$= 3 \text{ ft}^2/8 \text{ feet}$$
$$= 0.375 \text{ feet or } 4.5 \text{ inch (estimate)}$$

2. Divide the total width into two slots 2.25 inches wide. Ensure that the value chosen gives a reasonable dimensions for construction and the slot velocity remains above 2000 fpm.

Duct Size and Design Velocity Calculation.

1. Determine the duct size. Estimate the duct area using minimum exhaust volume and transport velocity.

$$\begin{aligned} \text{Duct area} &= Q/V \\ &= 6000 \text{ cfm}/2500 \text{ fpm} \\ &= 2.4 \text{ ft}^2 \text{ (estimate)} \end{aligned}$$

2. Choose a 20 inch diameter duct. The duct area is 2.182 ft^2. This will give a higher duct velocity than the minimum transport velocity required.

$$\begin{aligned} \text{Design duct velocity} &= Q/A \\ &= 6000 \text{ cfm}/2.182 \text{ ft}^2 \\ &= 2750 \text{ fpm} \end{aligned}$$

DESIGN CALCULATION EXAMPLE III: PULL-PULL EXHAUST HOOD WITH BAFFLES

Given: Chrome plating tank (8 feet x 3 feet).
Free standing in center of room, with baffles.
No crossdrafts, adequate and well-distributed replacement air.

Total Volumetric Flowrate Calculation.

1. Determine the minimum capture velocity, using Table 2. The hazard classification for chromic acid is A-1, according to the ACGIH Manual. Therefore, the minimum capture velocity is 150 fpm.

2. Determine the minimum exhaust rate, using Table 4 for tanks with baffles. Baffles on a pull-pull tank are a minimum of 12 inches high, with the rear baffle as tall as half the tank width.

Since it is a pull-pull hood, the effective area for each hood is half the tank width. The tank width-to-length (W/L) ratio becomes:

$$(W/2)/L = (3/2)/8$$
$$= 0.1875$$

Therefore, the minimum volume rate, in cfm per square foot of tank surface area, equals 190.

3. Calculate the minimum required exhaust volume using the following equation:

$$\text{Minimum exhaust volume} = \text{Minimum exhaust rate X Tank surface area}$$
$$= 190\ \text{cfm/ft}^2 \text{ X } [(8 \text{ feet}) \text{ x } (3 \text{ feet})]$$
$$= 4560 \text{ cfm}$$

Slot Size Calculation.

1. Size slots for a slot velocity of 2000 fpm. Determine the slot area. The slot area is the total area of all slots on the hood face.

$$\text{Slot area} = Q/V$$
$$= 4560 \text{ cfm}/2000 \text{ fpm}$$
$$= 2.28 \text{ ft}^2 \text{ (estimate)}$$

From the slot area we can calculate the total width of the slots. The slot length should cover the entire length of the tank.

$$\text{Slot width} = A/L_s$$
$$= 2.28 \text{ ft}^2/8 \text{ feet}$$
$$= 0.285 \text{ feet or } 3.42 \text{ inch (estimate)}$$

2. Divide the total width into two slots 1.5 inches wide. Ensure that the value chosen gives a reasonable dimensions for construction and the slot velocity remains above 2000 fpm.

Duct Size and Design Velocity Calculation.

1. Determine the duct size. Estimate the duct area using minimum exhaust volume and transport velocity.

Duct area = Q/V
= 4560 cfm/2500 fpm
= 1.824 ft^2 *(estimate)*

2. Choose a 18 inch diameter duct. The duct area is 1.7671 ft^2. This will give a higher duct velocity than the minimum transport velocity required.

Design duct velocity = Q/A
= 4560 cfm/1.7671 ft^2
= 2580 fpm

DESIGN CALCULATION EXAMPLE IV: ENCLOSING-TYPE EXHAUST HOOD

Given: Chrome plating tank (8 feet x 3-1/2 feet).
Free standing in center of room, two opened sides.
No crossdrafts.
Adequate and well-distributed replacement air.
Figure 43 - outside monorails are more adaptable.

Exhaust Volume Calculation.

1. The hazard classification for chromic acid is A-1. Using Table 5, the minimum capture velocity equals 150 fpm since two sides are open.

2. Determine open area of enclosure.

Area = area of opening + area of monorail slot
= 2 HW + CL

Where: H = Height of rectangular opening = 4 feet
L = Length of monorail slot opening = 8 feet
W = Width of side opening = 3.5 feet
C = Width of monorail slot opening = 1 foot

Area = (2)(4)(3.5) + (1)(8)
= 36 ft^2

3. Determine exhaust volume.

Q = VA
= (150 fpm)(36 ft^2)
= 5400 cfm

Hood Design Calculation.

1. Slot design criteria not applicable for enclosing hoods.

2. Plenum design criteria not applicable for enclosing hoods.

Duct Design Calculation.

1. Duct design is based on the following criteria and calculations:

Duct velocity = 2500 fpm

Duct area = Q/V
= 5400 cfm/2500 fpm
= 2.16 ft^2 (estimate)

The duct diameter is determined as follows:

$$A = Pi(d)^2/4$$

Therefore,

$$d = (4A/Pi)^{.5}$$
$$= [4(2.16)/Pi]^{.5}$$
$$= 19.9 \text{ inch (estimate)}$$

Use a 20 inch duct, whose area equals $A = 2.182\ ft^2$

Design duct velocity = Q/A
= 5400 cfm/2.182 ft^2
= 2475 fpm

Hood Static Pressure Calculations.

Using Sections 3 and 5 of the ACGIH Manual, hood static pressure calculations are based on the following equations:

1. V = 4005 x VP at standard temperature and pressure (STP).

   Where: V = highest velocity in the balanced system
   VP = velocity pressure in inches wg

   $$VP = (V/4005)^2$$
   $$= (2475/4005)^2$$
   $$= 0.38 \text{ inch wg @ STP}$$

2. Hood Static Pressure = entry loss + acceleration

Entry loss factor (assuming 90° included angle hood is square or rectangular using figure 5-15 in the Industrial Ventilation Manual) is 0.25.

Acceleration factor = 1

$$SP\ hood = (.25)(VP_D) + (1.0)(VP_D)$$
$$= (0.25)(0.38 \text{ inch}) + (1)(0.38 \text{ inch})$$
$$= 0.48 \text{ inches wg @ STP}$$

APPENDIX B

CALCULATION FOR LOWER EXPLOSIVE LIMIT FOR GENERIC STYRENE

Given: Styrene at 14.7 psi (1 Atmosphere) 70°F (530°R)
Specific Gravity (SG) = 0.907
Lower Explosive Limit (LEL) = 1.10%
Molecular Weight (MW) = 104 lb/lb-mole

Assumptions: Operating Temperature in the Room is 85°F (545°R)
Operations use 7 gallons of Styrene per hour
Room dimensions: 20 feet long, 10 feet high, and 15 feet wide.
Molar Volume (MV) means 1 pound-mole of any gas or vapor occupies 387 cubic feet at 70°F and 14.7 psi.

Calculations.

1. Adjust volume for temperature difference.

MVop = (MV)(Operating Temperature/Standard Temperature)
= (387 ft^3/lb-mole)(545°R/530°R)
= 398 ft^3/lb-mole

2. Determine Vapor Volume (VV).

VV = (Mvop)[(standard liquid density)(SG)]/MW
= (398 ft^3/lb-mole)(8.34 lb/gal)(0.907)/(104 lb/lb-mole)
= 28.9 ft^3/gal

3. Determine Dilution Volume required per gallon of solvent.

Vol = [4(100-LEL)(VV)]/LEL
= [4(100% -1.1%)(28.9 ft^3/gal)]/1.1%
= 10393 ft^3/gal

4. Determine Dilution Ventilation rate.

Vol dil = (Vol)(Actual gals/hr)(1hr/60 min)
= (10393 ft^3/gal)(7 gal/hr)(1hr/60 min)
= 1213 ft^3/min

5. Compare to ventilation rate required for health aspects. Assume crossdraft ventilation with velocity equaling 100 fpm.

Volume Flow Rate = (Velocity)(Width)(Height)
= (100 ft/min)(10ft)(15 ft)
= 15000 ft^3/min

APPENDIX C

UNIT CONVERSION AND MEC FOR TYPICAL ORGANIC MEDIA

Industrial hygienists test for dust by taking readings at various places in the room. The result is in units of milligrams per cubic meter (mg/m^3). In most cases, the regulations require the ventilation system to control the airborne concentration of -200 mesh combustible dust particles below 25 percent of the Minimum Explosible Concentration (MEC).

To compare the result to a published MEC for the specific dust, convert the unit using the following formula:

$$\frac{\#\ \text{milligrams}}{\text{cubic meter}} \times \frac{1\ \text{gram}}{1000\ \text{mg}} \times \frac{1\ \text{cubic meter}}{35.314\ \text{cubic foot}} \times \frac{1\ \text{ounce}}{28.35\ \text{grams}} = \frac{\#\ \text{oz}}{\text{cubic foot}}$$

Refer to 29 CFR 1910.94 (c)(6)(ii) to calculate the LEL for flammable liquids. The flammable liquid standard also gives more stringent percentages for some flammable liquids. The conversion above is for dust only.

In addition, there are some situations in the construction and maritime industry that require atmospheres to have lower percentages than 25% of the LEL. Refer to the Industrial Hygiene Field Operations Manual, NEHC-TM91-2 for exceptions.

Contact the manufacturer or vendor to determine the LEL for the specific material used in the booth. Table 10 gives values for generic materials.

Table 10
Minimum Explosion Concentrations for Typical Organic Media

Material	MEC (ounce/cubic foot)
Rice hull	0.055
Black Walnut Shells	0.03
Corncob Grit	0.045
Urea Formaldehyde (type II)	0.085
Acrylic, Thermoplastic (type V)	0.079

APPENDIX D

NON-STANDARD AIR CALCULATIONS

Given: 1. Furnace hood face area equals 1 ft^2. Required capture velocity is 200 fpm. Air passing over the room furnace is heated to 250°F.

2. At standard conditions (70°F, 1 atm), the fan static pressure (FSP) is 3.0 inch water gauge (wg) for an identical system exhausting the same volume of air.

Find: 1. The flowrate of standard, room temperature air into the hood.

2. The flowrate, in actual cubic feet per minute (ACFM) of the heated air flowing in the exhaust duct downstream of the hood.

3. The FSP for the hot air system.

Total Volumetric Flowrate Calculation.

$$Q = V \times A$$
$$= 200 \text{ fpm} \times 1 \text{ ft}^2$$
$$= 200 \text{ cfm}$$

Total Volumetric Flowrate Calculation for Heated Air.

1. Find the absolute temperatures.

$$T_1 = 70^\circ F = (70 + 460)^\circ R = 530^\circ R$$

$$T_2 = 250^\circ F = (250 + 460)^\circ R = 710^\circ R$$

2. Convert the flowrate of room air into the flowrate of heated air.

$$Q_2 = Q_1(T_2/T_1)$$
$$= 200 \text{ cfm } (710^\circ R/530^\circ R)$$
$$= 268 \text{ acfm}$$

Fan Static Pressure Calculation for Heated Air.

1. Find the Density Factor of the heated air.

$$DF = T_2/T_1$$
$$= 710^\circ R/530^\circ R$$
$$= 1.34$$

2. Multiply the FSP at standard conditions by the Density Factor.

$$FSP_2 = FSP_1(DF)$$
$$= 3.0 \text{ inch wg } (1.34)$$
$$= 4.02 \text{ inch wg}$$

REFERENCES

NOTE: THE FOLLOWING REFERENCED DOCUMENTS FORM A PART OF THIS HANDBOOK TO THE EXTENT SPECIFIED HEREIN. USERS OF THIS HANDBOOK SHOULD REFER TO THE LATEST REVISION OF CITED DOCUMENTS UNLESS OTHERWISE DIRECTED.

FEDERAL/MILITARY SPECIFICATIONS, STANDARDS, BULLETINS, HANDBOOKS, AND NAVFAC GUIDE SPECIFICATIONS:

Unless otherwise indicated, copies are available from the STANDARDIZATION DOCUMENT ORDER DESK, Building 4D, 700 Robbins Avenue, Philadelphia, PA 19111-5094.

STANDARDS

MIL-STD-282	Filter Units, Protective Clothing, Gas-Mask Components, and Related Products: Performance Test Methods.
MIL-STD-1472C	Human Engineering Design Criteria for Military Systems, Equipment, and Facilities.

HANDBOOKS

MIL-HDBK-1004/6	Lightning (and Cathodic) Protection.
MIL-HDBK-1008A	Fire Protection for Facilities Engineering, Design and Construction.
MIL-HDBK-1028/3	Maintenance Facilities for Ammunition, Explosives, and Toxins.
MIL-HDBK-1190	Facility Planning and Design Guide.

NAVY MANUALS, P-PUBLICATIONS, AND MAINTENANCE OPERATING MANUALS:

Available from Commanding Officer, Naval Publications and Forms Center, (NPFC), 5801 Tabor Avenue, Philadelphia, PA 19120-5099. To order these documents: Government agencies must use the Military Standard Requisitioning and Issue Procedure (MILSTRIP); the private sector must write to NPFC, ATTENTION: Cash Sales, Code 1051, 5801 Tabor Avenue, Philadelphia, PA 19120-5099.

NAVFAC DM-1.03	Architectural Acoustics.
NAVFAC DM-3.03	Heating, Ventilating, Air Conditioning, and Dehumidifying Systems.
NAVFAC DM-3.5	Compressed Air and Vacuum Systems.

NAVFAC DM-3.10	Noise & Vibration Control of Mechanical Equipment.
NAVMED P-5112	Navy Environmental Health Bulletins.
NAVFAC P-970	Protection Planning in the Noise Environment.
NAVSEA OP5, Vol. 1	Ammunition and Explosives Ashore Safety Regulations for Handling, Storing, Production, Renovation, and Shipping.
NAVSEA S6340-AA-MMA-010	Otto Fuel II Safety, Storage, and Handling Instructions.

NAVY DEPARTMENTAL INSTRUCTIONS:

Available from Commanding Officer, Naval Publications and Forms Center, ATTENTION: Code 3015, 5801 Tabor Avenue, Philadelphia, PA 109120-5099.

NAVMEDCOMINST 6270.1	Health Hazards of Otto Fuel II.
OPNAVINST 5100.23C	NAVY Occupational Safety and Health (NAVOSH) Program Manual.

OTHER GOVERNMENT DOCUMENTS AND PUBLICATIONS:

CFR 29-1910	Occupational Safety and Health Standards.
OSHA 3048	Noise Control, A Guide for Workers and Employees.
EPA-560/ OPTS-86-001	A Guide to Respiratory Protection for the Asbestos Abatement Industry.

(Unless otherwise indicated, copies are available from the Superintendent of Documents, U.S. Government Printing Office, Washington, DC 20402.)

NIOSH Pub. No. 75-108	Development of Design Criteria for Exhaust Systems for Open Surface Tanks.
NIOSH Pub. No. 79-117	Industrial Noise Control Manual Revised Edition.
NIOSH Pub. No. 81-114	Proceedings of the Symposium on Occupational Health Hazards Control Technology in the Foundry and Secondary Non-Ferrous Smelting Industries.

NIOSH Pub. No. 85-116	Recommendations for Control of Occupational Safety and Health Hazards in Foundries.

(Unless otherwise indicated, copies are available from National Technical Information Service (NTIS), 5285 Port Royal Road, Springfield, VA 22161.)

NON-GOVERNMENT PUBLICATIONS:

Air Flow Around Buildings, Heating, Piping and Air Conditioning, Vol. 39, John H. Clarke, 1967.

(Unless otherwise indicated, copies are available from Penton Publishing Company, Inc., 1100 Superior Ave., Cleveland, OH 44144.)

Design of Industrial Vacuum Cleaning Systems and High Velocity, Low Volume Dust Control, Revis L. Stephenson and Harold E. Nixon, 1987.

(Unless otherwise indicated, copies are available from Hoffman & Filtration Systems, P.O. Box 548, East Syracuse, NY 13057.)

AIR MOVEMENT AND CONTROL ASSOCIATION, INC. (AMCA)

AMCA 201	Fans and Systems.

(Unless otherwise indicated, copies are available from Air Movement and Control Association, Inc. (AMCA), 30 West University Drive, Arlington Heights, IL 60004.)

AMERICAN CONFERENCE OF GOVERNMENTAL INDUSTRIAL HYGIENISTS (ACGIH)

ACGIH Manual	Industrial Ventilation, A Manual of Recommended Practice (21st Edition, 1992).

(Unless otherwise indicated, copies are available from American Conference of Governmental Industrial Hygienists (ACGIH), Bldg. D-7, 6500 Glenway, Cincinnati, OH 45211-4438.)

AMERICAN NATIONAL STANDARDS INSTITUTE (ANSI)

ANSI Z9.1	Practices for Ventilation and Operation of Open-Surface Tanks.
ANSI Z9.2	Fundamentals Governing the Design and Operation of Local Exhaust Systems.
ANSI Z9.4	Ventilation and Safe Practice of Abrasive Blasting Operations.
ANSI Z21.47	Gas Fired Central Furnaces (Except Direct Vent Central Furnaces).

ANSI Z88.2	Practices for Respiratory Protection.
ANSI Z358.1	Emergency Eyewash and Shower Equipment.
ANSI 01.1	Safety Requirements for Woodworking Machinery.

(Unless otherwise indicated, copies are available from American National Standards Institute (ANSI), 11 West 42nd Street, New York, NY 10036.)

AMERICAN SOCIETY OF HEATING, REFRIGERATING, AND AIR CONDITIONING ENGINEERS, INC. (ASHRAE)

ASHRAE Handbook	Fundamentals.
ASHRAE Handbook	Equipment.
ASHRAE 52	Air Cleaning Devices Used in General Ventilation for Removing Particulate Matter.

(Unless otherwise indicated, copies are available from American Society of Heating, Refrigerating, and Air Conditioning Engineers, Inc. (ASHRAE), 1791 Tullie Circle NE., Atlanta, GA 30329.)

NATIONAL FIRE PROTECTION ASSOCIATION. INC. (NFPA)

NFPA 33	Standard for Spray Applications Using Flammable and Combustible Materials.
NFPA 34	Standard for Dipping and Coating Processes Using Flammable or Combustible Liquids.
NFPA 65	Standard for the Processing and Finishing of Aluminum.
NFPA 69	Standard on Explosion Prevention Systems.
NFPA 68	Guide for Venting of Deflagration.
NFPA 91	Standard for the Installation of Blower and Exhaust Systems for Dust, Stack, and Vapor Removal or Conveying.
NFPA 654	Standard for the Prevention of Fire and Dust Explosions in the Chemical, Dye, Pharmaceutical, and Plastics Industries.

NFPA 664	Standard for the Prevention of Fires and Explosions in Wood Processing and Woodworking Facilities.

(Unless otherwise indicated, copies are available from National Fire Protection Association. Inc. (NFPA), Batterymarch Park, Quincy, MA 02269.)

SHEET METAL AND AIR CONDITIONING CONTRACTORS NATIONAL ASSOCIATION. INC. (SMACNA)

SMACNA	Accepted Industry Practice for Industrial Duct Construction.
SMACNA	Thermoplastic Duct Construction.
SMACNA	Guide for Steel Stack Design and Construction.
SMACNA	Rectangular Industrial Duct Construction Standards.
SMACNA	Round Industrial Duct Construction Standards.

(Unless otherwise indicated, copies are available from Sheet Metal and Air Conditioning Contractors National Association. Inc. (SMACNA), 4201 Lafayette Center Drive, Chantilly, VA 22021.)

UNDERWRITERS LABORATORY (UL)

UL 1096	Electric Central Air Heating Equipment

(Unless otherwise indicated, copies are available from Underwriters Laboratory (UL), 333 Pfingsten Rd., Northbrook, IL 60062.)

CUSTODIAN:
NAVY - YD2

PREPARING ACTIVITY
NAVY - YD2

PROJECT NO.
FACR-0360

STANDARDIZATION DOCUMENT IMPROVEMENT PROPOSAL

INSTRUCTIONS

1. The preparing activity must complete blocks 1, 2, 3, and 8. In block 1, both the document number and revision letter should be given.
2. The submitter of this form must complete blocks 4, 5, 6, and 7.
3. The preparing activity must provide a reply within 30 days from receipt of the form.

NOTE: This form may not be used to request copies of documents, nor to request waivers, or clarification of requirements on current contracts. Comments submitted on this form do not constitute or imply authorization to waive any portion of the referenced document(s) or to amend contractual requirements.

I RECOMMEND A CHANGE:	1. DOCUMENT NUMBER	2. DOCUMENT DATE (YYMMDD)
	MIL-HDBK-1003/17B	931215

3. DOCUMENT TITLE
INDUSTRIAL VENTILATION SYSTEMS

4. NATURE OF CHANGE *(Identify paragraph number and include proposed rewrite, if possible. Attach extra sheets as needed.)*

5. REASON FOR RECOMMENDATION

6. SUBMITTER

a. NAME (Last, First, Middle Initial)	b. ORGANIZATION	
c. ADDRESS (Include Zip Code)	d. TELEPHONE (Include Area Code) (1) Commercial (2) AUTOVON (If applicable)	7. DATE SUBMITTED (YYMMDD)

8. PREPARING ACTIVITY

a. NAME	b. TELEPHONE (Include Area Code) (1) Commercial	(2) AUTOVON
COMMANDING OFFICER NAVAL FACILITIES ENGINEERING SERVICE CENTER	(805)982-4886	551-4886
c. ADDRESS (Include Zip Code) ATTN CODE 431 560 CENTER DRIVE PORT HUENEME CA 93043-4328	IF YOU DO NOT RECEIVE A REPLY WITHIN 45 DAYS, CONTACT: Defense Quality and Standardization Office 5203 Leesburg Pike, Suite 1403, Falls Church, VA 22041-3466 Telephone (703) 756-2340 AUTOVON 289-2340	