UFC 3-190-07N
16 January 2004

UNIFIED FACILITIES CRITERIA (UFC)

OPERATION AND MAINTENANCE: FOOD SERVICE EQUIPMENT

APPROVED FOR PUBLIC RELEASE; DISTRIBUTION UNLIMITED

UNIFIED FACILITIES CRITERIA (UFC)

O&M: FOOD SERVICE EQUIPMENT

Any copyrighted material included in this UFC is identified at its point of use.
Use of the copyrighted material apart from this UFC must have the permission of the copyright holder.

U.S. ARMY CORPS OF ENGINEERS

NAVAL FACILITIES ENGINEERING COMMAND (Preparing Activity)

AIR FORCE CIVIL ENGINEERING SUPPORT AGENCY

Record of Changes (changes indicated by **1**\ ... /**1**/)

Change No.	Date	Location

FOREWORD

The Unified Facilities Criteria (UFC) system is prescribed by MIL-STD 3007 and provides planning, design, construction, sustainment, restoration, and modernization criteria, and applies to the Military Departments, the Defense Agencies, and the DoD Field Activities in accordance with USD(AT&L) Memorandum dated 29 May 2002. UFC will be used for all DoD projects and work for other customers where appropriate.

UFC are living documents and will be periodically reviewed, updated, and made available to users as part of the Services' responsibility for providing technical criteria for military construction. Headquarters, U.S. Army Corps of Engineers (HQUSACE), Naval Facilities Engineering Command (NAVFAC), and Air Force Civil Engineer Support Agency (AFCESA) are responsible for administration of the UFC system. Defense agencies should contact the preparing service for document interpretation and improvements. Technical content of UFC is the responsibility of the cognizant DoD working group. Recommended changes with supporting rationale should be sent to the respective service proponent office by the following electronic form: Criteria Change Request (CCR). The form is also accessible from the Internet sites listed below.

UFC are effective upon issuance and are distributed only in electronic media from the following sources:

- Unified Facilities Criteria (UFC) Index http://65.204.17.188//report/doc_ufc.html.
- USACE TECHINFO Internet site http://www.hnd.usace.army.mil/techinfo/index.htm.
- NAVFAC Engineering Innovation and Criteria Office Internet site http://criteria.navfac.navy.mil.
- Construction Criteria Base (CCB) system maintained by the National Institute of Building Sciences at Internet site http://www.nibs.org/ccb.

Hard copies of UFC printed from electronic media should be checked against the current electronic version prior to use to ensure that they are current.

AUTHORIZED BY:

DONALD L. BASHAM, P.E.
Chief, Engineering and Construction Division
U.S. Army Corps of Engineers

DR. JAMES W WRIGHT, P.E.
Chief Engineer
Naval Facilities Engineering Command

KATHLEEN I. FERGUSON, P.E.
The Deputy Civil Engineer
DCS/Installations & Logistics
Department of the Air Force

Dr. GET W. MOY, P.E.
Director, Installations Requirements and Management
Office of the Deputy Under Secretary of Defense (Installations and Environment)

CONTENTS

Page

CHAPTER 1 INTRODUCTION

Paragraph 1-1 PURPOSE AND SCOPE 1-1
1-2 APPLICABILITY 1-1
1-2.1 General Building Requirements 1-1
1-2.2 Safety 1-1
1-2.3 Fire Protection 1-1
1-2.4 Antiterrorism/Force Protection 1-1
1-3 REFERENCES 1-1

APPENDIX A MIL-HDBK 1119……...……..... A-1

CHAPTER 1

INTRODUCTION

1-1 **PURPOSE AND SCOPE**. This UFC is comprised of two sections. Chapter 1 introduces this UFC and provides a listing of references to other Tri-Service documents closely related to the subject. Appendix A contains the full text copy of the previously released Military Handbook (MIL-HDBK) on this subject. This UFC serves as criteria until such time as the full text UFC is developed from the MIL-HDBK and other sources.

This UFC provides general criteria for repairs and utility service to food service equipment.

Note that this document does not constitute a detailed technical design, and is issued as a general guide to the considerations associated with repairs and utility service to food service equipment.

1-2 **APPLICABILITY**. This UFC applies to all Navy service elements and Navy contractors; Army service elements should use the references cited in paragraph 1-3 below; all other DoD agencies may use either document unless explicitly directed otherwise.

1-2.1 **GENERAL BUILDING REQUIREMENTS**. All DoD facilities must comply with UFC 1-200-01, *Design: General Building Requirements*. If any conflict occurs between this UFC and UFC 1-200-01, the requirements of UFC 1-200-01 take precedence.

1-2.2 **SAFETY**. All DoD facilities must comply with DODINST 6055.1 and applicable Occupational Safety and Health Administration (OSHA) safety and health standards.

NOTE: All **NAVY** projects, must comply with OPNAVINST 5100.23 (series), *Navy Occupational Safety and Health Program Manual*. The most recent publication in this series can be accessed at the NAVFAC Safety web site: www.navfac.navy.mil/safety/pub.htm. If any conflict occurs between this UFC and OPNAVINST 5100.23, the requirements of OPNAVINST 5100.23 take precedence.

1-2.3 **FIRE PROTECTION**. All DoD facilities must comply with UFC 3-600-01, *Design: Fire Protection Engineering for Facilities*. If any conflict occurs between this UFC and UFC 3-600-01, the requirements of UFC 3-600-01 take precedence.

1-2.4 **ANTITERRORISM/FORCE PROTECTION**. All DoD facilities must comply with UFC 4-010-01, *Design: DoD Minimum Antiterrorism Standards for Buildings*. If any conflict occurs between this UFC and UFC 4-010-01, the requirements of UFC 4-010-01 take precedence.

1-3 **REFERENCES**. The following Tri-Service publications have valuable information on the subject of this UFC. When the full text UFC is developed for this

subject, applicable portions of these documents will be incorporated into the text. The designer is encouraged to access and review these documents as well as the references cited in Appendix A.

1. US Army Corps of Engineers
   Commander
   USACE Publication Depot
   ATTN: CEIM-IM-PD
   2803 52nd Avenue
   Hyattsville, MD 20781-1102
   (301) 394-0081 fax: 0084
   karl.abt@hq02.usace.army.mil
   http://www.usace.army.mil/inet/usace-docs/

   USACE TM 5-636, Kitchen Equipment: Repairs and Utilities, 10 July 1946
   USACE TM 5-640, Ranges, Bake Ovens and Burners for Mess Equipment: Repairs and Utilities, 04 July 1946

APPENDIX A

MIL-HDBK 1119
FOOD SERVICE EQUIPMENT

INCH-POUND

MIL-HDBK-1119
30 AUGUST 1991
SUPERSEDING
NAVDOCKS MO-119
SEPTEMBER 1963

MILITARY HANDBOOK

FOOD SERVICE EQUIPMENT

AMSC N/A

AREA FACR

DISTRIBUTION STATEMENT A. APPROVED FOR PUBLIC RELEASE: DISTRIBUTION IS UNLIMITED

ABSTRACT

This handbook provides information about repair and maintenance of Food Service Equipment at Navy shore facilities. This handbook is not intended to replace specific manufacturer's guidance, e.g., inspecting, testing, lubricating, adjusting, calibrating for specific equipment models; rather, it provides a common base for developing a comprehensive activity maintenance program.

FOREWORD

This handbook establishes basic standards and procedures for maintaining and repairing Food Service Equipment at Navy shore facilities.

Recommendations for improvement are encouraged from within the Navy, other Government agencies, and the private sector and should be furnished on the DD Form 1426 provided inside the back cover to Commander, Northern Division, Naval Facilities Engineering Command, Code 164, Philadelphia, PA 19112-5094; telephone commercial (215) 897-6688.

THIS HANDBOOK SHALL NOT BE USED AS A REFERENCE DOCUMENT FOR PROCUREMENT OF EQUIPMENT. IT IS TO BE USED AS A GUIDE TO ESTABLISH MAINTENANCE PROCEDURES IN FOOD SERVICE FACILITIES. DO NOT REFERENCE IT IN MILITARY OR FEDERAL SPECIFICATIONS OR OTHER PROCUREMENT DOCUMENTS.

FOOD SERVICE EQUIPMENT

CONTENTS

		Page
Section 1	MAINTENANCE AND INSPECTION	
1.1	Purpose and Scope	1
1.1.2	Cancellation	1
1.2	Responsibility	1
1.2.1	Naval Supply Systems Command (NAVSUP)	1
1.2.2	Commanding Officer	1
1.2.3	Operator Personnel	1
1.2.4	Maintenance Personnel	1
1.3	Inspection and Maintenance	2
1.3.1	Preventive Maintenance	2
1.3.2	Corrective Maintenance	2
1.3.3	Breakdown Maintenance	3
1.4	Records and Reports	3
1.4.1	Current Maintenance Records	3
1.4.2	Historical Records	4
1.5	Related Publications, Directives, and Programs	4
Section 2	HEALTH, SAFETY, AND ENVIRONMENTAL ISSUES	
2.1	Objective and Implementation	5
2.1.1	Prohibited Materials	6
2.1.2	Recommended Practices	6
2.2	Major Safety Concerns	7
2.3	Environmental Concerns	8
Section 3	FOOD PREPARATION AND NON-HEATING ELECTRICAL APPLIANCES	
3.1	Scope and Maintenance	9
3.2	Safety Procedures	9
3.3	Dough Roller	9
3.3.1	General Description	9
3.3.2	Major Dough Roller Components	9
3.3.3	General Operation	9
3.3.4	Operation Hints for Dough Rollers	10
3.3.5	Maintenance for Dough Rollers	10
3.3.6	Troubleshooting for Dough Rollers	11
3.4	Mixers	12
3.4.1	General Description	12
3.4.2	Major Mixer Components	12
3.4.3	General Operation	12
3.4.4	Operation Hints for Mixers	12
3.4.5	Maintenance for Mixers	13
3.4.6	Troubleshooting for Mixers	15
3.5	Vertical Cutter Mixers	16

		Page
3.5.1	General Description	16
3.5.2	Major Vertical Cutter Mixer Components	16
3.5.3	General Operation	16
3.5.4	Operation Hints for Vertical Cutter Mixers	16
3.5.5	Maintenance for Vertical Cutter Mixers	16
3.5.6	Troubleshooting for Vertical Cutter Mixers	17
3.6	Peelers	18
3.6.1	General Description	18
3.6.2	Major Peeler Components	18
3.6.3	General Operation	18
3.6.4	Operation Hints for Peelers	19
3.6.5	Maintenance for Peelers	19
3.6.6	Troubleshooting for Peelers	19
3.7	Slicers	20
3.7.1	General Description	20
3.7.2	Major Slicer Components.	20
3.7.3	General Operation	21
3.7.4	Operation Hints for Slicers	21
3.7.5	Maintenance for Slicers	21
3.7.6	Troubleshooting for Slicers	21
Section 4	DRINK DISPENSERS AND ASSOCIATED EQUIPMENT	
4.1	Scope and Maintenance	23
4.2	CO2 Cylinder Safety	23
4.3	Ice Makers	24
4.3.1	General Description	24
4.3.2	Major Ice-Maker Components	24
4.3.3	General Operation	24
4.3.4	Operation Hints for Ice Makers	24
4.3.5	Maintenance for Ice Maker	24
4.3.6	Troubleshooting for Ice Makers	25
4.4	Ice Dispensers	26
4.4.1	General Description	26
4.4.2	Major Ice Dispenser Components	26
4.4.3	General Operation	26
4.4.4	Operation Hints for Ice Dispensers	26
4.4.5	Maintenance for Ice Dispensers	26
4.4.6	Troubleshooting for Ice Dispensers	27
4.5	Coffee Makers/Urns	27
4.5.1	General Description	27
4.5.2	Major Coffee Maker and Urn Components	28
4.5.3	General Operation	28
4.5.4	Operation Hints for Coffee Makers/Urns	28
4.5.5	Maintenance for Coffee Makers/Urns	30
4.5.6	Troubleshooting for Coffee Makers/Urns	30
4.6	Carbonated Beverage Systems	31

Page

4.6.1 General Description 31
4.6.2 Major Carbonated Beverage System Components 32
4.6.3 General Operation 32
4.6.4 Operation Hints 32
4.6.5 Maintenance for Carbonated Beverage Systems 32
4.6.6 Troubleshooting for Carbonated Beverage Systems . . . 33
4.7 Juice Dispensers 34
4.7.1 General Description 34
4.7.2 Major Juice Dispenser Components 35
4.7.3 General Operation 35
4.7.4 Operation Hints for Juice Dispensers 35
4.7.5 Maintenance for Juice Dispensers 35
4.7.6 Troubleshooting for Juice Dispensers 35
4.8 Milk Dispenser 36
4.8.1 General Description 36
4.8.2 Major Milk Dispenser Components 36
4.8.3 General Operation 36
4.8.4 Operation Hints 36
4.8.5 Maintenance for Milk Dispenser 36
4.8.6 Troubleshooting 36
4.9 Hot Beverage Dispenser 37
4.9.1 General Description 37
4.9.2 Major Hot Beverage Dispenser Components 37
4.9.3 General Operation 37
4.9.4 Operation Hints 37
4.9.5 Maintenance for Hot Beverage Dispensers 38
4.9.6 Troubleshooting for Hot Beverage Dispensers 38

Section 5 COOKING EQUIPMENT
5.1 Scope 40
5.2 Gas Appliances 40
5.3 Gas Appliance Safety 41
5.4 Major Gas Appliance Components 41
5.4.1 Maintenance for Gas Appliances 41
5.4.2 Troubleshooting for Major Gas Appliance Components . 42
5.5 Ovens 43
5.5.1 General Description 43
5.5.2 Major Oven Components 43
5.5.3 General Operation 44
5.5.4 Operation Hints 45
5.5.5 Troubleshooting for Ovens 46
5.6 Microwave Ovens 47
5.6.1 General Description 47
5.6.2 Major Microwave Oven Components 47
5.6.3 General Operation 47
5.6.4 Operation Hints 48

Page

5.6.5	Maintenance for Microwave Ovens	48
5.6.6	Troubleshooting for Microwave Ovens	49
5.7	Steamers	49
5.7.1	General Description	49
5.7.2	Major Steamer Components	49
5.7.3	General Operation	49
5.7.4	Operation Hints	49
5.7.5	Maintenance for Steamers	50
5.7.6	Troubleshooting for Steamers	51
5.8	Broilers	53
5.8.1	General Description	53
5.8.2	Major Broiler Components	53
5.8.3	General Operation for Broilers	53
5.8.4	Operation Hints for Broilers	53
5.8.5	Maintenance for Broilers	55
5.8.6	Troubleshooting for Boilers	55
5.9	Griddles	56
5.9.1	General Description	56
5.9.2	Major Griddle Components	56
5.9.3	General Operation for Griddles	56
5.9.4	Operation Hints for Griddles	57
5.9.5	Maintenance for Griddles	57
5.9.6	Troubleshooting for Griddles	57
5.10	Fryers	58
5.10.1	Description	58
5.10.2	Major Fryer Components	58
5.10.3	General Operation for Fryers	58
5.10.4	Operation Hints for Fryers	59
5.10.5	Maintenance for Fryers	60
5.10.6	Troubleshooting for Fryers	61
5.11	Steam-Jacketed Kettles	63
5.11.1	General Description	63
5.11.2	Major Kettle Components	63
5.11.3	General Operation for Kettles	63
5.11.4	Operation Hints for Kettles	64
5.11.5	Maintenance for Kettles	64
5.11.6	Troubleshooting for Steam-Jacketed Kettles	64
5.12	Tilting Skillet	66
5.12.1	General Description	66
5.12.2	Major Tilting Skillet Components	66
5.12.3	General Operation	66
5.12.4	Operation Hints	67
5.12.5	Maintenance	67
5.12.6	Troubleshooting for Tilting Skillet	67
5.13	Ranges	68
5.13.1	General Description	68

5.13.2	Major Range Components	68
5.13.3	General Operation	68
5.13.4	Operation Hints	68
5.13.5	Maintenance	68
5.13.6	Troubleshooting for Ranges	70
5.14	Toasters	70
5.14.1	General Description	70
5.14.2	Major Toaster Components	70
5.14.3	General Operation for Toasters	70
5.14.4	Operation Hints for Toasters	71
5.14.5	Maintenance for Toasters	71
5.14.6	Troubleshooting for Toaster	71
5.15	Dough Proofers	72
5.15.1	General Description	72
5.15.2	Major Dough Proofer Components	73
5.15.3	General Operation for Proofing Dough	73
5.15.4	Operation Hints for Dough Proofers	73
5.15.5	Maintenance for Dough Proofers	73
5.15.6	Troubleshooting for Dough Proofers	74
Section 6	WASHING/CLEAN-UP	
6.1	Scope and Maintenance	75
6.2	Safety	75
6.3	Dishwashers	75
6.3.1	General Description	75
6.3.2	Major Dishwasher Components	75
6.3.3	General Operation for Dishwasher	75
6.3.4	Operation Hints for Dishwasher	76
6.3.5	Maintenance for Dishwasher	77
6.3.6	Dishwasher Troubleshooting	77
6.4	Waste Disposals	80
6.4.1	General Description	80
6.4.2	Major Disposal Components	81
6.4.3	General Operation for Waste Disposals	81
6.4.4	Operation Hints for Waste Disposals	81
6.4.5	Maintenance for Waste Disposals	81
6.4.6	Waste Disposal Troubleshooting	81
6.5	Conveyors	83
6.5.1	General Description	83
6.5.2	Major Conveyor Components	83
6.5.3	General Operation	83
6.5.4	Operation Hints for Conveyors	84
6.5.5	Maintenance for Conveyors	85
6.5.6	Troubleshooting for Conveyors	85
6.6	Grease Traps	87
6.6.1	General Description	87
6.6.2	General Operation	87
6.6.3	Maintenance	87

		Page
Section 7	REFRIGERATION AND FREEZER UNITS	
7.1	Scope and Maintenance	89
7.2	Refrigerators	89
7.2.1	General Description	89
7.2.2	Major Refrigerator Components	90
7.2.3	General Operation	90
7.2.4	Operation Hints for Refrigerators	90
7.2.5	Maintenance for Refrigerators	90
7.2.6	Troubleshooting for Refrigerators	90
Section 8	MISCELLANEOUS EQUIPMENT	
8.1	Scope and Maintenance	97
8.2	Steam Tables	97
8.2.1	General Description for Steam Tables	97
8.2.2	Major Steam Table Components	97
8.2.3	General Operation for Steam Tables	97
8.2.4	Operation Hints for Steam Tables	97
8.2.5	Maintenance for Steam Tables	97
8.2.6	Troubleshooting for Steam Tables	98
8.3	Fat Filters	98
8.3.1	General Description	98
8.3.2	Major Fat Filter Components	98
8.3.3	General Operation for Fat Filters	99
8.3.4	Operation Hints for Fat Filters	99
8.3.5	Maintenance for Fat Filters	100
8.3.6	Troubleshooting for Fat Filters	100
8.4	Soft Ice Cream Machines	100
8.4.1	General Description for Soft Ice Cream Machines	100
8.4.2	Major Soft Ice Cream Machine Components	101
8.4.3	General Operation for Soft Ice Cream Machines	101
8.4.4	Operation Hints for Soft Ice Cream Machines	101
8.4.5	Maintenance for Soft Ice Cream Machines	101
8.4.6	Troubleshooting for Soft Ice Cream Machines	102
8.5	Ventilation	103
8.5.1	General Description for Ventilation	103
8.5.2	Major Ventilation System Components	103
8.5.3	General Operation for Ventilation Systems	104
8.5.4	Operation Hints for Ventilation Systems	105
8.5.5	Maintenance for Ventilation Systems	105
8.5.6	Troubleshooting for Ventilation Systems	105
8.6	Fire Suppression Devices	107
8.6.1	General Description for Fire Suppression Devices	107
8.7	Electric Motors	107
8.7.1	Definitions and General Descriptions	107
8.7.2	Major Motor Components	108
8.7.3	General Operation for Major Motor Components	108

Page

8.7.4 Operation Hints for Major Motor Components 108
8.7.4.1 Alignment 108
8.7.4.2 Overheating 108
8.7.4.3 Moisture Control 109
8.7.4.4 Improper Lubrication 109
8.7.4.5 Voltage Imbalance in Three-Phase Supply Systems . . 109
8.7.4.6 Low Voltage 109
8.7.4.7 High Voltage 110
8.7.4.8 Short Cycling 110
8.7.4.9 Loose Connections 110
8.7.5 Maintenance for Electrical Motors 110
8.7.6 Troubleshooting for Electrical Motors 110
8.7.6.1 Induction Motors 110
8.7.6.2 DC Motors 113

APPENDIX

APPENDIX A NAVY FOOD SERVICE EQUIPMENT SUPPLIERS AND DISTRIBUTORS 115

FIGURES

Figure 1 Temperatures Necessary for the Proper Sanitizing of Food-Service Equipment and Utensils 5
2 Major Dough Roller Components 10
3 Major Mixer Components 13
4 Major Peeler Components 18
5 Major Slicer Components 20
6 Major Coffee Maker Components 29
7 Major Urn Components 30
8 Gas Flames 40
9 Conveyor Oven 44
10 Major Broiler Components 54
11 Major Griddle Components 57
12 Major Fryer Components 59
13 Major Range Components 69
14 Major Toaster Components 71
15 Major Conveyor Components 84
16 Typical Grease Traps 88
17 Major Fat Filter Components 99
18 Major Ventilation System Components 104

TABLES

		Page
Table 1	Recommended Operator and Maintenance Personnel Procedures for Dough Rollers	11
2	Recommended Operator and Maintenance Personnel Procedures for Mixers	14
3	Recommended Operator and Maintenance Personnel Procedures for Vertical Cutter Mixers	17
4	Recommended Operator and Maintenance Personnel Procedures for Peelers	19
5	Recommended Operator and Maintenance Personnel Procedures for Slicers	22
6	Recommended Operator and Maintenance Personnel Procedures for Ice Makers	25
7	Recommended Operator and Maintenance Personnel Procedures for Ice Dispensers	27
8	Recommended Operator and Maintenance Personnel Procedures for Coffee Makers/Urns	31
9	Recommended Operator and Maintenance Personnel Procedures for Carbonated Beverage System	33
10	Recommended Operator and Maintenance Personnel Procedures for Juice Dispensers	35
11	Recommended Operator and Maintenance Personnel Procedures for Milk Dispensers	37
12	Recommended Operator and Maintenance Personnel Procedures for Hot Beverage Dispensers	38
13	Recommended Operator and Maintenance Personnel Procedures for Gas Appliances	42
14	Recommended Operator and Maintenance Personnel Procedures for Microwave Ovens	48
15	Recommended Operator and Maintenance Personnel Procedures for Steamers	51
16	Recommended Operator and Maintenance Personnel Procedures for Broilers	55
17	Recommended Operator and Maintenance Personnel Procedures for Griddles	58
18	Recommended Operator and Maintenance Personnel Procedures for Fryers	61
19	Major Kettle Components	64
20	Recommended Operator and Maintenance Personnel Procedures for Kettles	65
21	Recommended Operator and Maintenance Personnel Procedures for Skillets	67
22	Recommended Operator and Maintenance Personnel Procedures for Ranges	69

Page

23 Recommended Operator and Maintenance Personnel Procedures for Toasters 72
24 Recommended Operator and Maintenance Personnel Procedures for Dough Proofers 74
25 Recommended Operator and Maintenance Personnel Procedures for Dishwashers 78
26 Recommended Operator and Maintenance Personnel Procedures for Waste Disposals 82
27 Recommended Operator and Maintenance Personnel Procedures for Conveyors 86
28 Recommended Operator and Maintenance Personnel Procedures for Refrigerators 91
29 Recommended Operator and Maintenance Personnel Procedures for Steam Tables 98
30 Recommended Operator and Maintenance Personnel Procedures for Fat Filters 100
31 Recommended Operator and Maintenance Personnel Procedures for Soft Ice Cream Machines 102
32 Recommended Operator and Maintenance Personnel Procedures for Ventilation Systems 105
33 Recommended Operator and Maintenance Personnel Procedures for Electrical Motors 111

REFERENCES 130

Section 1: MAINTENANCE AND INSPECTION

1.1 Purpose and Scope. This handbook provides guidance for personnel involved in the operation and maintenance of food service equipment for the Naval Shore Establishment. It provides information about the various types of mechanical and electrical food service equipment. Together with detailed manufacturers' literature, this handbook provides a foundation for developing a comprehensive maintenance program for managers and field personnel. This handbook is not intended to replace specific manufacturer's guidance (e.g., inspecting, testing, lubricating, adjusting, calibrating) for specific equipment models; rather, it provides a common base for developing a comprehensive activity maintenance program. A list of commercial/food service vendors appears in Appendix A.

1.1.2 Cancellation. This handbook, MIL-HDBK-1119, dated 30 August 1991, cancels and supersedes NAVDOCKS MO-119 of September, 1963.

1.2 Responsibility

1.2.1 Naval Supply Systems Command (NAVSUP). NAVSUP is responsible for administering the Navy Food Service Program. This responsibility is delegated to the Commanding Officer, Navy Food Service Systems Office, which monitors all policies, programs, and regulations for fleet and shore enlisted galley operations.

Through Navy Food Management Teams, its personnel provide assistance in the proper selection, operation, and training with regard to food service equipment. Additionally, they develop and maintain a list of approved food service equipment vendors.

1.2.2 Commanding Officer. The Commanding Officer at each Navy shore installation delegates responsibility for galley equipment and operations to the public works department or public works center. In addition, Commanding Officers utilize Naval preventive medicine resources to oversee galley sanitation.

1.2.3 Operator Personnel. Personnel involved in equipment maintenance include food service equipment operators (galley management specialists), food service officers, and maintenance service contractors at some locations. They are responsible for properly operating, cleaning, and maintaining the equipment, and for reporting any reduction in equipment capability or problems to maintenance personnel. Operators who are familiar with their equipment can often tell when it is not performing properly. Public works personnel normally do electrical work, mechanical parts replacement, and other tasks that exceed the skill level of the galley staff.

1.2.4 Maintenance Personnel. The public works maintenance staff is often asked to establish a preventive maintenance program. This is done by

conducting routine food service equipment inspections and by performing corrective maintenance as required by manufacturer's recommendations. Further discussion of planned maintenance programs can be found in NAVFAC MO-321, Facilities Management. Engineering performance standards for food service equipment can be found in NAVFAC P-717, Preventative/Recurring Maintenance Handbook.

1.3 Inspection and Maintenance. Inspection refers to the routine cleaning, examination, lubrication, and minor adjustment of equipment by the operators. A site-specific maintenance action plan is essential. The plan must address specific equipment at the activity and personnel who will plan and perform maintenance. Include inspection frequencies, areas to check, and any unique features. It can be automated in a computer, or put on schedule boards or cards. Regardless of the type of action, a well-defined, written inspection and maintenance plan must exist. Consult the reference section for DOD and Navy manuals and directives that will be helpful in developing maintenance action plans, as well as the manufacturers' literature.

Maintenance procedures outlined in the maintenance sections for each appliance will be performed according to the following schedule:

EU = Each use;
D = Daily;
W = Weekly;
M = Monthly;
Q = Quarterly;
SA = Semi-Annually;
Y = Yearly; and
AR = As required based upon use.

Maintenance can be divided into the three categories discussed below.

1.3.1 Preventive Maintenance. This category includes the day-to-day effort required to keep a piece of equipment or system working. It includes lubrication and minor adjustments. The intent is to reduce equipment downtime by anticipating problems and taking action to prevent them. These actions are usually low in cost and have minimal impact on the resources of daily galley operations. They are often performed by operators rather than maintenance personnel, and should be formalized to meet specific maintenance standards and schedules. Although preventive maintenance usually requires little investment of resources, ensure that it is consistent with maintenance needs. Over-maintaining wastes scarce resources.

1.3.2 Corrective Maintenance. Corrective maintenance involves the planned replacement of parts that normally wear out. This category includes efforts that are more involved than preventive maintenance and are nearly always accomplished by maintenance technicians rather than operators.

Depending on the nature of the system and workload of the galley, corrective maintenance may require immediate scheduling, or it may be postponed with no significant impact on operations. Often, many small corrective maintenance efforts are planned at one time to minimize disruption of operations. During inspection or routine operation, the operator must formally document the need for corrective maintenance.

1.3.3 Breakdown Maintenance. Breakdown maintenance is used when there has been an unplanned material condition failure. It is the most costly type to perform because it cannot be routinely planned. Maintenance personnel must react to breakdown situations immediately, interrupting other planned work. Proper spare parts or other materials may not be readily available, making it necessary to substitute less adequate material. Additionally, equipment failure that requires breakdown maintenance may cause a disruption of galley operations. Preventing the need for breakdown maintenance is the goal of the maintenance program. If preventive and corrective maintenance are performed, breakdown maintenance will be minimized however, it can never be eliminated. A preventive/corrective maintenance program designed to avoid all breakdown maintenance would be cost prohibitive.

1.4 Records and Reports. A key element of any good maintenance program is adequate documentation. Manufacturers' literature, used with other maintenance standards, is essential for planning, executing, and providing quality control of maintenance programs. Records and reports must be tailored to the individual galleys and their organizations, equipment, and maintenance responsibilities. As a minimum, require the types of documentation shown in 1.4.1 and 1.4.2.

1.4.1 Current Maintenance Records. Keep records in sufficient detail to document the following information:

a) The identity of each major equipment item.
b) The current maintenance status of each, including incomplete job orders.
c) Completed equipment maintenance, including the description and cost of major repairs or replacements.
d) Manufacturer's literature for specific models of equipment, which may include installation, operations, maintenance, troubleshooting, and parts information.
e) Recommendations for future programmed repairs or replacements, including estimates of funds or manpower requirements.
f) Schedules for future inspections, tests, or maintenance procedures where programmed or otherwise required.

Unplug when not in use.

1.4.2 Historical Records. Historical records are of particular importance in documenting original equipment installation condition and any subsequent modifications. Additionally, historical maintenance records sometimes have considerable value in the identification of performance trends and provide early identification of pending problems.

1.5 Related Publications, Directives, and Programs. Numerous DOD and Navy manuals and directives provide general and specific information that can be helpful to an individual shore activity in developing its specific maintenance action plan.

Section 2: HEALTH, SAFETY, AND ENVIRONMENTAL ISSUES

2.1 Objective and Implementation. This section reviews general health, safety, and environmental issues as they relate to the operation and maintenance of food service equipment. Food service equipment must meet very rigid performance standards and maintenance requirements to ensure food quality. Many of these standards deal with effective bacteria treatment and prevention of food contamination. Maintenance personnel need to be well acquainted with details from the Manual of Naval Preventive Medicine to promote a healthy atmosphere. The single most important consideration in the maintenance of food service equipment is cleaning. Cleaning ensures proper sanitation and prevents a decrease in equipment performance. See Figure 1 below and Appendix A for further guidance and references.

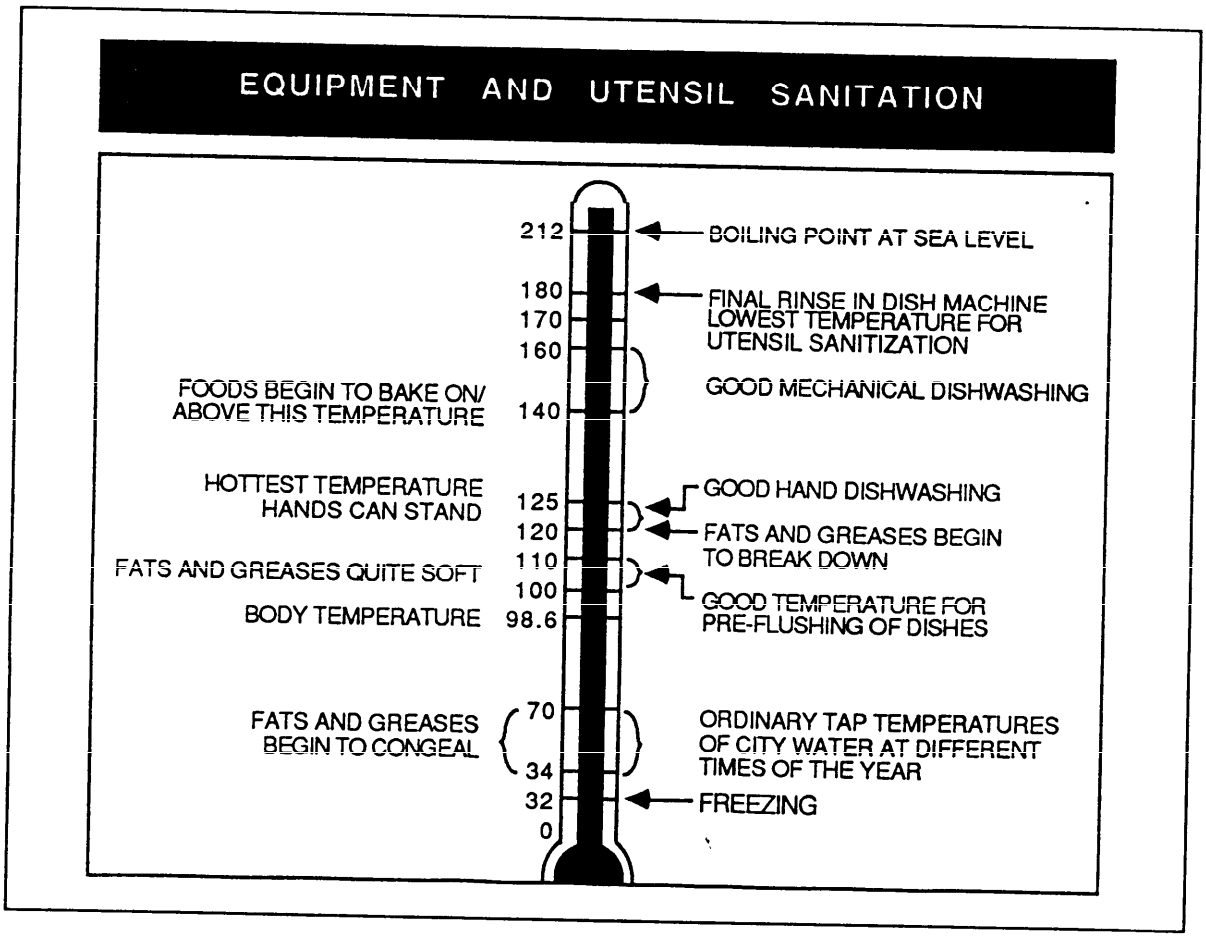

Figure 1
Temperatures Necessary for the Proper Sanitizing of Food-Service Equipment and Utensils

2.1.1 Prohibited Materials

a) The use of metal polishes on food-contact surfaces.
b) The use of steel wool for cleaning equipment and utensils. Metal sponges carried in the supply system may be used but discard them when they show signs of wear.

2.1.2 Recommended Practices

a) Use mineral oil to lubricate parts that come in contact with food, and use the manufacturer's recommended oil in other places.
b) Verify dishwater temperature monthly to assure dishwasher thermometer accuracy. It is essential that proper water temperatures are used to maintain sanitary standards. Maintain a minimum final rinse temperature of 180 degrees F (see Figure 1).
c) Maintain temperature of 40 degrees F or below for refrigeration, or 140 degrees F or above for heating to prevent food spoilage.
d) Scrub steam-jacketed kettles and urns inside and out after each use with a scrub brush and detergent solution followed by a rinse with clean hot water at 170 degrees F. When cleaning is required, disassemble the component parts, including the drain valves and drain line, and ensure that they are cleaned and sanitized after each use in accordance with manufacturer's instructions. If manufacturer's instructions are not available, use NAVSUP Publication 421, Food Service Operations.
e) Dismantle meat and vegetable grinders, peelers, slicers, and chopping machines after each use. Clean all food contact surfaces and sanitize manually or by a mechanical dishwasher. Clean non-food contact surfaces and allow equipment to completely air dry before assembly and re-use.
f) Clean can openers thoroughly with a brush in warm soapy water and sanitize often. Replace the cutting mechanism or repair when the can opener produces metal shavings.
g) Make sure corrosion inhibitors or descaling solutions used on dishwashers or steam cooking equipment are U.S.D.A. approved for food service equipment.
h) Clean ranges, grills, deep fat fryers, toasters, meat saws, and other galley equipment at frequent intervals during the day. Always thoroughly clean the equipment after each use. This includes the inside of ovens, unit covers, drip pans, range grease receptacles, hoods, and other non-food contact surfaces. To prevent fires, wash grease filters inside hoods not less than weekly and change out as necessary. Consult NAVSUP PUB 421 for instructions for proper cleaning and maintenance of galley and meat cutting equipment.

i) Clean inserts for steam tables and salad bars thoroughly after each use, run through the dishwashing machine or another sanitizing process, and store upside down in a clean location for air drying.
j) Give particular care to microwave ovens to prevent emission of dangerous non-ionizing radiation. Post and follow the manufacturer's operating instructions. Include cleaning procedures that emphasize the need to keep door gaskets and opposing surfaces in good physical condition and free from food or grease buildup. Inspect microwave ovens at least quarterly for radiation leakage.
k) Use only materials that meet National Sanitation Foundation Standards (NSF) or their equivalent in the construction of food service equipment. Regardless of whether an approved vendor replacement part or a temporary makeshift part is used, Medical Department personnel is responsible for ensuring that the part is safe for food contact surfaces.

2.2 Major Safety Concerns. Food service equipment, if handled improperly, can present hazards such as electric shock, gas explosions, burns, and cuts. Incorporate safety concerns into maintenance plans and training programs. Follow specific safety guidelines involved in maintenance of food service equipment as discussed below.

a) Use appliances only for their intended purpose.
b) To clear a jammed piece of rotating or cutting equipment, turn off and disconnect the equipment from its power source.
c) After completing maintenance actions, do not leave the equipment unattended for long periods of time while testing.
d) When reassembling equipment with rotating parts, be sure that all moving parts, such as cutting blades, are properly attached and have adequate clearance to operate.
e) Use authorized electrical lock-out/tag-out/try-out procedures in accordance with Occupational Safety and Health Administration (OSHA) 29 CFR 1910.147, Sources of Standards, to prevent accidental operation of food service equipment while it is being serviced.
f) Most electrical appliances must be grounded and are provided with a three wire grounding plug. Ensure that all equipment cords and wall receptacles provide the third prong or slot for grounding.
g) Be aware of adjacent operating equipment. Do not defeat safety interlocks, pressure relief valves, equipment guards, feed plates, or other automatic or passive safety devices.
h) Do not attempt to repair electrical components in a wet environment.
i) Do not work on pressurized or operating equipment unless a specific operating procedure requires that you do so.

j) Note the location of fire protection, medical, and/or safety equipment.
k) Make sure unit is turned off and unplugged before beginning maintenance work.
l) Partially rely on smelling unburned gas. Check for evidence of gas before attempting to light a gas appliance.
m) Ensure each gas appliance has a manually operated, gas shut-off valve. Locate this primary valve ahead of all other valves in the system.
n) Lock the main gas shut-off valve in the closed position when personnel must enter an oven or when the appliance is not in service.

2.3 Environmental Concerns. With an ever-increasing emphasis placed on the environment, maintenance crews need to be aware of potential hazards associated with disposal of food substances such as oil and grease. Additionally, there are parts which are to be handled as hazardous waste. These can include mercury thermometers, chemical treatments used for descaling, corrosion inhibitors, and lubricant waste. Public Works or Engineering Field Division personnel can assist in solving specific problems that may be encountered.

Section 3: FOOD PREPARATION AND NON-HEATING ELECTRICAL APPLIANCES

3.1 Scope and Maintenance. This section covers non-heating electrical equipment used to prepare served or cooked foods. Equipment covered includes peelers, mixers, dough rollers, slicers, blenders, and similar appliances. This handbook is not intended to replace specific manufacturer's guidance (e.g., inspecting, testing, lubricating, adjusting, calibrating) for specific equipment models; rather, it provides a common base for developing comprehensive activity maintenance programs. Follow maintenance concepts outlined in para. 1.3.

3.2 Safety Procedures. Follow the safety guidelines as discussed below. (Safety aspects covered in the system's specifications, but not in the TM, are included in the maintenance section for that specific equipment system.)

a) Since appliances designed to slice and cut have sharp blades, use caution in their operation and maintenance.
b) Turn off or unplug machines before beginning any maintenance work.
c) Remove the appliance to a dry and clean area when performing live circuit work.
d) When cleaning small motorized appliances such as mixers, blenders, and slicers, be sure the motor is not immersed in water.

3.3 Dough Roller

3.3.1 General Description. Dough rollers are used in the preparation of pies, pizzas, and other pastries. A ball of dough is fed into rollers to form a round or oblong sheet of dough. The roller spacing controls the thickness of the dough. Multiple passes through the machine produce progressively thinner sheets of dough. Dough rollers are provided with a safety shut-off.

3.3.2 Major Dough Roller Components. Major dough roller components include belt drive, motor, scrapers, and the following components shown in Figure 2.

3.3.3 General Operation. Dough rollers are powered by an electric motor. To keep dough from sticking to the rollers, a flour hopper is used to dust rollers with flour. Also, spring-loaded scrapers keep the rollers free of dough. The spacing of the rollers is manually set before the dough is passed through. At the completion of the pass, the roller spacing is decreased. Additional passes may be required for thinner dough.

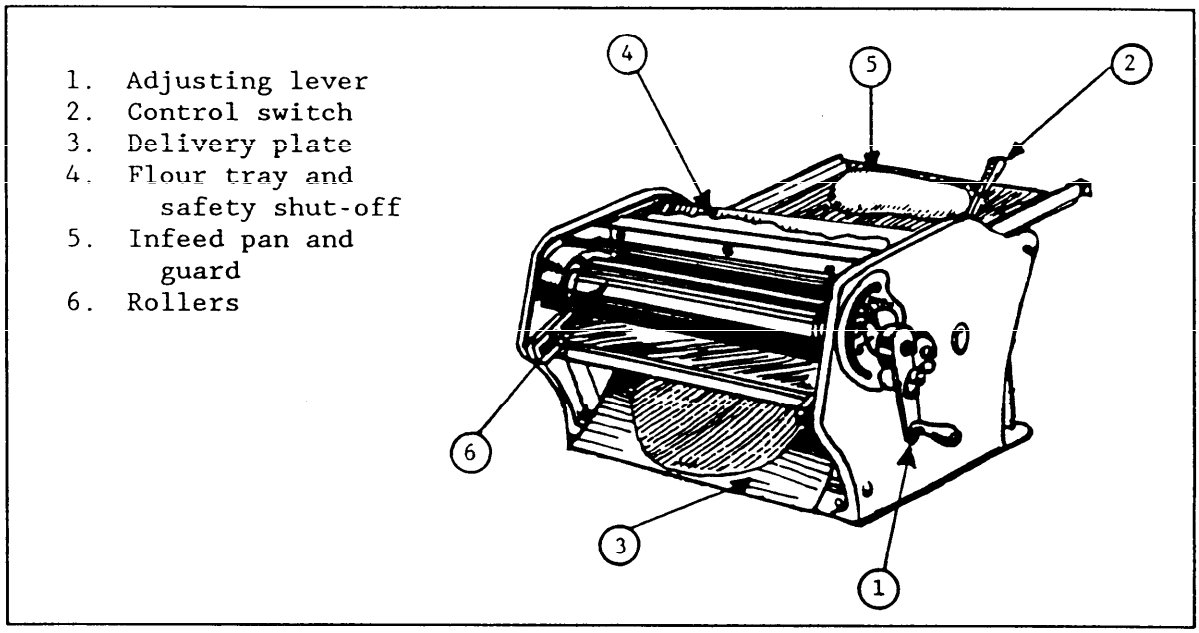

Figure 2
Major Dough Roller Components

3.3.4 Operation Hints for Dough Rollers

a) Do not clean scraper blades with a metal object, or while they are still on the machine. This could result in damage to the roller surface.
b) Check the scraper blades continually for dough buildup during operation.
c) Check the spring tension on the scraper assembly; lack of it could result in improper scraping of the rollers.
d) Check to be sure the dough is properly "rested" and the flour bin is filled; if not, the dough may stick to the rollers. This reduces efficiency and causes excess resistance in the motor.
e) Check the manufacturer's literature for maximum weight of dough the roller can handle at one time.
f) Never use water to clean the rollers or mechanism. Use only a dry or lightly oiled cloth because water may damage the finish.

3.3.5 Maintenance for Dough Rollers. Refer to Table 1 for recommended operator and maintenance personnel procedures.

Table 1
Recommended Operator and Maintenance Personnel
Procedures for Dough Rollers

FREQUENCY	OPERATOR PROCEDURE
D	Wipe entire machine with dry cloth.
D	Wipe rollers with dry or lightly oiled cloth.
W	Cover bare spots on rollers with mineral oil.
FREQUENCY	**MAINTENANCE PERSONNEL PROCEDURE**
M	Grease fittings and shaft bearings (check manufacturer's literature).
M	Lubricate roller ends.
Q	Check and treat for rust and/or corrosion.
SA	Inspect and lubricate chain drive assembly.
SA	Check operation of conveyor roller clearance and adjust as necessary.
SA	Check motor and bearing for overheating by hand touch.
SA	Lubricate conveyor drive bushings and chain drive.
SA	Inspect and lubricate wheels and mountings.
A	Check electric motor, controls, wiring, connections, and insulation for dirty or defective materials.
AR	Check belt tension and adjust as required.

3.3.6 Troubleshooting for Dough Rollers

a) Appliance will not start.
   (1) Breaker tripped.
   (2) Motor inoperative, see subpara. (3), below.
   (3) Drive linkage (belt or chain) damaged.
b) Motor starts, but rollers do not turn.
   (1) Gears jammed.
   (2) Drive linkage (belt or chain) damaged.
   (3) Large dough pieces between rollers.
c) Motor does not run.
   (1) Defective speed control device.
   (2) Motor jammed.
   (3) Open or short circuit.
   (4) Dirty motor commutator.

3.4 Mixers

3.4.1 General Description. Mixers are designed to stir, blend, beat, and mix dry or wet ingredients. Mixers use paddles, beaters, whips, or hooks. Mixers are classified according to the size of bowl they accommodate, from 5 qt. to 320 qt. Small models are table mounted, while larger models are floor mounted. Larger bowls are clamped onto a "bowl lift" and mechanically, hydraulically, or electrically lifted to the agitator. Some very large models have wheel-mounted bowls that roll up to the mixer and lock onto the base.

In performing maintenance on a mixer, check the manufacturer's literature since many models and sizes of mixers are in use and each will have specific work to perform.

3.4.2 Major Mixer Components. Major mixer components include belt, motor, variable speed control, and the components listed in Figure 3.

3.4.3 General Operation. Mixers are driven by an electric motor that may be single or three phase operating with an electric service of 115 to 240 volts. These units are usually gear driven, but some larger models are belt-driven. The speed of the agitator shaft is variable, from 95 to 380 rpm.

3.4.4 Operation Hints for Mixers. Parts that come in contact with food must be lubricated with mineral or vegetable oil.

Running a mixer with broken or improper beaters may cause excessive wear on the bowl and/or motor. Repair or replace beaters/whips regularly or when signs of wear are apparent.

Check the agitator clearance between each bowl change. Make sure the agitator does not touch the bowl to avoid damaging the agitator shaft, gears, and bowl. Follow the manufacturer's instructions for adjusting the bowl height.

Adjust the bowl clamp to make sure it is the proper height for the bowl being used.

1. Beater, whip, or hook
2. Bowl
3. Bowl clamp
4. Bowl lift
5. Control switches
6. Gear assembly
7. Planetary gear set
8. Timer

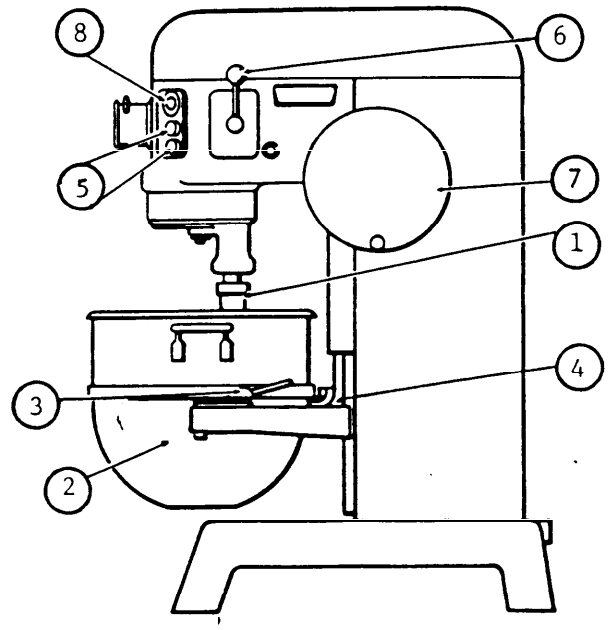

Figure 3
Major Mixer Components

3.4.5 Maintenance for Mixers. Refer to Table 2 for recommended operator and maintenance personnel procedures.

Table 2
Recommended Operator and Maintenance Personnel Procedures for Mixers

FREQUENCY	OPERATOR PROCEDURE
D	Clean bowl, beaters, whips, and outside of mixer.
D	Listen for unusual noises.
D	Feel motor for overheating.
FREQUENCY	**MAINTENANCE PERSONNEL PROCEDURE**
D	Listen for unusual noises.
M	Wipe drip cup clean.
M	Lubricate attachment.
Q	Check oil level in transmission case and planetary of gear-driven mixers.
Q	Check bowl lift mechanism for smooth operation.
Q	Check grease fittings.
Q	Check belt for wear and proper tension.
SA	Grease planetary gear.
SA	Feel motor for overheating.
SA	Check for worn, frayed, or dry rotted belt.
SA	Check oil level in clutch, gear, and transmission.
SA	Check packing glands and seals on agitator shaft, and tighten or replace, as needed.
SA	Check and tighten mounting bolts.
SA	Check planetary oil level.
A	Check oil pump.
A	Check motor connections and wiring, controls, etc.
A	Check alignment of motor shaft for excess vibration.
A	Check bowl lifting devices and bowl clamps for wear and defects. Lubricate and replace as necessary.
AR	Drain and refill transmission fluid (see manufacturer's literature).
AR	Remove beater shaft, thoroughly clean, and refill the oil.
AR	Clean motor of food particles.

3.4.6 Troubleshooting for Mixers

a) Mixer will not start.
   (1) Gear shift lever is not fully engaged or is stuck between gears.
   (2) Circuit protector in open position.
   (3) Mixer or attachment overloaded.
   (4) Loose wiring, check all connections.
   (5) Bowl guard is not in "start" position.
   (6) Mixer not plugged in.
   (7) Fuse blown.
   (8) Timer not set.
   (9) Lock arm not fully engaged.
b) Agitator touches bowl.
   (1) Bowl clamps not closed.
   (2) Improper agitator clearance.
   (3) Bowl clamps improperly adjusted.
c) Planetary seal squeaks.
   (1) Bowl clamps not closed.
   (2) Improper agitator clearance.
   (3) Bowl clamps improperly adjusted.
   (4) Needs lubrication.
   (5) Seal worn; needs replacement.
d) Bowl drive making noise.
   (1) Bowl drive gear needs lubrication.
   (2) "Lock arm" not fully engaged.
e) Mixer is hot or smoking.
   (1) Motor is defective.
   (2) Improper voltage supplied to motor.
   (3) Belt is slipping.
   (4) Gear box low on oil, or oil is old.
   (5) Wiring worn.
f) Motor runs, but beater shaft not turning.
   (1) Belt is slipping or broken.
   (2) Loose pulley or shaft.
   (3) Gear worn. Check oil pump; replace gear if necessary.
   (4) Speed adjustment set beyond maximum limit
   (5) In between gears; examine clutch and gear shift lever.
g) Attachment is striking bottom of bowl.
   (1) Bowl support is out of adjustment.
   (2) Attachment collar on beater shaft set too low.
   (3) Dented bowl.
h) Bowl will not rise or lower.
   (1) Elevator screw is stripped.
   (2) Elevator drive gears are not meshing properly.
   (3) Adjustment hand wheel is loose.

3.5 Vertical Cutter Mixers

3.5.1 General Description. Also known as a food processor, a vertical cutter mixer is designed to cut and mix most ingredients simultaneously. It can produce all types of foods that require cutting, mixing, blending, or emulsifying.

This appliance comes with a cutting bowl to hold the product during chopping and grinding operations, or a continuous feed lead that provides for a continuous flow of product to pass through the appliance for slicing.

3.5.2 Major Vertical Cutter Mixer Components. Major vertical cutter mixer components include blade(s), "bowl", control switch, cover, discharge plate, frame, and safety mechanism/switch.

3.5.3 General Operation. These units are electric appliances that come in either 110V or 220V models and are capable of operating between 900 and 1800 RPM. The vertical cutter mixer is mounted on a steel tubular frame. Bowl covers are form fitting and can be locked to seal the cover to the bowl. The motor operates a vertical shaft that provides the rotary cutting action for the unit. Bowls or continuous feed attachments are placed over the shaft, then a blade assembly is put on. Blades may be either 2 or 4 prong, or an assortment of cutting, grating, or slicing plates. One set of special tools and wrenches (necessary for removal and replacement of knife blades, etc.) is included. Use of the bowl attachment results more in a blending action. The continuous feed attachment provides for a continuous feeding of the product that is to be sliced or ground.

3.5.4 Operation Hints for Vertical Cutter Mixers. These units operate best when:

a) Used on a level work surface.
b) Bowls are filled only three-quarters full.
c) Product is not forced through the continuous feed attachment.
d) Motorized base is cleaned with damp sponge, never immersed in water.
e) Blades, plates, and attachments are secured tightly before energizing.
f) Some models have safety features that will prevent the motor from operating if cutter bowl or continuous feed attachments are not securely fastened to base.

3.5.5 Maintenance for Vertical Cutter Mixers. Refer to Table 3 for recommended operator and maintenance personnel procedures for vertical cutter mixers. Test operate safety switch by releasing top cover hold down lever and slightly lifting cover and setting the toggle switch to ON. Motor should not start. CAUTION: Do not operate equipment with defective safety devices.

Table 3
Recommended Operator and Maintenance Personnel
Procedures for Vertical Cutter Mixers

FREQUENCY	OPERATOR PROCEDURE
D	Wash all attachments, blades, and plates (use stiff bristle brush).
D	Sponge the motor/base assembly with soluble detergent - keeping seals dry.
D	Clean motor shaft, pins, and holes (use small brush).
FREQUENCY	**MAINTENANCE PERSONNEL PROCEDURE**
SA	Check motor and bearings for overheating by hand touch.
SA	Lubricate slicer.
SA	Check condition of blades, blade guards, guides, and controls.
A	Check motor and bearings.
AR	Sharpen cutter blades.
AR	Replace seals when showing signs of wear or erosion.

3.5.6 Troubleshooting for Vertical Cutter Mixers

a) Unit will not start.
   (1) Not assembled properly.
   (2) No power.
   (3) Switch not turned on.
   (4) Bowl or continuous feed not attached or properly seated.
b) Bowl or continuous feed lead will not fit flush with motor base.
   (1) Processing plate (blade) not properly seated.
c) Unit stops running while processing.
   (1) Turn unit off and check for jammed blade.
   (2) Check breaker or fuse.
   (3) Cutting plate not fully seated.
d) Unit makes grinding noise.
   (1) Processing plate is warped and rubbing.
   (2) Plate not fully seated, motor shaft dirty.
e) Food coming out in bunches.
   (1) Discharge plate upside down.
f) Food coming out in bad shape, watery, balled up.
   (1) Blade is dull.
   (2) Bad product going in.

3.6 Peelers

3.6.1 General Description. Peelers are barrel-like electric appliances used to peel vegetables (usually potatoes). They may be counter mounted or floor mounted. The inside of the barrel has an abrasive lining. A vegetable is put in and tumbles against the abrasive lining to remove the peel.

3.6.2 Major Peeler Components. Major peeler components include a motor and the components shown in Figure 4.

1. Barrel cover
2. Control switch
3. Discharge door
4. Discharge door handle
5. Drain/waste outlet
6. Timer
7. Water inlet

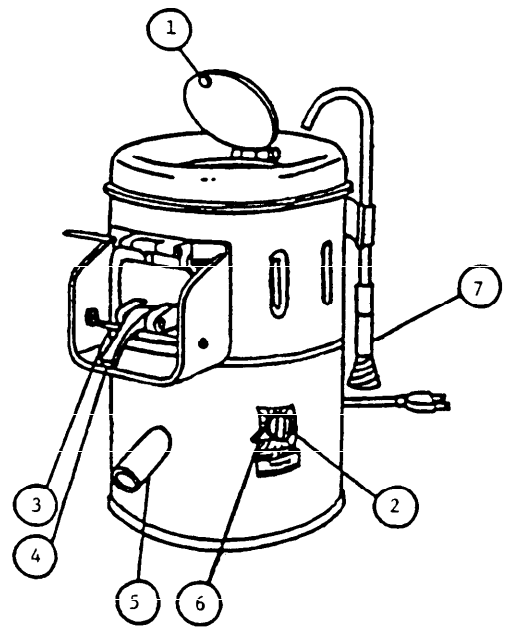

Figure 4
Major Peeler Components

3.6.3 General Operation. The vegetable is put in, and the timer is set. The floor of the chamber is turned by a 115V motor that causes the vegetable to scrape against the abrasive barrel lining. The peeler is equipped with a water sprayer so that the vegetables are washed as the skins are being removed. A barrel cover prevents vegetables and water from flying out of the peeler as they are being tumbled. A small stream of water flushes the

peelings and waste water out of the peeler through a waste outlet. The vegetable is removed by leaving the discharge door open and turning the machine on.

3.6.4 Operation Hints for Peelers. Do not overload. Peelers have a capacity based on the weight of U.S. Grade 1 potatoes. Twenty pounds is a typical capacity. There should always be room in the peeler for complete tumbling of vegetables for proper peeling. Unusually large or long potatoes may require a slight reduction in load to obtain satisfactory results.

3.6.5 Maintenance for Peelers. Refer to Table 4 for recommended operator and maintenance personnel procedures.

Table 4
Recommended Operator and Maintenance Personnel
Procedures for Peelers

FREQUENCY	OPERATOR PROCEDURE
EU	Remove cover and peeling disc. Wash thoroughly with cold water.
EU	Wash inside of peeler and flush out thoroughly.
W	Turn grease cups 1/4 turn.
FREQUENCY	**MAINTENANCE PERSONNEL PROCEDURE**
SA	Lubricate peeler by lubricating bushings and filling grease cup with light motor oil.
SA	Check motor wiring, connections, etc.
SA	Inspect abrasive disk.
SA	Check belts for proper tension and alignment.
A	Check door for loose hinges and latch fittings.
A	Check piping and valves for leaks.
A	Lubricate drive mechanism.

3.6.6 Troubleshooting for Peelers

a) The peeler leaks.
   (1) Shaft seals worn.
b) Peeler disk will not rotate.
   (1) Improper voltage to motor.
   (2) Loose or damaged drive belts.

(3) Peeler disc jammed.
(4) Motor inoperative.

c) Grease cup will not turn.
(1) Refill with grease.

3.7 Slicers

3.7.1 General Description. Slicers are used to slice meats, cheeses, vegetables, and other foods to a specific thickness. Slicers are electrically powered in 110V and 220V models. The product to be sliced is placed upon the carriage and pressed up against the gauge plate by a grip. The position of the gauge plate determines the thickness of a slice. The gauge plate is parallel to and behind the circular cutting edge.

3.7.2 Major Slicer Components. Major slicer components include the motor and the components listed in Figure 5.

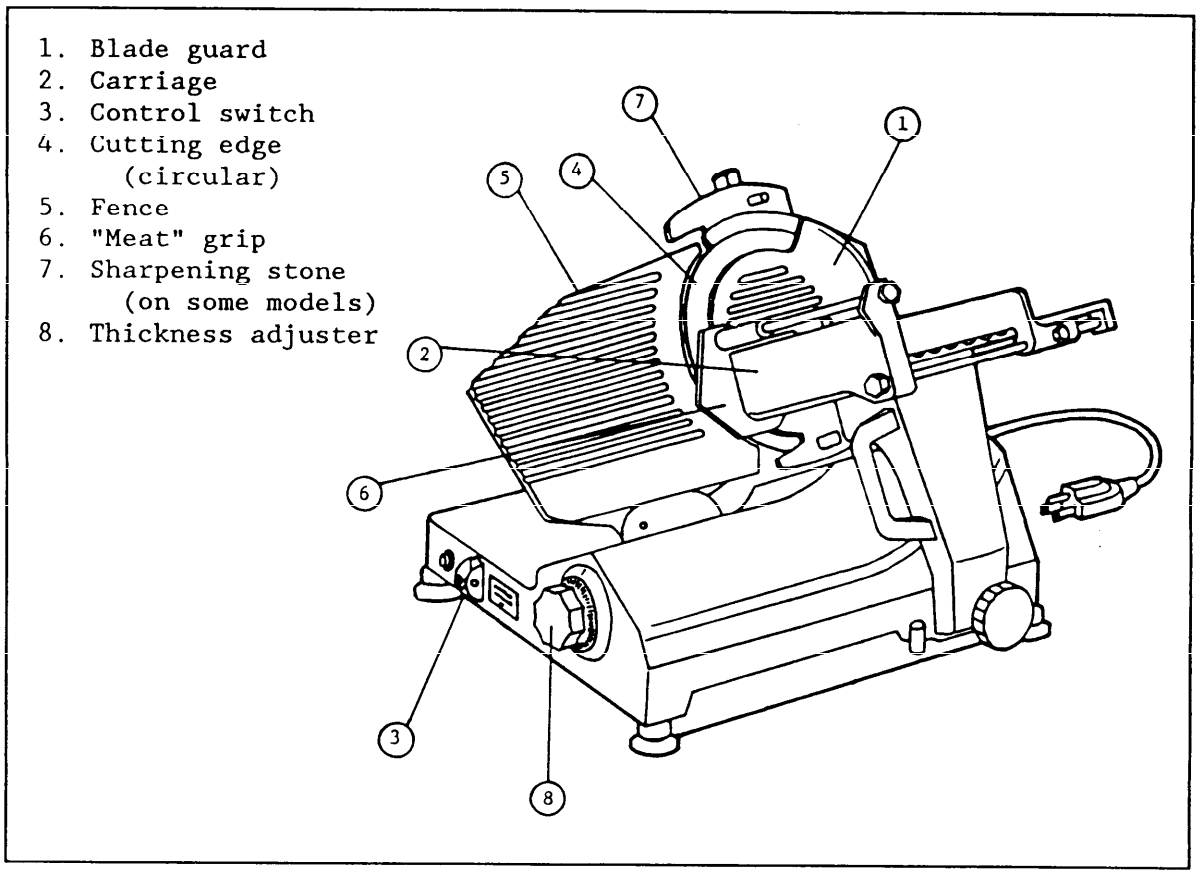

Figure 5
Major Slicer Components

3.7.3 General Operation. Slicers have a small single-speed motor, although some models have gear reduction assemblies to run the blade assembly at multiple speeds. Units are equipped with movable blade guards that cover the portion of the blade not being used to slice. A slice adjuster is utilized to move the gauge plate closer and farther from the blade, adjusting the slice thickness.

3.7.4 Operation Hints for Slicers. When the slice adjustment is at zero thickness, the gauge plate is exactly even with the blade; no sharp edges are exposed. This should be done whenever the slicer is not in use.

Do not wash polished aluminum parts in a dishwasher or pan washer; wash by hand.

As blades dull, sharpen according to manufacturer's recommendations. Often, slicers will have sharpening stone attachments provided with the appliance. Adjustment of the gauge plate will become necessary as the blade wears. When the blade is reduced to a certain diameter due to sharpening, it needs to be replaced. Check the manufacturer's literature for the replacement diameter.

3.7.5 Maintenance for Slicers. Refer to Table 5 for recommended operator and maintenance personnel procedures.

3.7.6 Troubleshooting for Slicers

a) Motor will not start.
   (1) Switch defective.
   (2) Breaker tripped or fuse blown.
   (3) Motor defective.
   (4) Defective relay.
b) Blade will not turn, but drive motor operates.
   (1) Jammed.
   (2) Stripped worm gear or broken worm coupling.
c) Slice adjuster will not move the gauge plate.
   (1) Gear/screw stripped.
   (2) No grease.
   (3) Obstruction.
d) Carriage loose or hits blade.
   (1) Carriage misaligned.
e) Slicer cuts wedge shaped slices.
   (1) Gauge plate bent or out of alignment.

Table 5
Recommended Operator and Maintenance Personnel
Procedures for Slicers

FREQUENCY	OPERATOR PROCEDURE
D	Thoroughly clean the surface of the unit, keeping the blade guard in place.
W	Make sure the gauge plate is parallel to the blade.
AR	Sharpen blades per manufacturer's literature.
FREQUENCY	**MAINTENANCE PERSONNEL PROCEDURE**
M	Add a few drops of oil to sliderods and/or wick system for the carriage slide.
SA	Inspect condition of blade, blade guard guides, and controls.
A	Lubricate motor bearings.
A	Check sharpening stones, replace as necessary.
AR	"Meat Grip" may or may not ever need tasteless oil. Check manufacturer's literature to verify if and when to do this.

Section 4: DRINK DISPENSERS AND ASSOCIATED EQUIPMENT

4.1 Scope and Maintenance. This section covers equipment used to dispense beverages and to produce and dispense ice. Equipment covered includes ice makers and dispensers; coffee makers, warmers, and urns; juice and tea dispensers; bulk milk dispensers; hot beverage dispensers (hot chocolate and hot tea); and carbonated beverage systems. This handbook is not intended to replace specific manufacturer's guidance (e.g., inspecting, testing, lubricating, adjusting, calibrating, etc.) for specific equipment models; rather, it provides a common base for developing a comprehensive activity maintenance program. Follow maintenance concepts outlined in para. 1.3.

4.2 Carbon Dioxide Cylinder Safety. An important concern is the safe handling, storage, and use of carbon dioxide cylinders for carbonated drinks. Consult the Department of Transportation (DoT) for the latest information on handling and transporting gas cylinders.

Test carbon dioxide cylinders every 5 years as required by the DoT. The following are precautions with respect to the cylinder and its contents.

a) Never attempt to use the contents of a cylinder without a suitable pressure-regulating device.
b) Use proper wrenches in tightening connections.
c) Never force connections that do not fit.
d) Never hammer the valve wheel in an attempt to open or close it.
e) Never permit gas to enter the regulating device suddenly.
f) Open the cylinder valve slowly and fully.
g) Never rely on the regulating device to shut off flow for periods of non-use.
h) Close the main valve, not just the regulating valve, when not in use.
i) Tightly screw valve outlet cap onto each cylinder after it is filled with gas. The valve outlet cap is to prevent loss of carbon dioxide and damage to the valve outlet threads.
j) Secure cylinders to a wall, post, or guard rail by an adjustable chain or other acceptable device. This will prevent it from being accidentally knocked over.

Carbon dioxide cylinder safety valves are designed to burst when tank pressure rises between 2700 and 3000 psi. If the cylinder is overfilled and/or exposed to extreme heat causing high internal pressure, the valve will allow the carbon dioxide to be released safely. Never loosen or attempt to adjust the safety valve under any circumstances.

Carbon dioxide cylinders in extreme heat produce high pressure. Never expose cylinders to temperatures in excess of 114 degrees F.

4.3 Ice Makers

4.3.1 General Description. There are three styles of ice makers: floor, counter, and wall. Ice makers freeze water into cubes or flakes and dispense them into a refrigerated storage bin. Ice is normally removed from the bin manually. Some manufacturers make dispensers that can automatically dispense the ice from the bin. This is considered a separate piece of equipment and is addressed in para. 4.4. Accessories include fans, reduction gears, harvesting equipment, and pumps.

4.3.2 Major Ice-Maker Components. Major ice-maker components include blow down system, condensing unit, evaporator, refrigeration unit, solenoid valve, starter relay, thermostat, water pan, and water pump.

4.3.3 General Operation. There are various methods for making ice. The two main types of ice makers are the flaker and the cuber. In general, ice machines are connected to the building's water supply, which is circulated into the holding cell(s), where it is frozen into cubes or a sheet. When the ice is completely frozen, it is dispensed into a refrigerated storage bin. If a sheet of ice is made, the sheet is sectioned into cubes or flakes. When the bin reaches capacity, the ice maker will automatically stop ice production. At this point, a self-cleaning/flushing system can be activated to clean out any accumulation of dirt in the machine.

4.3.4 Operation Hints for Ice Makers. An ice maker's capacity is based on the weight of ice produced with an incoming water temperature of 40 degrees F and room temperature of 60 degrees F. To keep the unit operating efficiently, keep it away from heat sources and in a well-ventilated area.

a) The ice machine may fail to produce ice if it is not level. Check this first if production ceases or varies.
b) If the water is not conditioned, chances of having sludge buildup and/or cloudy ice increase. Frequent cleaning may be required.
c) If water is pure, ice will stick to the water plates. The water plates may require lubrication with F.D.A. approved silicon.
d) Avoid using any heat reclamation device that taps into the refrigeration system.
e) Do not shut off cuber when it is filling with water. This will result in insufficient water to fill the cubes for the next two cycles.

4.3.5 Maintenance for Ice Maker. Refer to Table 6 for recommended operator and maintenance personnel procedures.

Table 6
Recommended Operator and Maintenance Personnel Procedures for Ice Makers

FREQUENCY	OPERATOR PROCEDURE
D	Clean exterior.
D	Examine cubes for consistency.
W	Inspect motor area and insulation panels for pest infestation.
FREQUENCY	**MAINTENANCE PERSONNEL PROCEDURE**
W	Vacuum or blow free lint in and around motor, insulation panel, and condenser coils.
Q	Clean condenser.
Q	Check water pan float for proper operation.
SA	Oil/lubricate all moving parts.
AR	Clean ice-making machine per instructions in Manual of Naval Preventive Medicine.
AR	Clean ice making section per manufacturer's instructions.

4.3.6 Troubleshooting for Ice Makers

a) Ice-maker will not start.
   (1) Line fuse blown.
   (2) Bin full of ice.
   (3) Overheated evaporator.
   (4) Room too cold.
   (5) Water supply inadequate.
b) Water pump does not operate.
   (1) Fuse blown.
   (2) Pump bearings defective.
   (3) Pump windings burned out.
   (4) Circuit incomplete between pump and switch.
c) Compressor does not operate.
   (1) Open wash switch.
   (2) Overload switch defective.
   (3) Inoperative capacitors.
   (4) Defective compressor.
   (5) Excessive refrigerant.
d) Most cubes not fully formed.
   (1) Low pressure from water pump.
   (2) Clogged strainer in tank outlet.
   (3) Leak in water circulation system.
   (4) Water plate not aligned.

e) Holes in cubes.
   (1) Expansion valve not set properly.
   (2) Shortage of refrigerant.
   (3) Water level too low.
f) Ice-maker stops when bin is not full.
   (1) Bin control adjusted too warm.
   (2) Defective bin probe.
   (3) Shorted evaporator probe.
   (4) Bin probe too low.
g) Low flaker production.
   (1) Incorrect head pressure.
   (2) Inadequate water supply.
   (3) Deflector closed.
   (4) Room too warm.

4.4 Ice Dispensers

4.4.1 General Description. Ice dispensers are large refrigeration units that store and dispense shaved or cubed ice. Models are available that dispense continuously and/or in pre-determined portions. For models that both make and dispense ice, consult this section for information about the dispenser and para. 4.3 for information about the ice maker.

4.4.2 Major Ice Dispenser Components. Major ice dispenser components include auger/agitator, dispensing motor, condenser, drip pan, dispenser chute, and icebin.

4.4.3 General Operation. This unit is very simple: ice in, ice out. Ice is put in the storage bin automatically from the maker, or it is manually transferred. It is then dispensed into individual containers by an auger that takes the ice from the bin. Dispensing is controlled by a rocker switch for continuous operation or by pre-determined portions.

4.4.4 Operation Hints for Ice Dispensers. Keep freeze cycle as short as possible. This will help prevent the ice from clumping. Also, keep drain pans and drain yoke free of leaks to prevent water from splashing on the ice in the bin and freezing cubes together.

Ice may begin backing up and jam the dispenser chute if the container receiving the dispensed ice is overfilled. Subsequent to servicing an ice dispenser that has jammed, empty the bin completely and wash out all ice shards before the unit is put back into service.

4.4.5 Maintenance for Ice Dispensers. Refer to Table 7 for recommended operator and maintenance personnel procedures.

CODE NAME AND ADDRESS

Table 7
Recommended Operator and Maintenance Personnel
Procedures for Ice Dispensers

FREQUENCY	OPERATOR PROCEDURE
D	Clean exterior.
M	Clean interior.
FREQUENCY	**MAINTENANCE PERSONNEL PROCEDURE**
SA	Clean condenser.
SA	Oil condenser fan motor.
AR	Replace auger bearings.

4.4.6 Troubleshooting for Ice Dispensers

a) Ice dispenser will not run.
   (1) Thermostat on bin or evaporator is open or defective.
   (2) Control relay defective.
   (3) Circuit breaker tripped or fuse blown.
b) Ice dispensers will not start with low ice level in storage bin.
   (1) Bin level control thermostat is out of adjustment.
c) Ice dispenser does not dispense ice.
   (1) Ice jammed in discharge spout.
   (2) Defective dispense switch.
   (3) Relay contacts are being held open. Check relay for mechanical failure.
   (4) Motor overload protection tripped.
   (5) Broken auger shear pin.
   (6) Burned out motor.
d) Ice dispenser will not stop when the storage bin is full.
   (1) Thermostat out of adjustment or defective.
e) Water leaking from bottom of evaporator.
   (1) Defective seal on bottom of evaporator.

4.5 Coffee Makers/Urns

4.5.1 General Description. Coffee makers brew one decanter at a time by spraying hot water over a basket of coffee grounds. Water can either be percolated or dripped. An average decanter holds about 72 oz. (12 cups) of coffee. The water is supplied by building hookup or is manually poured in as needed. The coffee maker shall have a thermostatically controlled heat exchanger or electrically heated tank to make available hot water for

continuous operation. Coffee and water are kept warm by bottom heat from warming plates. Commercial coffee makers usually provide one or more additional warming plates for multiple decanters of different products.

The coffee urn consists of a non-pressure vented water tank heated by either electric immersion heaters or steam controlled by a thermostat and relay. The heating source keeps the water in the tank at the desired temperature. The coffee is brewed in a liner next to the water tank. If there is one coffee liner, the urn is called a single urn; two coffee liners, a twin urn.

4.5.2 Major Coffee Maker and Urn Components. Major coffee maker components are deflector, drain valve, heating elements, siphon tube, and the components shown on Figure 6. Major urn components are agitator (on some units), heating element, low water cut-off, thermostat, and the components shown on Figure 7.

4.5.3 General Operation. In drip coffee makers, water is released into the tank at a controlled rate. As cold water enters the tank, hot water already present in the tank rises to the top above the outlet tube. Once in the tube, water "drains" to a deflector, which sprays the hot water over the coffee grounds. There is a siphon cap on the outlet tube to regulate the flow of water from the tube. Ensure that water temperature from the nozzle is 190 to 192 degrees F and that it never falls below 184 degrees F.

A coffee urn has hot water in the jacket around the coffee tank. This water is automatically measured and pumped from the jacket and sprayed over the basket of grounds in the tank. The water flow is started or stopped by a solenoid water valve and controlled by a reset timer. The water in the water tank is always kept at full level by an automatic refill. Some coffee urns are provided with automatic programmed air agitation of coffee after spray-over stops. This saves the hazard of a manual repour.

Unvented water tanks shall incorporate the following safety device(s): a high limit heater safety or a combination high temperature-pressure relief valve, fusible plug or link, or burn-out heating elements.

4.5.4 Operation Hints for Coffee Makers/Urns

a) The hardness of the water is a major factor in determining how often an urn's solenoid water valve, automatic flow control valve, strainer, spray arms, spray nozzles, and bypass valve should be cleaned. Also, hard water can cause trouble in the operation of the urn due to liming or scaling.
b) To produce consistently brewed coffee, make sure the spray pattern is even by keeping the machine level.
c) Never leave empty decanters on the warming plate while the heater is turned on.

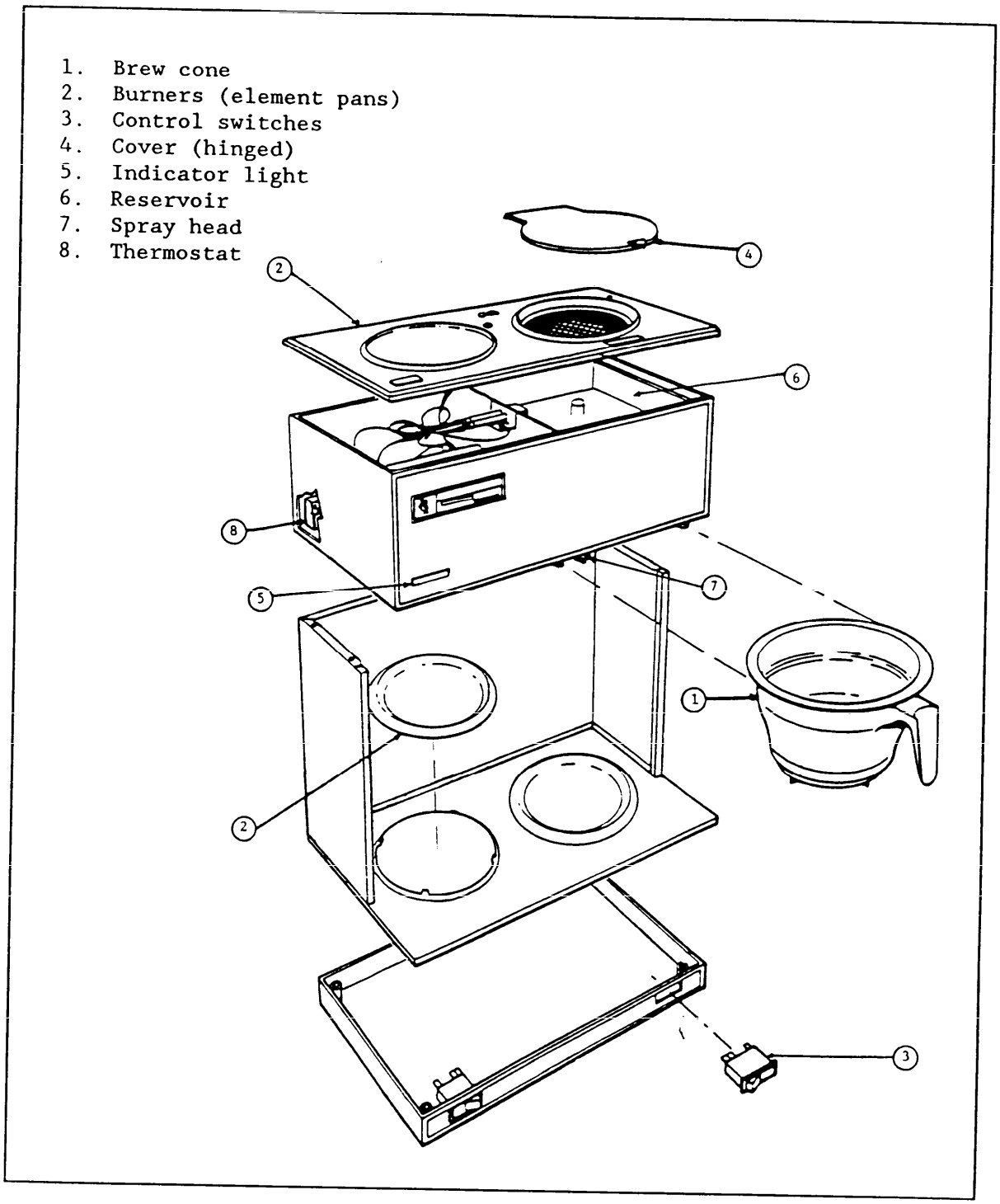

Figure 6
Major Coffee Maker Components

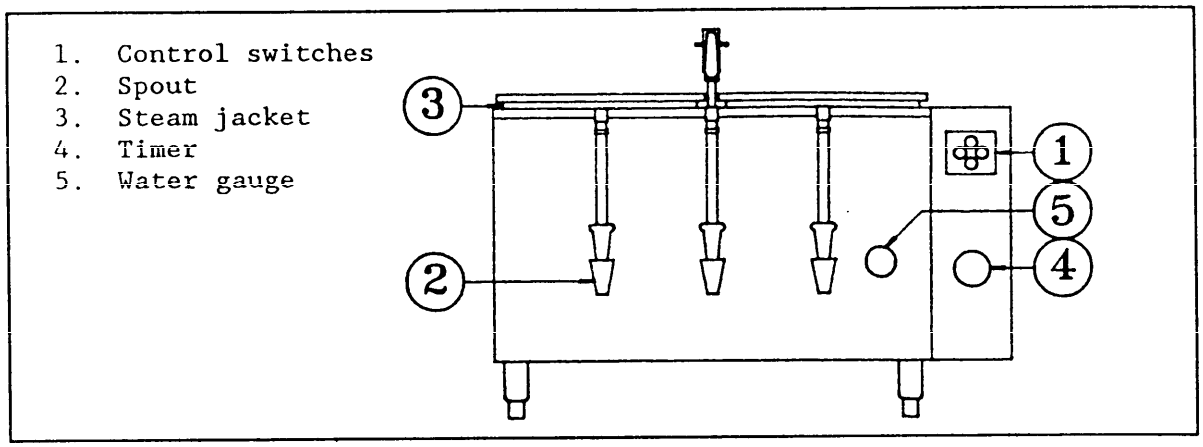

Figure 7
Major Urn Components

4.5.5 Maintenance for Coffee Makers/Urns. Refer to Table 8 operator and maintenance personnel procedures. See para. 5.1 for the maintenance of gas burners.

4.5.6 Troubleshooting for Coffee Makers/Urns

a) Overheating (i.e., water boiling).
   (1) Thermostat defective.
b) Water less than 184 degrees F.
   (1) Lime build-up on heater.
   (2) Coffee is brewed too frequently.
   (3) Defective heater.
   (4) Thermostat not set at 184 degrees F.
   (5) Thermostat defective.
c) Water not heated.
   (1) Unit not plugged in.
   (2) Blown fuse.
   (3) Main switch off or defective.
   (4) Heater defective.
   (5) Thermostat defective.
   (6) Defective warmer switch/heater.
   (7) Timer mechanism defective.
d) Erratic delivery.
   (1) Unit not level.
   (2) Siphon cap missing, warped, or obstructed.
e) Overload trips repeatedly.
   (1) Low water level in tank.
   (2) Defective thermostat.
   (3) Defective overload.
   (4) Timer mechanism faulty.

Table 8
Recommended Operator and Maintenance Personnel
Procedures for Coffee Makers/Urns

FREQUENCY	OPERATOR PROCEDURE
D	Clean cabinet, including underside of hood. Be sure not to get soap on deflector.
D	Clean warmer plates.
D	Clean brew basket and decanters.
FREQUENCY	**MAINTENANCE PERSONNEL PROCEDURE**
M	Clean and sanitize inside of machine.
SA	Check and clean urn solenoid valve.
SA	Check working pressure.
SA	Check thermostat and temperature gauge on coffee urn/maker. Calibrate if required.
SA	Check electrical connections and wiring for defects. Tighten connection.
SA	Check for clogged or defective steam trap on steam-operated unit.
SA	Inspect and clean steam strainer on steam-operated unit.
A	Examine equipment, valves, and piping for leaks
A	Inspect urns/coffee makers for leaks at water gauge glasses and at valves. Repack valves if necessary.
A	Lubricate water filter valve, check O-rings, tighten as required.
AR	Check operation of lights.
AR	De-lime heating elements.

4.6 Carbonated Beverage Systems

4.6.1 General Description. Carbonated beverages are made by mixing cold carbonated water, soda syrup, and plain water together. The mixture is then dispensed through a fountain head. Carbonated beverage systems are classified by the type of refrigeration unit in the system. The first type has a counter-type refrigeration unit with a self-contained, electric dispensing system. The second system has a remote electric refrigeration unit located adjacent to the dispensing heads. The final type has a remote, refrigerated recirculating carbonated water system. The syrup tanks, carbon dioxide gas

tank, and carbonator in all these systems can be located with the refrigeration system or with the dispensing heads. Consult the manufacturer of the system for information on distance and number of dispensing heads that can be installed.

4.6.2 Major Carbonated Beverage System Components. Major carbonated beverage system components are carbonator relief valve, carbonator tank, compressor, condenser, carbon dioxide gas tank, dispensing unit, liquid level controller, pressure gauge, pump strainer regulator, recirculating pump, syrup tank, thermostat, water check valve, and water pump motor.

4.6.3 General Operation. Carbonated water for a beverage system is made by pumping carbon dioxide and water into the carbonator tank. This water is then cooled by the refrigeration unit. The carbonated water and syrup are pumped to the dispensing unit, where they are mixed immediately before dispensing.

4.6.4 Operation Hints

a) If carbonated water comes in contact with any brass or copper, a toxic substance called copper oxide will be formed, which can cause illness. Be sure that no brass or copper products are used in the installation or repair of a carbonated water circulation system.
b) The water-to-syrup ratio (BRIX) of each product should be in accordance with the syrup manufacturer's recommendations. Various methods exist for checking the BRIX ratio. Consult the equipment manufacturer's literature to determine the most reliable method for each unit.
c) Be careful when handling carbon dioxide cylinders. If anyone experiences effects of excess carbon dioxide leakage (difficulty breathing or hearing, headache, increased blood pressure and pulse, slightly narcotic effect, visual disturbances, ringing in ears, tremors, loss of consciousness), leave the contaminated area and report to a supervisor. Refer to Section 4.2 for tips on the safe handling and use of carbon dioxide cylinders.
d) Sugar and sugar-free (diet) syrup products require different pressures. A separate carbon dioxide, low use low pressure regulator for sugar-free products to prevent excess carbonation and "foaming" of the beverage. Consult the manufacturer's literature or supplier of carbon dioxide tanks for the required pressures.
e) A water purifier may be needed to improve the flavor of the product(s).

4.6.5 Maintenance for Carbonated Beverage Systems. Refer to Table 9 for recommended operator and maintenance personnel procedures.

Table 9
Recommended Operator and Maintenance Personnel Procedures
for Carbonated Beverage System

FREQUENCY	OPERATOR PROCEDURE
D	Wash all external surfaces of dispensing stations.
D	Remove nozzles and valves, clean with mild soap solution, rinse clean.
D	Remove, drain, and wash drip pan and drip plate.
FREQUENCY	**MAINTENANCE PERSONNEL PROCEDURE**
Q	Examine dual check valve on carbonator for proper operation.
SA	Clean condenser.
SA	Clean water strainer screen and carbonator.
AR	If water filter is installed, replace filter cartridge. (Water condition and consumption rate could alter time schedule.)
AR	Lubricate per manufacturer's recommendation.

4.6.6 Troubleshooting for Carbonated Beverage Systems. Refer to para. 7.2.5 for compressor troubleshooting.

a) Water pump motor will not run.
   (1) Blown fuse or circuit breaker.
   (2) Incoming voltage too low.
   (3) Defective toggle switch.
   (4) Defective water pump (should turn freely by hand).
   (5) Defective pump motor.
   (6) Flooded carbonator tank.
   (7) Defective electrode in carbonator.
   (8) Defective liquid level controller.
b) Water pump motor will not stop.
   (1) Restricted water supply.
   (2) Defective electrode in carbonator.
   (3) Defective liquid level control.
   (4) Worn or defective pump.
   (5) Excessive carbon dioxide pressure.
   (6) Defective water check valve.
c) Noisy water pump.
   (1) Inadequate water supply.
   (2) Incoming water supply line is too small (it should be a minimum 1/2-inch inner diameter tubing).
   (3) Pump is vibrating the incoming water line.

d) Carbon dioxide gas or water escaping from the relief valve.
   (1) Excessive carbon dioxide pressure.
   (2) Defective regulator on carbon dioxide tank.
   (3) Carbonator relief valve ring not properly seated.
   (4) Temperature around tank exceeds 114 degrees F.
e) Water backing up into carbon dioxide lines.
   (1) Defective carbon dioxide check valves.
f) Carbon dioxide gas at water faucet.
   (1) Defective water check valve.
g) Beverage(s) taste bad.
   (1) Leaky carbon dioxide and water check valve.
   (2) Brass or copper fittings or tubing in contact with carbonated water.
   (3) Contaminated ice in beverage.
   (4) Nozzles not thoroughly cleaned.
   (5) Improper BRIX ratio.
   (6) Incorrect carbon dioxide pressure (carbon dioxide pressure should be a minimum of 20 pounds greater than water pressure).
h) Poor carbonation.
   (1) Water temperature too high.
   (2) Flooded carbonator.
   (3) Incorrect carbon dioxide pressure (see para. 7.f above).
   (4) Nozzles not clean, buildup of dried syrup.
   (5) Carbon dioxide tank almost empty.
   (6) Syrup tank almost empty.
i) Recirculating pump motor will not run.
   (1) Bronze driver defective.
   (2) Check items under para. 2 above.
j) Recirculating pump motor is noisy.
   (1) Carbonated water is not getting to the pump.
   (2) Pump has broken vanes.
   (3) Worn bronze driver.
   (4) Carbonator tank is frozen up.
k) Recirculating pump is leaking water.
   (1) Seal worn or leaking.
   (2) Pump not properly insulated.
l) Faucet delivers soda and carbon dioxide gas intermittently (spitting).
   (1) Recirculating pump defective.
   (2) Carbon dioxide tank low (almost empty).

4.7 Juice Dispensers

4.7.1 General Description. Juice dispensers are designed to dispense non-carbonated beverages. The product is placed in a bowl and chilled by a refrigeration system located in the base of the dispenser. The capacity of the bowls will vary, and some models are provided with two bowls to allow

different beverages to be dispensed from each bowl. Most models provide a pump that recirculates and mixes the beverage.

4.7.2 Major Juice Dispenser Components. Major juice dispenser components are bowl(s), condensate drain, dispenser mechanism, pump (spray tube), refrigeration unit, and thermostat (preset).

4.7.3 General Operation. The main operating systems of the juice dispenser are the refrigeration unit and the pump or spray system. The bowl has a motor in the bottom, which circulates through the refrigeration unit and back into the bowl through the spray tube.

4.7.4 Operation Hints for Juice Dispensers

a) For proper ventilation of the refrigeration unit, there should be 3 inches of space around the juice dispenser.
b) Juice with high pulp content may plug the pump housing and bind the impeller. A strainer helps prevent this.
c) If only one side is used in dispensers with dual bowls, put water in the unused side to assure proper cooling.
d) The refrigeration unit should be run for approximately 1 hour to cool the beverage prior to serving.
f) When cleaning a juice dispenser, an approved sanitizing cleaning agent is run through the unit. For best results, do not operate the refrigeration system during this procedure.

4.7.5 Maintenance for Juice Dispensers. The following are recommended operator and maintenance personnel procedures.

Table 10
Recommended Operator and Maintenance Personnel
Procedures for Juice Dispensers

FREQUENCY	OPERATOR PROCEDURE
D	Clean and sanitize bowls, spray tube, and impeller.
D	Clean condensate drain.
FREQUENCY	**MAINTENANCE PERSONNEL PROCEDURE**
SA	Clean condenser.
SA	Lubricate pump motor.

4.7.6 Troubleshooting for Juice Dispensers

a) No spray or circulation.
(1) Appropriate switches are not on.

(2) The impeller is not spinning freely; clogged or binding.
(3) Improper alignment between bowl and cabinet.
(4) Spray tube clogged.

b) Bowl leaks.
(1) Condensation on outside of bowl.
(2) Gasket improperly installed or damaged.
(3) Dispenser unit leak; check for holes in the pinch tube.
(4) Lid not properly secured.
(5) Bowl cracked.

c) Juice dispenser will not refrigerate.
(1) Check power, breakers or fuses.
(2) Check refrigeration system as outlined in Section 7.2.

4.8 Milk Dispenser

4.8.1 General Description. A milk dispenser is a manually operated, refrigerated unit that provides sanitary, self-service dispensing of individual portions of milk from bulk containers.

4.8.2 Major Milk Dispenser Components. Major milk dispenser components are dispensing valve, refrigeration system, temperature control, and thermostat.

4.8.3 General Operation. The temperature control is set for normal operating temperatures of 32 to 44 degrees F. The dispensing mechanism uses one of two basic valve types; the spring-loaded slide (or arm), and the weighted valve arm. A weighted valve arm pinches the dispensing tube until it is raised to allow milk to be dispensed.

4.8.4 Operation Hints

a) Keep the unit away from heat-generating devices that could reduce the refrigeration unit performance and efficiency.
b) Make sure there is air circulation on all sides of the unit (including underneath and on top).
c) Allow the unit to run for 1 hour before placing milk containers in the dispenser.

4.8.5 Maintenance for Milk Dispenser. Refer to Table 11 for recommended operator and maintenance personnel procedures.

4.8.6 Troubleshooting. The dispensing valves are simple manual mechanisms requiring minimal troubleshooting. Refrigeration unit troubleshooting has been consolidated into section 7.2.

Table 11
Recommended Operator and Maintenance Personnel
Procedures for Milk Dispensers

FREQUENCY	OPERATOR PROCEDURE
D	Clean external surfaces of the units.
D	Remove valves, disassemble, and clean in hot soapy water according to manufacturer's instructions.
W	Inspect valves to ensure they are secure on valve holders.
FREQUENCY	**MAINTENANCE PERSONNEL PROCEDURE**
SA	Inspect for restrictions under unit and by air duct panel.
SA	Remove rear panel; clean condenser area.
SA	Calibrate thermometer following manufacturer's literature.
A	Check for abnormal compressor noise.

4.9 Hot Beverage Dispenser

4.9.1 General Description. These units mix hot water with a syrup or powdered mix to provide a hot beverage at the touch of a button. They are designed to dispense a measured amount that can be adjusted from 4 to 8 oz. These electrically heated units are 110V, and water is manually added through the top of the unit.

4.9.2 Major Hot Beverage Dispenser Components. Major hot beverage dispenser components are: actuating arm, control switch, heating element, metering valve, Motor (for cam gear), plunger rods, powder or syrup bowl/tank, thermostat, water tank, whipping assembly, and whipper motor.

4.9.3 General Operation. The units use electric heating elements to heat the water that is mixed with either syrup or powder. When the dispensing actuator is pressed, the hot water is drained from the tank through a metering valve into a whipping chamber. Within the whipping chamber, the beverage ingredient is added and whipped at a high RPM into a frothy drink.

4.9.4 Operation Hints. Adherence to the following operating considerations of a hot beverage dispenser will improve performance of the unit.

a) Do not energize the master switch before filling the water tank to avoid damaging the heating elements.

b) After the unit is turned on, it will require about 30 minutes to heat the water before it is ready for service.
c) If the dispenser is not used for 24 hours, remove the syrup bowl and empty the water tank. Refill with fresh water.
d) DO NOT put plastic parts in automatic dishwashers or otherwise subjected to high temperatures to avoid deformation.
e) Keep the water tank as full as possible. Low water levels for extended periods may cause tank damage.
f) After every washing, sanitize syrup bowl and whipping chamber parts.
g) Syrup should be at room temperature before pouring into the syrup bowl.

4.9.5 Maintenance for Hot Beverage Dispensers. Refer to Table 12 for recommended operator and maintenance personnel procedures.

Table 12
Recommended Operator and Maintenance Personnel Procedures for Hot Beverage Dispensers

FREQUENCY	OPERATOR PROCEDURE
D	Clean the exterior of the unit and the drip pan.
W	Flush and sanitize the whipping chamber water tank and dispensing mechanism.
FREQUENCY	**MAINTENANCE PERSONNEL PROCEDURE**
SA	Check operation of whipping motor, metering valve, and heating elements.
A	Check hoses for cracks.
A	Calibrate the thermostat.
A	Inspect the controls.
AR	In hard water areas, delime heating elements.

4.9.6 Troubleshooting for Hot Beverage Dispensers

(a) Syrup drips from dispenser.
  (1) Outlet seat is worn or damaged.
  (2) Inner edge of spout is damaged, preventing seal.
  (3) Plunger is loose, not forming seal.
b) Drink is weak.
  (1) Dried syrup in chamber and/or on plunger.
  (2) Floating washer on plunger not in proper position.
  (3) Plunger stroke too short.

(4) Syrup too hot and thin.
(5) Wrong grade of syrup.
(6) Beverage powder absorbed steam from water tank and will not dispense.

c) Drink too strong.
(1) Plunger stroke too long.
(2) Syrup too cold.
(3) Syrup bowl leaking extra syrup into whipping chamber.

d) Too much water.
(1) Metering valve not set properly.
(2) Vent tube from water measure cover is broken.
(3) Water measure chamber inlet seal leaks.
(4) Top cover of water measure chamber is loose.

e) Not enough water.
(1) Metering valve not open enough.
(2) Obstruction in water line.
(3) Water measure not refilling completely between cycles.
(4) Lime buildup in water measure.
(5) Vent tube stopped up.

g) Water dripping from spout.
(1) Outlet seal does not fit to water measure chamber.
(2) Not enough tension pushing down on outlet seal.
(3) Obstruction or worn outlet seal.

h) Recycling.
(1) Faulty cam switch.
(2) Moisture on relay or switch contactor.
(3) Roller actuator arm on cam switch out of adjustment.
(4) Relay sticks.

i) Dispenser will not cycle.
(1) Control switch defective.
(2) Relay burned out.
(3) Gear motor does not run.
(4) Defective cam switch.

j) Whipper motor does not run.
(1) Defective motor.
(2) Bad wiring and/or connector.

k) Whipper motor slow or sluggish.
(1) Dry or worn shaft seal.

l) Water temperature too hot or too cold.
(1) Wrong thermostat setting.
(2) Thermostat stuck or defective.

m) Water does not heat at all.
(1) Heating element burned out.
(2) Thermostat burned out.
(3) Faulty wiring.

n) Water leak from inside cabinet.
(1) Tubing disconnected or broken.
(2) Tank assembly leaking.

Section 5: COOKING EQUIPMENT

5.1 Scope. This section covers equipment used to heat or cook foods. All pieces of equipment have a method for heating, using electric heating elements, gas burners, or direct connection to the facility steam supply. (The use of central steam requires a separate boiler or generator for sanitary purposes.) Equipment covered includes: ovens, ranges, broilers, griddles, fryers, kettles, and toasters. The bulk of Navy cooking equipment is electric (see para. 8.7 for a separate explanation on electric motors). However, a brief section on gas equipment will be presented in an effort not to repeat it throughout this section. Due to the large number of cooking appliances that use gas, the characteristics, maintenance, and troubleshooting procedures have been consolidated. This handbook is not intended to replace specific manufacturer's guidance (eg. inspecting, testing, lubricating, adjusting, calibrating, etc.) for specific equipment models; rather, it provides a common base for developing a comprehensive activity maintenance program.

5.2 Gas Appliances. Gases used in appliances include natural, manufactured, propane, and butane. Reference manufacturers' literature for the specific gas types, pressures, orifice model/size, and air mixture requirements to achieve proper cooking results. Refer to Figure 8.

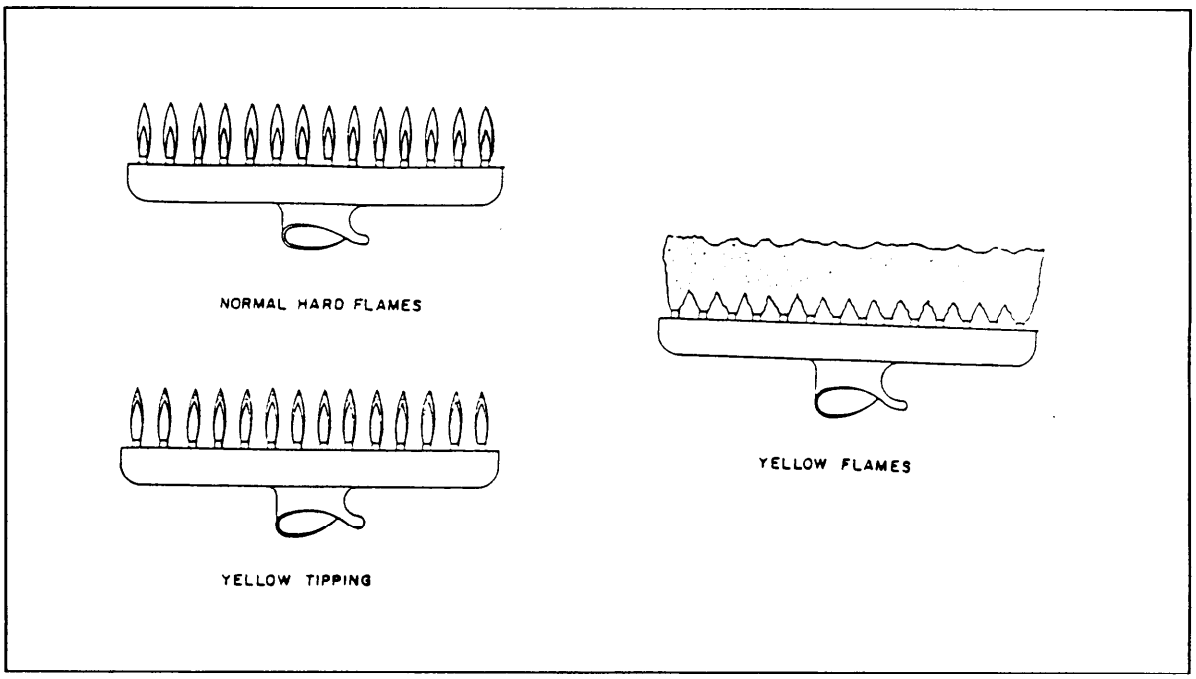

Figure 8
Gas Flames

a) The velocity at which flame travels through an air-gas mixture is the burning speed. Burning speeds vary with gas types and the amounts of air in an air/gas mixture. This air- to- gas ratio (ideally burning at 10:1) is important to flame stability. The flames on a burner will stabilize at a point when the air and gas mixture flow velocity out of a burner equals the burning speed.
b) A typical burner component, the "orifice" or hole, regulates the amount of gas to a burner. Rate depends on the size of the orifice and gas pressure at the inlet of the orifice. The gas flowing from an orifice in the form of a jet sucks air into the burner tube. There are three types of orifices used in cooking equipment. These orifices, each with a definite purpose, are fired, adjustable, and universal.
c) Some burners are furnished with fixed air openings to be used with one specific gas. Most appliance burners, however, use some type of device to adjust air, such as an air shutter, which acts to control the size of air openings to the burner to control air flow. Some models are provided with a blower to force clean air to the burner.
d) A proper flame has an all-blue flame referred to as a "hard flame" that is recommended for cooking appliances. Yellow-tipped flames result from insufficient air, leading to incomplete combustion. Yellow flames also produce soot (carbon), which collects in the flueways and further decreases burner performance.

5.3 Gas Appliance Safety. Gas appliances need to be installed in properly ventilated areas to ensure complete combustion. Also, prior to lighting a gas appliance, check for evidence of raw gas. If present, clear gas before lighting.

5.4 Major Gas Appliance Components. Major gas appliance components are air shutters, blowers, gas burners, ignition system, pressure regulator, solenoid gas valves, and timer and gas control switches.

5.4.1 Maintenance for Gas Appliances. The primary maintenance of gas appliances deals with keeping the unit clean and checking the pilots, ignition, burners, and air adjustments to the burners. Make sure all units are cool to the touch before beginning to work. Refer to Table 13 for recommended operator and maintenance personnel procedures.

Table 13
Recommended Operator and Maintenance Personnel
Procedures for Gas Appliances

FREQUENCY	OPERATOR PROCEDURE
D	Clean the appliance properly.
D	Check burner gas ports and clear of any debris.
W	Brush burner heat reflectors free of any dirt or debris.
FREQUENCY	**MAINTENANCE PERSONNEL PROCEDURE**
M	Check jets for uniform flame; adjust as required.
M	Check gas distribution valves and piping for leaks.
Q	Vacuum around controls.
SA	Check burners, air adjustments, and burner valves. Clean, adjust, and grease valves as necessary.
SA	Check thermocouple; remove grease and carbon.
SA	Clean venturi and air intake.

5.4.2 Troubleshooting for Major Gas Appliance Components

a) Pilot will not light.
   (1) Pilot solenoid valve defective.
   (2) No gas supply.
   (3) Failure of electric or control system.
b) Pilot light will not stay on.
   (1) Defective thermopile.
   (2) Loose electrical leads in unit electric controls.
c) Pilot lit but burner will not light.
   (1) Faulty gas solenoid.
   (2) Faulty control board.
   (3) Low gas pressure.
   (4) Thermostat setting too low.
   (5) Defective thermopile.
   (6) Air shutter closed.
d) Excessive yellow tips of burner flames.
   (1) Accumulation of grease inside the mixer and venturi tube.
   (2) Orifice too large.

e) A "sputtering" or "flashback" of burner flame.
   (1) Low gas pressure. If pressure regulator is not provided, it is recommended that one be installed.
f) Burners throw off.
   (1) Small foreign material in burner.
   (2) Water in gas supply.
g) Burner flame characteristics change, or length of flame is reduced.
   (1) Check for restriction of the burner ports.
   (2) Blockage of the fixed gas orifice.
h) Main burner will not shut off automatically.
   (1) Leaks in main gas valve.
   (2) Thermostat out of calibration or defective.
   (3) Defective main gas valve.
i) Howling or screeching noise when burners are on.
   (1) Gas pressure too high.
   (2) Dirt or burr on burner orifice.

5.5 Ovens

5.5.1 General Description. Ovens cook by surrounding the food with heat, slowly boiling the internal moisture and cooking the food. Ovens heat by convection, radiation, conduction, or some combination of these. Some ovens are directly heated by gas or electricity. Otherwise, they are indirectly fired by gas or oil. Temperatures range from 150 to 550 degrees F. Ovens may be equipped with adjustable racks, revolving trays (ferris wheel type), or conveyors to hold the product(s) being cooked. Some less common types of ovens include:

a) Muffle oven - combination forced air convection and standard oven.
b) Roll-in - designed to hold rolling stock laden with food. This allows high production, ease of loading/unloading, and ease in moving food to serving area.
c) Combi-steamer - allows low pressure steaming and/or cooking.

5.5.2 Major Oven Components. Major oven components are burners, circulating fan and motor (forced air fans), control switch, door, gas jets, heating elements, indicating lights, temperature control, thermostat, and timer.

Convection ovens (specific) components include blower fan and motor, chain and turnbuckle, door-activated blower switch, and shelves (removable).

Revolving ovens (specific) components include hand crank, reversing switch, speed reducer, tray rotation motor, tray indicator, and vent flue damper.

Conveyor ovens (specific) components include the following:

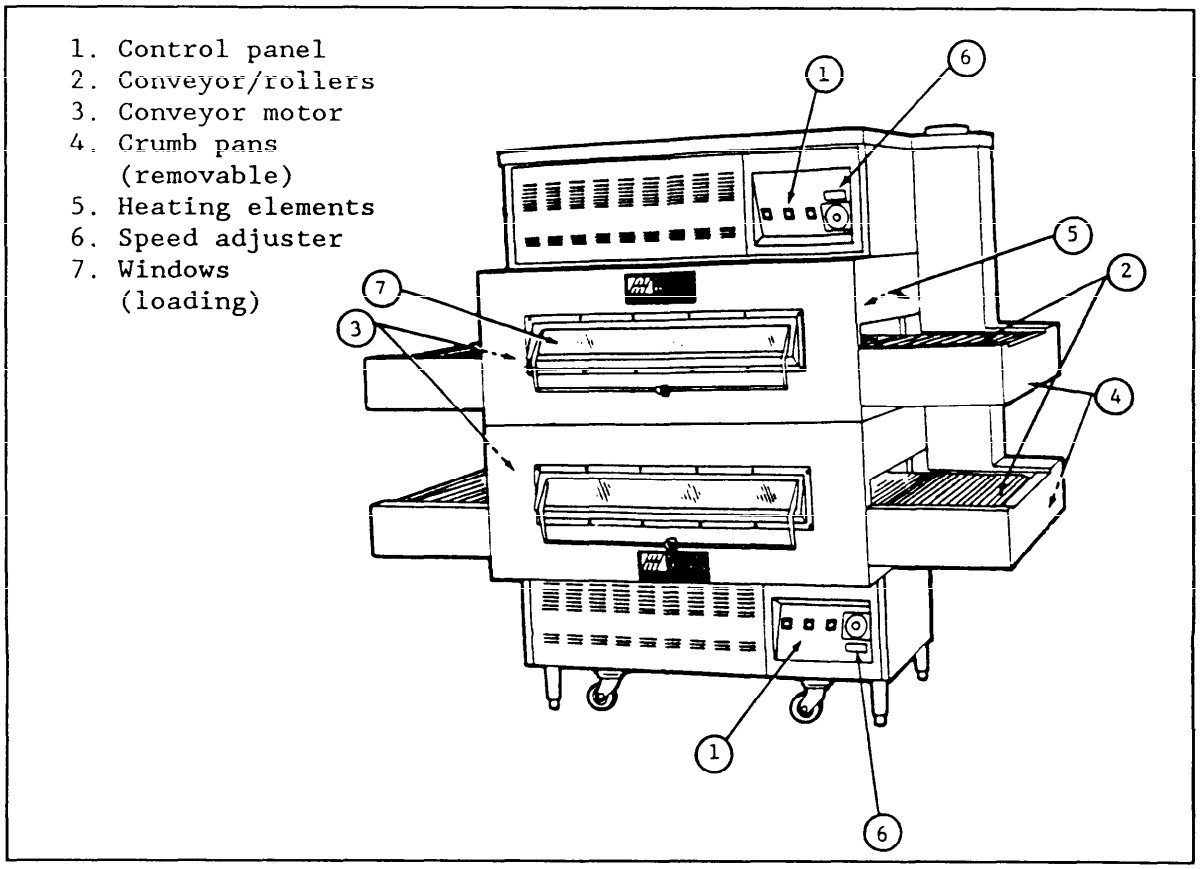

Figure 9
Conveyor Oven

5.5.3 General Operation. Ovens generally operate with dry heat, but some are equipped to use low pressure, saturated steam in baking hearth goods (breads, rolls, etc.). The temperature is monitored by a thermostat which adjusts the electric resistance of heating elements, the amount of gas being burned, or the operation of the oil burner. All ovens also provide radiant heat from hot surfaces, regardless of whether the air is being circulated.

Convection ovens have a blower fan that evenly circulates the air over the heating elements, then around the food. The fan is controlled by the thermostat and/or a control switch wired to the door opening or closing. This prevents the fan from blowing all the hot air out of the oven when the door is opened. These ovens generally have adjustable-height racks that allow air flow through them.

Revolving ovens are very large units similar to a regular convection oven. The product is placed on long trays arranged ferris wheel style. The trays provide conduction heat through direct contact with the product's container. Convection and radiant heat is provided directly with electric heating elements or gas burners in the oven, with fans providing circulation, or indirectly with air passed over elements or gas burners which is then vented into the cooking chamber. Some revolving ovens can change rotary speed by moving the belt to a different pulley. There is also a reversing switch for changing the direction of tray rotation.

Conveyor or roller ovens provide mostly radiant heat, but some also have conductive heat. They are often forced-air convection. The product is placed on the conveyor and is carried over/under the heat elements or gas burners. Similarly, rollers pass the product from roller to roller. Cooking time is determined by temperature and conveyor speed. An automatic steam injection system shall be provided for baking (bakery products) operations.

Deck ovens are most often used for pizzas. Oven cavities are 4 to 15 inches high, depending on purpose, and there are three or four independently operated ovens often stacked vertically. Heat is provided by the hearth using indirect convection heat. In some cases, the upper and lower hearths are independently controlled. Ensure that doors open level with the bottom of the deck.

5.5.4 Operation Hints

a) On side hinged doors, do not force doors open to avoid damaging the hinges.
b) If odors linger in the oven, turn thermostat to about 500 degrees F, and let the empty oven heat for about 30 minutes. See manufacturer's literature for more specific instructions.
c) If applying steam from an external source:
   (1) turn oven about 25 degrees F higher than the desired temperature, as the incoming steam will cause the temperature to drop;
   (2) never open the steam valve wide; and
   (3) keep the incoming steam low pressure (<10 psi) and supersaturated.
d) DO NOT LEAN into (or enter) the oven if the electric power is connected.
e) Keep trays in motion when the oven is on, including preheating. A tray left directly over heating elements may warp.
f) When loading trays, only load those things which clear the loading door and which do not overhang the edge of the trays.
g) If the interior is washed with large quantities of water or steam, DRY OUT THE INTERIOR IMMEDIATELY by bringing the oven to 300 degrees with trays revolving and the loading door open. Leave at 300 degrees F for 1 hour before using or shutting off.

h) Make sure any light bulb replacements match manufacturer's recommended size, wattage, etc.

5.5.5 Troubleshooting for Ovens. Unless otherwise stated in this section, main oven power is on, master switch and circuit breakers are on, and door is closed.

a) No blower or no heat (light or no light in cavity).
   (1) Blower or motor relay is defective.
   (2) Door interlock switch is out of adjustment.
   (3) Switch is defective.
   (4) Fuse blown or circuit breaker tripped.
   (5) Transformer defective.
   (6) No voltage.
b) Blower is on, no heat.
   (1) Thermostat defective.
   (2) Heating elements or connecting leads defective.
   (3) Contactor is defective.
   (4) Circuit breakers are tripped.
   (5) Load control switch is defective.
   (6) Door interlock switch defective.
   (7) Wired improperly.
   (8) Temperature probe defective.
   (9) Thermostat board defective.
   (10) Thermostat potentiometer defective.
c) Oven only heats on one side.
   (1) Heating elements defective.
   (2) Circuit breaker tripped.
d) Motor turns off, and after a few minutes automatically comes back on.
   (1) Motor may be defective.
   (2) Fan shaft or blower wheel is bound up.
   (3) Not properly ventilated.
e) Oven heats up slowly when empty or temperature too low.
   (1) Incoming voltage too low.
   (2) Thermostat out of calibration, or defective.
   (3) Heating elements defective.
   (4) One phase of three-phase supply voltage is out.
   (5) Temperature control board out of calibration or defective.
   (6) Temperature probe defective (if solid state).
   (7) Contactor defective.
f) Oven gets too hot.
   (1) Thermostat out of calibration.
   (2) Thermostat defective.
   (3) Temperature controboard out of calibration.
   (4) Temperature probe defective.
   (5) Contactor defective.
   (6) Defective solenoid valve.

(7) Thermostat potentiometer defective.

g) Timer does not work properly or at all.
   (1) Timer defective.

h) Blower wheel is noisy.
   (1) Motor is too far forward in motor mount and is rubbing on compartment baffle.
   (2) Blower rubbing on front panel.
   (3) Blower is loose on motor shaft.
   (4) Motor shaft is worn.

i) Interior lights do not work.
   (1) No power to oven.
   (2) Circuit breaker is tripped or fuse blown.
   (3) Light switch is not on.
   (4) Light switch is defective.
   (5) Bulb is out.

j) Heater is on, no blower.
   (1) Blower motor is defective.
   (2) Motor speed selector switch is defective.
   (3) Cool down switch not on.
   (4) Cool down switch is defective.

k) Oven temperature does not correspond with thermostat setting.
   (1) Thermostat out of calibration.
   (2) Thermostat is defective.

l) Temperature in oven drops when food is added and does not recuperate.
   (1) Food too moist.
   (2) Too much food added.

5.6 Microwave Ovens

5.6.1 General Description. Microwave ovens differ from conventional ovens in that microwaves do not generate heat, instead they generate high frequency energy waves. These waves are directed to the central cooking cavity of the oven, where they are absorbed and their wave energy is converted into heat. The intense heat that is produced cooks the food from the inside out, so that during this process, the oven remains near room temperature. The microwave oven provides for protection of the microwave energy source(s) from damage caused by excessive reflected microwave radiation(from the cooking cavity) under small or no load conditions. The microwave energy source(s) is also rendered inoperative when the oven door is open. The power supply is protected against overload conditions by fuses or resettable circuit breakers.

5.6.2 Major Microwave Oven Components. Major microwave oven components are control panel, door latch switches, exhaust vents, microprocessor, Rotating mechanism for internal tray, stirrer fan, timer, and thermostat.

5.6.3 General Operation. Microwave ovens are classified according to their cooking power. They vary from about 600 to 2200 Watts (W). Microwave

heating is different from conventional methods in that the heat is generated within the product rather than conducted through the product from an outside source. As the microwave energy cooks the food, the air in the oven cavity warms. To maintain ambient temperature, the stirrer fan circulates and vents the air. Although some microwave ovens have a choice of power levels, many commercial microwave ovens have only one power setting and variable timer.

5.6.4 Operation Hints

a) Never operate a microwave oven if it is empty or if the door is open.
b) Ensure that food containers transmit microwaves. These materials include glass, plastic, porcelain, china, wood, wicker, and paper.
c) Do not use metal (including plates, foil, metal ties) in a microwave unless specifically outlined in the technical document.
d) Do not heat closed items (e.g., eggs, jars with lids). Allow air to escape.
e) Do not use recycled paper products; these may contain impurities which could catch fire.
f) Do not use scouring powders or pads, or other abrasive material in cleaning microwave ovens.

5.6.5 Maintenance for Microwave Ovens. Refer to Table 14 for operator and maintenance personnel procedures.

Table 14
Recommended Operator and Maintenance Personnel
Procedures for Microwave Ovens

FREQUENCY	OPERATOR PROCEDURE
D/AR	Wipe up spills as they happen with damp cloth and paper towel.
D	Clean fan cover, inner door, door gasket, and oven cavity.
W	Clean air filter and exhaust holes.
FREQUENCY	**MAINTENANCE PERSONNEL PROCEDURE**
W	Visually check door seal, door hinge, and interlock switch.
SA/AR	Perform radio frequency leakage test.
SA	Lubricate blower motor.

5.6.6 Troubleshooting for Microwave Ovens

a) Breaker trips or fuse blows when oven is plugged in.
   (1) Shorted or damaged rear cover switch.
   (2) Shorted or damaged ON-OFF switch.
   (3) Shorted or damaged timer power interlock.
   (4) Shorted or damaged power cord.
b) Oven will not operate when turned on.
   (1) Blown fuse or tripped breaker.
   (2) Oven door is loose and cover safety switches not actuated.
c) Blower does not operate.
   (1) Defective blower motor.
   (2) Open wiring in circuit to blower.
d) Stirrer does not operate and oven does not heat.
   (1) Door switch out of adjustment or defective.
   (2) Defective cook relay.
   (3) Defective stirrer motor.

5.7 Steamers

5.7.1 General Description. Steamers cook food with either the use of pressurized steam (5 to 15 psi), or in convection steamers with no pressure, using only the moist heat of the steam. Cooking temperatures vary from 212 degrees F (steam at zero pressure) to 300 degrees F for pressurized steam. Steamers may be counter mounted or free standing. Units are equipped with temperature and pressure regulating devices to regulate cooking and to protect personnel. The steamer may be directly connected to building steam, or steam may be generated by a gas or 120/220 V electric boiler or generator in the unit.

5.7.2 Major Steamer Components. Major steamer components include control switch, convection fan and motor, descaler, door interlock switch, drain, heating elements, pressure gauge, safety valve, steam trap, steam solenoid valve, temperature control, and timer.

5.7.3 General Operation. Pressurized steamers, referred to as bulk type, cook larger quantities at lower pressures (5 psi). Smaller units that are intended for faster food preparation operate at higher pressure (15 psi). The pressurized units are sealed, and the door is locked during the cooking cycle. The doors on non-pressurized convection steamers may be opened any time during the cooking cycle.

5.7.4 Operation Hints

a) When doing any maintenance on the steam boiler or generator, do the work while it is not pressurized or hot. Be sure the power and utilities are shut off before starting any work.

b) The steam boiler or generator is provided with one, sometimes two, corrosion protectors and descalers. Check the boiler thoroughly at regular intervals depending upon hardness of the water and the amount of use. Check or replace the descaler and check and clean the generator shell internally according to the following steps:
   (1) Blow down the boiler according to the manufacturer's recommendations.
   (2) Remove the descaler and clean off the scale. If scaling is heavy or pitting has begun, replace the descaler. Scaling indicates a very hard water condition. Pitting indicates an excess acid condition.
   (3) To clean the interior of the boiler, wire brushes may be used to remove scale.
   (4) If a de-liming agent is used to dissolve any scale buildup, take great caution to avoid damage to brass and copper parts of boiler controls.
   (5) It is recommended that the boiler be removed if a solvent is to be used in cleaning the interior.
   (6) Clean the hand hole cover plate every time it is removed and replace it, if it is chipped or cracked.
   (7) Replace the hand hole cover gasket if it is cracked or hardened.

c) Immediately stop any leaks around the boiler or generator hand hole plate. Small leaks, if unchecked, cause corrosion and pitting of the boiler face around the hand hole gasket and in the hand hole plate gasket groove, making both unsealable.

d) Ensure that repairs to the steam boiler or generator conform to the applicable provisions in the ASME Code or the National Board of Rules for Repairs. It is recommended that a certified boiler inspector review the work before putting the system back in operation.

e) Steamers utilizing gas heat may burn natural, propane, or butane gas. If gas types are changed, check the manufacturer's literature for necessary adjustments to the orifice size, air shutters, and pressure regulator.

5.7.5 Maintenance for Steamers. In doing any maintenance on the steam boiler or generator, ensure that the work is done while it is not pressurized or hot. Be sure the power and utilities are shut off before starting any work. Refer to Table 15 for recommended operator and maintenance personnel procedures. See para. 5.4.1 for gas appliance maintenance.

Table 15
Recommended Operator and Maintenance
Personnel Procedures for Steamers

FREQUENCY	OPERATOR PROCEDURE
D	Clean cooking compartment.
D	Drain boiler or generator.
D	Check water level in sight glass.
W	Check safety valves for all compartments and clear any deposits in the valve.
FREQUENCY	**MAINTENANCE PERSONNEL PROCEDURE**
M	Visually inspect door hinges, latches, and/or wheels. Lubricate as necessary.
M	Inspect pressure relief valve.
Q	Check operation of low water fuel cut-off system.
SA	Inspect and clean steam strainer.
SA	Check working pressure on steam gauge.
SA	Clean and check heating element on electric unit.
A	Inspect inside of steam boiler or generator.
SA	Check timer mechanism for proper operation.
A	Clean interior shell, descale and check for damage. If descaler has shrunk to 1/2 original size, replace.
A	Clean and examine boiler hand hole plate.
A	Clean steam trap seat and gasket, and flush the trap with water on steam units.

5.7.6 Troubleshooting for Steamers. See para. 5.4.2 for gas appliance troubleshooting.

a) Steam boiler or generator will not heat.
   (1) Check for electric power to controls.
   (2) Malfunction of pressure switch.
   (3) level low; low water fuel cut-off switch is open.
   (4) Malfunction of low water fuel cut-off unit.
b) Condensed steam (water) accumulates in compartment and does not properly drain.

(1) Exhaust system or its control has malfunction.
(2) Steamer is not level.
(3) Drain is clogged.

c) Safety relief valve leaks steam or opens frequently.
(1) Defective safety relief valve.
(2) Manual trip mechanism caught or bound holding valve open.
(3) Dirt under the safety relief valve disk.
(4) Steam pressure too high.

d) Steam enters compartment and continues to escape from compartment through automatic air vent (trap) or through the compartment exhaust valve.
(1) Automatic air vent (trap) malfunction. Check exhaust valve and thermostatic operator or trap.
(2) Compartment exhaust valve not closing properly.

e) Pressure cooking mode fails to operate.
(1) Defective timer motor or contact.
(2) Defective steam exhaust solenoid valve.

f) Pressureless cooking mode fails to stop.
(1) Defective timer motor or contact.
(2) Defective push-button timer or transformer.
(3) Defective steam inlet valve.

g) Steam fails to enter compartment in either cooking mode (with indicator light On).
(1) Compartment door not closed.
(2) No steam entering steam line.
(3) Faulty door interlock switch.
(4) Faulty inlet solenoid valve.

h) Steam enters compartment continuously. Timer dial not turning.
(1) Faulty thermostatic switch.
(2) Faulty timer motor.
(3) Faulty steam solenoid valve.
(4) Faulty selector switch.
(5) Faulty wiring.

i) No steam pressure gauge reading in pressure cooking mode (with indicator light On).
(1) Insufficient steam input from steam generator.
(2) Faulty pressure gauge.
(3) Faulty steam exhaust solenoid valve.
(4) Faulty relief valve.

j) In pressure cooking mode, cooking compartment fails to reach cooking temperature.
(1) Air in cooking compartment.
(2) Low steam pressure.

k) In pressure cooking mode, activating safety valve knob fails to cause pressure drop.
(1) Valve knob cable disengaged.
(2) Defective relief valve.

c) Oven only heats on one side

1) Steam flows continuously from boiler (or direct connected steam control) drain line with cooker in operation.
   (1) Cold water not connected.
   (2) Faulty condenser thermostat.
   (3) Faulty cold water solenoid.
   (4) Faulty wiring.

5.8 Broilers

5.8.1 General Description. Broiling is either cooking in an enclosed area with heating elements above, only; or cooking directly on a heated surface (i.e., char-broiling). Broilers can be either gas or electrically heated. They come in a variety of models such as hot dog broiler, salamander (mounted above a range), conveyor, and char-broiler. The operating temperature can get as high as 600 degrees F; but they normally operate in the 325 to 425 degrees F range.

5.8.2 Major Broiler Components. Refer to Figure 10 for a generic list of major broiler components segregated into gas and electric heating sources. (Figure 10 is an electric broiler.)

5.8.3 General Operation for Broilers

a) Gas. Gas broilers and char-broilers are available in conventional and infra-red models. Conventional broilers produce heat which rises. Infra-red gas broilers cook by transmitting long energy waves that are more easily absorbed than usual short waves. The gas combustion causes the burner surface to super-heat and produce a radiant glow, which generates cooking heat (energy waves) from the burner's surface. Infra-red broilers are faster and may reduce cooking time by as much as half.
b) Electric. Resistance heat is generated from a heating element located below the cooking surface of a char-broiler or mounted in the top of an enclosed broiler. This equipment comes in models using 208 volts with a varying number of independent heat elements. These independent heating elements permit temperature settings to vary across the broiler for different uses as well as isolation of smaller cooking requirements. Heat adjustments within the broiler are achieved by regulating the voltage using the control switch.

5.8.4 Operation Hints for Broilers. On gas broilers, monitor the flame characteristics to ensure peak performance (refer to manufacturers' literature). Install a gas pressure regulator to maintain consistent broiler performance. When relighting a gas pilot, observe a short (5 minute) shut-off period before relighting.

		Gas	Electric
	Air filter	x	
	Blower and motor	x	x
	Burner valve	x	
	Chains and counter weights (conveyor type)	x	x
1.	Controls	x	x
2.	Grease pans	x	x
	Heating elements		x
	Infinite switch		x
	Pilot assembly/ignitors	x	
3.	Radiants	x	x
	Reflector	x	x
	Thermostat	x	x
4.	Timer	x	x
5.	Windows	x	x

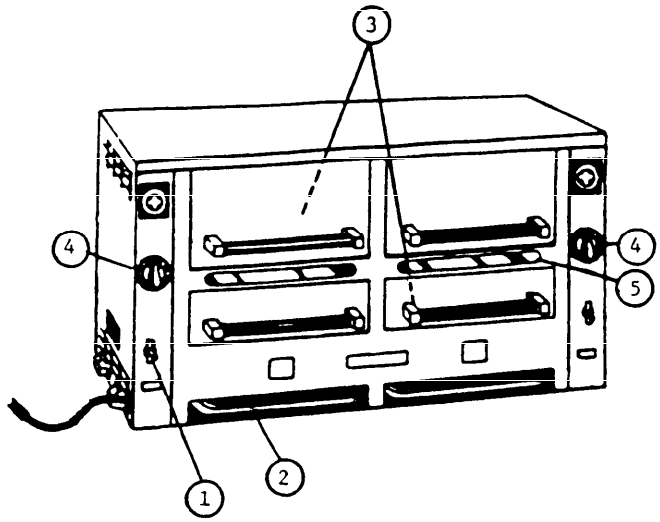

Figure 10
Major Broiler Components

The successful operation of gas-type char-broilers stems from keeping the burner adjusted and the port clear. An enclosed gas broiler requires keeping the unit clean and checking pilots, ignition, burners, and air adjustment to the burners. Broilers provided with blowers demand that blowers be kept clean. The motor is self-lubricated and requires no routine maintenance.

5.8.5 Maintenance for Broilers. Refer to Table 16 for recommended operator and maintenance personnel procedures. See para. 5.4.1 for gas appliance maintenance.

Table 16
Recommended Operator and Maintenance Personnel Procedures for Broilers

FREQUENCY	OPERATOR PROCEDURE
D	Clean the grate, grate carriage, carriage mechanism, radiant, and interior of the broiler chamber.
FREQUENCY	**MAINTENANCE PERSONNEL PROCEDURE**
Q	Check operation of broiler arm, move it up and down, and adjust it as required.
Q	Check and change air filter as required.
SA	Check doors for warping, alignment, and seals.
SA	Check electrical connections and wiring for defects; tighten loose connections.
SA	Tighten and replace any loose nuts, bolts, or screws.
SA	Check calibration of thermostat.
SA	Check operation of chain and counter weights (conveyor type).
A	Check electric motor, controls, and wire connection (hot dog type).
A	Clean contacts (hot dog type).
A	Inspect shelves for defects and level if required.
A	Lubricate bushing (hot dog type).

5.8.6 Troubleshooting for Boilers. See para. 5.4.2 for gas appliance troubleshooting.

a) The broiler elements do not get hot enough.
   (1) Low supply voltage.
   (2) Partially defective or wrong elements.
   (3) Improper wiring.
b) There is no heat in the broiler.
   (1) Check the main supply voltage or the broiler's circuit breakers.
c) Only front elements heat up. No heat in the back section.
   (1) Defective contactor or a possible bad connection to the contactor coil.
   (2) Check for bad connection on the supply voltage.
   (3) Check for defective breaker.
   (4) The switch may be defective.
d) No heat at all.
   (1) Check voltage on the terminal block.
   (2) Check bad connections to the breaker.
   (3) Check for defective breaker or tripped breakers.
e) One element does not get hot, but other elements heat up.
   (1) a bad connector or a broken wire.
   (2) defective switch.
   (3) element is defective.
f) The elements cannot be controlled and overheat.
   (1) Possible short within the element or the supply leads.
   (2) The infinite switch is defective and must be replaced.
g) The circuit breakers (in the broiler or outside main breaker) keep tripping OFF.
   (1) Broiler short circuit.
   (2) Possible overload, compare the supply voltage to the broiler rating.

5.9 Griddles

5.9.1 General Description. A griddle is a flat top appliance heated from beneath. Griddles can be designed for counter top use, stand mounting, or dresser mounting. Griddles range in size from 36 x 38 inches to over 5 feet long. The flat plate is at least 7/16 inch thick stainless steel and can be heated to 450 degrees F.

5.9.2 Major Griddle Components. Major griddle components include the gas or heating source, heating elements, and the components shown in Figure 11.

5.9.3 General Operation for Griddles. The griddle plate can be heated by either gas flames or electric heating elements. The griddle heats to slightly above the desired temperature and then shuts off. As the griddle cools to below the desired temperature, the heating elements cut back on. This cycle keeps the griddle at a constant temperature.

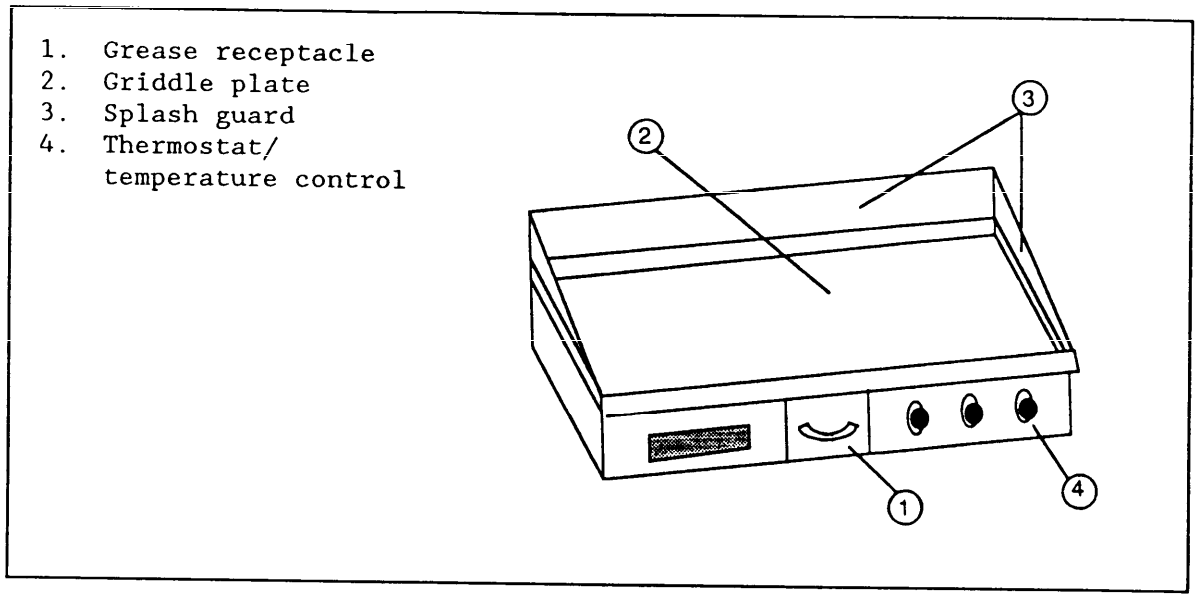

Figure 11
Major Griddle Components

5.9.4 Operation Hints for Griddles

a) Allow the griddle to fully cool before cleaning. After cleaning, always re-season.
b) Never submerge the griddle in water unless heating elements can be detached.
c) Do not allow the griddle to stand unused at high temperature for long periods. It could cause warping.
d) Clean the griddle with non-abrasive material.

5.9.5 Maintenance for Griddles. Refer to Table 17 for recommended operator and maintenance personnel procedures.

5.9.6 Troubleshooting for Griddles

a) Griddle will not heat.
   (1) Defective heating element.
   (2) Short circuit.
   (3) Defective thermostat.
b) Griddle overheats.
   (1) Defective thermostat.
   (2) Defective controller.
   (3) Poor connection to controller.

Table 17
Recommended Operator and Maintenance Personnel
Procedures for Griddles

FREQUENCY	OPERATOR PROCEDURE
EU	Clean splash guards; clean grease catch.
EU	Re-season after cleaning.
W	Thoroughly clean grill surface.
FREQUENCY	**MAINTENANCE PERSONNEL PROCEDURE**
Q	On gas-operated units, check pilot and adjust if required. Check gas burners for uniform flame.
SA	Check thermostat. Recalibrate if necessary.
A	Tighten or replace any loose nuts, bolts, or screws.
A	On electrically operated units, check connections and wiring.
A	Check power plug for loose wires. Tighten as required.

5.10 Fryers

5.10.1 Description. Fryers cook foods by immersion in hot oil or fat. Tanks varying in size from 15 to 60 gallons capacity are filled with fat or oil and the food product is lowered into the hot liquid in wire baskets. Fryers come in a variety of types with electric or gas heating sources and in pressurized and non-pressurized models. The oil temperature is thermostatically controlled with an upward operating temperature of 400 degrees F. Gas fryers are also equipped with a second or over temperature thermostat (in the temperature control system) to shut off the entire gas system when the fat temperature reaches a high limit of 475 degrees F.

5.10.2 Major Fryer Components. Major fryer components include a high level thermostat, safety relief valve motor (pressure fryers only), thermopile, and the components shown on Figure 12.

5.10.3 General Operation for Fryers. Fryers are equipped with a removable cover with handle suitable for covering the cooking vessel. Some models have a removable fat container, while other units are provided with a drain valve.

Electric fryers heat fat with heating elements located in the fat container. On most models, the heating elements are self-cleaning. Most fryers are furnished with a high limit thermostat to provide complete power shut-off to the fryer if the fat reaches too high a temperature.

1. Back splash guard
2. Basket
3. Control switch
4. Heating elements/ gas burners
5. Indicator lights
6. Tank
7. Thermostat/ temperature control

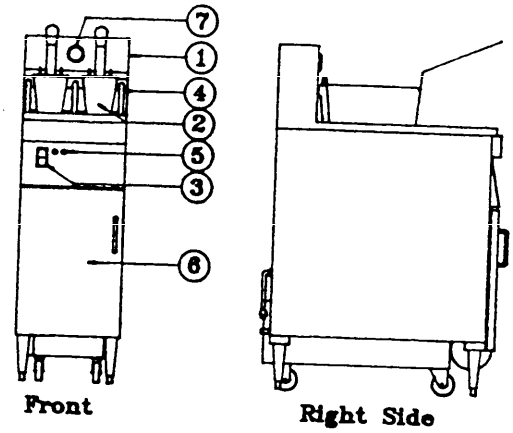

Figure 12
Major Fryer Components

The gas fryer is heated by various types of burners. Some models use infra-red burners located on the side of the fat container, while on others, the burners are located on the bottom of the container. Some models of gas fryers are provided with electrically operated controls requiring a separate 120-volt service to the unit. Gas fryers have an automatic pilot device, including a 100 percent shutoff. Gas fryers are also equipped with a pressure regulator for natural gas and a quick disconnect.

The pressure fryer is available with gas or electric heating systems. In this type of unit, the product is fried in cooking oil under pressure by sealing a cover over the frying pot. This type of unit is normally provided with a filtering system.

Frying baskets that are automatically raised and lowered are attached to a holding device above the frying vat. This holder is raised and lowered by a cam controlled by a timer set for the cooking duration.

5.10.4 Operation Hints for Fryers

a) Do not install fryers within 6 inches of any combustible material.
b) Do not operate new fryer until it has been thoroughly cleaned and dried and the thermostat has been tested for proper calibration.

c) Do not operate fryer unless the heating elements are completely immersed in cooking oil to prevent potential damage to the element. Also ensure the temperature control switch is off before draining a fryer tank.
d) Use of solid fat is not recommended. Do not put solid fat in the tank such that all heated surfaces of the heating element are in contact with the fat; thus causing hot spots on the element sheath resulting in momentary overheating of the fat and premature fat breakdown.
e) When servicing the unit, be sure the electric power is disconnected and the pilot light/gas is off. Drain the fry tank and clean the elements of surplus fat.
f) Keep the cover on pressurized fryers open when draining the frying pot. This eliminates the possibility of draining frying pot under pressure.
g) Before filling with oil, always be sure fryer tank is wiped dry after cleaning.
h) Keep drain pail or filter under frying pot at all times to prevent accidental draining on the floor.
i) Do not boil water in fryer tank.
j) Do not use soap, detergent, or caustics when cleaning the frying pot or cover.
k) In the event of excess temperature or smoking of the cooking oil, close and lock the cover and turn off the main electric and/or gas power supply.
l) On pressurized fryers, be sure pressure gauge reads "0" (zero) before opening fryer tank cover.
m) Filter fat frequently (at least daily), especially when frying breaded foods.
n) Keep salt out of fat.
o) Maintain fat at proper level.
p) Always add at least 15% fresh fat daily.
q) Do not overload baskets.
r) Keep exterior of tank clean. Accumulated grease and fat spills can cause fryer malfunction.
s) When fryer is not in use, or is unattended for an extended period of time, turn line disconnect switch or circuit breaker to off or unplug machine. Cover if fat is left in the tank.
t) Check the millivolt (mV) system in gas fryers with electric controls. Check manufacturer's literature for directions on this procedure. The minimum acceptable output is 325 mV, with usual voltage between 400 and 500 mV. If mV generation is low, adjust one of the following: pilot flame to encircle 1/2 inch of the tip of the thermopile, high limit control, or electrical points.

5.10.5 Maintenance for Fryers. Refer to Table 18 for recommended operator and maintenance personnel procedures.

Table 18
Recommended Operator and Maintenance Personnel Procedures for Fryers

FREQUENCY	OPERATOR PROCEDURE
D	Clean machine thoroughly of dust, grease, and food particles.
D	Filter oil.
W	Check pilot light on gas-operated fryers.
FREQUENCY	**MAINTENANCE PERSONNEL PROCEDURE**
Q	Check motor for excessive noise and overheating.
Q	Check basket or rack for bends or defects. Straighten bends when necessary.
Q	Inspect insulation for leakage of fat.
Q	Test fryer temperature control unit.
Q	Check thermostats; calibrate if necessary. Include testing of safety thermostat.
SA	Examine gas unit compartments, valves, and piping for leaks; tighten.
SA	Check cooking oil filter on circulating system; change as required.
A	Check elements, switches, controls, contacts, and wiring on electrically heated units.

5.10.6 Troubleshooting for Fryers. See para. 5.4.2 for troubleshooting gas heating sources.

a) Fryer cycles properly but does not reach dial temperature.
   (1) Not calibrated properly.
   (2) Temperature probe is defective or poorly mounted.
b) Excess fat foaming.
   (1) Food wet, improperly drained.
   (2) Soap or dirt in frying container.
   (3) Fat breakdown from overheating or contamination.
   (4) Fat too old or wrong type.
c) Thermostat does not call for heat.
   (1) Lead wires damaged.
   (2) Thermostat set too low.
   (3) Thermostat out of calibration.
   (4) Thermostat defective.

d) Fryer operates in either "fry" or "melt" mode but will not operate in the other mode(s).
   (1) Defective melt/fry switch.
   (2) Defective temperature probe.
   (3) Defective temperature potentiometer.
   (4) Defective control board.
   (5) Loose wire or connection.
e) Fryer recovery too low.
   (1) Too much food.
   (2) Thermostat calibration.
   (3) Low voltage.
f) Hi-limit indicator tripped.
   (1) Thermostat defective.
   (2) Hi-limit indicator or control defective.
   (3) Automatic gas valve defective.
   (4) In-line connector unplugged.
   (5) Hi-limit adapter defective.
g) Hi-limit indicator light on.
   (1) Pilot generator cartridge defective.
   (2) Pressure switch defective.
   (3) Thermocouple loose at valve connection.
   (4) Valve pilot magnet defective.
h) Operating indicator lights are out.
   (1) Wire leads are loose or disconnected.
   (2) Unit cord set unplugged.
   (3) Bulbs burned out.
   (4) Blinker circuit assembly defective.
   (5) High limit control tripped.
i) Timer will not run.
   (1) Power off.
   (2) Timer defective.
   (3) Loose wire.
   (4) High limit control tripped.
   (5) Fuse blown.
j) Exhaust valve will not close (pressure fryer only).
   (1) Power off.
   (2) Loose wire.
   (3) Valve is defective.
   (4) Timer is defective.
   (5) High limit control tripped.
k) High limit control will not reset.
   (1) Cooking oil temperature is too high. Allow to cool to below 360 degrees F.
   (2) Control is defective.
   (3) Insufficient amount of fat in fryer.
l) Loss of pressure (pressure fryer only).
   (1) Exhaust valve open; check electric circuit.

(2) Leaks around cover O-ring or gasket; check cover alignment and O-ring or gasket.
(3) Loose line fitting.
(4) Defective safety valve.
(5) Defective pressure gauge.
(6) Low temperature; check calibration.

5.11 Steam-Jacketed Kettles

5.11.1 General Description. Kettles are cooking vessels in which the internal cooking surface is encased by a sealed water chamber. When heated, steam is created in the water chamber or jacket. Such steam-jacketed kettles may be electrically or gas heated, or may be directly connected to a central steam source. Steam-jacketed kettles may be fixed or mechanically tilted, and may be a floor model or table mounted. They range in size from 5 to 100 gallons. Normal operating temperatures range from room temperature to 300 degrees F. In some models, water may be added to the water/steam jacket; in other models, the jacket is sealed at the factory. Steam-jacketed kettles are provided with an attached pressure-type, brass safety valve. The valve has a reversible lifting lever and can be rotated 360 degrees F without disturbing the valve setting. It is connected to the steam-jacket (through bottom inlet) and has a side discharge. Check the manufacturer's manual or specification for the particulars of each make and model.

5.11.2 Major Kettle Components. Table 19 shows a matrix of major kettle components according to heat-source type. (Some components may vary from manufacturer to manufacturer.)

5.11.3 General Operation for Kettles

a) Electric. The electric kettle has the steam jacket heated by an electric element, and in most models is a sealed unit. The thermostat (rheostat type) is set to the desired cooking temperature,and the contents of the kettle are brought to the set temperature for cooking.
b) Gas. The gas kettle has the steam jacket heated by a gas burner that is ignited either by a gas pilot light or an automatic gas ignition system. Adjustment of the flame heat may be made with the burner valve or automatic flame igniter. This model kettle requires more operator attention than the electrically heated kettle.
c) Steam. The kettle heated by installation-controlled steam requires increased operator attention over the electric or gas models. Control steam temperatures and pressure source, as well as temperature and pressure within the kettle. To control the temperature, this is done with the operation of manually operated valves or solenoid-controlled valves.

Table 19
Major Kettle Components

	ELECTRIC	GAS	STEAM
Air eliminator valve	x	x	x
Cover	x	x	x
Drain/draw-off tube	x	x	x
Drain valve	x	x	x
Gas burner		x	
Heat/temperature control	x	x	x
Heating element(s)	x		
Low water cutoff control	x		
Pilot light/auto ignition		x	
Power switch	x		
Pressure gauge	x	x	x
Pressure gauge (on/in the line)			x
Pressure limit control	x	x	x
Pressure relief valve	x	x	x
Steam trap			x
Strainer	x	x	x
Swing spout	x	x	x
Tilting mechanism	AR	AR	AR
Vent	x	x	x
Water level indicator	x	x	x

5.11.4 Operation Hints for Kettles. The kettle is most effective when piping is free of sludge and scale. If evidence of scaling or sludge buildup is apparent, drain and flush the water chamber. It is recommended that the water be heated by adding boiler feed water chemicals or other treatments based on the manufacturer's recommendations. Do not tamper with or obstruct the safety valve. Refer to the manufacturer's manual for the particulars of each make and model.

5.11.5 Maintenance for Kettles. Refer to Table 20 for recommended operator and maintenance personnel procedures. See para. 5.4.1 for gas appliance maintenance.

5.11.6 Troubleshooting for Steam-Jacketed Kettles. The following is a listing of potential problems and possible causes/solutions. For additional information, refer to the equipment service manual.

Table 20
Recommended Operator and Maintenance Personnel Procedures for Kettles

FREQUENCY	OPERATOR PROCEDURE
D	Clean kettle inside and out. Be sure not to get water into control housing.
D	Trip the safety relief valve when heating to release air trapped in the jacket.
D	Disassemble drain valve and drain line and clean per manufacturer's instructions.
FREQUENCY	**MAINTENANCE PERSONNEL PROCEDURE**
M	On direct-connected steam units, clean the screen in the strainer, steam trap, and vent.
SA	Check for loose electrical connections.
SA	Grease tilting gear mechanism and trunnion bearings on tilting kettles.
SA	On thermostatically controlled kettles, check the solenoid valve and remove foreign material between seat and disc.
SA	Check for proper operation of steam supply line safety relief valve, pressure gauge, and drain (off) valve.
SA	Inspect door gasket; clean exhaust silencer. Perform operational test.
A	Make sure O-rings and seals are intact, replace if worn or broken.
A	Check operation of electric water valve.
A	Inspect hinges on lid; lubricate as required.
A	Remove seat and seat gasket of steam trap and clean.
A	Remove cleanout plug of steam trap (bucket-type) and flush out with water.

a) Kettle will not boil water when thermostat is set on high.
   (1) Air in water reservoir--vent air through relief valve.
   (2) Relief valve faulty.
   (3) Heating elements burned out.
   (4) Contactor or thermostat faulty.

b) Relief valve opens repeatedly.
   (1) Air in kettle reservoir.
   (2) Relief valve faulty.
   (3) Thermostat defective.
c) "WATER REQUIRED" light on.
   (1) Not enough water in reservoir.
   (2) Level control indicator defective.
   (3) Water level probe defective.
   (4) Wiring faulty.
d) Kettle hard to tilt.
   (1) Bearings loose or need lubrication.
e) Indicator light does not come on when switch is on; thermostat dial is set.
   (1) No power to the kettle.
   (2) Kettle is not in full upright position.
   (3) Indicator light burned out.
   (4) On/off switch defective.
   (5) Thermostat defective.
   (6) Not enough water in kettle reservoir - see if "WATER REQUIRED" light is on.
   (7) Faulty tilt interlock switch.
   (8) Faulty time delay.
   (9) Faulty level control.
   (10) Faulty wiring.

5.12 Tilting Skillet

5.12.1 General Description. Tilting skillets are large frying pans with deep sides and an attached lid. They are used to grill, fry, simmer, and braise large quantities of food. They can be mounted on a wall or on a stand and can be tilted at least 90 degrees from the normal horizontal position for emptying cooked foods and cleaning. Skillets are either gas or electric, have an electric thermostat, and have a temperature range of 100 to 450 degrees F. There is also a secondary thermostat which is a high limit cutoff that disables the power circuit when the temperature exceeds 460 degrees F. Gas skillets are also furnished with a pressure regulator, connector, quick-disconnect, and a 100 percent shutoff device for the pilot (automatic ignition of gas). Most skillets will also have a faucet directly attached to the skillet to aid in cooking and cleaning.

5.12.2 Major Tilting Skillet Components. Major tilting skillet components are control system, cover (hinged), heating elements or burners, high limit cutoff, thermostat, and tilt mechanism.

5.12.3 General Operation. The skillet is heated from the bottom by either resistant heating elements or a series of gas burners. Usually, the tilting mechanism can be locked in any position. On some models, the tilting feature may have a safety switch to be engaged if the skillet is hot or on. If the

skillet is provided with a faucet, it may be connected directly to building water supply.

5.12.4 Operation Hints

a) Keep the tilting mechanism thoroughly lubricated for ease of operation.
b) Always turn off the heating element before tilting.

5.12.5 Maintenance. Refer to Table 21 for recommended operator and maintenance personnel procedures. See para. 5.4.1 for gas appliance maintenance.

Table 21
Recommended Operator and Maintenance Personnel Procedures for Skillets

FREQUENCY	OPERATOR PROCEDURE
EU	Clean skillet thoroughly inside and outside after each use following manufacturer's recommendation.
FREQUENCY	**MAINTENANCE PERSONNEL PROCEDURE**
SA	Check operation of stop and reverse switch.
SA	Check timer mechanism and operation.
SA	Calibrate thermostat.
SA	Turn motor on and check operation of chain drive mechanism; lubricate chain.
A	Inspect motor and wiring. Inspect motor and bearings for overheating; lubricate motor bearings.
A	Check V-belt; adjust tension and/or pulley as required.
A	Check lubricant in gear case; add as required.
AR	Check tilt mechanism for smooth operation. Oil as required by manufacturer.
AR	Oil hinges on lid.

5.12.6 Troubleshooting for Tilting Skillet. See para. 5.4.2 for gas appliance troubleshooting.

a) Heat uneven over the pan surface.
(1) Thermostat defective or out of calibration.

(2) Faulty heating element.
(3) Faulty contactor.
(4) Faulty wiring.

b) Unit fails to heat.
(1) Faulty contactor.
(2) Malfunction of interlock switch.

c) Pan fails to heat, pilot light out, power switch on, thermostat set.
(1) Power to unit is off.
(2) Faulty power switch.
(3) Faulty control thermostat contacts.
(4) Faulty high limit thermostat.

d) Tilting mechanism will not work.
(1) Gears require lubricants.
(2) Belt loose or broken.
(3) Skillet overloaded.
(4) Faulty wiring.

5.13 Ranges

5.13.1 General Description. The cooking surfaces of a range are available in a number of different configurations. Typical surfaces available include burner, round calrod hotplate, uniform or graduated hot top, and fry top or griddle. Ranges may be either gas or electric and are available with or without an oven base. Refer to para. 5.5 for operation and maintenance of an oven.

5.13.2 Major Range Components. Major range components include drip pan, heating elements, temperature control, and components from Ovens (see para. 5.5.2) and Boilers (see para 5.8.2). (Refer to Figure 13 and Table 22.)

5.13.3 General Operation. The operation of a range is dependent on the individual parts (oven, griddle, broiler). Refer to the applicable sections.

5.13.4 Operation Hints

a) If spills have hardened on a hotplate, remove with a scraper, then clean with a damp cloth.
b) Grease sticky knobs with high temperature gas valve lubricant.
c) Never submerge or dip burner into water.

5.13.5 Maintenance. The following are recommended operator and maintenance personnel procedures. Also refer to maintenance sections on the individual range parts (oven, griddle, broiler). See para. 5.4.1 for gas appliance maintenance.

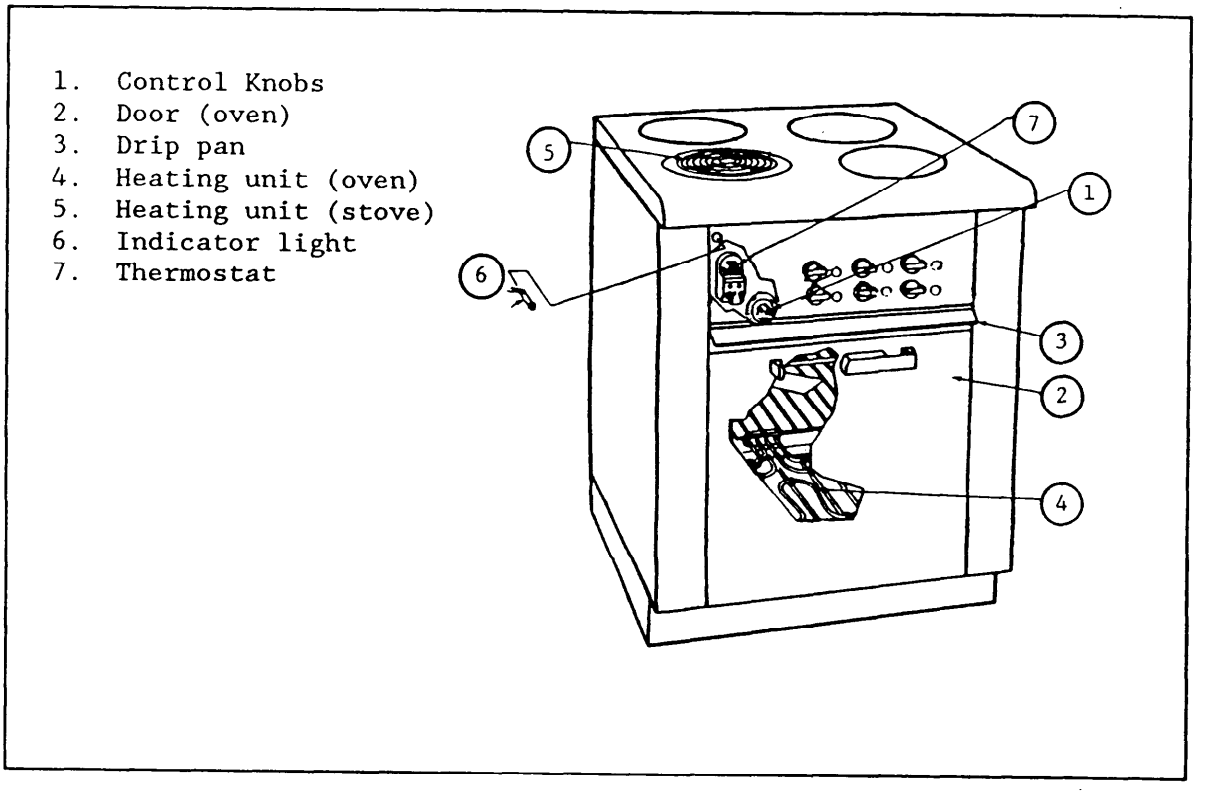

Figure 13
Major Range Components

Table 22
Recommended Operator and Maintenance Personnel
Procedures for Ranges

FREQUENCY	OPERATOR PROCEDURE
D	Remove top sections of range and clean burner box.
AR	Clean the blower wheel.
W	Clean surface with griddle stone (if range has a griddle).
FREQUENCY	**MAINTENANCE PERSONNEL PROCEDURE**
SA	Check thermostats. Recalibrate if necessary.
SA	Check for loose wire connections.

5.13.6 Troubleshooting for Ranges. See paras. 5.5 and 5.8, respectively, for troubleshooting oven or broiler components.

a) Cooking element is not working.
   (1) The switch is defective.
   (2) The thermostat is defective.
   (3) Improper connection between thermostat and switch.
   (4) Heating element defective.
b) Circuit breaker trips when the range is turned on.
   (1) Short circuit.
   (2) Improper incoming voltage.
   (3) Partially defective breaker.
   (4) Defective heating element.

5.14 Toasters

5.14.1 General Description. Toasters are used to toast sliced bread, bagels, etc. Toasters are generally electric, but may also be gas operated. Electric toasters are controlled by a temperature-compensated timer. Variances in supply voltage will not affect the toast color but will affect the toasting cycle time. Adjustments to the toasting cycle are made by varying the color control. Toasters may be the "pop-up" type or conveyor type. The "pop-up" type prepares a fixed quantity at a given time, while the conveyor type may be used in continuous operation. Heat range varies from as low as 122 degrees F to as much as 500 degrees F. Gas toasters are equipped with means for automatic ignition of gas. A pilot is provided with a 100 percent shut-off.

5.14.2 Major Toaster Components. Major toaster components include potentiometer, solenoid, solid state control, and the components shown on Figure 14.

5.14.3 General Operation for Toasters. The product to be toasted is placed in the toaster on the carriage lever or conveyor. After selecting the desired color, the product is placed next to the heating elements. The degree of browness is dependent on how long the product is next to the heating elements and how hot the heating elements are. In "pop-up" style toasters, the temperature of the heating elements and the length of the timing cycle are set by the color control potentiometer. When the correct time/temperature is reached, current flows to the solenoid to release the latch and raise the toast. In conveyor-style toasters, the timing cycle is determined by the speed of the conveyor. When the conveyor moves slowly through the toaster, the product is next to the heating element longer. This results in darker toast.

A Test hot water heater relief valve.

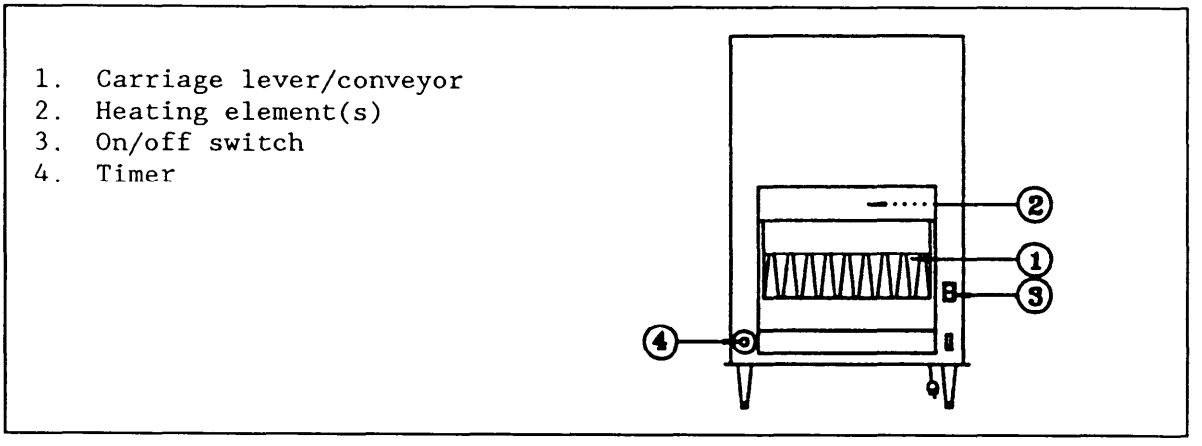

Figure 14
Major Toaster Components

5.14.4 Operation Hints for Toasters

a) Day old bread toasts better.
b) Do not force breads, bagels, etc. that are cut too thick into toaster slots. This will cause a fire.
c) Take care with heating elements to prevent breakage when pulling out bread that has become jammed.

5.14.5 Maintenance for Toasters. Refer to Table 23 for recommended operator and maintenance personnel procedures. See para. 5.4.1 for gas appliance maintenance.

5.14.6 Troubleshooting for Toaster

a) Uneven toasting.
   (1) Burned-out heating elements.
   (2) Heating elements not firmly screwed in.
   (3) Color control switch defective.
   (4) Heating elements dirty.
(b) Toaster heats, conveyor will not move.
   (1) Conveyor system jammed.
   (2) Conveyor motor not on or defective.
   (3) Fuse blown in motor circuit.
   (4) Clutch in drive sprocket slipping.
   (5) Conveyor chain stiffened at pivot point.
   (6) Upper ball bearings defective.
   (7) Conveyor chain slipping off drive sprocket.
c) Conveyor not moving - transmission shaft not turning.
   (1) Sprocket clutch is defective.

d) Motor is not running.
   (1) Circuit breaker is tripped.
   (2) On/off switch defective.
   (3) Motor defective.
e) Toast gets progressively lighter.
   (1) Defective timer.
   (2) Defective color control potentiometer.
f) Toast burns.
   (1) Setting too dark for thickness of bread.
   (2) Defective timer.
   (3) Defective color control potentiometer.

Table 23
Recommended Operator and Maintenance Personnel Procedures for Toasters

FREQUENCY	OPERATOR PROCEDURE
D	Clean machine. Wipe outside and empty crumbs from crumb tray. Make sure that toaster is not energized when cleaning interior.
FREQUENCY	**MAINTENANCE PERSONNEL PROCEDURE**
SA	Check heating elements of electric units.
SA	Check electric insulators, connections, and wiring.
SA	If conveyor-style toaster, lubricate gear motor and conveyor chains - use manufacturer's recommended lubricant.
A	Inspect alignment of carriage levers and conveyor chains; align if necessary.
A	Check motor and motor bearings for overheating by hand touch.

5.15 Dough Proofers

5.15.1 General Description. Dough proofers are used primarily to provide a warm, humid environment for dough to rise prior to baking. They may also be used to keep prepared food warm with either moist or dry heat. The operating temperature range of a proofer is from room temperature to a maximum of 180 degrees F. An enclosed humidifier (with water pan) is included to provide the option of moist heat. Dough proofers are electric and have a thermostatically controlled heating element. The proofer may be either counter-mounted or floor-mounted, depending on the size requirement of the particular facility.

5.15.2 Major Dough Proofer Components. Major dough proofer components are control switch, fan motor, heating elements, humidifier, power-on light, recirculating fan, and thermostat.

5.15.3 General Operation for Proofing Dough. To proof dough or for moist heat, add water to the water pan and set the thermostat to the desired temperature. When the temperature is reached, the dough is placed in the proofing chamber, where the rising process can be observed through a window. Dough proofers can also be used as food warmers. If dry heat is needed, ensure that water is not present in the pan.

5.15.4 Operation Hints for Dough Proofers

a) The normal temperature for proofing dough is 80-100 degrees F. Products such as croissants that have butter in the formulation rise at 80-85 degrees F.
b) Do not attempt to proof dough at temperatures above 125 degrees F.
c) Using hot water to fill the water pan will reduce the time required for the chamber to reach the desired temperature.
d) The proofer may be set on any surface and has no clearance or ventilation requirements.
e) Do not open proofer door unnecessarily; use the window for observation of food in the chamber. This will maintain the internal atmosphere necessary for proper development of the dough and conserve energy.
f) Keep area between door and door frame clean and free of food particles. An obstruction may prevent the door from closing completely which will reduce the efficiency of the proofer.
g) Use fresh water in water pan for each use. Stale or stagnant water will impart undesired odors or flavors to food products.
h) After use, leave door partially open to allow chamber to cool. Unplug when not in use.

5.15.5 Maintenance for Dough Proofers. Refer to Table 24 for recommended operator and maintenance personnel procedures.

Table 24
Recommended Operator and Maintenance Personnel
Procedures for Dough Proofers

FREQUENCY	OPERATOR PROCEDURE
D	Clean and dry water pan and its cover in warm soapy water.
D	Clean exterior and door gasket.
W	Clean interior.
FREQUENCY	**MAINTENANCE PERSONNEL PROCEDURE**
SA	Check electrical connections, wiring, and condition of heating elements.
SA	Check calibration of thermostat. Adjust as required.
SA	Check operation of control panel lights.
A	Tighten or replace loose, missing, or damaged nuts, bolts, or screws.

5.15.6 Troubleshooting for Dough Proofers

a) Chamber does not warm when power is turned on.
   (1) Defective on/off control.
   (2) Defective thermostat.
b) Chamber takes too long to preheat.
   (1) Faulty thermostat.
   (2) Door not fully closed.
c) Food tastes or smells incorrect.
   (1) Water in water pan is not fresh.
   (2) Chamber has not been properly cleaned.
d) Chamber exterior very hot to the touch.
   (1) Insulation defective.
   (2) Fan is not operating properly.
   (3) Temperature set too high.

Section 6: WASHING/CLEAN-UP

6.1 Scope and Maintenance. This section covers a variety of equipment used to clean up after the work is done. Included are dishwashers, disposals, grease traps, and conveyors. This handbook is not intended to replace specific manufacturer's guidance (e.g., inspecting, testing, lubricating, adjusting, calibrating, etc.) for specific equipment models; rather, it provides a common base for developing a comprehensive activity maintenance program. Follow the maintenance procedures outlined in para. 1.3.

6.2 Safety. Follow the safety guidelines listed below. (Safety aspects covered in the system's specifications, but not in the TM, are included in the maintenance section for that specific equipment system.)

a) Some parts of dishwashers may be hot; be sure machine is cool before beginning to work.
b) Watch out for sharp blades on disposals.
c) Avoid snags on conveyors.

6.3 Dishwashers

6.3.1 General Description. Dishwashing machines are classified as single or multiple tank, stationary rack or conveyor type machines. They are designed to remove physical soil from all surfaces of dishes and utensils and to sanitize them.

Dishwashing water tanks are provided with either electric, or steam heat to maintain water temperature. Dishwashing machines are equipped with safety devices for all parts that present safety hazards. The devices include cover and guards for moving parts and shockproof controls for protection from mechanical and electrical hazards to personnel. Because of the significant role dishwashers play in meeting sanitation standards, the activity medical officer is responsible for monitoring proper operation and maintenance.

6.3.2 Major Dishwasher Components. Major dishwasher components include actuator, controls, conveyor, drain assembly, drive mechanism, heat source (water), motors, pumps, shaft, spray manifolds, thermometer, thermostat, and water tanks.

6.3.3 General Operation for Dishwasher. The operation of a dishwasher, regardless of size, provides a wash cycle, rinse cycle and final rinse. The water tanks of the machine are provided with either electric or steam heat to maintain water temperature at a minimum of 180 degrees F. The stationary rack (or door type) machines have a single tank that washes and rinses one rack of dishes at a time. In conveyor dishwashers, the racks of dishes enter at one end and are automatically pulled through the machine, washed, and then rinsed twice before exiting at the other end. This type of dishwasher is sometimes provided with a prewash unit to remove food waste from the dishes before the

wash section and splash curtains at both ends of the hood. Splash curtains, baffles, or both will be provided between prewash, wash, and rinse zones to prevent excessive splash and spray carry over. Dishes move through the machine supported between pegs or on racks. A blower/dryer, when specified, may be furnished to provide complete rapid drying. The "fast rack" type of conveyor system is a continuous operation where dishes in either rack or on the conveyor are pulled through the dishwasher. The items continually run through the dishwasher until removed.

Other important operational considerations for dishwashers include timing cycles, water speed, and water temperatures. Each stage of the dishwashing cycle is timed to provide the optimum exposure required to remove soil and sanitize the dishware and utensils. The volume and speed of the water affects the degree of soil removal. Therefore, it is important that the spray arms and nozzles be kept free of obstructions to ensure that dishware and utensils are exposed to the proper washing and rinsing action. The dishwashing machines are steam or electrically heated, according to specifications. Booster heaters will automatically maintain the required final water rinse temperatures without producing steam either within the heater or the piping connected to the heater. Both electric and steam heat exchangers shall be provided with, but not limited to, controls and safety equipment as follows: water line strainer (and a steam liner for steam), steam traps (steam-only), pressure relief valve, hot water pressure regulator, pressure and temperature gages, thermostatically controlled electric solenoid valve (or thermostatically controlled mechanical valve for steam), high temperature limit switch, low water cutoff, and electrical contactors. In general, water temperature shall be greater than 110 degrees F for prewash, 161 degrees F for washing, and 180 degrees F for final rinse for effective washing and sanitizing. Monthly verification of thermometer accuracy is therefore an important maintenance requirement to be sure that sanitary standards of the governing National Sanitation Foundation (NSF) Standard No. 3, Commercial Spray-Type Dishwasher, are met.

6.3.4 Operation Hints for Dishwasher

a) Dishwashers provided with steam heat will have steam coils. The maintenance of this type of heating system is to keep the controls clean and free of foreign material and steam pressure between 20 and 45 psi.
b) When checking the operation of the low water cut-off system with electric heat, do not energize the elements by manually raising the low water cut-off float. This can cause premature element failure. Check the manufacturer's literature for information on the operation, adjustment, and replacement of parts if the problem persists.
c) Where hard water conditions are probable, a deliming program can prevent the buildup of scale and can also prevent many

unnecessary service problems. Use care to select USDA approved descaling agents for food service equipment.

6.3.5 Maintenance for Dishwasher. Refer to Table 25 for recommended operator and maintenance personnel procedures.

6.3.6 Dishwasher Troubleshooting

a) Tank not holding water.
   (1) Drain closing improperly.
   (2) In multi-tank dishwashers, check to see if curtains are installed.
   (3) Overflow strainer not properly seated. Check O-ring in drain fitting.
b) Pumps do not start.
   (1) Ensure tanks are completely filled.
   (2) Low water cut-off relay dirty or defective.
   (3) Loose connection in low water cut-off circuit.
   (4) Check if overload heater tripped.
   (5) Defective pump motor.
   (6) Obstruction or foreign object caught in suction riser or pump outlet.
c) Leakage at pump.
   (1) Worn pump impeller seal.
   (2) Worn gasket or O-ring at pump suction or outlet.
d) Poor final rinse spray.
   (1) Line strainer clogged or damaged.
   (2) Low final rinse flow pressure. Increase if below 15 psi. Recommended flow pressure is 20 psi. Maximum 25 psi.
   (3) Clogged rinse pipe nozzles.
   (4) Final rinse actuator control working improperly. Check micro-switch or adjust actuator as required.
e) No final rinse spray.
   (1) Final rinse water line valve closed.
   (2) Conveyor may not be turned on.
   (3) Clogged rinse tubes.
   (4) Rinse and fill switch faulty.
   (5) Electric solenoid diaphragm or plunger not operating.
f) Conveyor will not run.
   (1) Power is off; check breaker and fuses.
   (2) Slipping or broken belt.
   (3) Slipping clutch.
   (4) Defective conveyor motor. Measure motor current and voltage.
   (5) Check if conveyor motor overload relay tripped. Reset and check for jammed conveyor or damage in drive linkage or seized bearings.

Table 25
Recommended Operator and Maintenance Personnel
Procedures for Dishwashers

FREQUENCY	OPERATOR PROCEDURE
D	Clean thoroughly at the end of each washing period.
W	Check thermometers and gauges for readings and adjust controls to proper settings.
M	Fill tanks and check for leaks and proper operation of shut-off, re-activation, and heater safety level valves. Check proper operation of float switches and solenoid valve in fill tank.
Q	Inspect soap and spray solution feeder lines.
Q	Check operation of wash and rinse spray mechanism for spray coverage and draining. Check and inspect spray pipe assemblies.
Q	Inspect and clean in-line strainer and gasket.
Q	Check pressure and temperature readings against manufacturer reference or, as a minimum, those listed in paras. 6.3.3 and 6.3.4. Checks shall include pre-wash, wash, rinse, final rinse and steam (if applicable) settings, thermostats, and thermometers.
SA	Check motors and bearings for overheating by hand touch.
SA	Inspect splash curtain for clearance and water tightness.
SA	Observe dish conveyor movement and adjust chain if necessary.
SA	Lubricate conveyor drive bearings, bushings, and chain driver.
SA	Check door operation for chain and counterweight movement, warping, and water tightness. Adjust as necessary.
SA	Check pumps for leakage and obstruction.
SA	Grease or oil all shafts with fittings and motors with manufacturer recommended lubricant.
SA	Check and adjust belt tension.
SA	Check operation of safety stop, conveyor belt motor, and clutch and adjust cut-off switch mechanism.
A	Check oil level in motor gear box.
A	Test hot water heater relief valve.

Table 25 (Continued)
Recommended Operator and Maintenance Personnel
Procedures for Dishwashers

FREQUENCY	MAINTENANCE PERSONNEL PROCEDURE
	Source (Steam, Electric)
AR(S&E)	Descale dishwasher.
A(S)	Inspect and clean steam strainer.
A(E)	Check and tighten electrical connections.
A(E)	Check and clean scale from heating elements.

g) Low or no tank heat.
   (1) Check for power or blown fuses (electric heat).
   (2) Check if low water cut-off relay is energized.
   (3) Machine using more water than normal; rinse running through wash cycle caused by faulty rinse micro switch in timer.
   (4) Check thermostat setting and for faulty thermostat/thermometer.
   (5) Contactor faulty.
   (6) Steam pressure below 20 psi (steam heat).
   (7) Solenoid valve faulty (steam heat).
   (8) Steam trap defective (steam heat).

h) Water leaks from top of door.
   (1) Spray arms bent or not moving freely.
   (2) Leaky gasket.

i) Machine begins to wash when power switch is turned on without operating start switch.
   (1) Timer motor, micro switch faulty.
   (2) Start switch faulty.
   (3) Cycle relay faulty.

j) Wash motor runs, but machine fails to wash satisfactorily.
   (1) Wash water temperature of 150 degrees F to 160 degrees F is not maintained.
   (2) Inadequate or improper detergent being used.
   (3) Pump intake strainer is dirty.
   (4) Wash tubes not turning.
   (4) Final rinse actuator control working improperly. Check micro-switch or adjust actuator as required.

e) No final rinse spray.
   (1) Final rinse water line valve closed.
   (2) Conveyor may not be turned on.
   (3) Clogged rinse tubes.
   (4) Rinse and fill switch faulty.

(5) Electric solenoid diaphragm or plunger not operating.

f) Conveyor will not run.
   (1) Power is off; check breaker and fuses.
   (2) Slipping or broken belt.
   (3) Slipping clutch.
   (4) Defective conveyor motor. Measure motor current and voltage.
   (5) Check if conveyor motor overload relay tripped. Reset and check for jammed conveyor or damage in drive linkage or seized bearings.

g) Low or no tank heat.
   (1) Check for power or blown fuses (electric heat).
   (2) Check if low water cut-off relay is energized.
   (3) Machine using more water than normal; rinse running through wash cycle caused by faulty rinse micro switch in timer.
   (4) Check thermostat setting and for faulty thermostat/thermometer.
   (5) Contactor faulty.
   (6) Steam pressure below 20 psi (steam heat).
   (7) Solenoid valve faulty (steam heat).
   (8) Steam trap defective (steam heat).

h) Water leaks from top of door.
   (1) Spray arms bent or not moving freely.
   (2) Leaky gasket.

i) Machine begins to wash when power switch is turned on without operating start switch.
   (1) Timer motor, micro switch faulty.
   (2) Start switch faulty.
   (3) Cycle relay faulty.

j) Wash motor runs, but machine fails to wash satisfactorily.
   (1) Wash water temperature of 150 degrees F to 160 degrees F is not maintained.
   (2) Inadequate or improper detergent being used.
   (3) Pump intake strainer is dirty.
   (4) Wash tubes not turning.

k) None of the automatic functions work (wash, rinse).
   (1) Start switch faulty.
   (2) Wire connections broken; loose.
   (3) Timer rinse or wash micro switch faulty.

l) Vacuum breaker leaks.
   (1) Limed up, replace disc.
   (2) Faulty; replace when the seat is worn.

6.4 Waste Disposals

6.4.1 General Description. Disposals are designed to grind food waste into tiny pieces that can pass easily through the sewer system. These units

are installed under sink drains so that food can be scraped off dishes and rinsed down the drain.

6.4.2 Major Disposal Components. Major disposal components are bearings, blades, disconnect handle, impact bars or blades, motor, on/off switch, rotor, sizing ring, solenoid, and timer.

6.4.3 General Operation for Waste Disposals. Disposals use cutting blades or impact bars to grind waste. With cutting blades, the disposal works like a blender. The blades are attached to a spinning rotor that shreds food into little bits. These bits are washed into the sewer line by water running through the disposal. Impact bars, however, are attached to a rotor that rotates at a higher rate and simply disintegrates the food waste upon impact. As with cutting blades, disintegrated food is washed away with running water.

6.4.4 Operation Hints for Waste Disposals

a) Best results are produced when food waste is fed into the disposal in a steady, continuous flow.
b) Always be sure cold water is running into the unit during operation.
c) Do not insert metal, wood, cloth, plastic, string (floor mops), cellophane, rubber bands, grease, or polyethylene materials into the disposal; these items may cause damage to the grinding chamber, burn out the motor, or block sewer lines.
d) In regular use, wearing of the working parts of the disposal is to be expected. As gradual wear occurs, the solid particles passing into the waste line will grow increasingly larger, and stoppage may result. Weekly clean-out and checkup is recommended to keep waste line stoppage to a minimum.

6.4.5 Maintenance for Waste Disposals. Refer to Table 26 for recommended operator and maintenance personnel procedures. **CAUTION**: Always ensure power to the unit is turned off at the breaker before working inside disposals.

6.4.6 Waste Disposal Troubleshooting

a) Motor hums, but rotor does not turn normally.
   (1) Unit jammed.
b) Motor will not start.
   (1) Check circuit fuse or breaker.
   (2) Overload protection tripped.
   (3) If magnetic starter is used, defective starter coil.
   (4) If manual starter is used, defective heater.

Table 26
Recommended Operator and Maintenance Personnel Procedures for Waste Disposals

FREQUENCY	OPERATOR PROCEDURE
D	Listen for abnormal noise in motor bearings.
W	Check for leaks to drain connection; tighten if required.
FREQUENCY	**MAINTENANCE PERSONNEL PROCEDURE**
M	Check for free movement of rotor; make sure there is no binding.
M	Check motor and associated wiring for moisture.
M	Inspect leading edges of impact bars or cutting blades for wear.
M	Inspect spacing between outer edge of rotor and inner diameter and sizing ring.
SA	Check motor brushes and starter.

c) Water supply insufficient.
   (1) Low water pressure.
   (2) Water supply line is smaller than manufacturer's recommendation (usually 3/4 inch).

d) When "STOP" button is pushed, motor stops but water continues to flow.
   (1) Dirty or defective solenoid.
   (2) Faulty shut-off valve ahead of solenoid.

e) When "START" button is pressed, motor starts but water does not flow.
   (1) Shut-off valve ahead of the solenoid is turned off.
   (2) Solenoid coil burned out.

f) Odor coming from unit.
   (1) Food particles have probably remained in unit and decomposed.

g) Waste line stoppage.
   (1) The food may not be getting completely ground. The spacing between the two grinding components shall be about 1/64 inch to allow only the tiniest of waste solids to pass. If this space grows to 3/32 inch, waste line stoppage may result.

h) Disposal grinds too slowly.
   (1) Insufficient water flow.
   (2) Improper amount or type of waste material put into disposal.
   (3) Flyweight on flywheel broken or shredder ring dull.

i) Disposal is noisy.
   (1) Foreign object in disposal.
   (2) Loose mounting screws.
   (3) Broken flyweight or flywheel.
   (4) Motor defective.

6.5 Conveyors

6.5.1 General Description. Conveyors are most commonly used to transport soiled dishes to the dishwasher or to assemble patient trays in hospitals. Conveyors are made of slats that are composed of very durable, high strength plastic or nylon. Slatted conveyors make it easier to replace damaged parts and to curve the track. Occasionally, conveyors are made of a continuous belt of a flexible synthetic fabric. These are used for straight pieces of track, and are not as common as slats. This section deals with slatted conveyors.

6.5.2 Major Conveyor Components. Major conveyor components include drive chain, drive shaft and bearings, motor, potentiometer, slats, sprocket gears, washbox, and the components shown on Figure 15.

6.5.3 General Operation. The conveyor is a series of slats attached to a drive chain. The whole conveyor system is powered by a small DC motor, usually 1/2 to 1 HP, depending on size and length of conveyor. This motor drives a shaft with bearings on both ends, which then turns a sprocket gear. The teeth on the sprocket gear grab the drive chain between links and pull it along. There is a sprocket gear at each end of the conveyor system to pull the chain from top to bottom at one end and from bottom to top at the other.

The conveyor system is a long, shallow stainless steel trough. In the middle of this trough is a depression designed to hold the drive chain. The slat trunk and drive chain fit into this groove such that the tops of the slats are about even with the floor of the trough. At the end where the slats and chain go around the sprocket, there is a return track. This generally consists of two angles hung from the bottom of the trough. The flanged lip of the bottom of the slat rides on this. In some cases, the return track is a series of rollers on which the top of the slats would ride.

At some point on the return track, there is a wash box that sprays water up onto the slats to rinse them off.

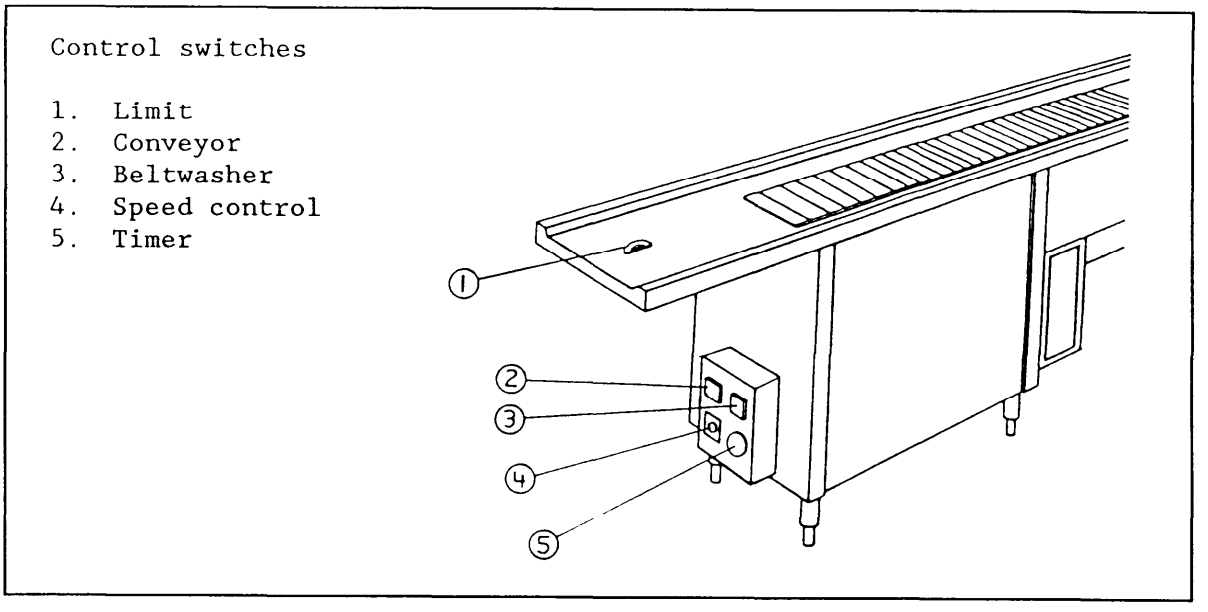

Figure 15
Major Conveyor Components

6.5.4 Operation Hints for Conveyors

a) To facilitate lubrication in hard-to-reach places, an extension tube to the grease point is recommended.
b) Load items on the conveyor centered over the drive chain. This prevents the slats from leaning into and wearing out the trough.
c) Make sure the trough is well drained.
d) Ensure that chain guards, housing doors, and skirting panels are in place when conveyor is in operation in order to prevent bodily injury to operating personnel.
e) Turn conveyor circuit breaker off when performing maintenance on equipment. Since equipment acts as a conductor of electricity, respect all grounding and bonding codes.
f) When inspecting operation of conveyor, keep away from sprockets, chains, motors, etc. Never place your hands where you cannot see them. Do not place hands anywhere in the chain drive area.
g) Lubricate conveyor chain only when equipment is stopped but just prior to start-up. Lubrication is best applied at a point where the belt moves away from the nearest sprocket.
h) Limit switches supplied with equipment are there for specific purposes such as safety, tray control, wear prevention, etc.

Circumventing the operation of these switches can cause personal injury and conveyor damage. Do not block limit switches with an object in order to stop conveyor.

i) Conveyor wiring will not withstand direct hosing down of electrical parts. Hosing down is dangerous, and it will cause severe damage to the equipment.

j) When the conveyor is off, rotating the motor by hand can cause damage to electrical controls if the motor leads remain attached.

k) Failure to replace missing belt slats on the conveyor chain can cause the belt to fall out of the track with possible bodily harm and damage to the equipment.

l) Do not use detergent or disinfectants containing chlorine, ammonia or iodine on the caddy, plastic conveyor parts, or any like material. Use of these chemicals will cause serious deterioration of plastic parts, most importantly the belt itself.

m) Do not spray water directly onto motor. Motors are splash-proof but not waterproof.

n) Do not permit materials to clog drains.

o) Drive chain is generally kept with a slight slack, since a tight chain may cause bearing to fail.

p) Improper slack left in the drive chain will give the chain a chance to "climb" the drive sprocket of the gear reducer, thus creating a jam that may damage the gear reducer, the motor, and the base.

6.5.5 Maintenance for Conveyors. Refer to Table 27 for recommended operator and maintenance personnel procedures.

6.5.6 Troubleshooting for Conveyors

a) Motor will not run.
   (1) Power off.
   (2) Limit switch activated.
   (3) Brushes worn.
   (4) Water-damaged component.
   (5) Object jammed in belt.
   (6) Frozen bearings.
   (7) Drive chain jam.
   (8) Controller defective.
   (9) Torque too low.

b) Motor runs; belt does not.
   (1) Belt sprocket misaligned.
   (2) Defective gear box.
   (3) Torque too low.
   (4) Key out of drive shaft.

Table 27
Recommended Operator and Maintenance Personnel Procedures for Conveyors

FREQUENCY	OPERATOR PROCEDURE
D	Wipe soil and food particles off slats and clean out trough.
D	Check wash box for clogged spray nozzles.
M	Inspect return tracks for thin, worn spots.
AR	Look for and repair worn spots in trough.
FREQUENCY	**MAINTENANCE PERSONNEL PROCEDURE**
AR	Replace missing or damaged slats immediately to prevent extreme damage to conveyor.
Bi-W	Visually check belt and chain for signs of wear.
M	Change oil after the first month of operation.
M	Check return track for wear, sediment build-up, and alignment.
Q	Check oil. Add as needed.
SA	Check alignment or tracking of the belt.
SA	Lubricate chain.
SA	Check sprockets; align and tighten set screws.
SA	Lubricate bearings on shaft.
A	Check set screw on bearings.
A	Check carbon brushes.
A	Change oil.

c) Motor runs intermittently.
   (1) Control erratic.
   (2) Loose wire connection.
d) Feet break off belt slats.
   (1) Sprockets are too high or too low.
e) Belt does not run smoothly.
   (1) Belt needs lubrication.
   (2) Belt slack excessive.
   (3) Drive chain has excessive slack.

(4) Object in belt track.
(5) Turn material worn.

f) Belts jam on return.
(1) Worn return guides.
(2) Return guides out of alignment.

g) Belt falls out of return track.
(1) Worn return track.
(2) Misaligned return track.
(3) Slats missing from belt chain.

h) Noisy belt travel.
(1) Lack of lubrication on belt chain.

6.6 Grease Traps

6.6.1 General Description. Grease traps are used to remove grease, fats, food particles, and other unsoluable materials from wastewater before they enter the main sewer. Figure 16 illustrates typical grease traps.

6.6.2 General Operation. Wastewater flows into the grease trap from the kitchen sink. Grease and other materials will float on the top of the water. This allows grease-free water to flow from the bottom of the trap into the main sewer line. The grease can then be removed for proper disposal.

6.6.3 Maintenance. Because of their simple design, grease traps require minimal maintenance. Clean and flush them weekly. If the kitchen is not equipped with a disposal, daily cleaning is recommended. Large galley operations may also require daily cleaning of the grease trap. Cleaning is done by removing the cover and suctioning or scooping out the grease and food particles. The trap can then be flushed with clean water. If the trap backs up, use normal procedures for unclogging pipes.

1. Cleanout
2. Cover
3. Inlet
4. Outlet

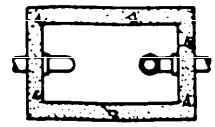

PLAN
(TOP REMOVED)

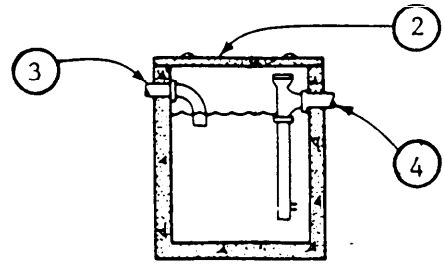

SECTION
CONCRETE BOX

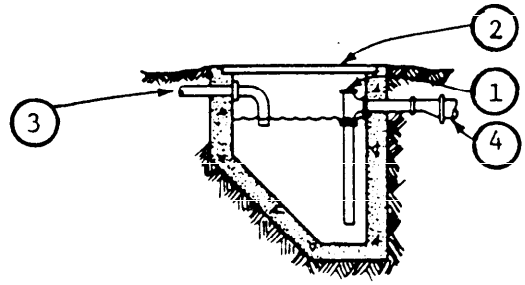

Figure 16
Typical Grease Traps

Section 7: REFRIGERATION AND FREEZER UNITS

7.1 Scope and Maintenance. This section covers refrigeration and freezer units. Although written primarily for commercial refrigerator systems, reference the maintenance and troubleshooting sections for any equipment with a refrigeration unit. This handbook is not intended to replace specific manufacturer's guidance (e.g., inspecting, testing, lubricating, adjusting, calibrating, etc.) for specific equipment models; rather, it provides a common base for developing a comprehensive activity maintenance program. Follow the maintenance concepts outlined in para. 1.3.

7.2 Refrigerators

7.2.1 General Description. Commercial refrigeration and freezer units come in a variety of models and sizes. They can accommodate many different uses in product preparation, display, and storage. The largest refrigerators and freezers are the room-sized walk-in refrigeration systems. Walk-ins are used to store mass quantities of food and large, bulky items (e.g., boxes of frozen food, carcass meats). Walk-ins may be provided with shelves and/or meat racks. Food products may be stored for prolonged periods of time in walk-ins.

Upright refrigeration systems, on the other hand, are mainly used for the temporary storage of limited food quantities near preparation, assembly, and serving areas. Upright refrigeration systems include reach-in, roll-in, under-counter, and display models.

Reach-in refrigerators and freezers provide shelf or pan-slide storage. They are generally used for storing prepared or portioned foods and food ingredients for work areas. They are available in one-, two-, and three-section capacities.

Roll-in refrigerators and freezers are also designed for mobile cart storage. They allow easy transfer and storage of large food quantities. In addition, they can be used to move food from walk-ins to temporary storage areas. They are available in one-, two-, and three-section capacities.

Undercounter refrigerators or freezers are designed for installation under preparation, assembly, and serving counters. They keep ingredients immediately available and fresh under safe temporary storage temperatures. They are also available in one-, two-, and three-section capacities.

Griddlestand refrigerators have drawers that provide immediate access to short-order items. Griddlestands are usually installed under fryers and griddles for storage. They also are available in one-, two-, and three-section capacities.

Display refrigerators and freezers have sliding or hinged glass doors and provide safe temporary storage and viewing of prepared foods, such as salads and desserts. They are usually located in self-service areas. Cabinets are available as full upright models, wall-mounted units, or countertop cabinets.

Chilling refrigerators (chill boxes) are used for safely cooling hot pre-cooked foods through the 130 - 45 degree F danger zone by means of high-velocity convected air. The cabinets can also be converted to 38 degrees F conventional storage refrigerators when processing is not required.

7.2.2 Major Refrigerator Components. Major refrigerator components are cabinet, condenser, compressor, control switch, evaporator, receiver, refrigerant metering device, and thermostat.

7.2.3 General Operation. The basic refrigeration process deals with removing of heat and maintaining a chilled temperature. Regardless of the large variety of refrigeration units and features on the market, they all involve the same process of heat transfer by using evaporators, refrigerant, a compressor, and a condenser.

7.2.4 Operation Hints for Refrigerators

a) Place refrigeration unit in a well-ventilated area. Ensure that room temperature is either below 110 degrees F or above 45 degrees F.
b) Set temperature control at optimum temperature to avoid thawing or freezing. Avoid frequent changing of thermostat setting.
c) Do not allow excessive frost to build up in freezer. This tends to decrease efficiency.
d) Load refrigerator so that food does not cover air vents.

7.2.5 Maintenance for Refrigerators. Refer to Table 28 for recommended operator and maintenance personnel procedures.

7.2.6 Troubleshooting for Refrigerators

a) Refrigerated cabinet temperature too high.
   (1) Shortage of refrigerant or leak in system.
   (2) Restricted capillary tube, strainer, or dryer.
   (3) Control setting too high.
   (4) Capillary tube partially restricted.
   (5) Evaporator frozen.
   (6) Inefficient compressor.

Table 28
Recommended Operator and Maintenance Personnel
Procedures for Refrigerators

FREQUENCY	OPERATOR PROCEDURE
D	Clean the exterior of refrigerators, display cases, freezers, and under-counter models.
D	Sweep and mop walk-in refrigerator floors daily.
W	Clean the interior of refrigerators, display cases, freezers, and under-counter models.
Q	Defrost frozen-food storage cabinets not equipped with automatic defrost.
SA	Remove all food, clean and sanitize walk-in refrigerators and freezers.
FREQUENCY	**MAINTENANCE PERSONNEL PROCEDURE**
M	Blow down/clean condenser, hand clean compressor with cloth.
Q	Check temperature inside refrigerator and calibrate thermostat as required.
Q	Visually check piping and valves for refrigerant leaks.
Q	Check motor and motor bearings for overheating.
SA	Lubricate motor bearings.
SA	Check door gasket for proper sealing.
SA	Clean ventilation grilles, etc. of dust build-up.
SA	Visually check and lubricate door hinges.
	For display cases/freezers, reach-in boxes (upright and chest types), do the following PM in addition to those identified above.
Q	Visually check for water and oil leaks.
SA	Clean and lubricate evaporator fan and motor.
SA	Inspect evaporator drain for proper operation.
A	Check compressor and condenser for proper operation.

Table 28 (Continued)
Recommended Operator and Maintenance Personnel
Procedures for Refrigerators

FREQUENCY	MAINTENANCE PERSONNEL PROCEDURE
A	Clean, prime and paint any corroded areas.
A	Check refrigerator piping for damaged or missing insulation.
A	Inspect electrical controls for burned or loose contacts, burned insulation, and loose connections.
AR	Inspect evaporator for dirt and/or ice buildup.
	In addition to the above, do the following for chill boxes, freezers, walk-in boxes and freezer combinations.

b) Freezer compartment warm.
   (1) Thermostat set too high.
   (2) Bad thermostat.
   (3) Freezer fan motor not running.
   (4) Evaporator iced up.
   (5) Light stays on.
   (6) Freezer door gaskets not sealing.
   (7) Freezer compartment door switch erratic.
   (8) Defective automatic defrost control.
   (9) Defrost valve solenoid burned out.
   (10) Restricted hot gas bypass line.
c) Loose wire at automatic defrost control or solenoid valve.
   (1) Excessive freezer compartment load.
   (2) Drain trough heater burner out.
   (3) Abnormally low room temperature.
   (4) Packages blocking air distribution.
d) Inoperative defrost circuit.
   (1) Defrost timer motor inoperative.
   (2) Inoperative defrost heater.
   (3) Faulty defrost limiter.
e) Refrigerator has odors.
   (1) Dirty drain pan.
   (2) Clogged drains.
f) Compressor fails to start (no hum).
   (1) Power failure.
   (2) Disconnect switch open.
   (3) Fuse blown.
   (4) Burned-out compressor motor.

(5) Inoperative motor starter.
(6) Control circuit open.
(a)Oil failure control.
(b)Overload protection tripped.
(c)Thermostat setting too high.
(d)Low-pressure control open.
(e)High-pressure control open.
(7) Loose wiring.

g) Compressor will not start (hums and trips overload protector).
(1) Low voltage to unit.
(2) Bad starting capacitor.
(3) Starting relay open.
(4) Burned-out compressor motor.
(5) Mechanical problems in compressor.
(6) Liquid refrigerant in compressor crankcase.
(7) Bad running capacitor.
(8) Unequalized pressures on PDC motor.

h) Compressor will run, but remains on start winding.
(1) Low voltage to unit.
(2) Starting relay does not open.
(3) Bad running capacitor.
(4) High discharge pressure.
(5) Open or shorted motor winding.
(6) Mechanical trouble in compressor.
(7) Defective overload protector.

i) Compressor starts and runs, but has short cycles.
(1) Defective overload protector.
(2) Low voltage to unit.
(3) Defective run capacitor.
(4) High discharge pressure.
(5) Suction pressure too low or too high.
(6) Compressor too hot.
(7) Shorted motor winding.
(8) Dirty or iced evaporator.
(9) High pressure or low pressure control differential set too close.
(10) Condenser water regulating valve inoperative.
(11) Condenser water temperature too high.
(12) Erratic thermostat.

j) Unit operates excessively.
(1) Short of refrigerant.
(2) Thermostat contacts fail to open.
(3) Excessive load.
(4) Evaporator coil iced.
(5) Restriction in refrigerant system.
(6) Dirty condenser.
(7) Restricted air over evaporator.
(8) Inefficient compressor.

k) Compressor loses oil.
   (1) Traps in hot gas and/or suction lines.
   (2) Refrigerant velocity too low in risers.
   (3) Shortage of refrigerant.
   (4) Liquid refrigerant flooding back to compressor.
   (5) Gas-oil ratio low.
   (6) Plugged expansion valve or strainer.
   (7) Compressor short cycling.
   (8) Superheat too high at compressor suction.
l) Compressor noisy.
   (1) Lack of compressor oil.
   (2) Tubing rattles.
   (3) Mounting loose.
   (4) Oil slugging.
   (5) Refrigerant flooding compressor.
   (6) Dry or scored shaft seal.
   (7) Internal parts of compressor broken or worn.
   (8) Compressor drive coupling loose.
m) Unit low on capacity.
   (1) Ice or dirt on evaporator.
   (2) Expansion valve stuck or dirty.
   (3) Improper TXV superheat adjustment.
   (4) Wrong size expansion valve.
   (5) Excessive pressure drop in evaporator.
   (6) Clogged strainer.
   (7) Liquid flashing in liquid line.
n) Suction line frosted or sweating.
   (1) Superheat setting too low.
   (2) Expansion valve stuck open.
   (3) Evaporator fan not running.
   (4) Overcharge of refrigerant.
o) Liquid line frosted or sweating.
   (1) Restricted dryer or strainer.
   (3) Liquid line shut-off valve partially closed.
p) Hot liquid line.
   (1) Expansion valve open too wide.
   (2) Refrigerant shortage.
q) Top of condenser coils cool when unit is operating.
   (1) shortage.
   (2) Refrigerant overcharge.
   (3) Inefficient compressor.
r) Unit in vacuum, exhibited by frost on expansion valve only.
   (1) Ice plugging expansion valve orifice.
   (2) Expansion valve strainer plugged.
s) High head pressure.
   (1) Overcharge of refrigerant.
   (2) Air in system.
   (3) Dirty condenser.

(4) Unit in too hot location.
(5) Water-cooled condenser plugged.
(6) Condenser water too warm.
(7) Cooling water shut off.

t) Low head pressure.
(1) Shortage of refrigerant.
(2) Cold unit location.
(3) Cold condenser water.
(4) Inefficient compressor valves.
(5) Leaky oil return valve in oil separator.

u) High suction pressure.
(1) Evaporator overloaded.
(2) Expansion valve stuck open.
(3) Expansion valve too large.
(4) Leaking compressor suction valves.
(5) Evaporator too large.

v) Low suction pressure.
(1) Shortage of refrigerant.
(2) Evaporator underloaded.
(3) Liquid line strainer clogged.
(4) Plugged expansion valve.
(5) Lost charge on TXV power assembly.
(6) Space temperature too low.
(7) Expansion valve too small.
(8) Excessive pressure drop through evaporator.
(9) Oversized compressor.

w) Loss of compressor oil pressure.
(1) Loss of compressor oil.
(2) Malfunction oil pump.
(3) Oil pump inlet screen plugged.

x) Starting relay burned out.
(1) Compressor short cycling.
(2) Improper relay mounting.
(3) Relay vibrating.
(4) Wrong relay.
(5) Wrong running capacitor.
(6) Excessive line voltage.
(7) Low line voltage.

y) Starting relay contacts stuck.
(1) Unit short cycling.
(2) Bad bleed resistor.

z) Starting capacitors burned out.
(1) Compressor short cycling.
(2) Prolonged operation on starting winding.
(3) Sticking relay contacts.
(4) Wrong capacitor.

aa) Running capacitors burned out.
(1) Excessive line voltage.

(2) Wrong capacitor.
(3) Light compressor load.

bb) Evaporator freezes but defrosts while unit is running.
(1) Moisture in system.

cc) Evaporator coil iced over.
(1) Automatic defrost control erratic or inoperative.
(2) Automatic defrost control improperly wired.
(3) Defective defrost control thermal element.
(4) Improperly installed control thermal element.
(5) Defrost control termination point too low.
(6) Defrost valve solenoid burned out.
(7) Defrost valve stuck closed.
(8) Restricted hot gas bypass line.
(9) Inoperative freezer compartment door switch.
(10) Inoperative freezer compartment fan.
(11) Freezer defrost element burned out.
(12) Freezer compartment drain trough or drain panheater burned out.
(13) Freezer compartment drain line plugged.

dd) Refrigerator remains in the defrost cycle.
(1) Defrost control incorrectly wired.
(2) Automatic defrost control inoperative.
(3) Defrost control termination point too high.
(4) Defrost solenoid valve stuck open.
(5) Room temperature too low (below 55 degrees F or 12.8 degrees C).

ee) Water collects in bottom of refrigerator/freezer.
(1) Drain tube plugged.
(2) Drain tube frozen.
(3) Split drain trough.
(4) Water leakage between trough and cabinet liner.
(5) Fresh food compartment liner warped.
(6) Evaporator baffle not properly installed.
(7) Humidiplate not adjusted properly.
(8) Door gasket not sealing properly.

ff) Condensation on outside of cabinet.
(1) Door gaskets leaking
(2) Mullion heater burned out.
(3) Wire loose to mullion heater.
(4) Abnormally high humidity.

Section 8: MISCELLANEOUS EQUIPMENT

8.1 Scope and Maintenance. This section covers miscellaneous equipment that was excluded from other sections. Equipment includes steam tables, fat filters, ice cream machines, and ventilation and fire suppression equipment. Follow the maintenance concepts outlined in para. 1.3.

8.2 Steam Tables

8.2.1 General Description for Steam Tables. Steam tables are for keeping food hot while on a serving line. A water pan, topped by a frame to hold pans of food, is filled to the proper level (about 7 inches) with hot water and brought to 185 to 200 degrees F. Food trays can be placed in the frame above the water. Hot steam then surrounds the trays, keeping food hot 15 to 30 minutes. Steam tables may be gas or electric.

8.2.2 Major Steam Table Components. Major steam table components include control switch, drain valve, frame, heating element, overflow drain, P-trap, strainer, temperature control, thermostat, water pan, and water supply (optional).

8.2.3 General Operation for Steam Tables. Steam tables provide a moist, uniform heat to the bottom of a serving tray. Water is heated either by an electric coil in the water or a gas or electric burner below the water. Allow the water to steam but never to boil. When the serving tray is placed in the frame above the water, a seal is formed, and hot steam surrounds the pan. Water level is then maintained to prevent boiling and burning of food.

8.2.4 Operation Hints for Steam Tables

a) Temperature higher than 200 degrees F will dry food more quickly and wastes both fuel and food.
b) Wait until water is correct temperature before putting in pans of food in water pan.
c) Do not overload food pan; do not leave in the steam table too long.
d) After serving, turn off heating elements, drain water pan, and thoroughly clean pan of food particles and sediment. Do not use steel wool. Use brush with cleaning powders. After cleaning, refill water pan (to reduce corrosion of heating elements).

8.2.5 Maintenance for Steam Tables. Refer to Table 29 for recommended operator and maintenance personnel procedures. On gas burner operated units, see para. 5.4.1 for gas appliance maintenance procedures. For gas steam tables, refer to Section 5.4.2 for additional troubleshooting procedures.

Table 29
Recommended Operator and Maintenance Personnel
Procedures for Steam Tables

FREQUENCY	OPERATOR PROCEDURE
D	Drain/replace water.
D	Clean exterior.
M	De-lime submerged heating/element.
FREQUENCY	**MAINTENANCE PERSONNEL PROCEDURE**
SA	Inspect water compartment, steam coil, valves, and piping for leaks.
SA	On direct connected steam units, check and clean steam trap and strainer.
SA	On direct connected steam units, check operation of pressure regulating valve and gauge.
SA	Check thermostat and temperature gauge; calibrate thermostat if necessary.
A	On electrically operated units, check insulators, connections, and wiring; tighten connections.
A	Check condition of covers and receptacles.

8.2.6 Troubleshooting for Steam Tables

a) Water does not heat.
   (1) The thermostat is defective.
   (2) Heating element is defective.
   (3) Too much water in pan.
   (4) Fuse is blown.
b) Water boils when thermostat is set low.
   (1) The thermostat is defective.
   (2) Not enough water in pan.

8.3 Fat Filters

8.3.1 General Description. A fat filter is designed to suction fat or oil from a fryer, filter it, and pump it back into the fryer. This process keeps fat or oil clean of contaminants, minimizing fat upkeep and replacement.

8.3.2 Major Fat Filter Components. Refer to Figure 17 for major fat filter components.

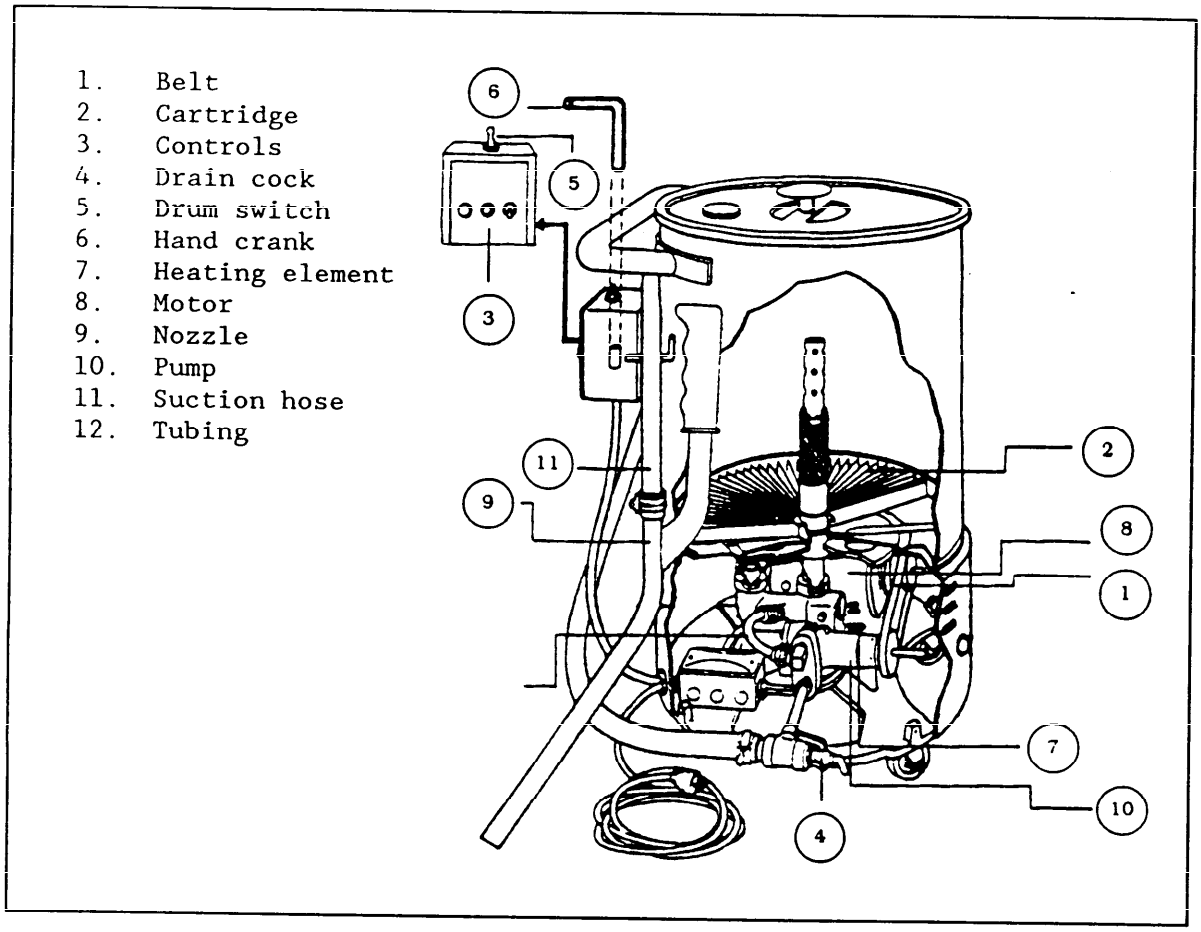

Figure 17
Major Fat Filter Components

8.3.3 General Operation for Fat Filters. Fryer fat is transferred from the fryer tanks to the filter storage drum. After the fryer is cleaned, the cooking oil is filtered and transferred back into the cooking tank.

8.3.4 Operation Hints for Fat Filters

a) While transferring oil from the cooking vat to the filter, place the nozzle in cooking oil approximately 2 inches. This will keep solids from clogging the nozzle tip.
b) Never run water or other corrosive liquids through the fat filter.
c) Filter fat at a temperature less than 250 degrees F for safety.
d) Remove filter cartridge only if replacement is necessary. If cartridge does not need replacing, do not remove and re-insert, as this will lessen its efficiency.

8.3.5 Maintenance for Fat Filters. Refer to Table 30 for recommended operator and maintenance personnel procedures.

Table 30
Recommended Operator and Maintenance Personnel
Procedures for Fat Filters

FREQUENCY	OPERATOR PROCEDURE
D	Inspect filter for replacement.
D	Clean storage drum
FREQUENCY	**MAINTENANCE PERSONNEL PROCEDURE**
W	Clean system per manufacturer's requirements.

8.3.6 Troubleshooting for Fat Filters

a) Fat filter does not start.
   (1) Circuit breaker may be off.
   (2) Pump may be jammed.
   (3) Solid fat clogged in valve assembly.
   (4) Motor burned out.
b) Fat filter will not fill.
   (1) Excessive temperature above 250 degrees F.
   (2) Drain cock open.
   (3) Loose hose connection.
   (4) Belt loose or broken.
   (5) Fill-filter switch not working.
c) Oil not filling over cartridge; coming up from beneath cartridge (gurgling noise).
   (1) Valve assembly jammed; balls not moving in raceway.
d) Fat filter not filtering.
   (1) Filter cartridge clogged.
   (2) Drain cock open.
   (3) Loose hose connection.
e) Fat filter leaks at bottom.
   (1) Bad O-rings in valve assembly.

8.4 Soft Ice Cream Machines

8.4.1 General Description for Soft Ice Cream Machines. This type of equipment dispenses a soft ice cream product for cones, milkshakes, and other dessert items. The mix is put into the mix tank, where it is properly mixed. It is then pumped into the freezing cylinder under pressure. The product is

then drawn from the freezing cylinder through the dispensing head. The soft ice cream machine is provided with a compressor to control the temperature of the mix and a beater or dasher motor to properly mix the product.

8.4.2 Major Soft Ice Cream Machine Components. Major soft ice cream machine components include control switch, freezing cylinder, injection pump, mix tank, mixer/beater, motor overload switch, pressure gauge, refrigeration system, thermostat, water drain, and water supply.

8.4.3 General Operation for Soft Ice Cream Machines. The mechanical function of the refrigeration system becomes almost insignificant when considering the importance of the mix to the finished product. The chemistry and composition of mixes will vary from area to area and season to season. This will reflect changes in the product appearance and, in some instances, in product taste. Mixes are most commonly used in fresh liquid form; however, they are available in powdered, canned, or frozen forms. The basic formulas for the mix of the soft ice cream machine are the same, the only variation being the quantity of the ingredients used. Operate the machine in the temperature range suggested by the manufacturer, and consult the mix supplier regarding a possible change in formula so that the desired consistency is achieved within the temperature range.

8.4.4 Operation Hints for Soft Ice Cream Machines

a) Ensure that units are well ventilated. Recommend 20-inch space to the rear, especially on air-cooled units.
b) Ensure that water-cooled units have a strainer and shut-off valve in the water-supply line. Also ensure that the supply line has an expandable loop to ease moving the unit for servicing.
c) If the unit is provided with a wash kit, be sure it has a drain line separate from the condenser cooling water drain.
d) If the temperature setting is changed, allow 20 to 30 minutes for unit to stabilize at new temperature.
e) Operate the unit within the temperature range recommended by the manufacturer.
f) Long running cycles, when no product is being drawn, can cause damage.

8.4.5 Maintenance for Soft Ice Cream Machines. Refer to Table 31 for recommended operator and maintenance personnel procedures.

Table 31
Recommended Operator and Maintenance Personnel
Procedures for Soft Ice Cream Machines

FREQUENCY	OPERATOR PROCEDURE
D	Clean and sanitize machine.
D	Lubricate per manufacturer's recommendation.
M	Check for loose electrical connections.
M	Check water supply strainer and clean.
Q	Clean condenser on air-cooled machines.
FREQUENCY	**MAINTENANCE PERSONNEL PROCEDURE**
SA	Check tension on belts.
SA	Check refrigerant level.
A	Lubricate compressor motor and bearing.

8.4.6 Troubleshooting for Soft Ice Cream Machines

a) Unit will not operate.
   (1) Blown fuse or tripped breaker.
   (2) Motor overload switch tripped.
   (3) Check for loose connection.
b) Compressor starts and stops intermittently.
   (1) Dirt or lint on condenser fins.
   (2) Check water flow on water-cooled units and supply shut-off valve.
   (3) Pressure control setting.
c) Long running cycle.
   (1) Not enough mix in freezing cylinder.
   (2) No mix in tank.
   (3) Micro switch not set properly or defective.
   (4) Too much air in freezing cylinder.
   (5) Mix in freezing cylinder is very heavy.
   (6) Malfunction in some part of refrigeration unit.
d) Excessive vibration of unit.
   (1) Unit is not level.
   (2) Belt tension not proper.
   (3) Pulleys out of line or loose.
   (4) Compressor damaged.
e) Pitting or discoloration of parts.
   (1) Improper cleaning of machine.

(2) Improper cleaning or sanitizing agents.
(3) Unit assembled while still wet.

f) Product or mix spoiled.
(1) Mix is old.
(2) Unit not properly cleaned/sanitized.
(3) Refrigeration not working.

g) Beater or dasher motor does not start when dispensing head is pulled.
(1) Micro switch defective.

h) High bacteria count in mix or product.
(1) Improper cleaning and/or sanitizing of parts.
(2) Unsterilized container used to transfer mix to unit.

8.5 Ventilation

8.5.1 General Description for Ventilation. Ventilation systems are required for galleys. Central ventilation equipment carries off excess heat and cooking odors generated in the normal cooking process. The cooking process will increase ambient room temperature to incompatible levels for galley personnel, and excess heat must be carried off as it is generated. Central overhead ventilating systems or exhaust fans will perform this task. Certain cooking devices such as broilers, char-broilers, grills, and some fryers require specific ventilation systems for each unit to remove oil fumes, dust, smoke, and odors.

8.5.2 Major Ventilation System Components. Major ventilation system components include automatic cleaning unit, control switch, damper control, detergent feed system, exhaust fan motor, filter, fuses, grease collecting gutter, solenoid valve, thermostat, and time delay relay. (Refer to Figure 18.)

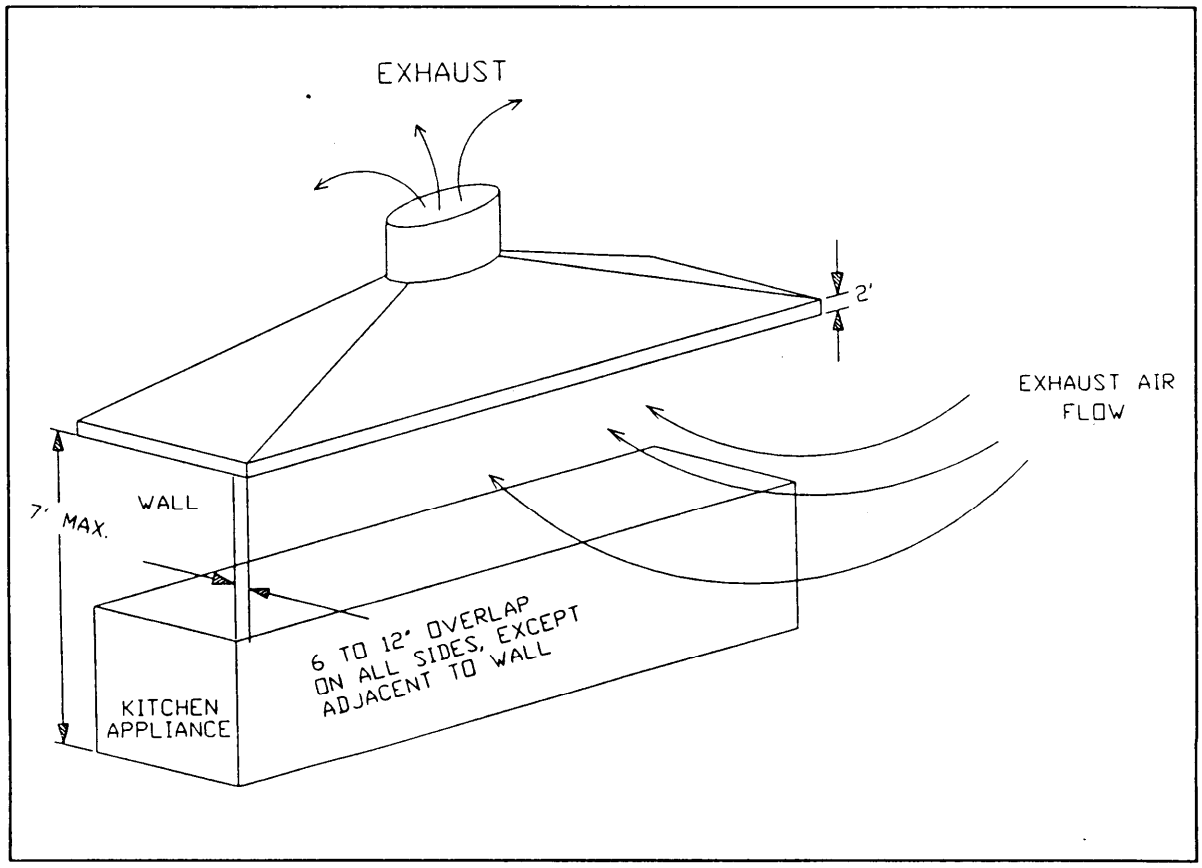

Figure 18
Major Ventilation System Components

8.5.3 General Operation for Ventilation Systems. Galley ventilation systems include the building supply/exhaust system and may have appliance ventilator hoods and/or canopy hoods. The galley air supply is usually set at 90 to 95 percent of the exhaust air to create a negative pressure which keeps odors and smoke from permeating into other building areas. A ventilator is designed to remove combustion gases, heat, grease, dust, lint, and odors generated from the cooking equipment. Grease, dust, and lint are extracted from the air stream as it passes through a grease filter in the ventilator. This grease filter, which is relatively cool due to air flow, condenses hot grease vapors as they pass through the metal screen. The particles are collected into a grease collecting gutter at the bottom of the ventilator and remain out of the air stream until removed by frequent cleaning. Caution must be taken in the care and cleaning of these ventilation systems due to the high content of oil in cooking by-products such as steam and smoke. Cleanliness of ventilation systems is paramount in effective fire prevention. Some canopies and ventilation hoods are equipped with automatic cleaning systems with detergent and hot water.

8.5.4 Operation Hints for Ventilation Systems. Cleanliness is the most important factor in the operation of ventilation systems. Accumulated dust and grease, combined with the heat generated by the cooking equipment serviced by ventilators, make these systems potential fire hazards. Proper and frequent cleaning will minimize this possibility.

8.5.5 Maintenance for Ventilation Systems. Refer to Table 32 for recommended operator and maintenance personnel procedures.

Table 32
Recommended Operator and Maintenance Personnel Procedures for Ventilation Systems

FREQUENCY	OPERATOR PROCEDURE
D	Check detergent level in tank of ventilation systems with automatic cleaner.
W	For a ventilation system with an automatic cleaner, inspect the interior of hood/ducts for cleanliness. If not clean, remove and clean nozzle orifice. If cleaning is not automatic, clean interior of hood with degreasing agent.
W	Clean grease collecting gutter.
FREQUENCY	**MAINTENANCE PERSONNEL PROCEDURE**
Q	Clean spray nozzles.
SA	Visually check operation of exhaust blower.
SA	Check detergent system fittings and tighten if necessary.
SA	Clean detergent tank.
SA	Clean foot valve.
SA	Check blower for belt tightness, belt alignment, belt frays or breaks, and oiling of necessary moving parts.
A	Inspect blades on blower for debris.
A	Lubricate bearings of exhaust blower motor.

8.5.6 Troubleshooting for Ventilation Systems. The following information covers areas other than the ventilator itself and will help determine the problems with the system.

a) Ventilator is not exhausting properly.
   (1) Air velocity through entry slot is below manufacturers' recommendations (1000 to 2000 feet per minute).
      a. Improper blower rotation.
      b. Broken or slipping belt.
      c. Improper size blower (not delivering nameplate rating).
b) Blower discharge system defective.
   (1) Ensure that no other exhaust system is tied into the ventilator exhaust system.
   (2) A screen or restriction over the discharge.
   (3) The discharge is directed downward onto the roof, damping flow.
c) Exhaust blower does not function when "START" button pushed.
   (1) No main power.
   (2) Exhaust control and cleaning station fuse blown.
   (3) Ensure that ventilator plunger arms is "RESET".
   (4) Mechanical malfunction in the interior of the damper control switch.
   (5) The blower switch not being pushed all the way in by the plunger arm.
   (6) Overload protectors within the magnetic starter switch have actuated.
   (7) Defective wire or contactor.
d) Water continues to flow after thermostats have electrically activated the fire protection system and will not automatically shut off.
   (1) Remote fire switch toggle not returned to "NORMAL" position.
   (2) Open thermostats frozen closed because of excessive heat.
   (3) Solenoid valve stuck open.
   (4) Exhaust control and cleaning station timer set at the maximum time cycle.
   (5) Defective wiring or contactor.
e) Ventilator not cleaning properly.
   (1) Clogged nozzles; clean water line strainer.
   (2) Water supply secured.
   (3) Empty detergent tank.
   (4) Low water pressure (range is 40 to 80 psi).
   (5) Low water temperature (temperature range is between 140 and 180 degrees F).
f) Water continues to run after end of cleaning cycle.
   (1) Defective timer.
   (2) Defective solenoid valve.
   (3) Check wiring.
g) The blower and the hot water continue after the "STOP" button is pushed on the exhaust control and cleaning station.

(1) Malfunctioning magnetic interlock and blower starter switch.
(2) "STOP" button not making contact with the switch.
(3) Check wiring circuit.

h) Blower shuts off, but water is not released into the ventilator after the "STOP" is pushed on the exhaust control and cleaning station.
(1) Hot water supply line valve is closed.
(2) Defective timer in the exhaust control and cleaning station.
(3) Defective solenoid valve.

i) Clogged ventilator drain.
(1) Drains less than 1-1/2 inches throughout the system.
(2) Keep elbows in drain line to a minimum.
(3) Keep length of the drain run as short as possible.
(4) Improper drain slope.
(5) Clogged drain.
(6) Clogged bypass flushing line.
(7) Clogged grease trap.

8.6 Fire Suppression Devices

8.6.1 General Description for Fire Suppression Devices. Equip galleys with fire suppression devices, both of the water sprinkler type (thermostatically controlled) for general fire suppression, and fire suppression systems of carbon dioxide, halon, and other chemicals. Specific equipment that may have built-in systems include broilers, char-broilers, fryers, ranges, etc., where flash fires from oil or fat may occur. Often ventilation hoods have built in fire suppression systems that secure the ventilator to prevent spreading the fire. Ensure that these fire suppression devices are dual controlled by a heat sensing device and can be operated by hand controls. Additionally, locate carbon dioxide portable fire extinguishers strategically throughout the galley.

For more detailed explanation of the operation and maintenance of fire fighting systems, refer to MO-117, Maintenance of Fire Protection Systems.

8.7 Electric Motors

8.7.1 Definitions and General Descriptions. An electric motor is a device that converts electrical energy into mechanical energy. Electric motors drive pumps, valve operators, gear sets, and action arms, providing reliable and effective force. There are two types of motors typically found on equipment: universal motors and induction motors. Of the induction motors, there are also two sub categories: split phase, and shaded pole motors.

a) Universal Motors. May be found in an A/C or D/C application. The telling indication for a universal motor is that they have coils for the field and the rotor.
b) Induction Motors. These motors do not have any brushes or rotor windings, work only on A/C current, and require a separate start mechanism.

8.7.2 Major Motor Components. Major motor components include bearings, brushes (universal motor), capacitors (split phase), cooling fan, field winding, frame, grease chamber, motor electric leads, shaft, shaft key, ventilation slot, and yoke and bearing housing.

8.7.3 General Operation for Major Motor Components. An electric motor is a device that changes electricity into mechanical energy. All motors have a stator and a rotor (stationary and rotary) element. The rotor turns inside of the stator when an electric field is produced by electricity passing through the stator. As the rotor shaft turns, it directly drives the machine it is mounted in or is converted into a gear or pulley system.

a) Shaded phase motors utilize a copper strap over a portion of each stator field. This shading causes an imbalance in the electric field and causes the motor to begin turning. The bands are not deactivated during operation.
b) Split phase motors use a separate winding for start up. The start up winding is usually energized through the use of a capacitor which increases the voltage during start up. After the split phase motor reaches operating speed a centrifugal switch shuts off electricity to the start up windings. The start up windings shut off at about 80% of the full load. The split phase motor has an overload protector to prevent the overheating of the motor, if the start up winding fail to shut off. Split phase motors will have either automatic or manual resets to the overload protection.

8.7.4 Operation Hints for Major Motor Components

8.7.4.1 Alignment. Misalignment and vibration are major causes for motor failure. Failure to tightly dowel both motor and driven machines to a common base may result in shifting of the motor or driven machine. Mechanical loads such as the initial jump or torque developed at start up also cause the machine to move. Therefore, periodically check motor alignment and adjust the alignment as required.

8.7.4.2 Overheating. The temperature of a motor will rise during operation. Anything that restricts air circulation through the ventilation passages of the motor will cause it to overheat. For example, lint, blown grass and dust, impede the passage of air through the motor. Further, the presence of oil in the coils, either from bad seals or over-lubrication, can

increase the problem. If the motor is in an enclosed space or small room without ventilation, the surrounding air temperature will quickly rise and will not be able to cool the motor, thereby causing it to overheat.

8.7.4.3 Moisture Control. Moisture causes motor coil insulation to lose its insulating properties. The more moisture, the less insulating value. Enough moisture will cause windings to short circuit and the motor to fail.

Moisture can enter a motor as it "breathes" in moisture-laden air. This can cause condensation on the motor coils after the motor shuts down. Motors that are operated every day will usually be hot enough to evaporate any moisture which has entered with the air. If possible, run motors periodically to prevent moisture build-up. If it is not possible to run the equipment or if a motor has been left standing for a long period, ensure that a qualified person checks the insulation level before the motor is energized.

In addition, motors that are left standing in moist atmospheres are subject to bearing rust. Turn the shafts on motors with oil bearings at least once per month, and those with grease bearings, once every 3 months. A motor that has been immersed in water can be disassembled, washed in clean fresh water, steam-cleaned, and bake-dried using electric heaters and infrared heat lamps. If the immersion has been in salt water, replace the bearings. After cleaning and drying, apply a coat of insulating varnish to all windings. Test the windings for their insulation value before reassembly.

8.7.4.4 Improper Lubrication. Over-lubrication of motor bearings can be as harmful as under-lubrication. Lubricate motors used in a dirty environment every 9 to 12 months. Typically, after 18 months of use, the oil held by the soap in the grease has been used. Replace the grease. Use a lubricating grease recommended by the motor manufacturer. Technical manuals for the specific motor being lubricated will detail the exact lubrication procedures to be followed.

On oil lubricated bearings, use only the proper non-detergent oil. Detergents cause the oil to penetrate the seals, damage the motor windings, and create ventilation problems.

8.7.4.5 Voltage Imbalance in Three-Phase Supply Systems. This is usually caused by large, single-phase loads being put on a three-phase system. A motor operating with imbalanced voltage can fail because of excessive temperature increases. Loose connections and transformer malfunctions can also cause voltage imbalances. Check line voltage periodically. If more than a one (1) percent imbalance is found, report the finding to the public works office or other agency supplying power to the facility.

8.7.4.6 Low Voltage. Motors subjected to low voltage supply also tend to overheat. As the voltage decreases, the current increases, and it is the current that produces heat. Again, frequent monitoring of the system voltage

will warn of the condition. If voltage drops below five (5) percent of the nameplate rating, report it for correction.

8.7.4.7 High Voltage. High voltage can also cause motor burn-out. A voltage of more than ten (10) percent above the nameplate rating causes magnetic saturation of the iron in the motor stator, which causes current and temperature to rise. Because of closer design tolerances, newer motors are more susceptible than older equipment to over-voltage damage. Report a voltage check that shows five (5) percent or more over-voltage.

8.7.4.8 Short Cycling. This is the act of repeatedly starting a motor within a short time period. When a motor that has reached its normal operating temperature is subjected to frequent re-starts, the motor will become overheated very quickly. Faulty control devices such as pressure switches, flow switches, and thermostats can cause short cycling.

8.7.4.9 Loose Connections. Loose electrical connections in starters and motor terminal housings, especially where aluminum cable is used, can also cause overheating.

8.7.5 Maintenance for Electrical Motors. Refer to Table 33 for recommended operator and maintenance personnel procedures.

8.7.6 Troubleshooting for Electrical Motors. A large number of motor problems actually are the result of failures in the control circuit or improper alignment of either motor components or the motor with connected apparatus.

The following information is provided as an aid to effective inspection, recognition of unsatisfactory motor conditions or performance, and determination of the most desirable corrective action to be taken.

8.7.6.1 Induction Motors

a) Motor will not start.
   (1) Overload control trip.
   (2) Power not connected.
   (3) Faulty (open) fuses.
   (4) Voltage is too low.
   (5) Improper control connections.
   (6) Loose terminal-lead connection.
   (7) Driven machine locked.
   (8) Open circuit in stator winding.
   (9) Short circuit in stator winding.
   (10) Winding grounded.
   (11) Bearings are stiff.

Table 33
Recommended Operator and Maintenance Personnel
Procedures for Electrical Motors

FREQUENCY	OPERATOR PERSONNEL PROCEDURE
M	Enclosures and Air Passages. Examine external and internal cleanliness, structural support, corrosion, mechanical damage, moisture, obstructed air passages, free air circulation, and damaged internal parts.
FREQUENCY	**MAINTENANCE PERSONNEL PROCEDURE**
SA	Bearings. Inspect for proper lubrication, overheating, excessive vibration, noise, moisture, dirt, and correct end play.
A	Windings and Electrical Insulation. Look for dirt, moisture, lubricant deposits, insulation deterioration (overheating, cracking, brittleness, odor, abrasion), loose wedges, and motor lead condition. Ensure that insulation resistance testing is done by qualified personnel.
A	Air Gap. Ensure that there is uniformity in all quadrants of the air gap between the rotor and stator to within ten (10) percent tolerance.
A	Rotor. Identify any loose or broken bars and overheating.
A	Brushes. Examine for proper seating, good connections, wear, chipped toes and heels, cracked brush holders, and pigtails.
A	Commutators and Collector Rings. Check for roughness, wear, high or low bars, proper undercutting of mica, roundness, eccentricity, sparking, and neutral position adjustment of brushes.

(12) Grease is too stiff; use special lubricant for special conditions.
(13) Faulty control overload.

b) Motor is noisy.
(1) Motor is running on single-phase.
(2) Electrical load is unbalanced.
(3) Shaft is bumping (sleeve-bearing motors).
(4) Vibration from unbalanced driven machine.
(5) Air gap not uniform; check the rotor and bearings.
(6) Noisy ball bearings.
(7) Loose punchings, or loose rotor on shaft.
(8) Rotor rubbing on stator.
(9) Objects caught between fan and end shields.

(10) Motor loose on foundation.
(11) Coupling loose.

c) Motor is at higher than normal temperature or smoking.
(1) Overload.
(2) Electrical load unbalance (fuse blown, faulty control, etc).
(3) Ventilation is restricted.
(4) Incorrect voltage and frequency.
(5) Motor is stalled by driven machine or by tight bearings.
(6) Stator winding is shorted.
(7) Stator winding is grounded.
(8) Rotor winding has loose connections.
(9) Belt is too tight.
(10) Motor is used for rapid-reversing service.

d) Bearings are hot.
(1) Too much grease.
(2) Wrong grade of grease.
(3) Insufficient amount of grease.
(4) Foreign material is in grease.
(5) Bearings are misaligned.
(6) Bearings are damaged (corrosion, etc.).
(7) End shields are loose or not properly replaced.
(8) Excessive belt tension or excessive gear side thrust.
(9) Shaft is bent.

e) Sleeve bearings are hot.
(1) Insufficient amount of oil.
(2) Foreign materials in oil or poor grade of oil.
(3) Oil rings are rotating slowly or not rotating at all.
(4) Rings are bent or otherwise damaged in re-assembling.
(5) Ring is out of slot (oil-ring retaining clip is out of place).
(6) Motor is tilted too far.
(7) Motor is tilted, causing end thrust.
(8) Defective bearings or rough shaft.

f) Wound-rotor motor problems.
(1) Wires to control are too small.

g) Rotor runs at low speed with external resistance cut out.
(1) Control is too far from motor.
(2) There is an open circuit in the rotor circuit (including cable to control).
(3) Brushes are sparking; adjust commutation.
(4) Dirt caught between brush and ring.
(5) Brushes are stuck in holders.
(6) Brush tension is incorrect.
(7) Rough collector rings.
(8) Eccentric rings.
(9) Excessive vibration from unbalanced motor.
(10) Current density of brushes is too high (overload).

8.7.6.2 DC Motors

a) Motor will not start.
   (1) There is an open circuit in the control; check control for open starting resistor, open switch, or burned fuse.
   (2) Terminal voltage is too low.
   (3) Bearing is frozen.
   (4) Overload.
   (5) Excessive friction.
b) Motor stops running after a short time.
   (1) Motor is not getting power; check voltage at motor terminals, and check clips and overload relay.
c) Motor attempts to start, but overloads.
   (1) Motor is started with weak or no field; check rheostat, field coils, and wiring.
   (2) Motor torque is insufficient to drive load.
d) Motors runs too slowly under load.
   (1) Line voltage is too low.
   (2) Brushes are set ahead of neutral.
   (3) Overload.
e) Motor runs too fast under load.
   (1) Weak field; check for resistance in shunt-field circuits and for grounds.
   (2) Line voltage is too high.
   (3) Brushes are set back of neutral.
f) There is sparking at brushes.
   (1) Commutator is in bad condition; clean and reset brushes.
   (2) Commutator is rough or eccentric.
   (3) Excessive vibration; balance armature and check brushes to make sure they ride freely in holders.
   (4) Brush-holder spring is broken or acting sluggish.
   (5) Brushes are too short.
   (6) Machine is overloaded.
   (7) There is a short circuit in the armature; check the commutator and remove any metal particles between segments. Also check for short between adjacent commutator risers, and internal shorts in armature and repair.
g) Brush is chattering or making hissing noise.
   (1) Excessive clearance of brush-holders.
   (2) Brush is at incorrect angle.
   (3) Incorrect brushes for the service.
   (4) Mica is too high.
   (5) Brush-spring pressure is set incorrectly.
h) Motor will not come up to speed.
   (1) Excessive load.
   (2) Voltage is too low.

(3) Field is excited; be sure field-applying contactor is open, and field-discharge contactor is closed through discharge resistance.

i) Poor commutation
   (1) Insufficient brush-spring pressure.

j) One brush takes more load than it should.
   (1) Unbalanced circuits are in armature.

k) Excessive sparking.
   (1) Brush fits poorly on commutator.
   (2) Brushes are binding in the brush-holder.
   (3) There is insufficient or excessive pressure on the brushes.
   (4) Brushes are set off neutral.

l) Sparking at light loads.
   (1) There is paint spray, chemical, oil or grease, or other foreign material on the commutator.

m) Field coils overheat.
   (1) Short circuit between turns or layers; replace defective coil(s).

n) Commutator overheats.
   (1) Brushes are set off neutral, or they overload.
   (2) There is excessive spring pressure on the brushes.

o) Commutator is grooving.
   (1) Brushes are not properly staggered.

p) Brushes wear rapidly.
   (1) Commutator is rough.
   (2) Excessive sparking; line brushes with commutating fields.

q) The armature overheats.
   (1) Motor is overloaded.
   (2) Motor is installed in location where the ventilation is restricted.
   (3) Armature winding shorted; check commutator, and remove any metallic particles between segments. Also, test for internal shorts in armature and repair.

APPENDIX A

NAVY FOOD SERVICE EQUIPMENT SUPPLIERS AND DISTRIBUTORS

Military Specifications Promulgated by Military Departments/Agencies Under Authority of Defense Standardization Manual 4120-3-M

CODE	NAME AND ADDRESS
57591	Ace Enterprises Inc., 820 NW 144th St., Miami, FL 33168
00162	ACME Electric Heating Corp., 4685 E 11th Ave., Hialeah, FL 33013
19561	Adamation Inc., 87 Adam St., Newton, MA 02195
57565	Advance Cooler Mfg Corp., Rt 146, P.O. Box 387, Clifton Park, NY 12065
80487	Alco Dispensing Systems, Div. Alco Foodservice Equipment Co., Wicket St., Pine Meadow, CT, 06061
92435	Alco Standard Corp., Alco Foodservice Equipment Co., Alto Dispensing Systems Div., 455 E Kehoe Carol Stream, IL 60187
53091	Alto Shaam Inc., W164-N9221 Water St., P.O. Box 450, Menomonee, WI 53051
96325	Amana Refrigeration Inc., Sub of Raytheon Co., Main St., Amana, IA 52203
02594	American Metal Ware Co., 1835 Raymond Dr., Northbrook, IL 60062
19677	American Permanent Ware Co., P.O. Box 26070, Dallas, TX 75226 (Factory Located At 729 Third Ave., Dallas, TX 75224)
84919	AMF Inc., Food Service Div., Plains Rd., Essex, CT 06426
66745	AMF Wyott Inc., 1938 Wyatt Dr., P.O. Box 1188, Cheyenne, WY 82001
03500	Anetsberger Bros Inc., 200 Anets Dr, Northbook, IL 60062
70611	Ark-Les Corp., 51 Water, Watertown, MA 02172
32061	Atlas Metal Industries Inc., 1135 NW 159th Dr., Miami, FL 33169

APPENDIX A (Continued)

CODE	NAME AND ADDRESS
53423	Automation D S S Inc., 204 S Center St., Santa Ana, CA 92703
53600	Avant Industries Inc., 190 Shepard Ave., Wheeling, IL 60090
03824	Bailey Refrigeration Co. Inc., 74 Sullivan, Brooklyn, NY 11231
28095	Bakers Pride Oven Co. Inc., 30 Pine St., New Rochelle, NY 10801
66009	Bangor Cooler Co. Inc., 200 Dunbar St., Hardford, MI 49057
15436	Baron Industries, Div. of Xelco Corp., Sumner, WA
82971	Bastian Blessing Co. Inc., 422 N Griffin St., Grand Haven, MI 49417
33443	Basic American Food Co., Bank of America Ctr., Suite 4600, 555 California St., San Francisco, CA 94104
55392	Bayonne Stainless Products, 98 Ave E, Bayonne, NJ 07002
06793	Belshaw Bros Inc., 1750 22nd Ave S, Seattle, WA 98144
20081	Bendix Forest Products Corp., American Box Div., 12740 Lakeland Rd., P.O. Box 2448, Santa Fe Springs, CA 90670
61482	Berkel Inc., 1 Berkel Drive, Laporte, IN 46350
11403	Best Coffee Maker Div., Vacuum Can Co., 3100 W 36th St., Chicago, IL 60632
54369	Beverage-Air, a Co. of Tannetics Inc., Interstate 85, P.O. Box 5932, Spartanburg, SC 29304
07385	Biro Mfg Co., 1114 Main St., Marblehead, OH 43440
07581	Blakeslee G S and Co., 1844 S Laramine, Cicero, IL 60650
07657	Blickman Casework and Design Corp., 530 Gregory Ave., Weehawken, NJ 07087
57677	Blickmann Equipment Corp., 2017 Kerrigan Ave., Union City, NJ 07087

APPENDIX A (Continued)

CODE	NAME AND ADDRESS
07695	Blodgett G S Co. Inc., 50 Lakeside Ave., Burlington, VT 05401
66935	Borg-Warner Corp., York Div., Grantley Rd., P.O. Box 1592, York, PA 17405
08417	Brandt Inc., 705 S 12th Ave., Watertown, WI 53094
25628	Bunn-O-Matic Corp., 1400 Stevenson Dr., Springfield, IL 62708
56917	C N C Co., 3541 Rockbirdge Rd., Avondale Estates, GA 30002
53207	Caddy Corp. of America, Subsidiary of the Rockaway Corp., 711 Caddy Dr., Pitman, NJ 08071
13305	Cam Industries Inc., 18250 68th Ave. S Kent, WA 98031
59087	Capitol Coolers Inc., 801 S 10th St., Harrisburg, PA 17104
80681	Capitol Refrigeration Industries Co., 6700 Huntley Rd., Columbus, OH 43229
59921	Catalox Corp., Sani-Serv Div., 5756 Dividend Rd., Indianapolis, IN 46241
01137	Cecilware Corp., 43-05 20th Ave., Long Island City, NY 11106
11520	Champion Industries Inc., 3725 N Patterson Ave., P.O. Box 4149, Winston Salem, NC 27105
11562	Champion Machinery Co., 210 S Center, Joliet IL 60436
13059	Cleveland Range Co., Div. of Alco Foodservice Equipment Co., 1333 E 179th St., Cleveland, OH 44110
13401	Colborne Mfg Co., 1879 Chestnut Ave., Glenview, IL 60025
80309	Coleman Co. Inc., 250 N St., Francis Wichita, KS 67201
65504	Commercial Components, Redlands, CA 92374
64369	Commercial Fixture Co. Inc., 2330 Yandes St., P.O Box 55567, Indianapolis, IN 46205

APPENDIX A (Continued)

CODE	NAME AND ADDRESS
53200	Comstock Castle Stove Co., 731 S Front St., Quincy, IL 62301
12121	Conolly Roll-A-Grill Corp., 12 First St., Pelham, NY 10803
28233	Continental Refrigerator Corp., P.O. Box 377, Media, PA 19063
51267	Cornelius Co. The, 2727 N Ferry St., Anoka, MN 55303
14718	Cory Service Center, 2560 N Elston Ave., Chicago, IL 60647
53214	Crathco Inc., 480 Naponset St., Canton, MA 02021
72346	Crescent Metal Products Inc., 12711 Taft Ave., Cleveland, OH 44108
16500	Crimsco Inc., 5001 E 59th, Kansas City, MO 64130
38537	Crown Good Service Equipment Ltd., 70 Oakdale Rd., Downsview, Ont, Can M3N 1V9
62516	Custom Good Equipment Fabricators Inc., 2895 S Raritan, Englewood, CO 80110
91641	Debevoise Company, The, 74 20th St., Brooklyn, NY 11232
13873	Defense General Supply Center, Richmond, VA 23297
13208	Delta Southern Co. Inc., 1435 Choclaw Dr., P.O. Box 3034, Baton Rouge, LA 70821
17068	Despatch Ove Co., Div. of Despatch Industries Inc., P.O. Box 1320, Minneapolis, MN 55440
16599	Dhorb Co. Inc., Rd #1, Box 140, Hudson, NY 12534
26465	Dover Corp., Groen Div., 1900 Pratt Blvd Elk, Grove Village, IL 60007
91648	Dripcut Corp., 400 Rutherford St., P.O. Box 5, Goleta, CA 93017
19939	Dutch Bakers Machinery Co., Inc., 1101 John Ave., Superior, WI 54880

APPENDIX A (Continued)

CODE	NAME AND ADDRESS
19177	Ebco Mfg Co., 265 N Hamilton Rd., Columbus, OH 43213
53977	Economics Laboratory Inc., 3452 E Foothill Blvd., Pasadena, CA 91107
85884	Economics Laboratory Inc., Osborn Bldg, 370 Wabasha St., St Paul, MN 55102
59397	Elkay Mfg Co., 105 N Rochester St., Lanark, IL 61046
16101	Elliott Williams Co. Inc., 200 N Richardt, Indianapolis, IN 46219
60569	Elmbrook Refrigeration Inc., 21000 Enterprise Ave., Brookfield, WI 53005
96618	EPCO Products, an Affiliate of United Service Equipment, A Div. of Standex International Corp., 1152 Park Ave., Murfreesboro, TN 37130
58536	Federal Commercial Item Description, Promulgated By General Services Administration, Washington, DC
81348	Federal Specifications, Promulgated by GSA, Washington, DC
55971	Ferro Mechanical Corp., 321 Sherman Ave., Newark Essex, NJ 07114
21861	Follett Corp., Kesslerville Rd., Easton, PA 18042
90456	Food Equipment Corp., 400 Humboldt, St. Louis, MO 63147
89729	Foster Refrigerator Corp., Mill and North Second Streets, Hudson, NY 12534
23287	Fostoria Industries Inc., 1200 N Main St., P.O. Box E, Fostoria, OH 44830
25009	Franklin Products Corp., 910 Skokie Blvd., Northbrook, IL 60062
15752	Frigitemp Corp., 52 Vanderbilt Ave., New York, NY 10017
95284	Frymaster Corp., The 5000 Hollywood Ave., Shreveport, LA 71108

APPENDIX A (Continued)

CODE	NAME AND ADDRESS
53506	Garland Commercial Industries Inc., 185 South St., Freeland, PA 18224
89063	Garland Mfg Co., 53 Water Street, Saco, ME 04072
60065	Geldback Refrigerator Co., Inc., Demaresk Rd., P.O. Box 276, Sparta, NJ 07971
24617	General Motor Corp., 3044 Grand Blvd., W Detroit, MI 48202
95683	General Stores Supply Office, Philadelphia, PA
07669	Glenco Refrigeration Co., Div. of J P Heilweil Industries, LTD, 8000 Penrose Ave., Philadelphia, PA 19153
65252	Glenn Electric Sales Corp., Linden, NJ 07036
25168	Globe Slicing Machine Co., Inc., 224 Selleck St., Stamford, CT 06904
25278	Gloekler Refrigerator Co., P.O. Box 1154, Erie, PA 16512 (Factory Located At 3950 W 20th, Erie, PA 16505)
53473	Grumman Boats, Div. of Grumman Allied Inc., 20 Front St., Marathon, NY 13803
91764	Heat Exchangers Inc., 8100 N Monticello Ave., Skokie, IL 60076
28716	Hill Shaw Co., 311 N Desplaines St., Chicago, IL 60606
60438	Hobart Chicago Heights Inc., Div. Hobart Corp., 14th and Arnold Sts., Chicago Heights, IL 60411
34133	Hobart Corp. Food Service, 401 Funston Rd., Kansas City, KS 66115
28873	Hobart Corp., World Headquarters, Ridge Ave., Troy, OH 45374
01161	Hollymatic Corp., 80 North St., Park Forest, IL 60466
58033	Holman Group Inc., the Lund, P.O. Box 880, Saco, ME 04072

APPENDIX A (Continued)

CODE	NAME AND ADDRESS
03205	Howard Refrigerator Co. Inc., Grant Ave. and Blue Grass Rd., Philadelphia, PA 19114
81139	Hussmann Refrigerator Co., 12999 St. Charles Rock Rd., Bridgeton, MO 63044
30793	Insinger Machine Co., 6245 State Rd., Philadelphia, PA 19135
28849	International Edge Tool Co., P.O. Box P, Roseland, NJ 07068
17228	Jackson Products Co., Tempa Industrial Park, P.O. Box 9275, Tampa, FL 33674
29897	Jet Spray Corp., 195 Bear Hill Rd., Waltham, MA 02154
15498	Jet Spray Corp., Jet Spray Customer Services Div., 195 Bear Hill Rd., Waltham, MA 02154
15905	Jetspray Products Inc., 6308 Riverdale St., San Diego, CA 92120
91823	Jordon Commercial Refrigerator Co., Div. Fogel Commercial Refrigerator Co., 5400 Eadorn St., Philadelphia, PA 19137
58409	Kenco Products Corp., 153 S Dean St., P.O. Box 630, Englewood, NJ 07531
28447	Kessel Kitchen Equipment Co., Inc., Rt. 1, P.O. Box 5533, Trenton, NJ 08638
63136	Keyser Stainless Corp., Industrial Pk. at Waxier Rd., P.O. Box 487, Keiper, WV 26726
27275	Kold Pack Inc., 5014 Page Ave., Jackson, MI 49201
18947	L and A Products Inc., 655 W County Rd. E, St. Paul, MN 55112
87203	Lagerquist Gust and Sons Inc., 614 N Bradford Ave., Minneapolis, MN 55411
60945	Lan Food Service Equipment Inc., 55 Accord Park Dr., Rockland, MA 02043

APPENDIX A (Continued)

CODE	NAME AND ADDRESS
94023	Lane Mfg Co. Inc., 3601 Clipper Mill Rd., Baltimore, MD 21211
82523	Lang F W Co., 322 Berkley Ave., Clifton Heights, PA 19018
34931	Lang Mfg Co., 9040 Willows Road, Redmond, WA 98052
35177	Lasar Mfg Co., Inc., 2540 E 114th, Los Angeles, CA 90059
35550	Legion Utensils Co. Inc., Interstate West Office Park, P.O. Box 4300, Augusta, GA 30907
26320	Lern Inc., 847 N Troy St., Chicago, IL 60622
36517	Liquid Carbonic Corp., A Subsidiary of Houston Natural Gas Corp., 135 S La Salle St., Chicago, IL 60603
22230	Litton Microwave Cooking Products Div., Litton Systems Inc., 1405 Xenium Lane, South Minneapolis, MN 55441
36659	Lockhead Corp., Lockheed California Co. Div., 2555 N Hollywood Way, P.O. Box 551, Burbank, CA 91520
98897	Lockheed Corp., Lockheed Georgia Co. Div., 86 S Cobb Dr., Marietta, GA 30063
09791	Low Temp Mfg Co. Inc., P.O. Box 795, Jonesboro, GA 30236
61173	Lowensten W W, 21 Park Ave., Newark, NJ 07104
52956	M and M Refrigeration and Engineering Corp., 2239 Yates Ave., Los Angeles, CA 90040
56801	M and S Products Corp., 320 Elizabeth Ave., Newark, NJ 07112
94965	Magic Chef Inc., 740 King Edward Ave. SE, Cleveland, TN 37311
26641	Manitowac Co. Inc., Manitowac Equipment Div., 2110 S 26th St., Manitowac, WI 54220
57406	Manitowoc Co. Inc., 500 S 16th St., P.O. Box 66, Manitowoc, WI 54220
38379	Market Forge Co., 35 Garvey, Everett, MA 02149

APPENDIX A (Continued)

CODE	NAME AND ADDRESS
39130	McCall Refrigerator, Div. of Kolpak Industries Inc., Industrial Park, P.O.Box 217, Parsons, TN 38363
78770	McGraw-Edison Co., Food Equipment Div., 401 Washington St., Algonquin, IL 60102
92436	McGraw-Edison Co., Food Equipment Div., 200 W Germantown Pike, Plymouth Meeting, PA 19462
56023	McGraw-Edison Co., Southern Equipment Co. Div., 4550 Gustine Ave., P.O. Box 7116, St Louis, MO 63177
87110	McMahon R S Co., Chicago, IL
39433	Mcquay-Perfex Inc., McQuay Group, 13600 Industrial Pk Blvd., P.O. Box 1551, Minneapolis, MN 55440
46529	McQuay Perfex Inc., P.O. Box 1551, Minneapolis, MN 55440
94674	McQuay Perfex Inc., Perfex Group, 500 W Oklahome Ave., Milwaukee, WI 53207
11718	Mgr Equipment Corp., 22 Gates Ave., Inwood, NY 11696
53853	Mid South Industries Inc., Meridan Ave. and 21st Street, P.O. Box 989, Laurel, MS 39440
40275	Middleby-Marshall Inc., 8300 Austin Ave., Morton Grove, IL 60053
30130	Mile High Equipment Co., 545 Santa Fe Dr., Denver, CO 80204
81349	Military Specifications, Promulgated by Military Departments/Agencies Under Authority of Defense Standardization Manual 74120 3-M
16957	Moline Co., 114 S Central Ave., Duluth, MN 55807
41336	Montague Co., The, 1830 Stearman Ave., Hayward, CA 94545
07193	Morley Mfg Co. Inc., DBA Majestic Range Works, South 6th St, P.O. Box 139, Mascoutah, IL 62258

APPENDIX A (Continued)

CODE	NAME AND ADDRESS
64111	Muckler Industries Inc., 4180 Hossmeister Ave., St Louis, MO 63125
50671	Multiplex Co. Inc., 4153 Bingham Ave., St Louis, MO 63116
20087	Natco Corp., 635 S 28th St., Milwaukee, WI 53215
56703	National Foodline Corp., 21400 Hamburg Ave., Lakeville, MN 55044
23372	Neico Microwave Co., 105 South St., Hopkinton, MA 01748
31324	Nelson C Mfg Co., Div. of Northern Mfg Co., 132 Railroad St., Oak Harbor, OH 43449
43154	Nelson C Mfg Co., St Louis, MO
21692	Nestle Co. The, 2551 Fernwood Ave.- Lynwood Ave., Lynwood, CA 90262
21880	Norris Dispenser Co., 13430 County Rd. No 6, Plymouth, MN 55441
28535	Nortake Mfg Co., 721 Bond St., P.O. Box 215, Elyria, OH 44035
44769	Oliver Machinery Co., 445 6th N W, Grand Rapids, MI 49504
60585	Oliver Products Co., 445 Sixth St. NW, P.O. Box 1167, Grand Rapids, MI 49501
46270	Peerless Stove and Mfg Co., Inc., Adams Harrison Sts., P.O. Box 859, Sandusky, OH 44870
65186	Phoenix Ltd., 1124 Collidge Ave., National City, CA 92050
47467	Pitman J C and Sons Inc., 89-93 Bow N H, P.O. Box 501, Concord, NH 03301
09065	Precision Metal Products Inc., 6600 NW 74th Ave., P.O. Box 522010, Miami, FL 33152
90683	Progressive Corp., 101 Buck Rd., P.O. Box 288, Feasterville, PA 19047

APPENDIX A (Continued)

CODE	NAME AND ADDRESS
49262	Puffer Hubbard Refrigerator Co., Grand Haven, MI
89092	Qualheim Inc., 1225 14th St., Racine, WI 53401
49524	Queen Products, Div. of King Seeley Thermos Co., 505 Front St., Albert Lea, MN 56007
57519	R S P Industries Inc., 329 Herzi St., Brooklyn, NY 11212
24927	Raburn Products, a Div. of Economics Laboratory Inc., 4 Corporate Park Dr., White Plains, NY 10604
12186	Rainbow Machine Products Inc., 226 Wills Rd., P.O.Box 1906, York, PA 17405
49736	Rainer Oven Corp., 1419 So Jackson, Seattle, WA 98144
56361	Redco Inc., 1920 Huttonf St., Wilmington, DE 19802 2514
79092	Reed Industries Inc., Victor Products Div., 775 Fredrick St., P.O. Box 150, Hagerstown, MD 21740
86740	Refrigeration Supply Co. Inc., 907 Barry Place NW, Washington, DC 20001-5075
60266	Reliance Electric Co., Toledo Scale Div., 5225 Telegraph Rd., Toledo, OH 43623
50703	Reynolds Electric Co., 1800 Madison St., Maywood, IL 60153
57716	Reynolds Products Inc., 2401 Palmer Dr., Schaumburg, IL 60196
62699	Richner Engineering Co., Ames, IA 50010
58678	Sage Systems Inc., 7400 Deering Ave., Canoga Park, CA 91303
04742	Sani-Serv Div., Burger Chef Systems Inc., Indianapolis, IN
86875	Sanitory Scale Co., 910E Lincoln Ave., Belvidere, IL 61008
53205	Savory Equipment Inc., 349 Essex Rd., P.O. Box 610, Neptune, NJ 07753

APPENDIX A (Continued)

CODE	NAME AND ADDRESS
53354	Schmidt C Co., 11400 Grooms Rd., Cincinnati, OH 45242
50689	Schneider Metal Mfg Co. Inc., Ross Temp Div., 2421 15th St. SW, Mason City, IA 50401
26933	Scovill Inc., Hamilton Beach Div., Rt 17 North, P.O. Box 1158, Washington, NC 27889
53800	Sears Roebuck & Co., 403 S State, Chicago, IL 60605
04793	Serv-A-Slice Industries, 2375 American Lane, Elk Grove Village, IL 60007
53987	Serv-Queen Inc., 605 Fentress Blvd., Daytona Beach, FL 32014
24626	Shelley Mft Co., 4225 N W 72nd Ave., P.O. Box 440308, Miami, FL 33166
12884	Silver King Div., Stevens Lee Co., 1600 Xenium Lane N, Minneapolis, MN 55441
01703	Silver Refrigeration Mfg Corp., Brooklyn, NY
30617	Snowbird Industries Inc., 1525 W Kennedy Blvd., Tampa, FL 33606
57867	Somerset Machine and Tool Co., Inc., 37 Allen St., Sommerville, MA 02143
37936	South Bend Range Corp., 201 S Cherry St., South Bend, IN 46627
56170	Specialities Appliance Co., 5939 S Lowe Ave., Chicago, IL 60621
57135	Star Metal Co., Div. of J P Heilweil Industries Ltd., 4700 Island Ave., Philadelphia, PA 19153
90362	Star Mfg Co., Div. Peabody International Corp., 9325 Olive St., Rd., St Louis, MO 63132
18789	State Machine Products Inc., 22 Warsaw Rd., Dry Ridge, KY 41035
50070	Stein Sam Associates Inc., 1622 First St., Sandusky, OH 44870

APPENDIX A (Continued)

CODE	NAME AND ADDRESS
92363	Stero Dishwashing Machine Mfg Co., 3200 Lakeville Highway, P.O. Box 219, Petaluma, CA 94952
57762	Stimpson Computing Scale Co., Inc., 829-837 Logan St., Louisville, KY 40204
11938	Sunbeam Corp., 5400 W Roosevelt Ave., Chicago, IL 60650
53948	Superior Products Mfg Co., Box 3177, St Paul, MN 55165 (Facility located at 520 W Country Rd D, Brighton, MN 55112)
90581	Sweden Freezer Mfg Co., 3401 17th Ave W, Seattle, WA 98119
20596	Sweden Freezer Mfg Co., 401 W Town St., P.O. Box 23321, Columbus, OH 43223
26442	Sylvania Electric Products Inc., Sylcor Div., Hicksville, NY
62291	Tafco Inc., 199 New Texas Rd., Pittsburgh, PA 15239
80739	Taylor Freezer Div., Beatrice Food Co., Blackhawk Blvd., Rockton, IL 61072
83099	Technicraft Corp., 1107-09 Forest, Kansas City, MO 64106
28773	Texas Carbide Mfg Co., P.O. Box 8616, Houston, TX 77009
59807	Thompson Emery Machine and Supply, 1349 Inwood Ave., Bronx, NY 10452
60105	Toastswell Co., The, 620-644 Tower Grove Ave., St Louis, MO 63110
87929	Tower Olschan Corp., 15 Dewey St., Bridgeport, CT 06605
88715	Traulsen and Co. Inc., 114-02 15th Ave., College Point, NY 11356
60817	Triumph Mfg Co., P.O. Box 44130, Cincinnati, OH 45244
22315	Turbo Refrigerating Co. Inc., 1515 Shady Oaks Dr., P.O. Box 396, Denton, TX 76201

APPENDIX A (Continued)

CODE	NAME AND ADDRESS
99414	Tyles Refrigeration Corp., 1329 Lake St., Niles MI 49120
60947	Ultra-Heat Corp., 835-2 Industrial Hwy, P.O. Box 166, Cinnaminson, NJ 08777
61633	Uniflow Mfg Co., 1525 E Lake Rd., P.O. Box 1415, Erie, PA 16512
52494	Universal/Nolin, Div. of UMC Industries Inc., Hwy 65 S and Robins St., P.O. Box 909, Conway, AR 72032
95219	Univex Corp., 3 Old Rockingham Rd., Salem, NH 03079
86735	UOP Inc., Aerospace Div., 2750 Dawn Rd., Jacksonville, FL 32207
23792	US Range Co., 14501 S Broadway, Gardena, CA 90247
58712	USECO, An Affiliate of United Service Equipment Co., 1152 Park Ave., Murfreesboro, TN 37130
62565	Vacuum Can Co., 3100 W 36th St., Chicago, IL 60632
64578	Victory, Div. of Bastian Advanced System Inc., 200 W Germantown Pike, Plymouth Meeting, PA 18462
65314	VLM Industries Inc., Monty Box Div., 116 Farmville Rd., P.O. Box 167, Memphis, TN 38101
63277	Vollrath Co., The, 1236 N 18th St., Sheboygan, WE 53081
89565	Vulcan-Hart Corp., P.O. Box 696, Louisville, KY 40201
89564	Vulcan-Hart Corp., 3600 North Point Blvd., Baltimore, MD 21222
87406	Warner Vaugham Co., Hauerford, PA
94074	Washington Equipment Co., Inc., 208 19th Ave., P.O. Box 2267, Paterson, NJ 07509
79209	Washington Stove Works, 3402 22 Smith Ave., P.O. Box 687, Everett, WA 98201
17258	Welbilt Corp., 57-16-18 Flushing Ave., Maspeth, Long Island, NY 11378

APPENDIX A (Continued)

CODE	NAME AND ADDRESS
03411	Weldbilt Mfg Co., 5615 E Leeds, South Gate, CA 90280
87446	Wells Commercial Cooking, 925 Linden Ave., P.O. Box 2027 South, San Francisco, CA 94080
87466	Western Brass Works, 1440 N Spring St., Los Angeles, CA 90012
23671	White Consolidated Industries Inc., Frigidaire Div., 3555 Kettering Blvd., P.O. Box WC 4900, Dayton, OH 45449
16637	Wilder Mfg Co., Inc., 41 Mechanic Port, Jeruis, NY 12771

REFERENCES

NOTE: THE FOLLOWING REFERENCED DOCUMENTS FORM A PART OF THIS HANDBOOK TO THE EXTENT SPECIFIED HEREIN. USERS OF THIS HANDBOOK SHOULD REFER TO THE LATEST REVISIONS OF CITED DOCUMENTS UNLESS OTHERWISE DIRECTED.

NAVY MANUALS, P-PUBLICATIONS, AND MAINTENANCE OPERATING MANUALS:

NAVFACENGCOM MO-117	Maintenance of Fire Protection Systems
NAVFAC MO-321	Facilities Management
NAVFACENGCOM P-717	Preventive/Recurring Maintenance Handbook
NAVSUP PUB 421	Food Service Operation

(Available from the Naval Publications and Forms Center (NPFC), ATTN: Cash Sales, Code 1051, 5801 Tabor Avenue, Philidelphia, PA 19120-5099.)

NAVY DEPARTMENT INSTRUCTIONS:

NAVAL MEDICAL COMMAND (NAVMEDCOM)

NAVMEDCOM	Manual of Naval Preventive Medicine

(Available from Commanding Officer, Naval Publications and Forms Center (NPFC), ATTN: Code 3015, 5801 Tabor Avenue, Philidelphia, PA 19120-5099.)

OTHER GOVERNMENT DOCUMENTS AND PUBLICATIONS:

OCCUPATIONAL SAFETY AND HEALTH ADMINISTRATION (OSHA)

OSHA 29 CFR 1910.147	Sources of Standards

(Unless otherwise indicated, copies are available from Superintendent of Documents, U.S. Government Printing Office, Washington, DC 20402.)

NON-GOVERNMENT PUBLICATIONS:

National Sanitation Foundation Standards

(Unless otherwise indicated, copies are available from the National Sanitation Foundation, 3475 Plymouth Road, P.O. Box 1468, Ann Arbor, MI 48106.)

CUSTODIAN
NAVY - YD

PREPARING ACTIVITY
NAVY - YD

PROJECT NO.
FACR-1060

STANDARDIZATION DOCUMENT IMPROVEMENT PROPOSAL

INSTRUCTIONS

1. The preparing activity must complete blocks 1, 2, 3, and 8. In block 1, both the document number and revision letter should be given.
2. The submitter of this form must complete blocks 4, 5, 6, and 7.
3. The preparing activity must provide a reply within 30 days from receipt of the form.

NOTE: This form may not be used to request copies of documents, nor to request waivers, or clarification of requirements on current contracts. Comments submitted on this form do not constitute or imply authorization to waive any portion of the referenced document(s) or to amend contractual requirements.

I RECOMMEND A CHANGE:	1. DOCUMENT NUMBER MIL-HDBK-1119	2. DOCUMENT DATE (YYMMDD) 91/08/30

3. DOCUMENT TITLE
FOOD SERVICE EQUIPMENT

4. NATURE OF CHANGE (*Identify paragraph number and include proposed rewrite, if possible. Attach extra sheets as needed.*)

5. REASON FOR RECOMMENDATION

6. SUBMITTER

a. NAME (*Last, First, Middle Initial*)	b. ORGANIZATION	
c. ADDRESS (*Include Zip Code*)	d. TELEPHONE (*Include Area Code*) (1) Commercial (2) AUTOVON (*If applicable*)	7. DATE SUBMITTED (*YYMMDD*)

8. PREPARING ACTIVITY

a. NAME Commander Naval Facilities Engineering Command	b. TELEPHONE (*Include Area Code*) (1) Commercial (2) AUTOVON (215) 897-6688
c. ADDRESS (*Include Zip Code*) Code 164 Philadelphia, PA 19112-5094	IF YOU DO NOT RECEIVE A REPLY WITHIN 45 DAYS, CONTACT: Defense Quality and Standardization Office 5203 Leesburg Pike, Suite 1403, Falls Church, VA 22041-3466 Telephone (703) 756-2340 AUTOVON 289-2340