UFC 3-320-07N
16 January 2004

UNIFIED FACILITIES CRITERIA (UFC)

WEIGHT HANDLING EQUIPMENT

APPROVED FOR PUBLIC RELEASE; DISTRIBUTION UNLIMITED

UNIFIED FACILITIES CRITERIA (UFC)

WEIGHT HANDLING EQUIPMENT

Any copyrighted material included in this UFC is identified at its point of use.
Use of the copyrighted material apart from this UFC must have the permission of the copyright holder.

U.S. ARMY CORPS OF ENGINEERS

NAVAL FACILITIES ENGINEERING COMMAND (Preparing Activity)

AIR FORCE CIVIL ENGINEERING SUPPORT AGENCY

Record of Changes (changes indicated by **1**\ ... /**1**/)

Change No.	Date	Location

FOREWORD

The Unified Facilities Criteria (UFC) system is prescribed by MIL-STD 3007 and provides planning, design, construction, sustainment, restoration, and modernization criteria, and applies to the Military Departments, the Defense Agencies, and the DoD Field Activities in accordance with USD(AT&L) Memorandum dated 29 May 2002. UFC will be used for all DoD projects and work for other customers where appropriate.

UFC are living documents and will be periodically reviewed, updated, and made available to users as part of the Services' responsibility for providing technical criteria for military construction. Headquarters, U.S. Army Corps of Engineers (HQUSACE), Naval Facilities Engineering Command (NAVFAC), and Air Force Civil Engineer Support Agency (AFCESA) are responsible for administration of the UFC system. Defense agencies should contact the preparing service for document interpretation and improvements. Technical content of UFC is the responsibility of the cognizant DoD working group. Recommended changes with supporting rationale should be sent to the respective service proponent office by the following electronic form: Criteria Change Request (CCR). The form is also accessible from the Internet sites listed below.

UFC are effective upon issuance and are distributed only in electronic media from the following sources:

- Unified Facilities Criteria (UFC) Index http://65.204.17.188//report/doc_ufc.html.
- USACE TECHINFO Internet site http://www.hnd.usace.army.mil/techinfo/index.htm.
- NAVFAC Engineering Innovation and Criteria Office Internet site http://criteria.navfac.navy.mil.
- Construction Criteria Base (CCB) system maintained by the National Institute of Building Sciences at Internet site http://www.nibs.org/ccb.

Hard copies of UFC printed from electronic media should be checked against the current electronic version prior to use to ensure that they are current.

AUTHORIZED BY:

DONALD L. BASHAM, P.E.
Chief, Engineering and Construction Division
U.S. Army Corps of Engineers

DR. JAMES W WRIGHT, P.E.
Chief Engineer
Naval Facilities Engineering Command

KATHLEEN I. FERGUSON, P.E.
The Deputy Civil Engineer
DCS/Installations & Logistics
Department of the Air Force

Dr. GET W. MOY, P.E.
Director, Installations Requirements and Management
Office of the Deputy Under Secretary of Defense (Installations and Environment)

CONTENTS

Page

CHAPTER 1 INTRODUCTION

Paragraph 1-1 PURPOSE AND SCOPE 1-1
1-2 APPLICABILITY 1-1
1-2.1 General Building Requirements 1-1
1-2.2 Safety 1-1
1-2.3 Fire Protection 1-1
1-2.4 Antiterrorism/Force Protection 1-1
1-3 REFERENCES 1-1

APPENDIX A MIL-HDBK 1038……...……..... A-1

CHAPTER 1

INTRODUCTION

1-1 **PURPOSE AND SCOPE**. This UFC is comprised of two sections. Chapter 1 introduces this UFC and provides a listing of references to other Tri-Service documents closely related to the subject. Appendix A contains the full text copy of the previously released Military Handbook (MIL-HDBK) on this subject. This UFC serves as criteria until such time as the full text UFC is developed from the MIL-HDBK and other sources.

This UFC provides general criteria for the design of weight handling equipment.

Note that this document does not constitute a detailed technical design, maintenance or operations manual, and is issued as a general guide to the considerations associated with the design of weight handling equipment.

1-2 **APPLICABILITY**. This UFC applies to all Navy service elements and Navy contractors; Army service elements should use the references cited in paragraph 1-3 below; all other DoD agencies may use either document unless explicitly directed otherwise.

1-2.1 **GENERAL BUILDING REQUIREMENTS**. All DoD facilities must comply with UFC 1-200-01, *Design: General Building Requirements*. If any conflict occurs between this UFC and UFC 1-200-01, the requirements of UFC 1-200-01 take precedence.

1-2.2 **SAFETY**. All DoD facilities must comply with DODINST 6055.1 and applicable Occupational Safety and Health Administration (OSHA) safety and health standards.

NOTE: All **NAVY** projects, must comply with OPNAVINST 5100.23 (series), *Navy Occupational Safety and Health Program Manual*. The most recent publication in this series can be accessed at the NAVFAC Safety web site: www.navfac.navy.mil/safety/pub.htm. If any conflict occurs between this UFC and OPNAVINST 5100.23, the requirements of OPNAVINST 5100.23 take precedence.

1-2.3 **FIRE PROTECTION**. All DoD facilities must comply with UFC 3-600-01, *Design: Fire Protection Engineering for Facilities*. If any conflict occurs between this UFC and UFC 3-600-01, the requirements of UFC 3-600-01 take precedence.

1-2.4 **ANTITERRORISM/FORCE PROTECTION**. All DoD facilities must comply with UFC 4-010-01, *Design: DoD Minimum Antiterrorism Standards for Buildings*. If any conflict occurs between this UFC and UFC 4-010-01, the requirements of UFC 4-010-01 take precedence.

1-3 **REFERENCES**. The following Tri-Service publications have valuable information on the subject of this UFC. When the full text UFC is developed for this

subject, applicable portions of these documents will be incorporated into the text. The designer is encouraged to access and review these documents as well as the references cited in Appendix A.

1. US Army Corps of Engineers
   Commander
   USACE Publication Depot
   ATTN: CEIM-IM-PD
   2803 52nd Avenue
   Hyattsville, MD 20781-1102
   (301) 394-0081 fax: 0084
   karl.abt@hq02.usace.army.mil
   http://www.usace.army.mil/inet/usace-docs/

   TI-809-02, Structural Design Criteria for Buildings, 01 September 1999
   P-307, Management of Weight Handling Equipment, 01 September 2000

APPENDIX A

MIL-HDBK 1038
WEIGHT HANDLING EQUIPMENT

INCH-POUND

MIL-HDBK-1038
06 MARCH 1998

SUPERSEDING
NAVFAC DM-38.01
AND CHANGE 1
OCTOBER 1986

DEPARTMENT OF DEFENSE
HANDBOOK

WEIGHT HANDLING EQUIPMENT

AMSC N/A AREA FACR

DISTRIBUTION STATEMENT A. Approved for public release; distribution is unlimited.

ABSTRACT

This handbook addresses the most prevalent varieties of cranes within the inventories of U.S. Navy shore facilities. There still remain many less common and some unique, one-of-a-kind cranes in service, which fall outside the practical scope of this handbook. The period of crane design extends from contemporary to the early 1940's.

The individual varieties of cranes included in this handbook are further grouped as "older" and "newer" types and as standard commercial and custom (built-up) designs.

The handbook begins with a non-technical description of the selected varieties of cranes and progresses to rigorous engineering methodology and design requirements for the main assemblies and their component parts. It is intended for the use of engineers proficient in the technical disciplines relevant to cranes, but not necessarily expert in all phases of crane design.

FOREWORD

NAVFACINST 11450.1 assigns to the Navy Crane Center (NCC) the authority and responsibility for the procurement, establishment and control of design standard, oversight of maintenance, and evaluation of all cranes at Navy shore facilities. The main objectives of this handbook are – to consolidate the current crane design criteria and practices; and to record past experience, use-proven successful practices, and design features of the older cranes. It is also intended to serve as a guide for engineers responsible for selecting and maintaining cranes, crane systems, and crane components.

This handbook uses, to the maximum extent feasible, national professional society, association, and institute standards in accordance with NAVFACENGCOM policy. Deviations from these criteria should not be made without prior approval of Navy Crane Center.

Design cannot remain static any more than the functions it serves or the technologies it uses. Accordingly, recommendations for improvement are encouraged from within the Navy, other Government agencies, and the private sector and should be furnished on the DD Form 1426 provided inside the back cover to Director, Navy Crane Center, 10 Industrial Highway, Lester, PA 19113-2090, phone (610) 595-0505.

DO NOT USE THIS HANDBOOK AS A REFERENCE DOCUMENT FOR PROCUREMENT OF CRANES. DO NOT REFERENCE IT IN MILITARY OR FEDERAL SPECIFICATIONS OR OTHER PROCUREMENT DOCUMENTS. USE IT FOR THE DEVELOPMENT OF TECHNICAL SPECIFICATIONS FOR THE DESIGN, CONSTRUCTION, AND INSTALLATION OF CRANES.

RELATED MANUALS AND INDUSTRY STANDARDS

Manual Activity	Title	PA
P-307	Management of Weight Handling Equipment	NAVFAC
P-355	Seismic Design for Buildings	NAVFAC
MIL-HDBK-1002/2	Loads	NAVFAC
MIL-HDBK-1005/6	Trackage	NORTHDIV
MIL-HDBK-1025/1	Piers and Wharves	LANTDIV
MIL-HDBK-1025/6	General Criteria for Waterfront Construction	LANTDIV
MIL-HDBK-1029/1	Graving Drydocks	NAVFAC
MIL-HDBK-1029/3	Drydocking Facilities Characteristics	NAVFAC
MIL-HDBK-1038/3	Yard Craft	WESTDIV
MIL-HDBK-1038/5	Towing Non Self-propelled Floating Structures	WESTDIV

WEIGHT HANDLING EQUIPMENT

CONTENTS

			Page
Section	1	INTRODUCTION	
	1.1	Scope	1
	1.1.1	Definitions	1
	1.1.2	Applicability to Older Cranes	1
	1.1.3	Applicability to Standard Commercial Items	1
	1.2	Cancellation	1
	1.3	Related Criteria	2
	1.4	Purpose of Related Criteria	2
Section	2	MAIN CRANE TYPES	
	2.1	Overhead Electric Traveling (OET) Cranes	3
	2.1.1	General Description	3
	2.1.2	Distinctive Features	3
	2.1.3	Industry Standards	3
	2.2	Underrunning Cranes	5
	2.2.1	Suspension Systems	5
	2.2.2	General Description	5
	2.2.3	Distinctive Features	6
	2.2.4	Industry Standards	6
	2.3	Cantilever Cranes	8
	2.3.1	General Description	8
	2.3.1.1	Stationary	8
	2.3.1.2	Traveling	10
	2.3.2	Distinctive Features	10
	2.3.3	Industry Standards	10
	2.4	Portal Cranes	10
	2.4.1	General Description	12
	2.4.2	Distinctive Features	15
	2.4.3	Industry Standards	15
	2.5	Floating Cranes	15
	2.5.1	General Description	15
	2.5.2	Distinctive Features	18
	2.5.3	Industry Standards	18
	2.6	Container Cranes	18
	2.6.1	General Description	19
	2.6.2	Distinctive Features	19
	2.6.3	Industry Standards	19
	2.7	Mobile Cranes	22
	2.7.1	General Description	22
	2.7.2	Distinctive Features	22
	2.7.3	Industry Standards	22
	2.8	Gantry and Semi-Gantry Cranes	22
	2.8.1	General Description	25
	2.8.2	Distinctive Features	25
	2.8.3	Industry Standards	25
Section	3	COMMERCIAL CRANES, MONORAIL HOISTS, AND LINE HANDLING MECHANISMS	
	3.1	Cranes	29
	3.1.1	Locomotive Cranes	29

Page
3.1.2 Pedestal and Revolving Gantry Cranes.....29
3.2 Monorail Systems.....29
3.3 Line Handling Mechanisms.....29
3.3.1 Capstans.....30
3.3.2 Windlasses.....30
3.3.3 Winches.....30

Section 4 DESCRIPTION OF ASSEMBLIES AND COMPONENTS
4.1 Structural.....31
4.1.1 Bridge Girders for OET, Gantry, and Semi-Gantry Cranes....31
4.1.1.1 Walkways.....32
4.1.2 End Trucks and End Ties for OET Cranes.....32
4.1.2.1 Wheel Base.....32
4.1.3 Bridge Girder-End Tie/End Truck Connections for OET Cranes32
4.1.4 Trolley Frames for OET Cranes.....33
4.1.5 Bridge Girders for Underrunning Cranes.....33
4.1.5.1 Outrigger Beams.....33
4.1.6 End Trucks.....33
4.1.7 Runways for Underrunning Cranes.....33
4.1.7.1 Runway Suspension Systems.....35
4.1.7.2 Extensions and Transfer Sections.....35
4.1.8 Cantilevered Booms.....35
4.1.9 Pillar Anchor Bolts.....36
4.1.10 Portal and Floating Crane Truss Booms.....36
4.1.11 Portal and Floating Crane Lattice Booms.....36
4.1.11.1 Struts.....37
4.1.12 Container Crane Booms.....37
4.1.12.1 Boom and Main Beam Stays.....37
4.1.13 Container Crane Main Beams.....37
4.1.14 Mobile Crane Fixed Length Boom.....38
4.1.14.1 Flying Jibs.....38
4.1.15 Mobile Crane Telescopic Booms.....38
4.1.16 A-Frames.....38
4.1.17 Machinery Decks.....39
4.1.18 Portal Bases.....39
4.1.19 Gantries and Semi-Gantries.....40
4.1.20 Floating Crane Tub Structures.....40
4.1.21 Portal Base, Gantry, and Tub Penetrations.....40
4.1.22 Machinery Houses and Outdoor Operator’s Cabs 40
4.1.22.1 Open Cabs (for Indoor Cranes).....41
4.1.23 Drive Foundations.....41
4.1.23.1 Diesel Engine-Electric Generator Set Foundations.....41
4.1.24 Counterweight.....41
4.1.25 Ballast.....41
4.1.26 Ladders, Walkways, Platforms, and Stairs.....41
4.1.27 Structural Pins.....42
4.1.28 Maintenance Support Items.....42
4.1.29 Painting and Corrosion Protection.....43
4.1.29.1 Surface Preparation.....43
4.1.29.2 Paints and Application.....44
4.1.29.3 Cathodic Protection.....44
4.2 Structural-Mechanical.....45
4.2.1 Equalizer Bars.....45

Page
4.2.2 Sheave and Equalizer Bar Frames....45
4.2.3 Boom Hinges....45
4.2.4 Fleeting Sheave Pins....45
4.2.5 Center Steadiments....45
4.2.5.1 King Pins....46
4.2.6 Roller Paths....46
4.2.6.1 Bent Rail Roller Paths....48
4.2.6.2 Cast Rail Roller Paths....48
4.2.6.3 Rollers....48
4.2.6.4 Roller Path Mounting....48
4.2.7 Rotate Bearings....49
4.2.7.1 Rotate Bearing Mounting....49
4.2.8 Travel Truck Equalizers....51
4.2.9 Gudgeon Assemblies....51
4.2.9.1 Float Pins....54
4.2.9.2 Rocker Pins....54
4.2.10 Travel Trucks....54
4.2.11 Fasteners and Connections....58
4.2.12 Wire Rope Pendants....58
4.2.13 Painting and Corrosion Protection....58
4.3 Mechanical....59
4.3.1 Hoists....59
4.3.1.1 Built-Up Hoists....59
4.3.1.2 Commercial Base/Deck Mounted Electric Hoists....60
4.3.1.3 Commercial Hydraulic Hoists....60
4.3.1.4 Commercial Underhung Hoists....61
4.3.2 Travel Drives....61
4.3.2.1 Bridge Travel Drives (on Walkways)....62
4.3.2.2 Bridge Travel Drives (Suspended)....62
4.3.2.3 Portal and Gantry Travel Drives....63
4.3.2.4 Wall and Semi-Gantry Cranes....63
4.3.3 Trolley Drives....63
4.3.4 Portal and Floating Crane Rotate Drives....64
4.3.4.1 Special Considerations....64
4.3.5 Micro-Drives....65
4.3.6 Assemblies and Components....65
4.3.6.1 Definition of Standard Commercial Assemblies and Items....65
4.3.6.2 Gear Reducers....65
4.3.6.3 Planetary Gear and Cycloidal Speed Reducers....66
4.3.6.4 Pump Drives....67
4.3.6.5 Open Gearing....67
4.3.6.6 Shafts, Axles, and Pins....67
4.3.6.7 Couplings....68
4.3.6.8 Special Couplings....69
4.3.6.9 Bearings....69
4.3.6.10 Mounted Bearings....70
4.3.6.11 Bushings....70
4.3.6.12 Keys....71
4.3.6.13 Sheaves....71
4.3.6.14 Travel Wheels....71
4.3.6.15 Wire Rope Drums....72
4.3.6.16 Wire Ropes....73
4.3.6.17 Wire Rope End Fittings....74

Page
4.3.6.18 Hook Blocks....74
4.3.6.19 Hooks....75
4.3.6.20 Shaft Seals....75
4.3.6.21 Bumpers....76
4.3.6.22 End Stops....76
4.3.6.23 Actuators....76
4.3.6.24 Radius and Capacity Indicators....76
4.3.6.25 Spud Locks....77
4.3.6.26 Rotate Holding Brakes....77
4.3.6.27 Ratchet and Pawl Mechanisms....77
4.3.6.28 Threaded Fasteners....78
4.3.6.29 Shims....78
4.3.6.30 Shear Bars....78
4.3.6.31 Dowel Pins....79
4.3.6.32 Cotter Pins....79
4.3.6.33 Retainer (Snap) Rings....79
4.3.6.34 Washers....79
4.3.6.35 Setscrews....79
4.3.6.36 Brake Wheels....81
4.3.6.37 Carrier Yokes....81
4.3.6.38 Drive Heads....81
4.3.6.39 Load Bars and Connecting Bars....81
4.3.6.40 Hydraulic Components and Assemblies....81
4.3.6.41 Painting and Corrosion Protection....82
4.4 Mechanical-Electrical 82
4.4.1 Shoe Brakes....82
4.4.1.1 Combination Hydraulic Shoe Brakes....83
4.4.1.2 Electro-Hydraulic Shoe Brakes 83
4.4.2 Disc Brakes....83
4.4.3 Caliper Disc Brakes....84
4.4.3.1 Brake Flanges....84
4.4.4 Band Brakes....84
4.4.5 Clutches....84
4.4.5.1 Toothed (Clutch) Couplings....85
4.4.6 Gear Motors....85
4.4.7 Painting and Corrosion Protection....85
4.5 Electrical 85
4.5.1 Crane Electrical Systems....85
4.5.2 DC Drive Motors....86
4.5.2.1 Series-Wound Motor Drives....86
4.5.2.2 Shunt-Wound Motor Drives....87
4.5.2.3 Compound-Wound Motor Drives....87
4.5.3 DC Drive Electrical Braking/Speed Limiting....87
4.5.3.1 Plugging....87
4.5.3.2 Emergency Dynamic Braking....88
4.5.3.3 Speed Limiting....88
4.5.4 AC Drive Motors....88
4.5.4.1 Squirrel Cage Motor Drives....88
4.5.4.2 Wound-Rotor Motor Drives....89
4.5.5 AC Drives Electrical Braking/Speed Modulating....90
4.5.5.1 Plugging....90
4.5.5.2 Emergency Dynamic Braking....90
4.5.5.3 Reduced Voltage Operating Modes....90

Page
4.5.6 Ancillary Systems....90
4.5.7 Facility Power Sources....90
4.5.7.1 Shore Power Operation....91
4.5.8 Main Diesel Engine-Generator Sets....91
4.5.8.1 Diesel Engines....91
4.5.8.2 Generators....92
4.5.8.3 Auxiliary Generators 92
4.5.8.4 Mounting and Installation....92
4.5.8.5 Instrumentation....92
4.5.8.6 Alarm and Shutdown Systems....93
4.5.9 Auxiliary Diesel Engine-Generator Sets....93
4.5.9.1 Instrumentation....93
4.5.10 Motor-Generator Sets....93
4.5.10.1 Motors....93
4.5.10.2 Generators....93
4.5.10.3 Mounting....94
4.5.11 Motors....94
4.5.11.1 Mill Motors....94
4.5.11.2 Industrial Motors....94
4.5.11.3 Nameplate Data....94
4.5.11.4 Anti-Condensation Heaters....95
4.5.12 Control Equipment....95
4.5.13 Contactors and Relays....95
4.5.14 Conductors....96
4.5.14.1 Insulation 96
4.5.14.2 Gauges....96
4.5.15 Raceways....96
4.5.16 Resistors....97
4.5.16.1 Wirewound....97
4.5.16.2 Edgewound....97
4.5.16.3 Grid Type....97
4.5.17 Electronic Voltage Conversion Units....97
4.5.18 Transformers....97
4.5.18.1 Step-Down Transformers....97
4.5.18.2 Isolation Transformers....98
4.5.19 Eddy-Current Brakes....98
4.5.20 Electrification Systems....98
4.5.20.1 Rigid Conductor Systems....98
4.5.20.2 Festooned Conductor Systems....99
4.5.20.3 Cable Reel Systems....99
4.5.20.4 Collector Ring Assemblies....99
4.5.21 Control Panel Enclosures....99
4.5.22 Limit Switches....100
4.5.22.1 Motion/Position Limits (for OET, Gantry, and Semi-Gantry Cranes)....100
4.5.22.2 Motion/Position Limits (for Portal and Floating Cranes)..100
4.5.22.3 Other Portal and Floating Crane Applications....101
4.5.22.4 Condition Limits....101
4.5.23 Protective Devices....101
4.5.23.1 Feeder Protection....102
4.5.23.2 Motor Branch Circuit Protection....102
4.5.23.3 Motor Protection....103
4.5.23.4 Control Circuit Protection....103

Page
4.5.23.5 Transformer Protection....103
4.5.23.6 Ancillary Circuit Protection....103
4.5.24 Illumination....103
4.5.24.1 Crane Passageways and Spaces....103
4.5.24.2 Hook Load....104
4.5.24.3 Work Area....104
4.5.24.4 Aircraft Warning....104
4.5.25 Operator's Controls....104
4.5.25.1 Pendent Pushbutton Station....104
4.5.25.2 Master Switches....105
4.5.25.3 Radio Controls....105
4.5.25.4 Infrared Controls....105
4.5.26 Radio Frequency Links....106
4.5.26.1 RF Link Gauges....106
4.5.27 Grounding and Bonding....106
4.5.27.1 AC System Grounding....106
4.5.27.2 DC System Grounding....108
4.5.27.3 Bonding....108
4.5.27.4 Drum Grounding....108
4.5.27.5 Grounding Through the Electrification System....108
4.5.27.6 Lightning Protection....108
4.5.28 Reduced Voltage Starters....108
4.5.29 Attached Safety Systems and Devices....108
4.5.29.1 Load Indicating Devices....109
4.5.29.2 Load-Moment Indicating Systems....110
4.5.29.3 Anti-Two-Block Devices....110
4.5.29.4 Additional Requirements....110
4.5.29.5 Wind Speed Indicating Systems 110
4.5.30 Painting and Corrosion Protection....110

Section 5 DESIGN CRITERIA
5.1 Structural....111
5.1.1 Structural Design Loads....111
5.1.1.1 Dead Load....111
5.1.1.2 Rated Load....111
5.1.1.3 Impact....111
5.1.1.4 Wind Load....112
5.1.1.5 Acceleration and Deceleration Forces....113
5.1.1.6 Spreading and Squeezing Forces....113
5.1.1.7 Additional Loads on Floating Cranes....114
5.1.1.8 Seismic Forces....114
5.1.2 Design of Structural Components....114
5.1.2.1 OET Cranes....115
5.1.2.2 Underrunning Cranes....115
5.1.2.3 Cantilever Cranes....115
5.1.2.4 Portal Cranes....115
5.1.2.5 Floating Cranes....118
5.1.2.6 Container Cranes....119
5.1.2.7 Mobile Cranes....121
5.1.2.8 Gantry and Semi-Gantry Cranes....122
5.1.3 Stability....122
5.1.3.1 Portal Cranes....122
5.1.3.2 Floating Cranes....123

Page
5.1.3.3 Container Cranes....124
5.1.3.4 Mobile Cranes....125
5.1.3.5 Gantry and Semi-Gantry Cranes....125
5.1.4 Supplementary Design Features....126
5.1.4.1 Accessibility Provisions....126
5.1.4.2 Test Weights....126
5.1.4.3 Structural Assembly Standards....127
5.1.4.4 Accessibility and Maintainability Features....127
5.2 Structural-Mechanical 129
5.2.1 Equalizer Bars and Bar Frames....129
5.2.2 Boom Hinges....129
5.2.3 Fleeting Sheave Pins....130
5.2.4 Center Steadiments....130
5.2.5 King Pins....130
5.2.5.1 Trunnion Mounting....131
5.2.5.2 Locking Nuts....131
5.2.6 Roller Paths....131
5.2.6.1 Maximum Roller Load....132
5.2.6.2 Bull Gears....132
5.2.7 Rotate Bearings....133
5.2.7.1 Ring Gears....133
5.2.7.2 Mounting Fasteners....133
5.2.7.3 Fastener Sizing....134
5.2.8 Maximum Wheel Load (Portal Cranes)....134
5.2.8.1 Beaming Method....135
5.2.8.2 Formal Presentation of the Beaming Method....135
5.2.8.3 Moment of Inertia Method....137
5.2.9 Travel Truck Systems....137
5.2.10 Gudgeon Thrust Washers and Thrust Bearings....139
5.2.10.1 Thrust Washers....139
5.2.10.2 Thrust Bearings....139
5.2.11 Gudgeon and Gudgeon Pin Bushings....140
5.2.12 Travel Truck Float....140
5.2.13 Float Pin/Bushing Assemblies....142
5.2.13.1 Float Pins....142
5.2.13.2 Float Bushings....142
5.2.14 Wire Rope Pendants....142
5.2.14.1 Pendant End Fittings....144
5.2.15 Fasteners and Connections....144
5.3 Mechanical 144
5.3.1 Gear Reducers....145
5.3.2 Open Gearing....146
5.3.3 Shafts and Axles....146
5.3.3.1 Selection of Design Factors....146
5.3.3.2 Travel Drive Shafts....147
5.3.4 Pins....147
5.3.5 Couplings....147
5.3.6 Bearings....147
5.3.6.1 Selection of Design Loads and L-10 Lives....147
5.3.6.2 Hook Thrust Bearings....148
5.3.6.3 Bearing Installation....148
5.3.7 Mounted Bearings....149
5.3.8 Bushings....149

Page
5.3.9 Keys, Key Seats, and Keyways....149
5.3.10 Sheaves....149
5.3.11 Travel Wheels....150
5.3.11.1 Other Wheel/Rail Combinations....151
5.3.12 Wire Rope Drums....151
5.3.12.1 Anchor Points....151
5.3.13 Wire Ropes....152
5.3.13.1 Size Selection....152
5.3.13.2 Wire Rope End Fittings....153
5.3.13.3 Non-Permanent Wire Rope Retention Hardware....154
5.3.14 Reeving Systems....154
5.3.14.1 Overhauling Weight....155
5.3.14.2 Fleet Angles....155
5.3.15 Hook Blocks....156
5.3.16 Hooks....156
5.3.17 Bumpers....157
5.3.18 Spud Locks....157
5.3.19 Rotate Holding Brakes....157
5.3.20 Ratchet and Pawl Mechanisms....157
5.3.21 Threaded Fasteners....158
5.3.22 Surface Finishes....158
5.3.23 Fits....158
5.3.24 Welding....159
5.3.25 Hydraulic Systems....159
5.4 Mechanical-Electrical....159
5.4.1 Sizing and Selection of Components....159
5.4.1.1 Mechanical Criteria for Brakes....159
5.4.1.2 Electrical Criteria for Brakes....161
5.4.1.3 Mechanical Criteria for Clutches....161
5.4.1.4 Electrical Criteria for Clutches....162
5.4.1.5 Gear motors....162
5.5 Electrical 162
5.5.1 Motor Operating Regimes....163
5.5.2 Motor Characteristic Curves....165
5.5.3 Motor Branch Circuits....165
5.5.3.1 DC Motor Branch Circuits....165
5.5.3.2 AC Motor Branch Circuits....177
5.5.4 Speed-Torque Curves....177
5.5.5 Sizing and Selection of Components....177
5.5.5.1 Diesel Engine-Generator Sets....177
5.5.5.2 Motor-Generator Sets....190
5.5.5.3 Motors....190
5.5.5.4 Control Equipment....191
5.5.5.5 AC Control Equipment....192
5.5.5.6 DC Control Equipment....193
5.5.5.7 Contactors....193
5.5.5.8 Thyristors....194
5.5.5.9 Rectifiers....195
5.5.5.10 Resistors....195
5.5.5.11 Eddy-Current Brakes....196
5.5.5.12 Limit Switches....196
5.5.5.13 Pendent Pushbutton Stations....197
5.5.5.14 Cab Control Stations....198

Page
5.5.5.15 Transformers....198
5.5.5.16 Protective Devices....199
5.5.5.17 Conductors....200
5.5.5.18 Raceways....201
5.5.5.19 Electrifications....201
5.5.5.20 Grounding/Bonding/Lightning Protection....201
5.5.5.21 Transients and Harmonics Protection....202
5.5.5.22 Standing Wave Protection....202
5.5.5.23 Lighting Fixtures....202
5.5.5.24 Radio Frequency Links....203
5.5.5.25 Radio Controls....203
5.5.5.26 Shore Power....203

Section 6 SUPPLEMENTARY REQUIREMENTS AND DESIGN CONSIDERATIONS
6.1 Supplementary Requirements....204
6.2 Special Purpose Service....204
6.2.1 Captivation and Containment....206
6.3 Hazardous/Explosive Environment....207
6.3.1 Minimum Anti-Spark Protection....207
6.3.2 Additional Anti-Spark Protection....207
6.3.3 Maximum Anti-Spark Protection....207
6.3.4 Background....208
6.4 Hot (Molten) Metal Service....208
6.5 Ordnance/Explosives Handling....210
6.6 Longshoring Service....211

Section 7 TECHNICAL DOCUMENTATION
7.1 Purpose....212
7.1.1 Design Responsibility....212
7.1.2 Scope 212
7.2 Floating Cranes....213
7.3 Commercial Cranes....213
7.3.1 Mobile Cranes....213
7.3.2 Pedestal Cranes....213
7.4 Computer Analyses....213
7.5 Catalog Cuts....214
7.6 Certifications....214
7.7 Technical Manuals....215
7.8 Crane Alterations....216

Section 8 FOREIGN DESIGN STANDARDS AND PRODUCTS
8.1 Foreign Design Standards....217
8.1.1 Federation Europeene De La Manutention....217
8.2 Translation and Engineering Units....217
8.3 Professional Credentials....217
8.4 Materials....217
8.4.1 Commercial Grade Dedication....217
8.5 Welding....218
8.6 Wire Ropes....218
8.7 Specialty Components....218
8.7.1 Common Components....218
8.8 Exceptions....218

Page

8.8.1 High-Strength Structural Bolts and Nuts.....218
8.8.2 Electrical Controls.....219

Section 9 CRANE INFORMATION FORMS
9.1 Main Crane Types.....220
9.1.1 Other Crane Types.....220

APPENDICES

APPENDIX A Sample Crane Information Form for Overhead Electric.....221
Traveling Crane(s)

APPENDIX B Sample Crane Information Form for Underrunning.....230
(Single Girder) Crane(s)

APPENDIX C Sample Crane Information Form for Portal Crane(s).....238

FIGURES

Figure 1 Overhead Electric Traveling Crane.....4
2 Underrunning Crane.....7
3 Stationary Jib Cranes.....9
4 Traveling Wall Cranes.....11
5 Portal Crane (Older Design).....13
6 Portal Crane (Newer Design).....14
7 Floating Crane (Older Design).....16
8 Floating Crane (Newer Design).....17
9A Container Crane.....20
9B Container Crane.....21
10 Mobile Cranes (Wheel-Mounted).....23
11 Mobile Cranes (Track Mounted).....24
12 Gantry Crane.....26
13 Semi-Gantry Crane.....27
14 Underrunning End Trucks.....34
15 Center Steadiment.....47
16 Three-Row Rotate Bearing.....50
17 Gudgeon Assembly (Inverted T Type).....52
18 Gudgeon Assembly (Saddle Type).....53
19 Float Pin.....55
20 Float Pin.....56
21 Float Pin.....57
22 Carrier Yokes and Travel Assembly.....80
23 RF Link.....107
24 Variation of Wheel Load Through a Quadrant of Rotation...136
25 Beaming Method Model.....138
26 Relative Variation of Corner Load During Full Rotation...138
27 Portal Crane Truck Float.....141
28 Cross Section of Assembly (At Maximum Float).....143
29 Motor Operating Regimes.....164
30 Characteristic Curves, DC Series-Wound Motor, 30HP.....166
31 Characteristic Curves, DC Shunt-Wound Motor, 30HP.....167
32 Characteristic Curves, DC Compound-Wound Motor, 30HP.....168

Page

33 Characteristic Curves, AC Squirrel Cage Motor, 5HP.....169
34A DC Series-Wound Motor Branch Circuit (Hoist Drive).....170
34B DC Series-Wound Motor Branch Circuit (Hoist Drive).....171
35 DC Series-Wound Motor Branch Circuit (Curved Track Travel Drive).....172
36 DC Series-Wound Motor Branch Circuit (Straight Track.....173 Travel Drive) (Off Position)
37 DC Shunt-Wound Motor Branch Circuits (Adjustable.....174 Voltage Controls; Hoist or Travel Drives)
38 DC Compound-Wound Motor Branch Circuit (Curved Track.....175 Travel Drive) (Off Position)
39 AC Squirrel Cage Motor Branch Circuits.....176
40A AC Wound-Rotor Motor Branch Circuits (Hoist Drive).....178
40B AC Wound-Rotor Motor Branch Circuits (Hoist Drive).....179
41 AC Wound-Rotor Motor Branch Circuit (Travel Drive).....180
42 DC Series-Wound Motor Speed-Torque Curves (Hoist Drive)..181
43 DC Series-Wound Motor Speed-Torque Curves (Travel Drive).182
44 DC Shunt-Wound Motor Speed-Torque Curves (Hoist and.....183 Travel Drives)
45 DC Compound-Wound Motor Speed-Torque Curves (Travel Drives).....184
46 AC Squirrel Cage Motor Speed-Torque Curves (Hoist and....185 Travel Drives)
47 AC Wound-Rotor Motor Speed-Torque Curves (Hoist Drive;...186 Regenerative Braking)
48 Hook Speed – Hook Load Curves (AC Wound-Rotor Motor .....187 Driven Hoist, with Mechanical Load Brake)
49 Hook Speed – Hook Load Curves (AC Wound-Rotor Motor.....188 Driven Hoist, with Eddy-Current Brake)

TABLES

Table 1 Percentages of Increase for Impact.....112
Table 2 Bearing Life Determination Criteria.....148

REFERENCES 244

Section 1: INTRODUCTION

1.1 Scope. This handbook provides comprehensive descriptions of the predominant crane types in service at Navy shore facilities. It also outlines the design requirements and the pertinent engineering methodology for design evaluation of older and contemporary cranes.

It should be understood that numerous exceptions to the crane configurations, design features, and design criteria can be found in the Navy crane inventory – all with a record of successful performance – but they are beyond the scope of this handbook. Unless such exceptions are clear non-compliances with the requirements of this handbook or their performance becomes questionable, they should be left intact.

1.1.1 Definitions. The terms “older cranes”, “newer cranes”, “standard commercial”, and “custom design(ed)”, and “built-up” are used throughout this handbook. Their definitions follow.

a) Older cranes, in the case of portal and floating cranes, are those designed and built prior to the early 1980’s; newer cranes are those of the later period. Their prominent visual distinctions are illustrated in figures 5, 6, 7, and 8. Container and mobile cranes are all in the newer crane category. The distinction among the other crane types is less identifiable, but the most visible features on older cranes are riveted structural connections, extensive use of open gearing, wide use of castings, and imprecise material identification.

b) Standard commercial or commercial assemblies and components are those items readily available off-the-shelf from manufacturers specializing in the design and production of such items. This definition encompasses mobile cranes, packaged hoists, underrunning hoist/trolley units, gear reducers, brakes, spreaders, hooks, wheels, etc. To be used on cranes, these items must comply with the applicable recognized industry standards.

c) Custom designed or built-up are terms applied to items of original or unique design, including entire cranes, assemblies, and components.

1.1.2 Applicability to Older Cranes. Older cranes, which do not comply with the design criteria presented in this handbook, may remain in service in their original configuration if they have a history of satisfactory performance. When assemblies or components of older cranes need to be repaired or replaced, they should be upgraded to the criteria of this handbook only where it is practical to do so. Navy Crane Center (NCC) controls this upgrading process through the review and approval/disapproval of Crane Alteration Requests, as mandated in NAVFAC P-307.

1.1.3 Applicability to Standard Commercial Items. The applicability of Sections 4, 5, 6, and 8 to purchased off-the-shelf items is limited to the optional features offered by the manufacturers of these items and easily implemented modifications. Such modifications are confined essentially to replacement of wire rope, hook block, or hook of packaged hoist or hoist/trolley unit.

1.2 Cancellation. This handbook cancels and supersedes NAVFAC DM-38.01, Weight Handling Equipment, and Change 1 dated October 1986.

1.3 Related Criteria. This handbook covers many varieties of cranes, and consequently references many design standards and criteria specifications. In order to make the relationship of such standards and specifications to the crane types clear and unambiguous, they are listed under Industry Standards paragraphs of the particular crane type description to which they apply.

1.4 Purpose of Related Criteria. The applicable industry standards, listed under each crane type, are intended to govern the design of the crane and the components to which they apply. Any other, more stringent, design requirements apply only when specifically invoked by NCC or other procuring activity.

Section 2: MAIN CRANE TYPES

2.1 Overhead Electric Traveling (OET) Cranes. These cranes, also called "bridge cranes", are installed on overhead runway rails to provide hoisting (lifting) coverage throughout the entire length and width (span) of the runway. The trolley is equipped with one or two hoists. OET cranes are ideal for heavy duty service in warehouses, machine shops, maintenance bays, and similar work areas. They function equally well indoors and outdoors. The controls for the cranes may be located in an operator's cab, on a suspended pendent pushbutton station near the floor level, or at a remote control station. The design and condition of the runway must comply with the crane industry standards to ensure satisfactory crane operation.

2.1.1 General Description. The main structure of OETs is a pair of parallel bridge girders, which span the runway and rest on end trucks. In the common four-wheel configuration, the end trucks also function as end ties for the bridge girders. The hoists are mounted on a trolley frame, which travels on rails fastened to the bridge girders. Crane motions are driven by electric motors. The electric power is transferred from a fixed location near the runway to the traveling bridge by means of collector shoes sliding along rigid conductors parallel to the runway or through extendable loops of flexible conductors festooned along the runway. Figure 1 shows a typical OET with two hoists.

The majority of OET's have two hoists (main and auxiliary) on the trolley for maximum operational utility. The main hoist is capable of lifting the rated capacity of the crane and is relatively slow; the auxiliary hoist has a lower lifting capacity (from 10 percent to 30 percent of the main hoist) but is correspondingly faster. In normal service it is the auxiliary hoist that is used for most lifts since the need for the rated capacity of the main hoist is infrequent.

The bridge girders are always custom designed to fit the runway span. The end trucks/end ties, trolley frame, bridge and trolley drives, and hoists may be manufacturer's standard commercial or custom designed (built-up) assemblies, depending on the application. In either case, many of the subassemblies and components are standard off-the-shelf components. Usually cranes intended for general purpose service (GPS) are in large measure manufacturers' standard designs, those for special purpose service (SPS) or handling of ordnance are often built-up custom designs.

2.1.2 Distinctive Features. The stable platform of the bridge structure of OET cranes permits a wide range of design options to suit virtually any operational requirement. The rated capacities of these cranes vary from 5 tons to 500 tons, and their spans may range up to 200 feet. With the hoists centered between the bridge girders, crane lifting capacity is never limited by stability. The high overhead location of these cranes avoids interference with the floor activity and equipment by lifting the loads over the floor obstructions. Walkways along the bridge girders and the floor on the trolley structure, provide excellent accessibility to all mechanical and electrical components.

2.1.3 Industry Standards. The governing industry standard for OET cranes is CMAA Specification #70, Specifications for Top Running Bridge & Gantry Type Multiple Girder Electric Overhead Traveling Cranes, published by the Crane Manufacturers Association of America, Inc. This specification defines crane

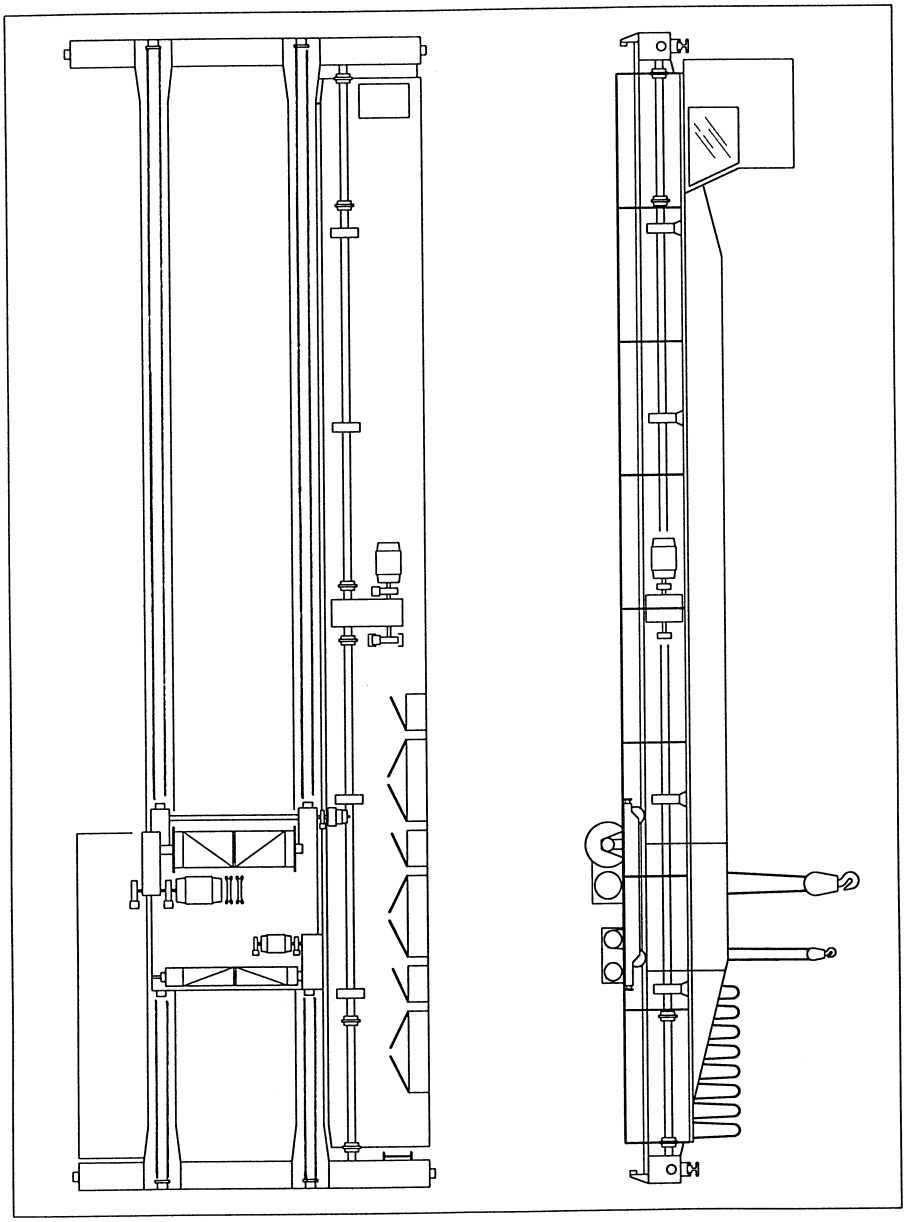

FIGURE 1
OVERHEAD ELECTRIC TRAVELING CRANE

service classes – from “standby” to “continuous severe” service. (NCC policy is to specify Class C “moderate” service as a minimum.) In addition to the crane design requirements, this specification provides the runway design and condition criteria for straightness, levelness, span, and deflection tolerances.

CMAA Specification #70 is not entirely adequate for meeting Navy OET design requirements, especially for the mechanical and electrical design features. These additional Navy requirements are addressed in detail in Sections 4 and 5 of this handbook.

ANSI/ASME B30.2, Overhead and Gantry Cranes (Top Running Bridge, Single or Multiple Girder, Top Running Trolley Hoist) published by the American Society of Mechanical Engineers. This standard focuses primarily on the safety aspects of the design and operation of OET and gantry cranes.

The Whiting Crane Handbook, published by the Whiting Corporation, is a comprehensive crane design reference textbook. It is especially useful for estimating weights, dimensions, required runway and building clearances, and maximum wheel loads of OET cranes.

2.2 Underrunning Cranes. These cranes, also called “underhung cranes”, always feature an underrunning hoist/trolley unit or a trolley with a separate hoist; however, the bridge end trucks may be overrunning (on runway rails) or underrunning (on the lower flanges of runway beams). The underrunning runway beams are secured to the roof support structure of the building. The crane configurations are either in the form of a single girder (with a combination hoist/trolley unit mounted on its lower flange) or twin girders (with a trolley mounted on their lower flanges). The end trucks may be of the rigid type, with wheels on fixed axles protruding from the end truck frame; or of flexible type, on swivel connections supported by two-wheel carrier yokes. Crane operator’s controls are usually on a suspended control station near the floor level. The design and condition of the runway, whether for overrunning or underrunning trucks, must comply with industry standards to ensure satisfactory crane operation.

2.2.1 Suspension Systems. Underrunning cranes with underrunning bridge end trucks are often procured with runway beams and suspension systems. The suspension systems may be rigid or flexible, depending on the building construction and the available headroom, and are designed to support the bridge end trucks on the lower flanges of the runway beams. In the rigid systems the runway beams are fastened directly to the building structure. In the flexible systems the runway beams are suspended on tie rods which can move laterally (like a pendulum) about their individual suspension points. Lateral and longitudinal bracing must be installed to limit the horizontal motion (sway) of such systems. Standard commercial tie rods, clamps, and various fittings and hardware are available from manufacturers of patented track.

(Runways for cranes with overrunning bridge end trucks are usually constructed as an integral part of the building.)

2.2.2 General Description. There is a wide selection of arrangements and design features available for underrunning cranes. The runway beams and the bridge girders may be in the form of standard structural shapes (wide flange or I-beam sections) or patented (monorail type) track. (NCC policy is to specify

only patented track for all new crane procurements.) The cranes are most often electrically powered, and with standard commercial wire rope hoists or hoist/trolley units. However, several other power and design options are available – pneumatic or manual power and chain hoist. (See paragraph 4.3.1.4 for standard commercial design variations.) The electric power is transferred from a fixed location near the runway to the traveling bridge through expandable loops of flexible conductors festooned along the runway or rigid conductors and sliding collector shoes.

The single-girder bridge with a hoist/trolley unit is the most prevalent configuration. It is comprised of the main girder, which carries the hoist/trolley unit, and an outrigger beam braced to the upper flange of the main girder. The outrigger beam improves the lateral stability of the main girder, supports the hoist/trolley electrification system, and may support the bridge travel drive. The main girder and the outrigger beam are connected to an end truck at each end. Bridge travel drives on flexible end trucks are in the form of two powered yokes (drive heads), one on each end truck. On cranes with rigid end trucks, as depicted in figure 2, the bridge drive is centrally mounted and drives both end trucks. The hoist/trolley unit has an integral travel drive.

The twin-girder bridge configuration has the upper flanges of the girders braced to each other for lateral stability and carries a trolley frame with an independent hoist on the lower flanges. The end trucks may be of either the rigid or flexible design, with bridge drives as described above. The trolley frame is usually a custom designed, built-up assembly.

2.2.3 Distinctive Features. The unique feature available with these cranes is the ability of the hoist/trolley unit or the trolley to cross over between bridge girders of adjoining cranes or travel onto a spur track. Such cross-overs may be direct (girder-to-girder) or across an intermediate transfer section. The hoist/trolley units are standard commercial designs, which are selected from among the catalog models advertised by the major manufacturers of such equipment; it is impractical to have them custom designed. The trolleys of twin-girder bridge cranes, can mount either a standard model or a built-up, custom designed hoist.

2.2.4 Industry Standards. Due to the wide variety of configurations and design options available with this category of cranes, there are several applicable industry standards. The governing standard for the design of single girder cranes with underrunning hoist/trolley units is CMAA Specification #74, Specifications for Top Running & Under Running Single Girder Electric Overhead Traveling Cranes Utilizing Under Running Trolley Hoist, published by the Crane Manufacturers Association of America, Inc. It prescribes design requirements for bridge girders in the form of all types of single web structural beams, including specially reinforced, and of box section designs. The bridge end trucks are either of the top running type as in OET’s (and running on runway rails) or underrunning type with wheels on fixed axles. This specification also provides design and condition requirements for straightness, levelness, span, and deflection tolerances for runways for top running and underrunning cranes.

Being limited in scope, however, and specifically excluding the patented track and swivel carrier yoke end trucks, the NCC references CMAA Specification #74 only for the evaluation of existing structural shape/section bridge girders and runway beams.

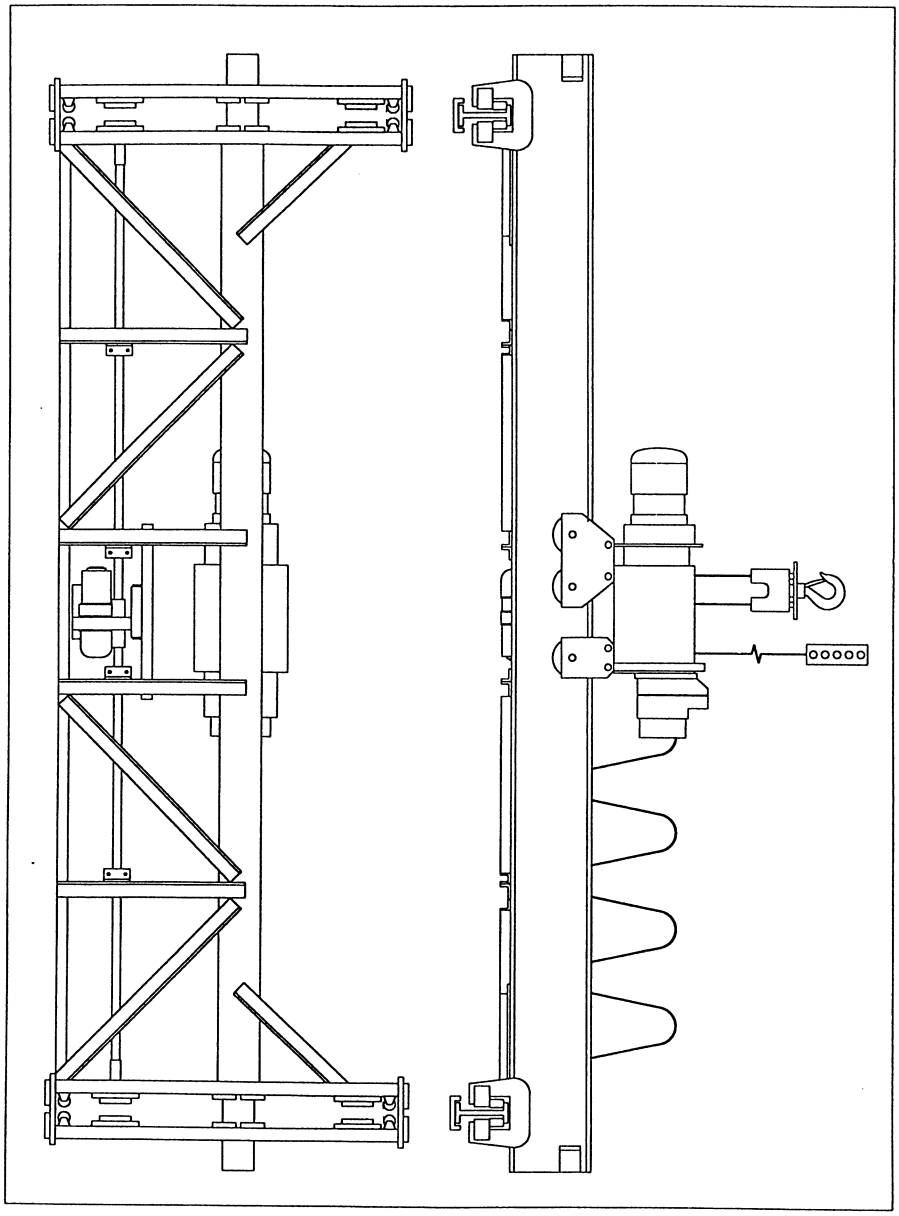

FIGURE 2
UNDERRUNNING CRANE

The governing industry standard for the design of runways (including suspension systems) and crane bridges utilizing patented track, is ANSI MH 27.1, Specification for Underhung Cranes and Monorail Systems, published by Monorail Manufacturers Association, Inc. This specification defines crane service classes from “standby” to “severe duty cycle” service. (NCC policy is to specify Class C “moderate” service as a minimum.)

Electric hoists and hoist/trolley units for all modes of installation/suspension on underrunning cranes are governed by ANSI/ASME HST-4M, Performance Standard for Overhead Electric Wire Rope Hoists, published by the American Society of Mechanical Engineers.

ANSI/ASME B30.11, Monorails and Underhung Cranes, published by the American Society of Mechanical Engineers. This standard focuses primarily on the safety aspects of the design and operation of underrunning cranes.

ANSI/ASME B30.16, Overhead Hoists (Underhung), published by the American Society of Mechanical Engineers. This standard focuses primarily on the safety aspects of the design and operation of electric-powered wire rope and chain hoists, hand chain operated (manual) chain hoists, and air-powered wire rope and chain hoists.

ANSI/ASME B30.17, Overhead and Gantry Cranes (Top Running Bridge, Single Girder, Underhung Hoist, published by the American Society of Mechanical Engineers. This standard focuses primarily on the safety aspects of the design and operation of underrunning cranes utilizing all types of box section and single web structural girders (including specially reinforced).

2.3 Cantilever Cranes. This category of cranes encompasses a large assortment of designs, and it is not practical to describe all their variations. They are grouped as stationary (jib) and traveling (wall), and only the most prevalent designs within these groups are described in this handbook.

2.3.1 General Description. These cranes utilize various designs of cantilevered booms with cross sections similar to the bridge girders of OET or underrunning cranes. The cranes may either be stationary jib type (with a pivoting boom mounted on a pillar or wall bracket) or traveling type (with the boom mounted rigidly on a vertical frame) running on rails built into the wall structures. Because of the moment imposed on the boom, the rated capacity of these cranes is usually limited to 5 tons.

2.3.1.1 Stationary. Jib cranes have a restricted area of hook coverage but are easy to install in any location that requires light hoisting service. Pillar type jib cranes are free-standing, with a pivoting boom that is either fully cantilevered or tie rod supported. The anchoring of the base of the pillar must be designed for the entire moment imposed on the pillar. Jib cranes that are mounted on wall brackets have the boom foot rigidly connected to a vertical mast and the boom tip supported by a diagonal tie rod secured to the top of the mast. The ends of the mast pivot on two in-line bearings built into the surrounding building structure. Alternatively, the mast may be omitted and the boom foot and upper end of the tie rod attached directly to in-line bearings supported by the wall column. Figure 3 shows four varieties of stationary jib cranes.

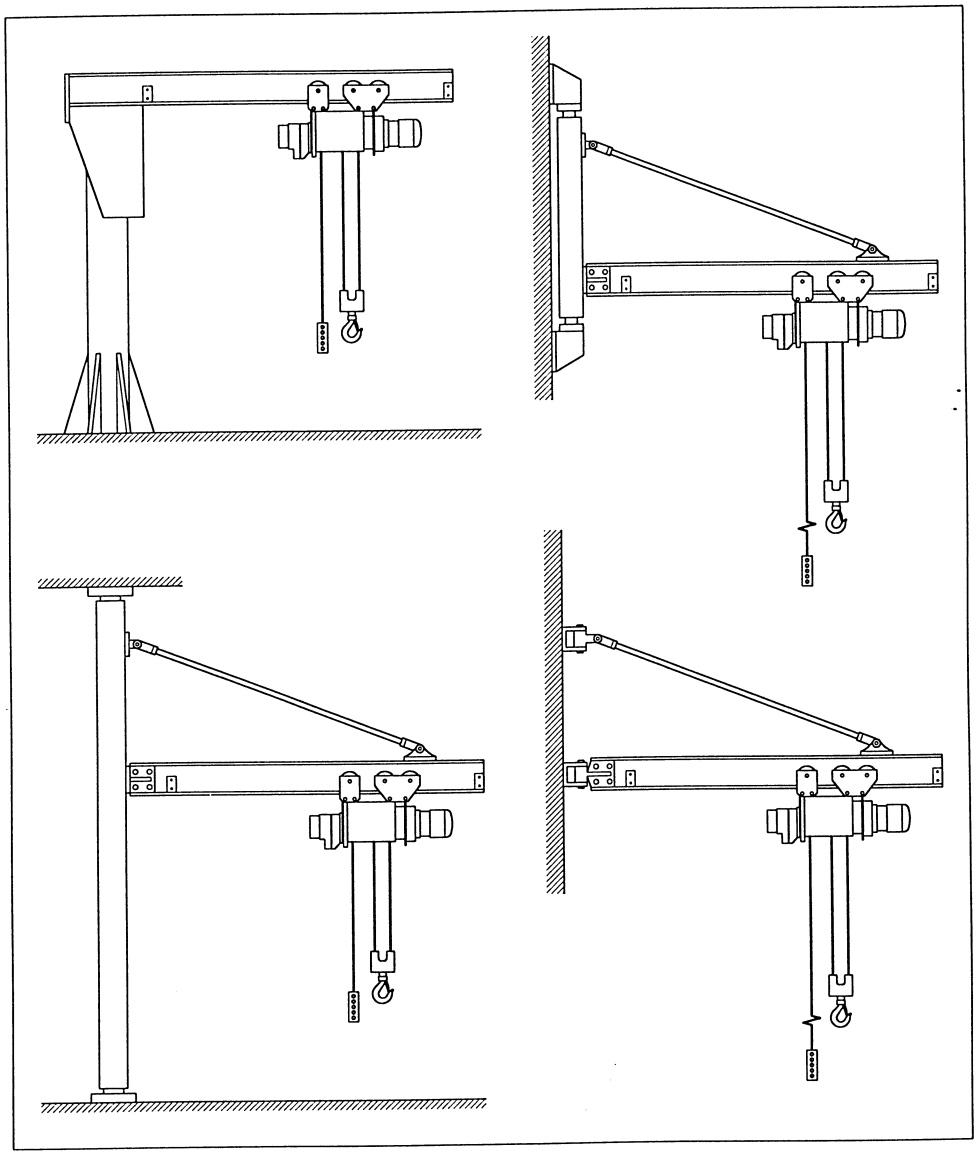

FIGURE 3
STATIONARY JIB CRANES

The booms on these cranes are always in the form of a single-web girder with an underrunning hoist/trolley unit. The individual motions may be electrically driven and controlled from a pendent pushbutton station or manually operated.

2.3.1.2 Traveling. These cranes travel along the wall on a runway comprised of a single rail designed for the vertical loads and two widely separated moment-carrying rails or other form of running surfaces along the wall. The design of the single rail end truck (carriage) is similar to that of an OET crane. The moment-carrying members of the runway can use either of two design options – two standard rails (oriented for opposed horizontal loads); or two single web structural sections. In the case of the rail option, the moment-carrying end trucks are similar to those of an OET crane. In the case of single web sections, the upper end trucks are designed to pull on the flanges in the same manner as the underrunning rigid end trucks with wheels on fixed axles in pinned brackets for load equalization; the lower end truck is designed with crowned rollers to run on the outer surface of the runway flange. The running surfaces of the structural sections can be upgraded by the addition of welded-on machined medium-carbon steel strips.

The booms may be single beam type (either structural section or patented track) mounting an underrunning hoist/trolley unit or a twin beam design with a top running trolley. The booms are supported with tie rods or knee braces, as best suited for the particular application. Figure 4 shows two types of traveling wall cranes.

Wall cranes are usually electrically powered on all motions and may be controlled from an operator’s cab or a pendent pushbutton station. Electric power is transferred from a fixed location near the runway to the traveling vertical frame by means of collector shoes sliding along rigid conductors parallel to the wall. Light duty cranes may have manually operated hoist and trolley drives of the types available for underrunning cranes.

2.3.2 Distinctive Features. The moments that these cranes impose on the support structure or the runway limit their capacity and reach. However, with the availability of virtually all key components off-the-shelf and with many design options, cantilever cranes can be selected or customized to suit virtually any low capacity application.

2.3.3 Industry Standards. There are no industry standards for this specific category of cranes. Various portions of the design are included in the standards of OET (CMAA Specification #70) and underrunning cranes (CMAA Specification #74). The safety aspects of the design and operation are addressed in ANSI/ASME B30.2, Overhead and Gantry Cranes (Top Running Bridge, Single or Multiple Girder, Top Running Trolley Hoist) and ANSI/ASME B30.11, Monorails and Underhung Cranes; published by the American Society of Mechanical Engineers.

2.4 Portal Cranes. Portal cranes derive their name from the opening (portal) between the legs of the structure (gantry) which permits the passage of vehicles in the congested environment of wharves and piers. They are also popularly called revolving gantry, dockside, or Whirley cranes. These cranes run on two widely spaced rails (18 to 60 foot gauge) at ground level close to the edge of the wharves and piers that they service. The gantry mounts a rotating superstructure (upperworks) with a luffing boom. The standard clearance under the gantry cap is 22 feet.

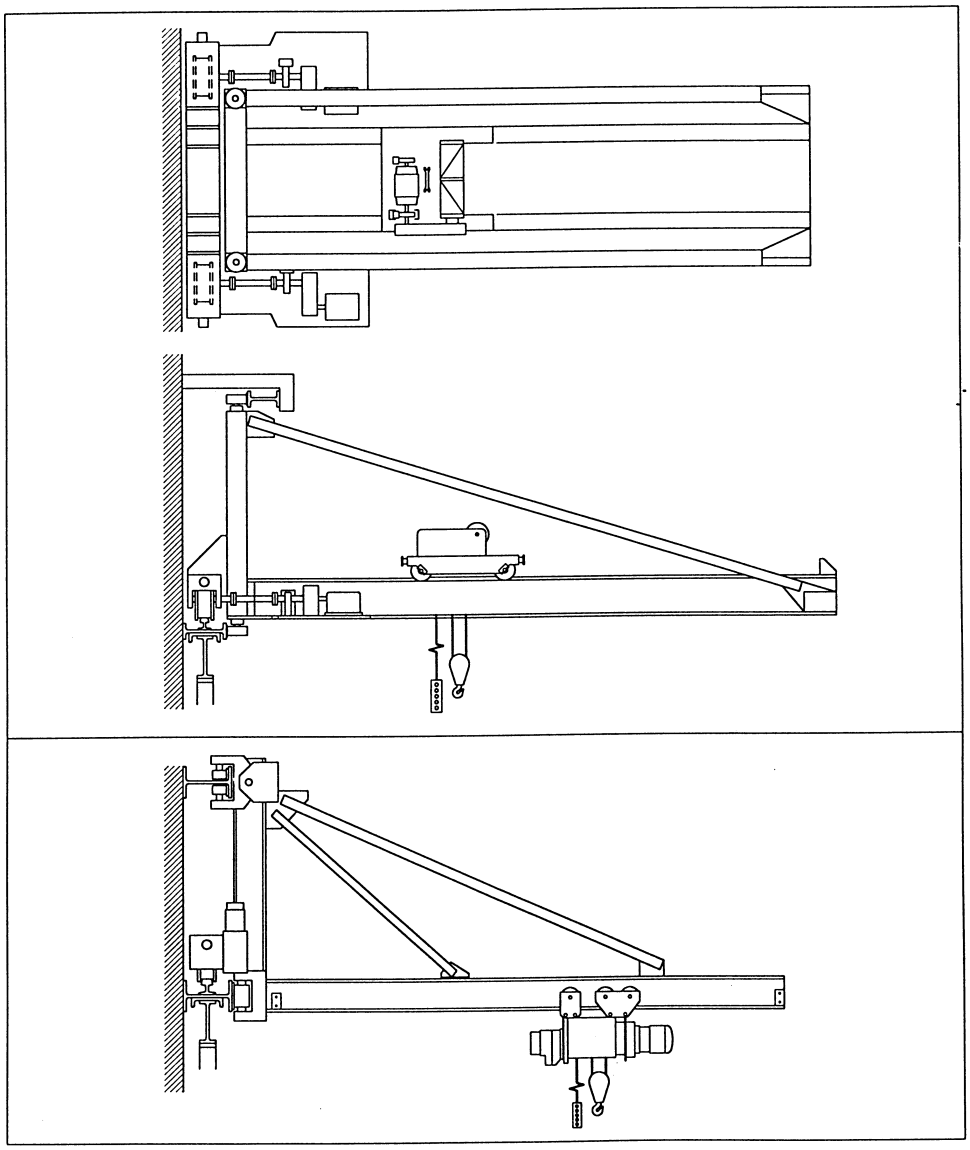

FIGURE 4
TRAVELING WALL CRANES

There is a striking visual difference between the older portal cranes (shown in figure 5) and those of newer design and manufacture (shown in figure 6). The older cranes have a deep triangular truss boom and a cage-like gantry consisting of hundreds of riveted structural members. The newer cranes have a slender lattice boom and smooth, streamlined, gantry structure consisting of a few large weldments bolted together. The rated capacities and hook reaches range up to 170 tons and 120 feet, respectively. The elevation of the machinery deck, boom hinge, and operator's cab are of major importance to the utility of the crane – the boom hinge position controls the crane's reach over nearby obstructions and the position of the operator's cab determines his field of vision. The elevations of these elements vary from 48 feet to 81 feet.

There are significant differences between Navy and commercial portal cranes.

a) Navy cranes are normally "straight-line" rated up to the maximum reach of the hook; for example, 50-tons from 55-foot radius to 95-foot radius. Commercial cranes are variably rated; for example, 75 tons at 55-foot radius and decreasing to 12 tons at 95-foot radius.

b) Navy cranes are required to travel around tight curves at the head of drydocks, which necessitates complex travel truck designs to compensate for increase in the effective rail gauge. Commercial cranes travel on straight or gently curving tracks with a fixed rail gauge. The geometry of this effect is explained in paragraph 5.2.12.

c) Navy cranes are always self-powered with an onboard diesel engine-generator set. Commercial cranes are often shore-powered by means of a gantry mounted cable reel connected to a fixed electric terminal near one rail. The cable reel pays out or takes up the cable as the crane travels back and forth along the track.

2.4.1 General Description. The main structural components of portal cranes are the rotating upperworks (including the machinery deck, A-frame, boom, and strut) and the traveling portal base. Each of the four corners of the gantry is supported by a complement of travel wheels. A system of equalizers (rocking beams) under each corner distributes the corner load equally to all wheels. Pairs of wheels are mounted in the travel trucks, which are free to swivel (steer) to follow the curvature of the track. Typically, 1/3 or 1/2 of the wheels are driven.

The upperworks is comprised of the machinery deck on which are mounted two or three hook hoists, luffing hoists, rotate drive, electrical controls and resistors, diesel engine-generator set, fuel tank, A-frame, boom, counterweight, and operator's cab. (In the case of cranes with machinery decks at 80-foot elevation, the diesel engine-generator set and fuel tank are installed on the portal base cap to make them more accessible for servicing.) The entire upperworks is supported by roller path and king pin assemblies or a rotate bearing. With only rare exceptions, all drives on Navy portal cranes are electric. Commercial portal cranes, however, are increasingly converting to hydraulic (hydrostatic) drives, which have been refined to offer some tangible advantages over the electric drives – compactness, continuously variable speed range, and lower costs. This view is confirmed by the fact that mobile cranes are exclusively hydrostatic or mechanical/hydrokinetic.

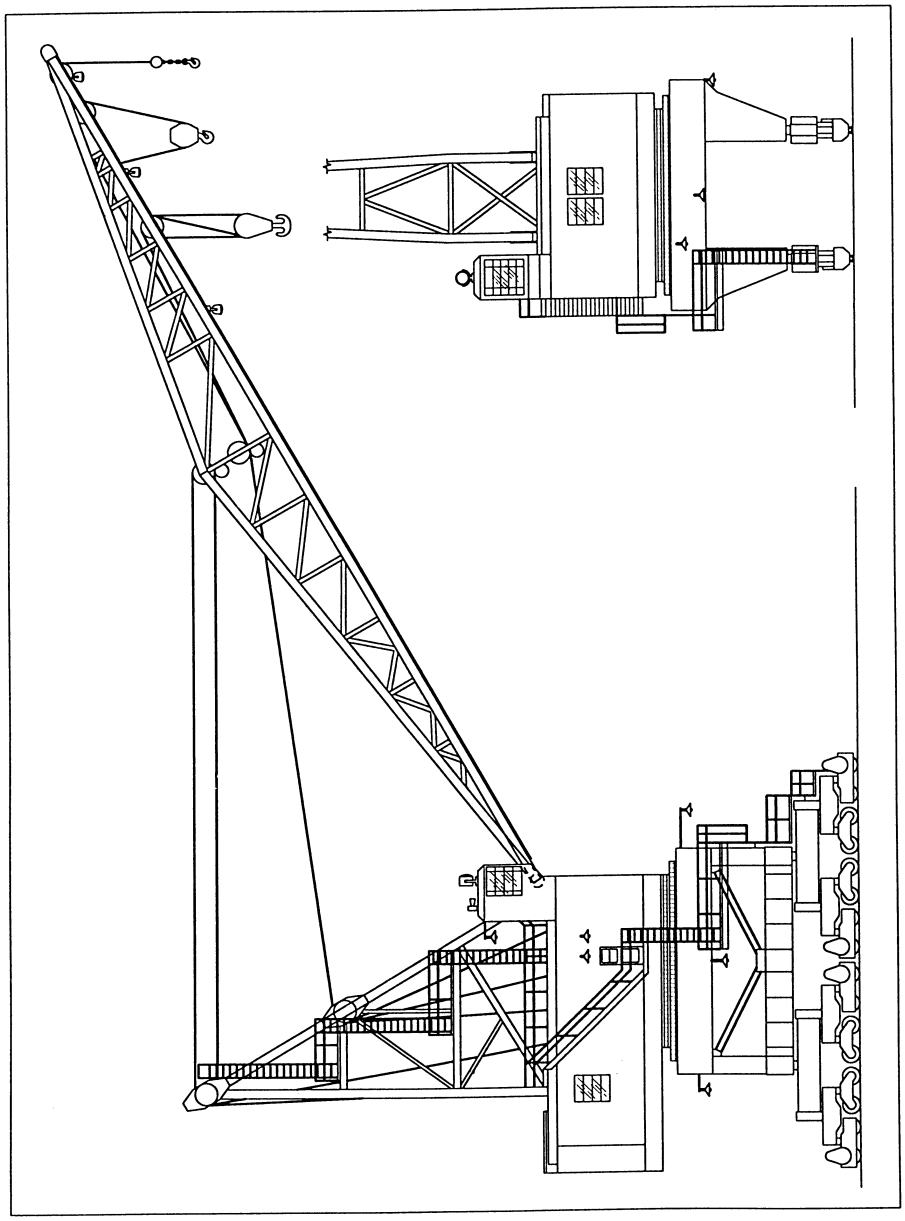

FIGURE 5
PORTAL CRANE (OLDER DESIGN)

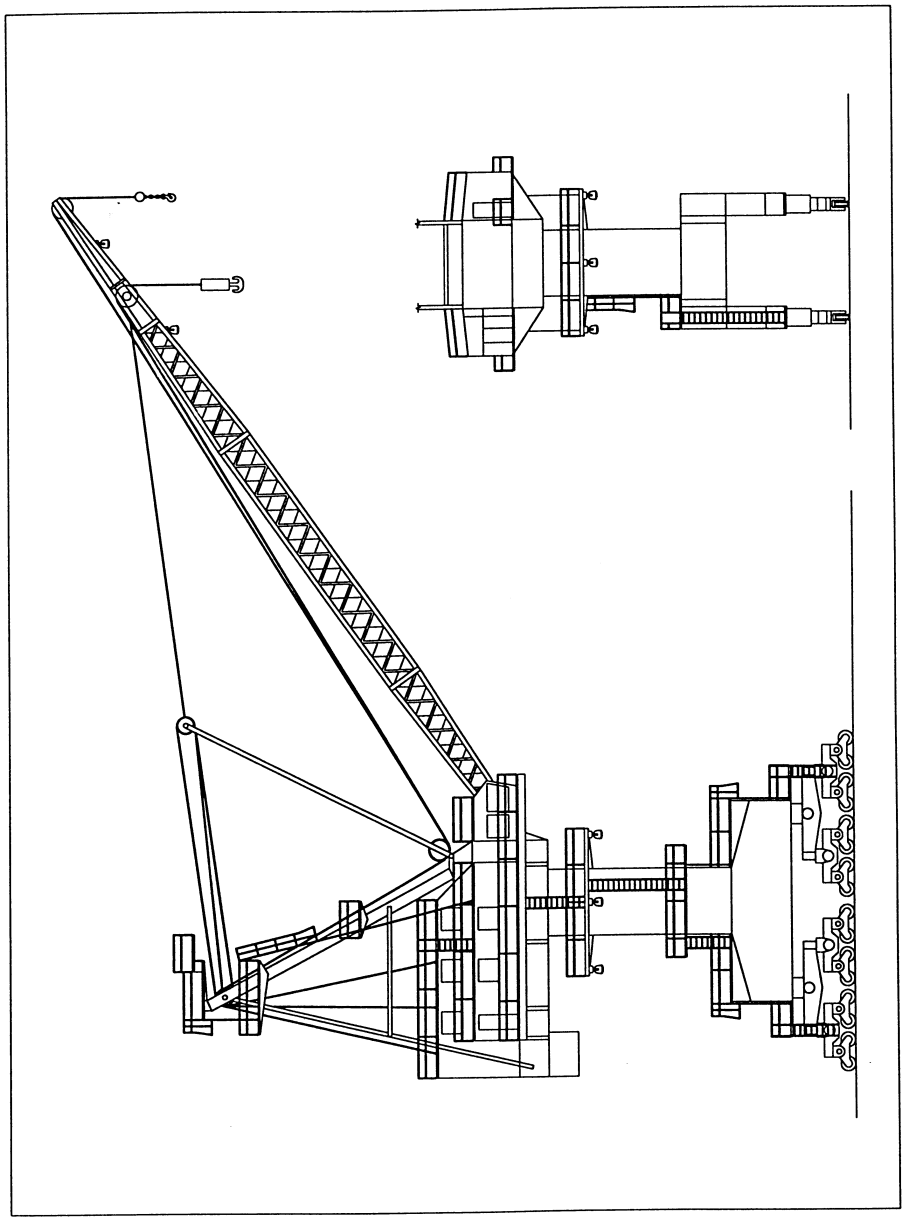

FIGURE 6
PORTAL CRANE (NEWER DESIGN)

Although less noticeable than the difference between the booms and gantry structures, the rotate mechanism of the newer cranes differs even more dramatically from the old roller path design. Unlike the older cranes, which rotate on a simple assembly of exposed rollers on bent rail or cast segments with a king pin for centering, the newer cranes rotate on a precision sealed roller bearing.

2.4.2 Distinctive Features. Portal cranes have the ability to travel anywhere within their rail network (circuit) and provide heavy lift capability at a reach unmatched by any other outdoor traveling crane. The wide and high portal opening with narrow travel trucks and gantry legs of the portal cranes minimize obstruction in the busy work areas where they operate.

Corrosion is always a major maintenance concern with any outdoor crane, but this problem is particularly acute with the intricate cage-like construction of the old gantries and booms with crevices and water pockets throughout. The mainly welded construction of newer cranes presents a smooth exterior which minimizes this maintenance burden.

2.4.3 Industry Standards. There are no industry design standards for portal cranes. Structurally these cranes are designed in compliance with the applicable requirements of the Manual of Steel Construction, published by The American Institute of Steel Construction, Inc.

ASME B30.4, Portal, Tower, and Pillar Cranes, published by the American Society of Mechanical Engineers. This standard focuses primarily on the safety aspects of the design and operation of the cranes.

API Specification 2C, Specification for Offshore Cranes, published by American Petroleum Institute, prescribes a method for calculation of loads on the rotate bearing. However, since rotate bearings and their mounting are a specialty of a limited number of manufacturers, their guidance for bearing selection and installation should be followed when it is available.

2.5 Floating Cranes. Floating cranes are comprised of the upperworks of portal cranes mounted on barges. These cranes are intended for operation in sheltered waters but are designed for towing in the open sea. They are not self-propelled, except that they are equipped with capstans which pull on mooring lines to reposition themselves over short distances. Floating cranes are versatile – they can be positioned between the shore and the vessel for rapid loading or off-loading, inside a drydock in close proximity to the work area, or anywhere within the basin. As with the portal cranes, the older designs (shown in figure 7) feature deep triangular truss booms, while the newer cranes (shown in figure 8) have slender lattice booms. Older floating cranes are “straight-line” rated, the newer designs are variably rated through most of the operating range.

2.5.1 General Description. The upperworks of the floating crane is supported on a tub (structural column) built into the barge near the stern. As a counterbalance to the crane, the bow end of the barge deck is provided with a thick (usually 1.5 to 2.0 inches) steel cargo laydown area. The upperworks, including the rotate bearing, is similar in design to that of the portal crane, with only a few exceptions:

a) Boom design must consider side pulls due to list and trim of the barge.

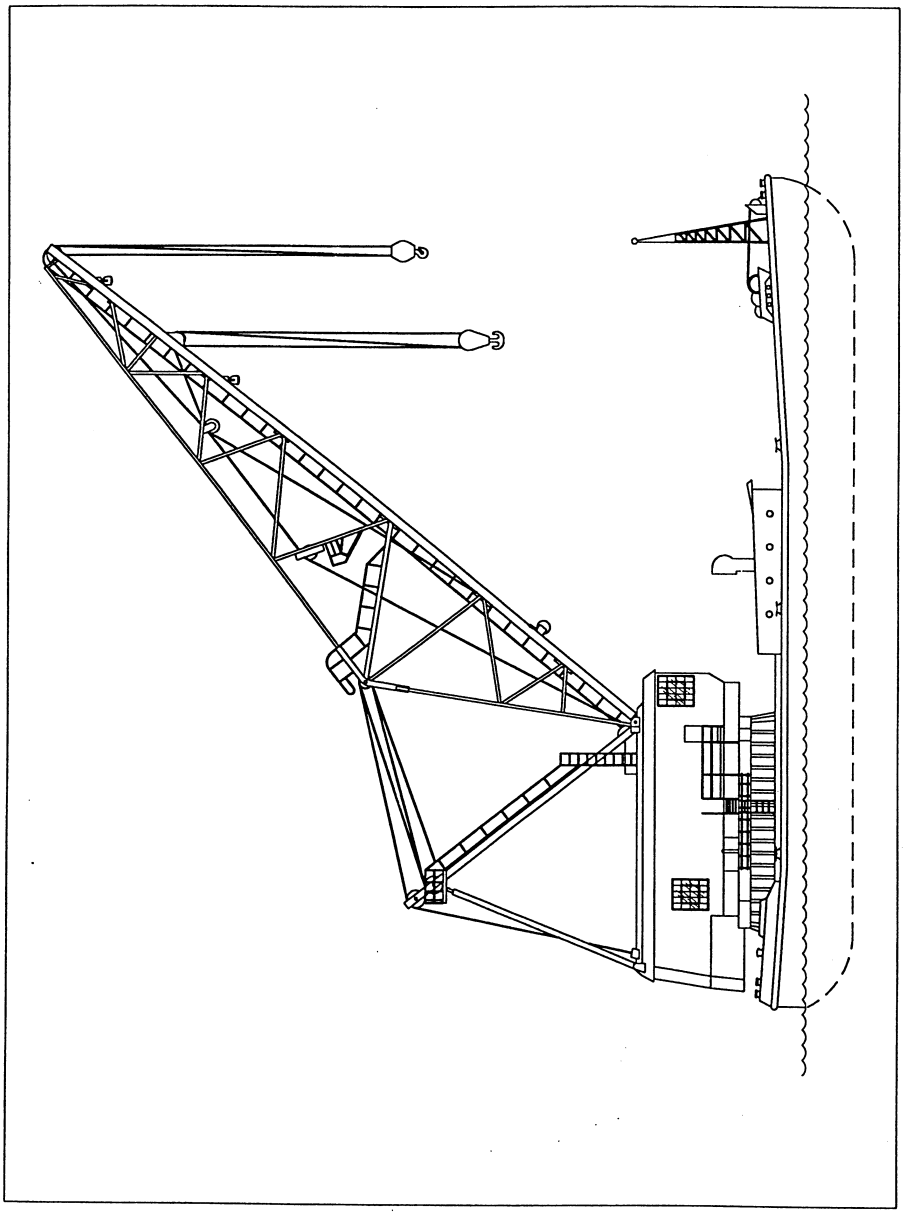

FIGURE 7
FLOATING CRANE (OLDER DESIGN)

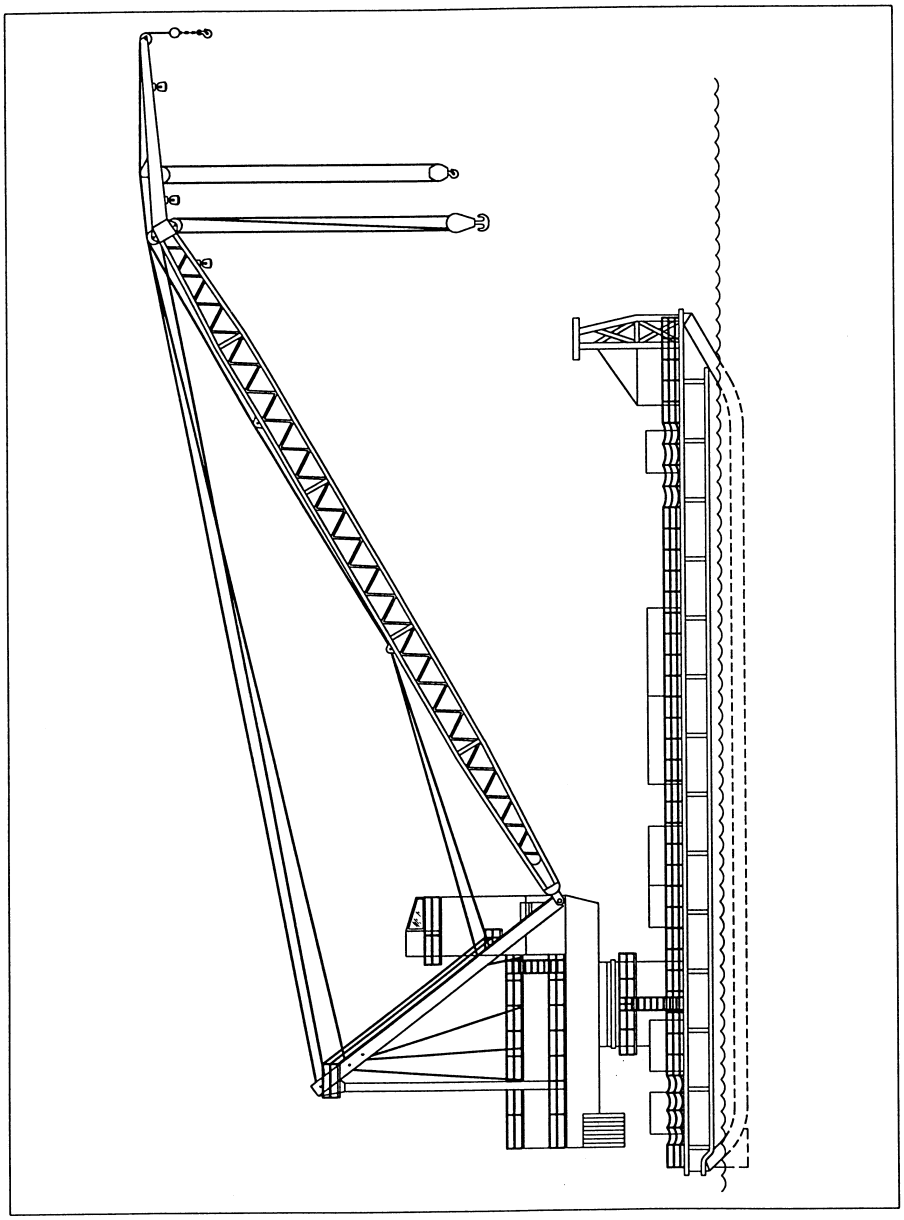

FIGURE 8
FLOATING CRANE (NEWER DESIGN)

b) The rotate drive and the rotate bearing designs must consider rotation out of the horizontal plane due to the list and trim of the barge.

c) The diesel engine-generator set and fuel tank may be located in the barge, rather than the machinery house.

d) Hydrostatic drives are the norm on modern cranes.

e) Tie down and locking provisions for the boom and upperworks are required for towing in the open seas.

2.5.2 Distinctive Features. Since it is desirable to maintain a low center of gravity for stability in the water, the elevation of the machinery deck is restricted. Compared to portal cranes, all portions of floating cranes are at a low elevation. To mitigate this condition, the boom hinge pin and operator's cab, are often raised above the roof level of the machinery house. The rated capacities and reaches range up to 115 tons at 80 feet, respectively. The booms frequently have a long extension in the form of a jib to increase the reach of the whip hook for servicing masts and periscopes of Navy vessels.

A conspicuous boom rest is located at the bow end to support the boom when the crane is not operating and to secure it for towing. A pilothouse is sometimes installed at the bow, often within the boom rest.

2.5.3 Industry Standards. The design of barges is regulated by Rules for Building and Classing Steel Barges, published by the American Bureau of Shipping. The barge design includes the reinforced circular column (tub) which supports the roller path or the rotate bearing of the floating crane upperworks. Structurally these cranes are designed in compliance with the applicable requirements of the Manual of Steel Construction, published by the American Institute of Steel Construction, Inc.

API Specification 2C, Specification for Offshore Cranes, published by the American Petroleum Institute, prescribes a method for calculation of loads on the rotate bearing.

ASME B30.8, Floating Cranes and Floating Derricks, published by the American Society of Mechanical Engineers. This standard focuses primarily on the safety aspects of the design and operation of these cranes.

Various U.S. Coast Guard regulations impose seaworthiness, safety, and human occupancy requirements.

2.6 Container Cranes. Container cranes are optimized for rapid loading and off-loading of standard shipping containers. The containers are transferred between the container ship and the dock storage area or the truck carriers. The crane rails are straight and the waterside rail is located close to the edge of the wharf or pier. Container cranes in commercial service are often shore-powered, with the electric power cable spooled on a reel and laid in a trough running parallel to the land side rail; those in Navy service are self-powered with an on-board diesel engine-generator set. These cranes are equipped with several standard lengths of frames (spreaders) to engage different sizes of containers both above deck and inside the ship's holds. The standard maximum weight of containers is either 40 or 50 long

tons. It is a common practice to provide a load beam with one or several hooks, which can be readily installed in place of the spreader for handling bulk cargo. Figure 9 shows a typical container crane.

2.6.1 General Description. The primary structural components of container cranes are the gantry, horizontal main beams, luffing boom, and an overrunning or underrunning trolley with an adjacent operator's cab. When in use, the boom is lowered to the horizontal position in line with the main beam and above the container ship deck. The boom length is designed to reach across the entire width of the stacked containers on the ship. The horizontal main beams form a rearward extension of the boom over the container storage area on the wharf or pier. These cranes have non-rotating upperworks; they must reposition themselves on the rails to be in line for each row of containers to be handled. The boom is luffed up to clear any ship superstructure before the crane moves along the rails. When the container crane is not in use, the boom is locked in a nearly vertical position.

The containers are engaged by twist locks located in the corners of the lifting frame (spreader). The spreaders may be of fixed length designed to engage only one size of containers, or they may be telescoping to fit any length of container. The standard dimensions of containers are 8 feet high, 8 feet wide, and 20 to 40 feet long. The spreaders are readily disengageable from the hoist head block.

The hoist may be located either on the trolley with the wire ropes descending downward from the wire rope drum to the four sheaves in the corner of the head block frame, or in the machinery house with the wire ropes routed horizontally to the trolley and downward to the head block frame sheaves. The four wire ropes are independent (non-equalized). The head block is designed for quick mechanical and electrical connection to its counterpart on the spreader. Electric power is delivered to the spreader hydraulic devices via a suspended coiled power cable.

2.6.2 Distinctive Features. The structure is a rigid traveling gantry with a fixed main beam and a luffing boom. When the boom is in the horizontal (operating) position, it is supported by steel stays, which are attached to the top of the A-frame. The machinery house and an integral or separate diesel engine-generator set enclosure are installed on top of the main beam, and both are equipped with a built-in service crane (either OET or underrunning type) of adequate capacity to handle the heaviest components which may require removal. The machinery house and enclosure floors have removable hatches through which the service crane hooks can reach the ground level.

These cranes are designed specifically for handling standard containers at a rapid rate (up to 35 per hour) and a high degree of safety.

2.6.3 Industry Standards. There are no industry standards specifically for the design of container cranes. Structurally these cranes are designed to comply with the applicable requirement of Manual of Steel Construction, published by the American Institute of Steel Construction, Inc.

ASME B30.24 (under development), Container Cranes, will be published by the American Society of Mechanical Engineers. This standard focuses primarily on the safety aspects of the design and operation of the cranes.

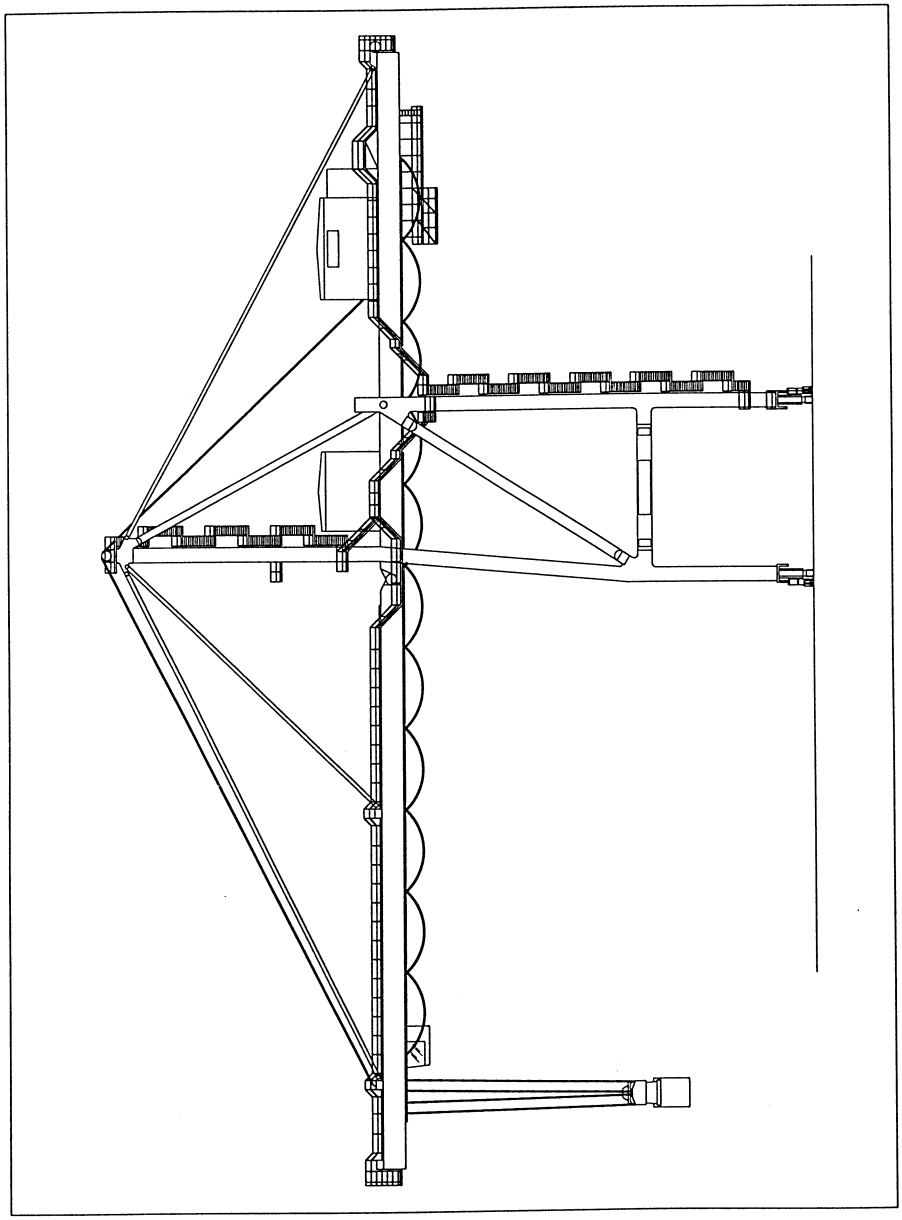

FIGURE 9A
CONTAINER CRANE

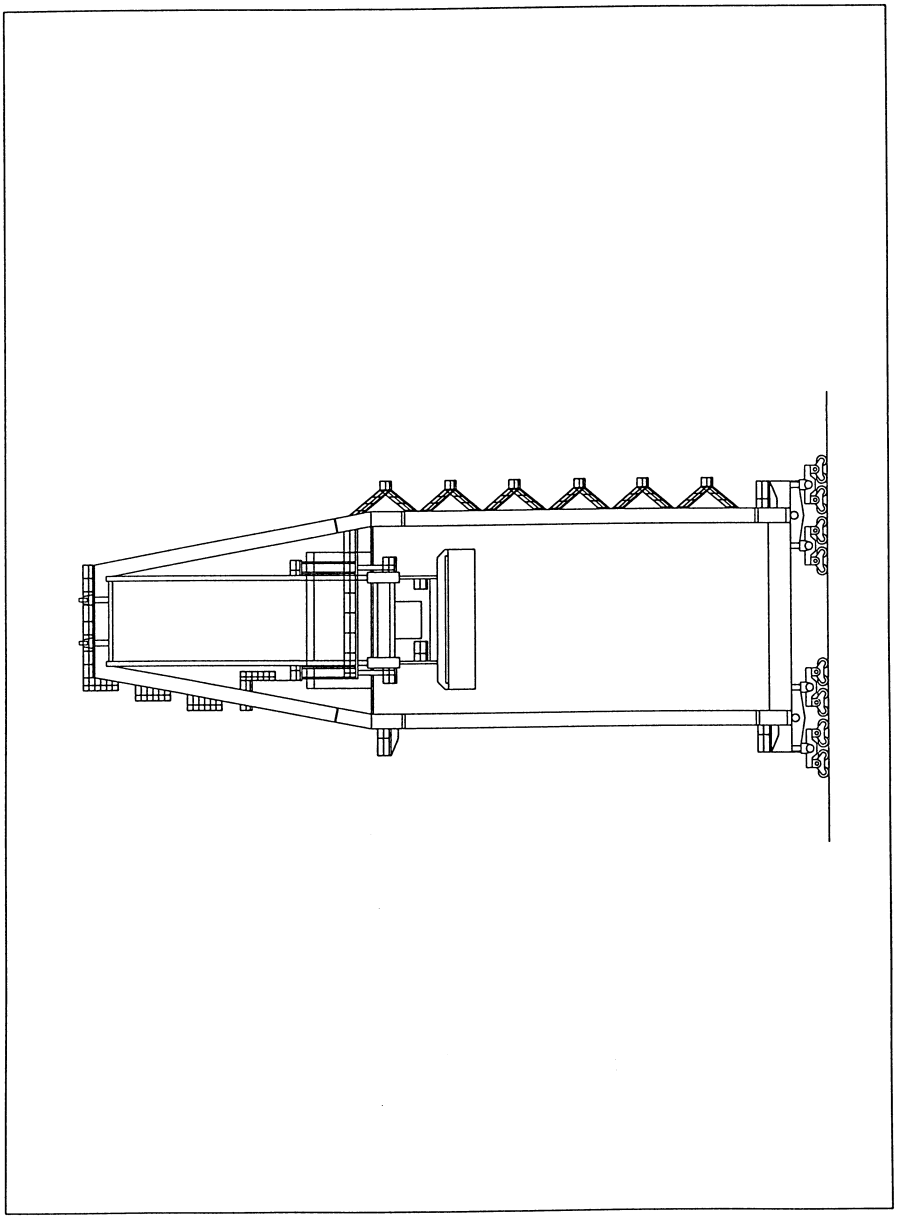

FIGURE 9B
CONTAINER CRANE

2.7 Mobile Cranes. Mobile cranes are available in a variety of configurations – wheel-mounted or track-mounted (crawler); solid telescoping boom or fixed length lattice boom; and crane operator stations on the chassis, on the upperworks, or both. These cranes are standard models of established manufacturers. They are designed for highway travel/transportation and of necessity are optimized within the highway weight and size restrictions. As a direct result of these restrictions, the stability of mobile cranes is poor compared to that of portal cranes.

2.7.1 General Description. Wheel-mounted cranes (as shown in figure 10) utilize an automotive style of chassis with a standard driver's cab for road travel. Crane controls may be located in the same fixed cab or a separate operator's station on the rotating upperworks. On crawler cranes (as shown in figure 11) a single cab is used for driving and crane operation. Mobile cranes are equipped with hydraulically extendable outriggers near the corners of the chassis, which must be deployed to stabilize the crane when making a lift. On some models, the outriggers may not have the capability of relieving all of the weight from the wheels. A counterweight is always installed on the upperworks, which rotates on a moment carrying bearing or on rollers/roller path with hook rollers to take up the overturning moment.

Telescoping booms are luffed and extended by means of hydraulic cylinders. Lattice booms are luffed by means of a wire rope hoist and sheaves at the top of the upperworks. The design of lattice booms permits disassembly of the boom sections to shorten their length for road travel or to increase the length for longer reach when required.

The crane functions on mobile cranes are generally powered by hydraulics – either motors or cylinders. Some models use a combination of hydraulic and mechanical drives. The reeving systems are single reeved and arranged for easy conversion to any of several configurations for the desired combination of hoist speed-lifting capacity.

2.7.2 Distinctive Features. The main virtue of mobile cranes is their ability to travel to the work site and position themselves in the most advantageous location for the task. Their foremost weakness is limited stability, even when set on outriggers, and inability to travel with any significant load on the hook. Operators' understanding of the site/ground conditions and the reference to the proper chart for crane stability limits for each particular upperworks orientation and boom length are critical to safe operation.

2.7.3 Industry Standards. There are no comprehensive industry standards for the design of mobile cranes. ASME B30.5, Mobile and Locomotive Cranes, focuses primarily on the safety aspects of the design and operation of these cranes. SAE J1028, Mobile Crane Working Area Definitions, provides in graphic form the limiting position of any load for operation within the major working quadrants.

SAE J1289, Mobile Crane Stability Ratings, provides the methodology for calculating the tipping load of a mobile crane.

2.8 Gantry and Semi-Gantry Cranes. These cranes are similar to the bridge cranes in many respects. But unlike the OET and underrunning cranes, where the lifting height is established by the elevation of the runway rails, gantry cranes travel on ground-level rails and obtain their lifting height by means of tall

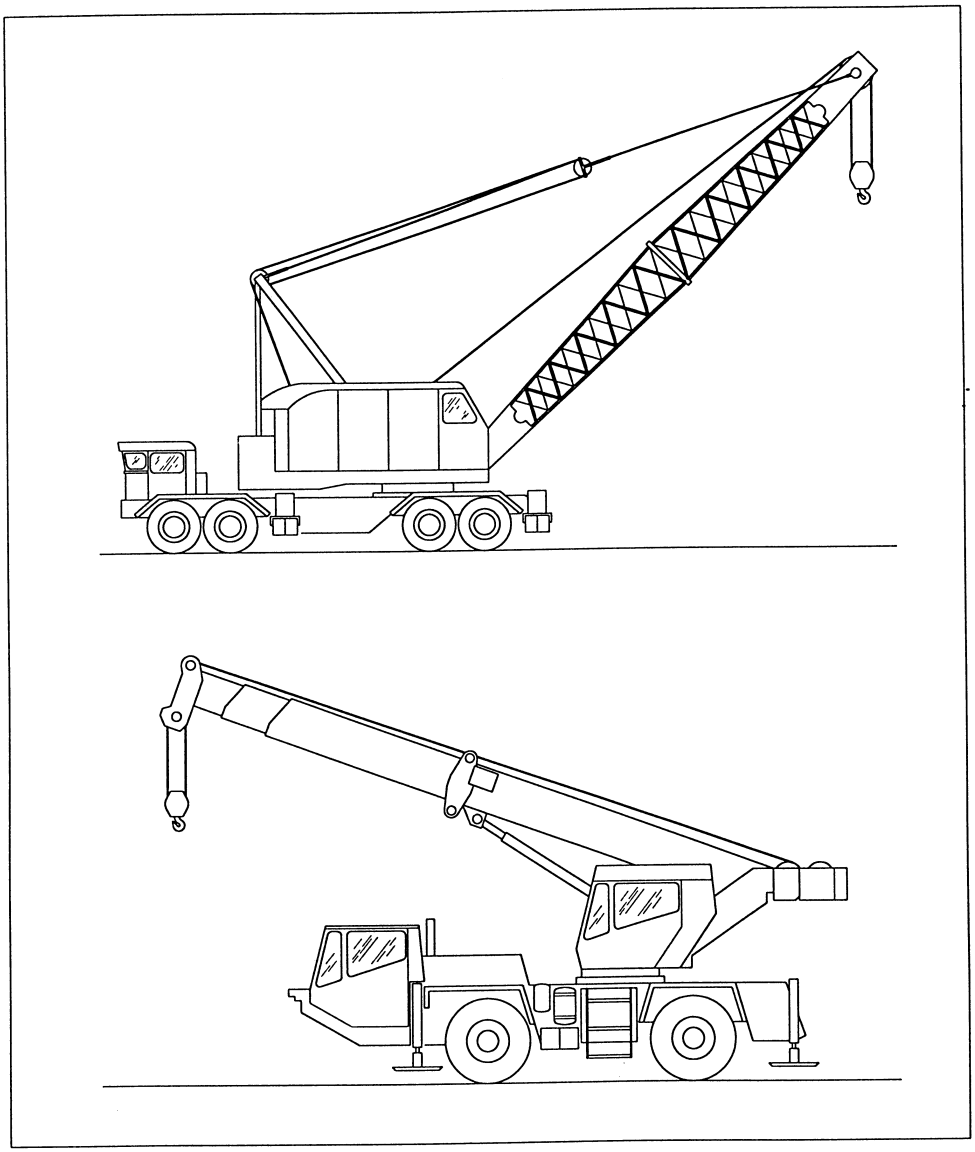

FIGURE 10
MOBILE CRANES (WHEEL-MOUNTED)

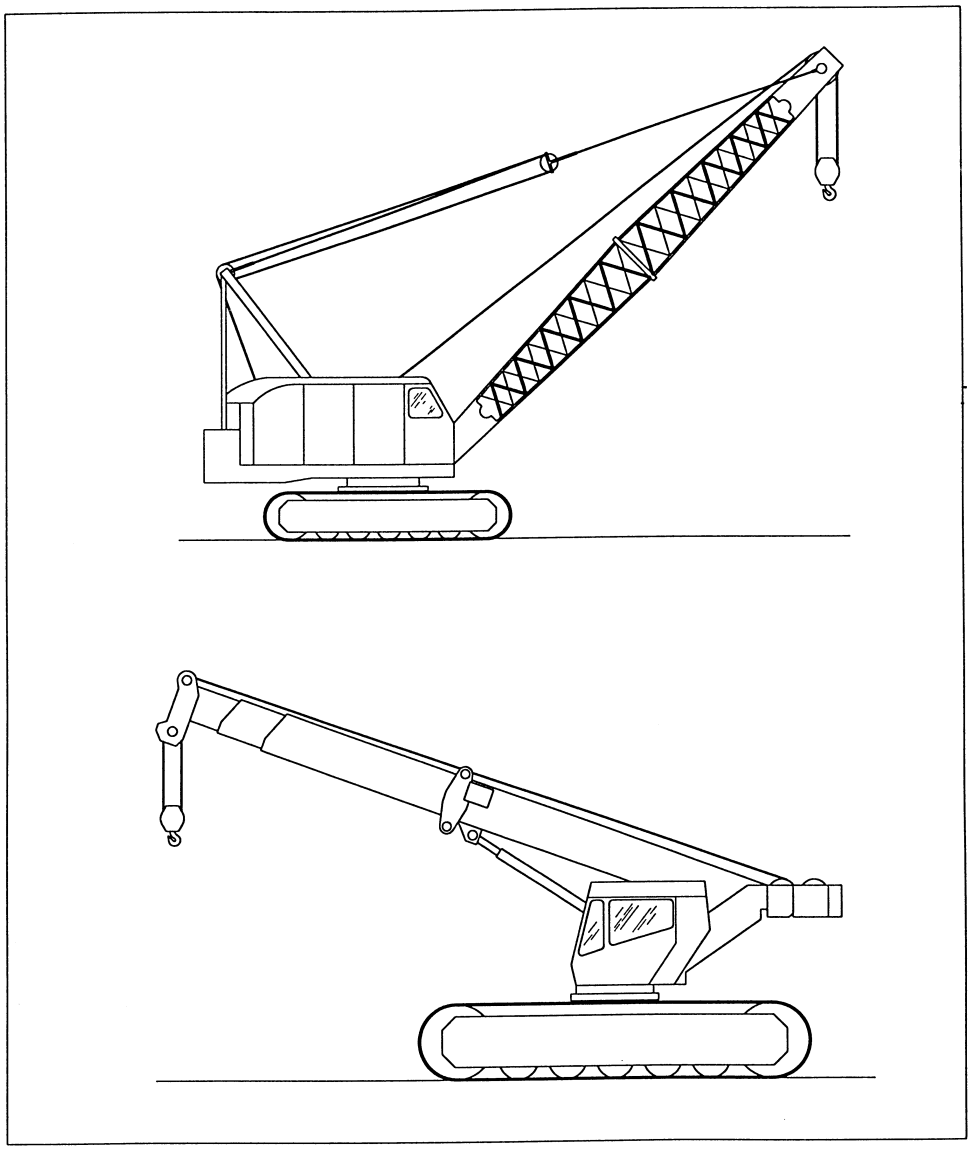

FIGURE 11
MOBILE CRANES (TRACK MOUNTED)

vertical frames interposed between the end trucks and the bridge girders. In the case of the semi-gantry cranes, only one end is so configured – the other end is a typical bridge crane running on an elevated rail. They are not limited by any overturning moment due to rated load and may be of any capacity that the rails can support.

Since the only structural support that is required for gantry cranes is a pair of ground level rails, they can be installed in buildings without the major investment of an overhead runway. Semi-gantry cranes are well suited to outdoor installations such as plate yards adjacent to buildings – one end running on a ground level rail and the other on a high rail near the top of the wall.

Gantry and semi-gantry cranes offer broad design flexibility and can be configured for many varied functions. The bridge structure may be of the double girder arrangement with an overrunning trolley or a single girder with an underrunning hoist/trolley unit. Crane controls may be located in an operator's cab (on a sill beam, bridge, or trolley) or on a pendent pushbutton station.

2.8.1 General Description. The bridge structure is designed to the same criteria as the OET and underrunning cranes, whichever is applicable to the particular configuration. The upper part of the vertical frame serves as an end tie for the bridge girders. The lower end of the vertical frame incorporates a sill beam with a two-wheel end truck at each end. Sturdy braces between the vertical frames and the bridge girders provide the required strength and rigidity to the gantry structure. All crane motions are driven by electric motors. Electric power is transferred from a fixed location at the elevation of the bridge girders to the crane by means of collector shoes sliding along rigid conductors parallel to the bridge girder end ties.

Virtually all large capacity gantry and semi-gantry cranes are custom designed. Figures 12 and 13 show the gantry and semi-gantry configurations, together with some of the available options.

2.8.2 Distinctive Features. Large capacity gantry cranes (usually 40 tons or greater) are sometimes powered by an on-board diesel engine-electric generator set which is mounted on the sill beam. When an operator's cab is provided, it is most often placed on the sill beam. However, depending on the intended service, the operator's cab may be installed on a bridge girder or the trolley.

These cranes can be configured to provide limited capacity outboard of the runway rails by the use of vertical frames with an open center. This arrangement, sometimes called "through-leg", may be used with either overrunning or underrunning trolleys and hoist/trolley units.

Standard commercial rubber-tired gantry cranes are often used in container handling operations. The maximum practical height limits the stacking height to three containers.

2.8.3 Industry Standards. The governing industry standard for gantry (and semi-gantry) cranes is CMAA Specification #70, Specification for Top Running Bridge and Gantry Type Multiple Girder Electric Overhead Traveling Cranes, published by the Crane Manufacturers Association of America, Inc. The safety aspects of the design and operation are addressed in ANSI/ASME B30.2, Overhead

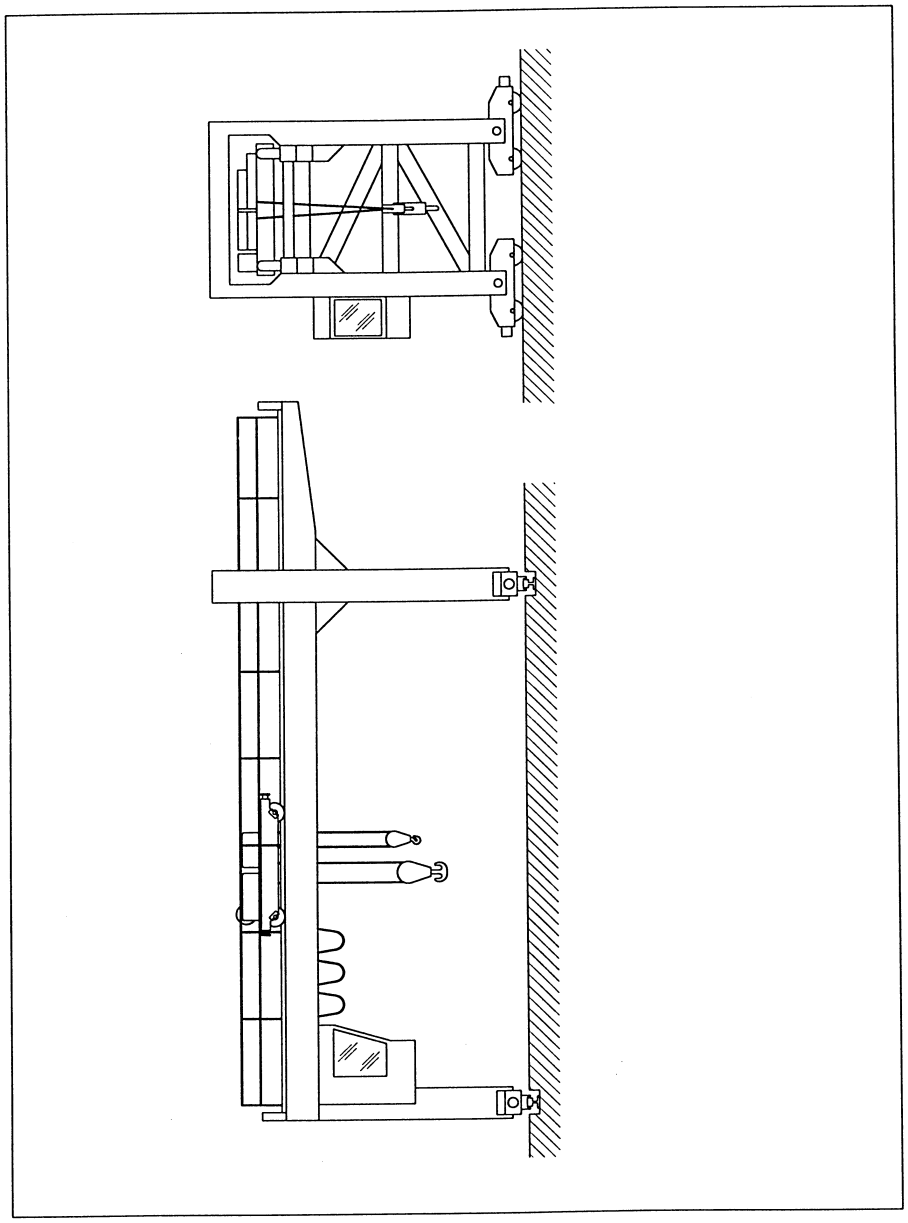

FIGURE 12
GANTRY CRANE

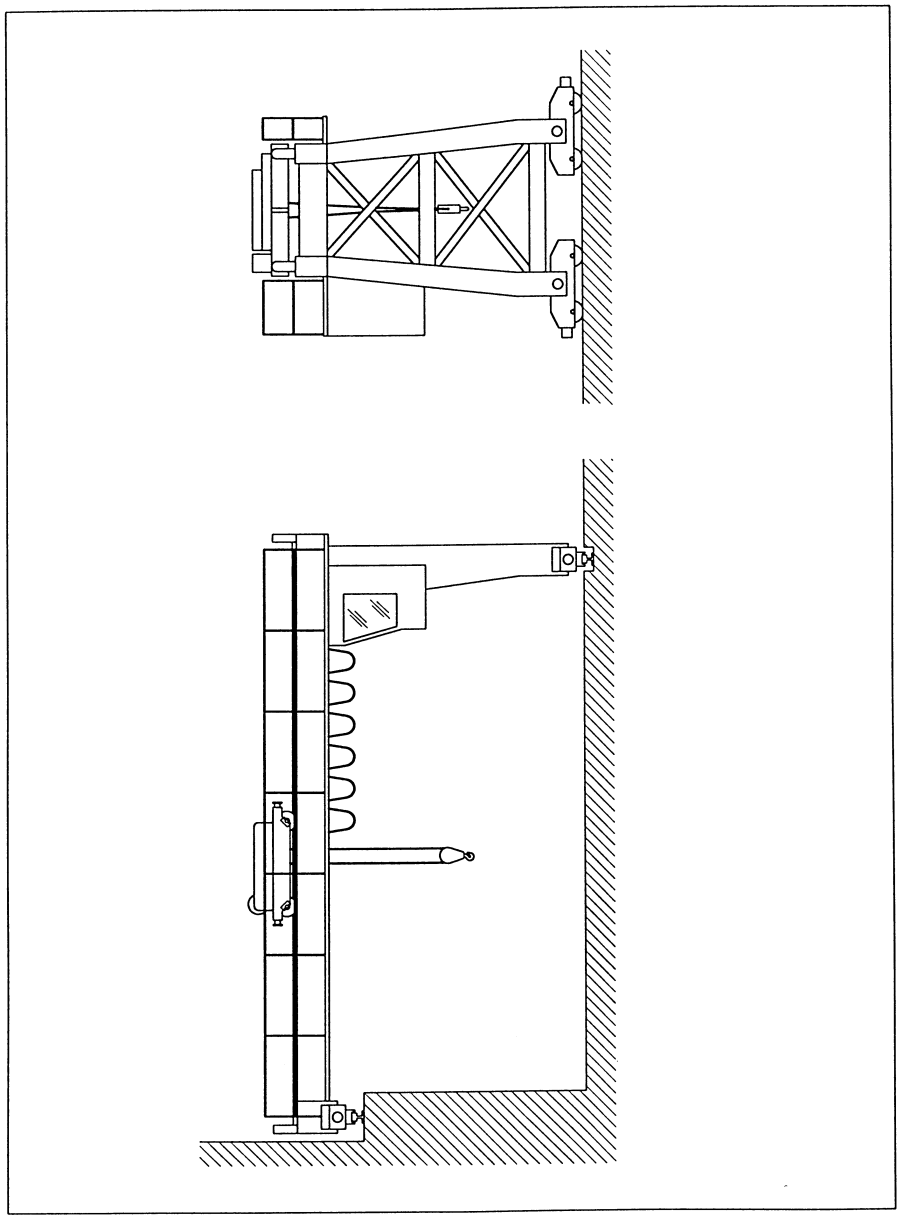

FIGURE 13
SEMI-GANTRY CRANE

and Gantry Cranes (Top Running Bridge, Single or Multiple Girder, Top Running Trolley Hoist) and ANSI/ASME B30.17, Overhead and Gantry Cranes (Top Running Bridge, Single Girder, Underhung Hoist), published by the American Society of Mechanical Engineers.

Section 3: COMMERCIAL CRANES, MONORAIL HOISTS, AND LINE HAULING MECHANISMS

3.1 Cranes. Standard commercial crane types, such as locomotive and revolving cranes, are designed to crane industry specifications, and are optimized for specific applications. They may be used at their rated or reduced capacities, at the discretion of the using activity.

3.1.1 Locomotive Cranes. Locomotive cranes are powered by diesel engine-generator sets and are self-propelled. They are available with free over-side rated capacities of up to 55 tons and up to 150 tons when set on outriggers. Standard commercial locomotive cranes are designed to comply with ANSI/ASME B30.5, Mobile and Locomotive Cranes.

3.1.2 Pedestal and Revolving Gantry Cranes. These cranes are designed as standard commercial upperworks units for mounting on tubular pedestals or other support structures. The booms may be of the fixed-length lattice or of the box-section telescopic design. They are designed for road transportability and ready installation on various support structures, and of necessity, lack some of the customary maintainability and service life prolonging features of Navy portal and floating cranes.

Pedestal cranes, which are intended for offshore service on oil rigs, are designed to comply with American Petroleum Institute Specification API 2C. They may be powered either with an onboard diesel engine or from a remote electric power source. The drives are hydraulic or direct mechanical type. Drive machinery on some standard designs is only partially enclosed by a machinery house, but the exposed equipment is required to have other means of adequate protection from the corrosive marine environment. Stainless steel hydraulic lines and special exterior paints are among standard options.

Revolving gantry cranes are similar in design to the pedestal cranes, but may not comply with Specification API 2C and are not optimized for the marine environment. They are normally installed on traveling gantries (portal bases).

3.2 Monorail Systems. Monorail installations utilize the same hoists and hoist/trolley units as the underrunning cranes. Monorail layouts may be straight, with curves, open or closed loops of patented track. The suspension must be either laterally braced flexible type or rigid. Standard track switches, both electrically or manually operated, are available to permit hoist/trolley units to transfer between adjacent sections of the monorail layout. The switches include interlock mechanisms for positive track alignment and automatically activated forks (stops) to prevent a hoist/trolley unit from rolling off an end of the track. Standard commercial monorails are designed to comply with ASME B30.11, Monorails and Underhung Cranes.

Electrically powered hoist/trolley units on curved track require rigid electrification curved to follow the track at a fixed distance. Standard electrification hardware is available to permit smooth crossing of collector shoes at the switches to maintain uninterrupted electric power. Motion control is normally from a control station suspended from the hoist/trolley unit. Alternatively, the motions may be controlled by remote means, such as infrared or radio signals.

3.3 Line Handling Mechanisms. Various line handling (hauling) mechanisms – such as capstans, windlasses, and winches, are standard commercial products

intended primarily for installation aboard barges and floating cranes for mooring and re-positioning along the piers. These mechanisms are designed to marine industry specifications for service aboard seagoing vessels. They should be used at their rated capacities.

3.3.1 Capstans. Capstans have a smooth drum on a vertical axis, with its bottom end connected to the drive mechanism, and its top unobstructed. Unlike hoists, there is no mechanical anchor for the rope, the drum develops sufficient friction with the mooring line (non-metallic rope) from a number of manually wound “dead wraps” to begin pulling the loaded end of the rope. The unloaded end is handled manually as it pays off the drum and is coiled on the deck. The number of friction producing dead wraps remains constant during the hauling process. Capstans are normally powered by electric motors.

3.3.2 Windlasses. Windlasses are a modification of capstans, in that, the drum is replaced by a pocketed and slotted wheel (wildcat) that grabs a chain, as it makes half a wrap around it. The unloaded end of the chain is collected on the deck. Windlasses are used on barges and floating cranes primarily for dropping and raising anchors. Windlasses are normally powered by electric motors.

3.3.3 Winches. Winches are identical to single reeved hoists, except that the wire rope live end is routed for hauling, rather than lifting the load. The wire rope drum may be grooved (for single layer spooling) or smooth (for multi-layer spooling). Winches with smooth drums can also be used for hauling mooring lines or chains. Winches are available with either electric or hydraulic motors.

Section 4: DESCRIPTION OF ASSEMBLIES AND COMPONENTS

4.1 Structural. The current Navy inventory of cranes contains a mix of older designs of portal and floating cranes, whose structures are riveted or bolted assemblies of rolled structural plates and shapes; and newer cranes, which make extensive use of major weldments bolted at the main connections. These differences are most apparent on the booms and portal crane bases.

The ASTM A7 structural steel of the older cranes has been replaced by the modern ASTM A36 and higher strength steels. The improved physical properties and chemistry of the modern steels were brought into tighter control to ensure high quality and uniformity of welds. Structural steel used on all outdoor cranes is now required to have a minimum fracture toughness of 25 foot-pounds at 40 degrees Fahrenheit (per Charpy V-notch tests). The older ASTM A307 structural bolts were supplanted by ASTM A325 and A490 high strength bolts.

Standard commercial cranes use structural tubing – round, square, or rectangular - in many of their structural components. Structural tubing and other steel shapes of higher strength than ASTM A36 require strict compliance with the welding procedures of American Welding Society or the original equipment manufacturer.

4.1.1 Bridge Girders for OET, Gantry, and Semi-Gantry Cranes. Bridge girders of the box section design are ideal for OET cranes because of their high capacity to withstand lateral and torsional loads. These girders have parallel top and bottom flanges, two parallel webs, full depth diaphragms for rigidity, intermediate short diaphragms for rail support, and in some cases, longitudinal stiffeners. The girders are designed with a camber to compensate for deflection under load. The flanges and webs are welded together with continuous fillet welds. The interior diaphragms may be welded with intermittent welds. For intermediate spans and capacities, box section girders are sometimes fabricated from structural shapes, or a combination of structural shapes and plates. This type of girder is usually a manufacturer’s standard design utilizing proven design details. The use of custom (non-standard) designed girders of this type should be approached with caution. (CMAA #70 does not address the design of this type of girder in sufficient detail.)

For cranes in CMAA #70, Class C service, with spans of 40 feet or less, and with rated capacities of 20 tons or less, single web girders may be used. (Navy Crane Center (NCC) policy is to specify only Class C or heavier duty service.) The single web girders may be built-up (welded) with the web profiled for the desired camber or they may be standard rolled structural shapes bent (bowed) to the proper camber. External vertical stiffeners are often required on the sides of the web and the flanges. The ends of the bridge girders, both box section and single web type, should be notched (stepped) to fit over the end truck. The girders must be reinforced at the notches with vertical diaphragms and horizontal stiffeners. The bottom flanges should be tapered towards the notches.

The trolley rails should be centered over the top flange and secured with rail clips. The rail clips may be welded directly to the top flange or fastened with nuts and threaded studs welded to the top flange. The rails should be free to shift longitudinally but the amount of movement must be limited by end stops. Optionally, the rails may be positioned directly over one of the box girder webs, in which case

the short diaphragms may be omitted, but the girder box section must be designed for the additional torsional loads due to this eccentric loading.

4.1.1.1 Walkways. OETs should be provided with walkways where space permits. The drive girder walkway, where the bridge drive machinery and electrical control cabinets are mounted, must extend the full length of the girder. The idler girder walkway, as a minimum, should extend from one end truck at least twice the length of the trolley. It is desirable, where space permits, to have a crossover walk between the two girder walkways. The width of the walkways, handrails, toe plates, and gates or safety chains, must comply with OSHA requirements.

4.1.2 End Trucks and End Ties for OET Cranes. On four-wheel cranes, the end truck frames provide strength and rigidity to the entire bridge structure to resist horizontal loads. On large four-wheel cranes, the end trucks are built-up weldments of box section design, with internal diaphragms located under the bridge girder webs. The bottom flanges are notched at the ends and the webs are reinforced to form recessed seats for wheel axle bearings.

On smaller cranes, the end trucks may utilize structural channel sections for webs with external vertical stiffeners and doubler plates around the wheel axle seats. The lower flanges are notched for the travel wheels and the channel webs are slotted from the ends to permit installation and removal of flanged wheel axle bearing housings. Standard commercial end trucks are normally of this type.

On eight-wheel cranes, the end trucks may be pinned (wheel load equalizing) type, or fixed (wheel load compensating) type. The bridge girders are joined by end ties, which provide the strength and rigidity required to resist horizontal loads. End ties may be rigid (for wheel load equalizing) or flexible (for wheel load compensating). If equalizing end trucks are used, the bridge girder and rigid end tie must form a frame that is rigid about its vertical and horizontal (perpendicular to the rail) axes. If compensating end trucks are used, the end tie must be rigid about the vertical axis but relatively flexible about the horizontal axis to permit partial rocking motion for wheel load compensation. Both end tie designs provide for satisfactory load sharing (equalizing or compensating) between pairs of wheels in each corner.

4.1.2.1 Wheel Base. For four-wheel cranes, the wheel base is defined as the center-to-center distance between the wheels' axles. For eight-wheel cranes, the wheel base is defined as the center-to-center distance between the outermost wheel axles. To minimize the undesirable effects of skewing, the wheel base must be at least 1/7 of the runway span (center-to-center distance between the rails).

4.1.3 Bridge Girder-End Tie/End Truck Connections for OET Cranes. On older cranes, the alignment of the bridge assembly was often maintained by the use of close tolerance bolt-to-hole fits. On newer cranes, these connections are slip-critical (or friction type), made with high strength structural bolts. Tapered alignment pins (two per corner) are used to maintain original shop alignment between the bridge girders and the end ties/end trucks when reassembling the joint. The bolt holes and alignment holes should be located close to the webs of the structural member in widened flanges or welded-on flange extensions. Additionally, if required to maintain rigidity in the horizontal plane, gusset plates may be required between the bridge girder and end tie/end truck flanges.

Access holes may be cut in the low stress areas of webs for bolt or nut installation and torquing. Such access holes should be closed with cover plates.

4.1.4 Trolley Frames for OET Cranes. Trolley side frames are built-up box sections of flat plates, channel shapes and flat plates, or rectangular structural tubing. The side frames are joined by cross members at the ends and by intermediate load girts which support the hoists and the upper block sheaves. Steel floor plating, with slots for wire ropes, is often installed over the entire trolley frame. Trolleys are normally supported on four travel wheels.

On smaller cranes, especially those with standard commercial packaged hoists, trolley frame construction varies. It is common practice to omit the floor plates.

4.1.5 Bridge Girders for Underrunning Cranes. The preferred bridge girder design is the “patented track”. The girder cross section has an upper T-section of structural steel and a lower, smaller inverted T-section accurately machined from hard, high-carbon steel. The two T-sections are joined with continuous (but not necessarily full-penetration) groove welds. The lower T-section is available in three standard sizes and is designed to accommodate either flanged or flangeless wheels. It is machined on all sides-presenting smooth side surfaces for guide rollers and a machined bottom surface for traction wheels. The ends of the bridge girders are normally coped and reinforced with gussets and doublers for full strength connection to the end trucks. Bridge girders are normally available in lengths up to about 70 feet and normally are not cambered.

A less costly alternative to the patented track is a rolled structural steel section – either I-beam or wide flange. The drawbacks are the less durable wear surfaces and wider dimensional, straightness, and warpage tolerances.

4.1.5.1 Outrigger Beams. The outrigger beams (if used) may be of any standard structural section which is of adequate strength to mount the electric power conductors and the single-motor bridge drive. The outrigger beam may be used to form a horizontal truss by means of diagonal lacing to the upper flange of the bridge girder. The ends of the outrigger beams are connected to the end trucks or connecting bars.

4.1.6 End Trucks. The underrunning end trucks may be of rigid or flexible design. The rigid end trucks include wheel axle seats at each end; the flexible end trucks are supported by swiveling load bars or carrier yokes. The rigid end trucks are weldments of steel plate or channel sections which are joined and reinforced at each end by U-shaped steel plates against wheel spreading forces and are additionally reinforced with gussets and doublers at the wheel axle seats. The flexible end trucks have the connecting bars as their main structural components. Figure 14 illustrates typical arrangements of both types of end trucks. Underrunning end trucks are usually standard commercial components.

4.1.7 Runways for Underrunning Cranes. The runways are designed with the same patented track sections as the bridge girders. The length of the runways often requires splices between the sections. (The standard track sections are normally

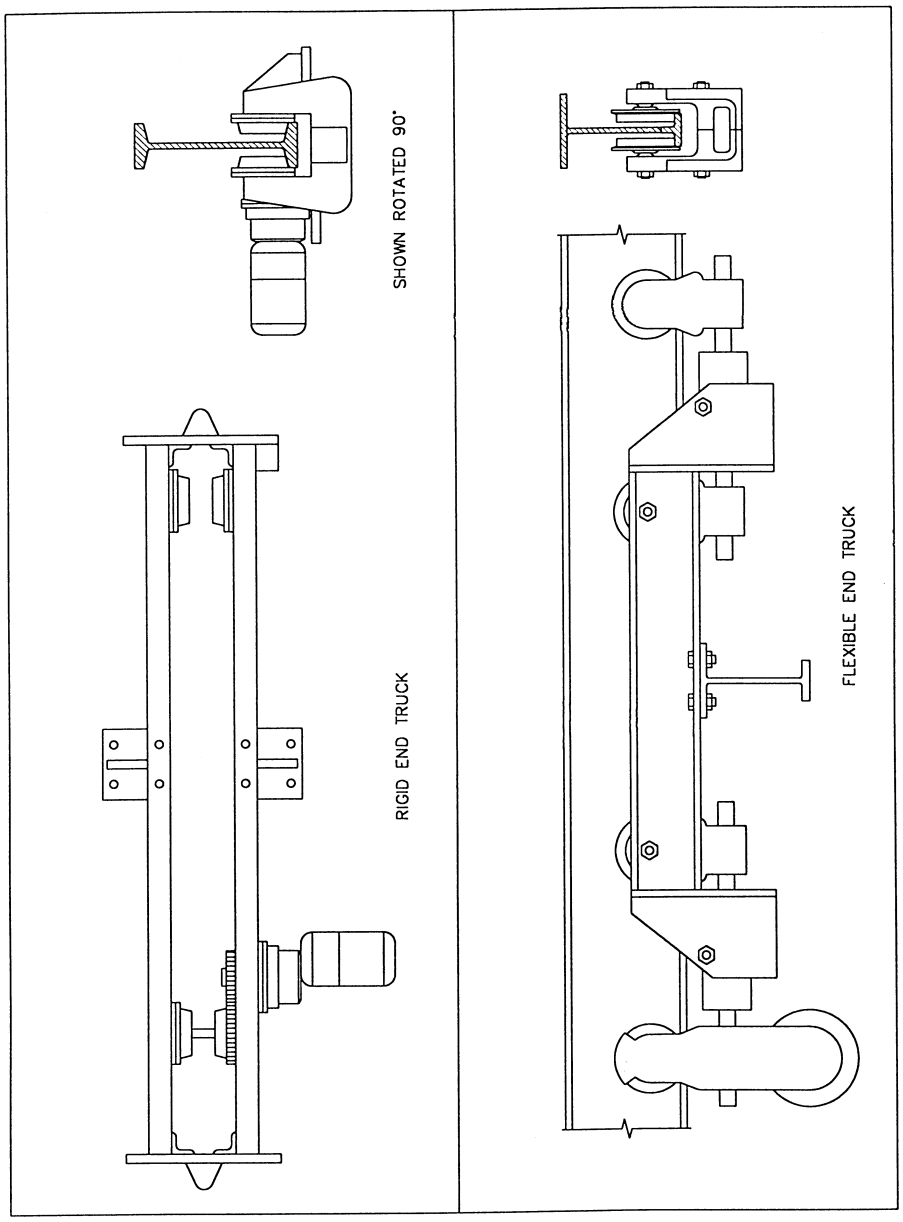

FIGURE 14
UNDERRUNNING END TRUCKS

available in lengths up to 70 feet.) The splices are made with flat plates on both sides of the upper T-section webs. The lower T-section end must be positioned to minimize the gap on the running surface for smooth crossing by the wheels. The splices must be located directly under the support members.

Patented track is available in curved sections with any radius of curvature down to 48 inches. This fseature permits the patented track to be laid out in the form of closed loop circuits. (Electric power for hoist/trolley units can be delivered through matching rigid conductors attached directly to the patented track.) I-beam track can be bent to a 20-inch radius.

4.1.7.1 Runway Suspension Systems. Depending on the available headroom in the building, the runway suspension system may be rigid or flexible. The rigid suspension system has the upper flanges of the patented track bolted directly to the building structure or to interposed solid spacers. These joints usually include shims to obtain the required levelness. The flexible runway suspension systems support the patented track on vertical alloy steel rods with threaded ends. The rods are threaded into self-aligning gimbals or ball-and-socket fittings, which are bolted to the building structure and the patented track. Additional lateral and longitudinal tie rod braces are usually installed to limit the sway of the runway. Flexible suspension systems for cranes with rigid end trucks normally have one patented track installed without lateral braces to avoid travel truck binding due to minor gauge variations. All flexible suspension components are standard commercial items.

Suspension of curved sections of runways requires particular attention to minimize the introduction of lateral bending moments (twisting) of the patented track.

4.1.7.2 Extensions and Transfer Sections. The bridge girders may extend as cantilevers beyond the end trucks to extend hook approaches or to facilitate the transfer of the hoist/trolley unit to an adjacent crane or spur track. With such arrangements the girder lower flanges must be brought into close alignment and the gap between them must be held to a minimum. Interlocks are required to engage and lock the girders in alignment during hoist/trolley transit. In cases where the opposite bridge girders cannot be brought into close proximity, a short transfer section is installed to span the separating distance.

On cranes whose hoist/trolley units transfer directly to another bridge girder, the end trucks should be located near the ends of the bridge girders to minimize the relative deflections at the gap. Also, the adjacent runway tracks and the transfer section should be supported from a common structural member. This will help to maintain the alignment of the lower flanges for smooth wheel transit.

4.1.8 Cantilevered Booms. The booms of cantilevered cranes may be of any form or cross section – box, single web, or monorail. Because of the wide variety of boom configurations and their supports, there are no established designs or analyses for them. Each design is unique in some aspects and must be designed in accordance with the applicable requirements of the structural code. The same applies to the boom support structures (pillars, wall brackets, and vertical frames) and connections. These booms are relatively short and therefore do not require any camber; however,

the boom should be installed with a slight upward slope towards the tip to compensate for deflection under load.

4.1.9 Pillar Anchor Bolts. Freestanding pillars require an integral base with a wide foot print for anchoring them to the concrete foundation. The preferred installation of anchor bolts (ASTM A36 threaded rods) is to have them cast directly into the concrete base. The embedded ends may be terminated with heavy steel plates/washers with nuts on both sides. Anchor bolts with bent ends (J or L bolts) are permitted only if recommended by the manufacturer of the standard commercial crane. Installation of anchor bolts into drilled holes by means of bonding compounds is an acceptable alternative for existing concrete foundations.

4.1.10 Portal and Floating Crane Truss Booms. The deep triangular truss booms of older cranes are assembled from standard open structural shapes fastened with rivets or bolts. There are few, if any, weldments on these booms. Every riveted or bolted joint is susceptible to rusting at the faying surfaces and requires frequent inspection and maintenance. A common design feature is the back-to-back arrangement of lacing members separated by the width of the flange thickness of another structural member. The narrow separation between the flat faces of such lacings provides limited access to clean and preserve them against corrosion. Many rivets corrode and loosen within their bores and must be replaced. The commonly accepted replacement fasteners in place of rivets are the high strength ASTM A325 bolts.

4.1.11 Portal and Floating Crane Lattice Booms. The lattice booms of newer cranes are assembled from three or four all-welded sections bolted together at the main chords. The ends of the main chords have heavy bolting plates welded, gusseted, and machined for a close fit with the mating boom section. Each boom section supports a walkway along the entire length of the boom to provide access to all lighting fixtures, sheaves, rollers, and lubrication points. The walkway is accessible from the machinery deck with the boom level.

Traditionally the main chords were required to be either structural angles or wide flange beams. Tubular sections for main chords were avoided because damage on them can be repaired only by cutting and welding, and because the condition of the interior surface could not be known with certainty. Damage on main chords of the open structural sections in most cases is easily repaired by cold straightening. The tubular sections - either round, square, or rectangular – were permitted for lacing members because their convex shape minimizes the forming of water pockets on the boom. Current NCC policy is to permit tubular sections for all structural members of booms, provided they are capable of being weld repaired in the field. The ends of tubular sections must always be seal welded to prevent water intrusion.

The lower (foot) section of the boom is tapered in profile and terminates with two hinges which may contain reinforced housings. The hinges should be spread wider than the width of the basic boom structure to limit the wind loads and inertia loads on the hinges. The hinge arrangements utilize bronze bushings, which may be installed either in the boom foot section or the base supports. The upper (tip) section of the boom is also tapered in profile and carries the whip hoist sheave at its end, and inboard, the auxiliary hoist sheaves if the crane is so equipped. The main hoist sheave nest and the outboard luffing hoist sheave nest (or wire rope pendant connections from the strut) are usually built into the outboard end of the

adjacent inner section. Individual boom sections support pivoting lighting fixtures, deflector sheaves, and rollers or rubbing blocks to preclude wire rope contact with the boom structure.

4.1.11.1 Struts. Struts (also called floating masts) are structural frames that support the outboard luffing hoist sheave nest and deflector sheaves of the hook hoist reeving systems. They pivot on hinges similar to those of the boom, and are connected to the boom by means of wire rope pendants. In operation, they control the movements of the boom. The varying geometry between the A-frame, boom, and strut on any given crane, may impose both tensile and compressive loads on the strut, as it pivots through its range of motion. Access must be provided to all sheaves.

(Struts have been incorporated in the designs of some newer portal cranes to support (and eliminate the sag of) the luffing sheaves that were removed from the boom to minimize lubrication drip on clean areas underneath the hooks. Figure 6 depicts a portal crane design with a strut.)

4.1.12 Container Crane Booms. These booms are the luffing extensions of the main beams. In their horizontal position, they function as cantilevered girders with trolley rails on their lower flanges. The boom girders are supported by stays at the outer ends and are hinged at the feet so that they can be raised to clear the ship’s superstructure during travel or for storage. The boom girders have box cross sections which are braced at their upper flanges and at the ends. The lower flanges are widened on one side to support a trolley rail. The boom girders’ cross sections are sufficiently large to permit entry into their interior and are reinforced with open diaphragms to permit full access for inspection or repair. The access hatches are normally located in the upper flanges and are reinforced around the perimeter to maintain the cross sectional properties and preclude entry of rainwater. These boom girders are one-piece weldments.

One boom girder supports a full-length walkway arranged to permit emergency egress from the cab anywhere along the walkway. The upper flange of the boom girder may serve as the walkway or a separate walkway structure may be cantilevered off the side of the boom girder.

4.1.12.1 Boom and Main Beam Stays. The booms are supported in their horizontal operating position by stays from the top of the gantry. These stays are rigid structural members, double-hinged near the center to allow them to fold when the boom is raised by the boom hoist. The main beam stays differ only in the deletion of the center hinge.

4.1.13 Container Crane Main Beams. The main beams may be considered as extensions of the (luffing) boom and are of the same cross section and construction as the boom girders. They are rigidly built into the gantry in line with the boom girders and extend backwards through the gantry as cantilevers to permit trolley travel past the land-side rail. The main beams also serve as foundations for the hoist machinery house and the diesel engine-electric generator room.

One of the main beams includes a walkway which matches the boom walkway and extends to the very end of the main beam. This walkway also must permit emergency egress from the cab at any location. The other main beam is required to have a short

walkway or platform at the back end for servicing the festoon system. The two walkways must be connected by a crossover walk.

4.1.14 Mobile Crane Fixed Length Booms. These booms are lattice type standard components of various manufacturers and may be of either tubular or open structural sections. The individual sections are all-welded and normally the grade of steel is of higher strength than on other cranes. The main chords and lacing are most often thin-wall tubular sections. Boom sections may be bolted or pinned for quick disassembly and assembly. The assembled boom lengths vary, depending on the required reach, and the crane capacity is adjusted correspondingly. The boom length is changed by addition or removal of standard boom sections.

The booms are normally raised by a boom hoist and wire ropes. Walkways or platforms are not provided because their weight detracts directly from the crane's capacity.

4.1.14.1 Flying Jibs. Boom extensions in the form of lattice type pinned flying jibs are common on mobile cranes. The installation of flying jibs includes additional standard components such as a mast and pendant cables. The common practice is to align (angle) the flying jib below the axis of the boom.

4.1.15 Mobile Crane Telescopic Booms. Telescopic booms have closed rectangular or trapezoidal cross sections. They may be standard structural tubular shapes or built-up box sections. They are extended (telescoped out) by means of internal hydraulic cylinders. Each section slides on non-metallic low-friction pads installed at the open end of the surrounding section.

The booms are normally raised by hydraulic cylinders installed between the machinery deck and reinforced connections on the boom. As in the case of fixed length booms, walkways and platforms are not provided so as not to detract from the crane's capacity.

4.1.16 A-Frames. A-frames, so called because of their profile, serve to elevate the boom luffing sheaves to a favorable position for raising the boom. The two back legs, which are subjected only to tension, are standard open or closed structural shapes. The two forward legs, which are subjected to compressive loads and bending loads from the reeving systems' sheaves mounted on them, are usually relatively heavy closed sections and are extensively braced. The A-frames also support the ladders and platforms that provide access to the sheaves and other service points.

The forward legs are connected to the machinery deck main beams or their rigid vertical extensions in the form of pedestals or structural frames; the back legs are connected at the back ends of the main beams directly above the counterweight. The connections between A-frames members and with the machinery deck may be rigid (common practice on older cranes) or pinned. Pinned connections make assembly and disassembly (which is sometimes required for repairs or access to the machinery house interior) easy to perform. It is NCC policy to require pinned connections for new cranes.

A-frames are distinct structural assemblies and do not differ between those on portal and floating cranes. On container cranes, however, the A-frames are integral vertical extensions of the gantry structure. The A-frames must

include ladders and platforms for access to the various sheaves, sheave frames, equalizer beams, and other equipment.

4.1.17 Machinery Decks. Machinery decks of portal and floating cranes are usually constructed around two longitudinal main beams, which may be large wide flange sections or built-up box girders. They are positioned in line with the boom hinges and extend aft to the end of the machinery house. A circular transition section to match the diameter of the roller path or the rotate bearing is welded to the main beams. In case of the roller path design, the center steadiment is centered between the main beams in a heavy structural frame. Normally pin housings for the A-frame connections and boom hinges are welded to the upper flanges of the main beams. Alternatively, rigid intermediate pedestals or structural frames may be bolted or welded to the main beams to support the A-frame and boom hinge pins.

The machinery deck is extended sideways with cantilevered structural supports to provide additional mounting foundations for the operator’s cab, electrical equipment, fuel tank, and other miscellaneous items. On new cranes the entire machinery deck should be a single weldment. If practical considerations preclude this, then the bolted connections should be designed to ensure an accurate fit/alignment for field assembly. Interiors of major closed sections of the structure are accessible through hatches in the floor. On the older cranes of riveted construction, most areas of the machinery deck are accessible from the open bottom of the structure.

The main beams support the hoists on their independent foundations and the counterweight. This arrangement aligns all the hoist wire ropes nearly parallel with the sheaves on the A-frame and the boom. The rotate drives should also be mounted adjacent to the main beams to take advantage of their inherent strength and rigidity. The diesel engine-generator set, depending on the machinery house space constraints, may also be mounted on the main beams, but the newer cranes locate it on the side support on the opposite side from the operator’s cab. On cranes with rotate bearings, the main beams should include reinforced jacking points for raising the crane upperworks to permit rotate bearing replacement.

4.1.18 Portal Bases. Portal bases (gantries) of the older cranes are four-legged structures constructed from plates and standard structural sections with riveted or bolted joints. These structures are susceptible to corrosion at the joints and on exposed but inaccessible surfaces. They are slightly flexible, and this characteristic allows them to deflect sufficiently to keep all the travel wheels in full contact with uneven rails. The upper section (gantry cap) includes a near circular (usually octagonal) girder arrangement to support the roller path. The roller path is usually 26 to 30 feet in diameter, regardless of the rail gauge. The legs are connected by heavy sill beams at their lower ends.

On newer cranes with rotate bearings, the portal bases are one-piece weldments or bolted assemblies of several major weldments. The weldments are closed sections made up of flat plates and present a smooth, low maintenance exterior. All structural reinforcements, normally in the form of open diaphragms, are confined to the interior. All interior sections which are large enough for entry (approximately 2-foot by 3-foot cross section) are accessible for inspection and repair; smaller sections are seal welded. The circular column, of approximately the same diameter as the rotate bearing, is installed on top of the

gantry cap. The column may have the access ladders either on the inside or the outside. The lower portion of the gantry is in the form of two tapered boxes flaring out from the gantry cap and with their longitudinal axes positioned in line with the rails. The box section construction makes these portal bases rigid and provisions must be made in the travel truck system to maintain wheel contact on uneven rails. When required for crane stability, ballast in the form of concrete or steel may be placed near the bottom of the portal base structure.

The width of the portal base opening is made as wide as the rail gauge permits, and the height is not less than 22 feet. Portal cranes are required to traverse sharp curves, which impose large spreading or squeezing side loads and bending moments on the portal base. The older cranes with open riveted or bolted construction require extensive leg-to-gantry cap reinforcement to withstand the bending moments.

4.1.19 Gantries and Semi-Gantries. Gantries and semi-gantries of cranes with overrunning trolleys, depending on the size and vintage, may be constructed of open structural sections or box section weldments bolted together. The smaller and older gantries are likely to be of the open structural section design; the larger and newer, of the box section design. Gantries of container cranes are assembled from large box-section weldments, which have accessible interiors with built-in ladders and platforms for inspection and repairs.

4.1.20 Floating Crane Tub Structures. The upper portions of the tubs are similar to those of portal crane bases. They normally protrude 7 to 8 feet above the barge deck to provide walking clearance and access to the roller path assembly or the rotate bearing. The tubs are built into the barge structure with extensive gusseting to distribute the loads uniformly into the barge structure.

4.1.21 Portal Base, Gantry, and Tub Penetrations. Openings, such as doors and hatches, in these structures must be reinforced around their perimeter with reinforcing rings (collars), structural frames, or doublers to maintain the section modulus (and strength) of the cross section. Any door or hatch into a closed space must include positive means of opening from either side. All exterior openings in horizontal surfaces must have coaming or raised structural reinforcement to prevent entry of rainwater into the structure interior.

4.1.22 Machinery Houses and Outdoor Operator’s Cabs. These structures are designed with sheet metal panels over a structural frame. Glazing is provided as appropriate for entry of natural light and operator visibility. Localized structural reinforcements are added as required for specific purposes; such as walkways, electrical resistor enclosures, diesel engine exhaust system, window cleaning platforms, etc. Machinery house walls of older cranes may incorporate “soft patches” – sections which can be easily cut out for equipment replacement and then reinstalled. Machinery house roofs may have access hatches above items of equipment, which are expected to require periodic maintenance in the shop. Machinery house roofs also require slots for the routing of hoists' wire ropes to the A-frame. All roof openings are provided with coaming to minimize the entry of rainwater. Additionally, wire rope slots are covered with rubber flaps, which are pried open by the wire ropes as they move across them.

Operator's cabs of portal cranes are normally located on the forward extension of the machinery deck or on the machinery house roof. On floating cranes, a common practice is to locate the operator's cab on, or even above, the machinery house roof. On container cranes, the operator's cab is always attached to the trolley to give the operator a clear view for accurate spotting of the spreader and containers.

4.1.22.1 Open Cabs (for Indoor Cranes). Indoor OET and traveling jib (wall) cranes may be provided with open operator's cabs. These cabs must provide adequate visibility and physical safety for the operator.

4.1.23 Drive Foundations. Hoist drives, rotate drives, and travel drives of portal, floating, and container cranes are mounted on independent structural foundations to permit accurate shop alignment and fit-up of their mechanical components before installation on the cranes. The foundations are required to be rigid one-piece weldments designed to isolate the drive assembly from any deflections of the main support structures and to maintain alignment of the components. The foundations are shimmed and bolted to the support structures with high strength structural bolts. Travel drives, which are shaft (wheel axle) mounted, may only be pinned to the travel truck support structure.

4.1.23.1 Diesel Engine-Electric Generator Set Foundations. These sets are normally obtained from commercial firms specializing in assembling such equipment. Unlike the drive foundations, these are mounted on vibration isolators/snubbers to prevent harmful resonance with the crane structure.

4.1.24 Counterweight. The counterweight is installed at the extreme rear end of the rotating machinery deck to counteract the forward moment of the boom suspended hook load. On older cranes it is in the form of a steel box filled with concrete. Homogeneous scrap metal, often in the form of punchings from machine shop operations, may be included in the concrete aggregate for increased density. The counterweight is a permanent installation – it cannot be removed nor easily altered.

On newer cranes, the counterweight is in the form of several steel plates or castings. The individual sections are suspended beneath the main beams of the machinery deck with provisions for easy removal or replacement.

4.1.25 Ballast. Ballast is material which is emplaced in the portal base, gantry, or barge to increase the weight of the main portion of the crane and thereby reduces the movement of the center of gravity of the entire crane due to the various loading conditions. It is always required on floating cranes and sometimes on portal, gantry, and container cranes that operate on relatively narrow rail gauges. It is normally in the form of concrete or steel slabs, installed in the lower portion of the structure.

4.1.26 Ladders, Walkways, Platforms, and Stairs. All inspection and maintenance points must have a safe means of access. Cab operated cranes require safe access from ground level to the cab. All booms and A-frames must include walkways and other access provisions to all sheaves, bearings, lighting fixtures, and limit switches. Portal cranes must be provided with circular walkway around the roller path or rotate bearing. Major closed-section structural components, sufficiently large for interior access, must include internal ladders and platforms.

Particular care is required in the arrangement of the transit point between rotating and stationary structures to preclude any possibility of injuring of maintenance personnel. In general, design details of the ladders, walkways, platforms are governed by OSHA 29 CFR 1910 criteria.

4.1.27 Structural Pins. Structural pins are defined as those in connections/joints where no motion is intended to take place on their surface during normal crane operation. Examples of such pins are A-frame connections between its members and the machinery deck, and container crane main beam (but not boom) stay-to-gantry connections. (Container crane boom stay hinge pins and gantry connections, which are stationary during normal crane operation, but are subjected to a substantial arc of rotation whenever the boom is elevated, are seated in lubricated bushings and are considered to be mechanical components.)

All structural pins should be solid forgings; hollow pins (heavy wall tubes) may be used only with NCC approval. Pinned joints must be designed to put the pin into double shear. These pinned joints do not require provisions for lubrication.

The pins are normally installed directly into the bored holes (without bushings) of the connected components and are retained on one end or both ends. The smaller pins are usually machined with a head (shoulder) on one end and a straight slot or circumferential groove, for a keeper bar, on the other end. The larger pins are usually straight, with chamfered ends, and a keeper bar slot on one or both ends. If only one end is retained with the keeper bar, then the pin length should be sufficient to allow the straight section (excluding the chamfer) of the free end to protrude beyond the face of the structure by at least 1/8 of the bore diameter. Large pins may have a tapped hole on one or both ends for temporary installation of an eye-bolt for handling and extraction of the pin. Welded bars on the end of pins, intended to function as both head and keeper bar, are prohibited because of the tendency of the weld to crack.

4.1.28 Maintenance Support Items. Two of the most common items for maintenance support of portal cranes are the boom stand and the upperworks lifting fixture.

The boom stand is a simple portable structure, usually a tubular section with a wide base and an upper bracket to match the boom lower main chords. The height is selected to support the boom in a horizontal position. The boom stand is equipped with lifting eyes. Normally no provisions for accessibility from ground level are provided.

Floating cranes always include a boom rest as an integral component of the deck structure. The boom rest is a more elaborate structure than the portable boom stand – often incorporating within its structure a pilothouse and some crew accommodations.

Portal and floating cranes which utilize a rotate bearing may be provided with a specially designed lifting fixture for “undecking” – either for assembly/disassembly or for bearing replacement. The lifting fixtures are designed to maintain the lifted upperworks in a horizontal position, and include a hook eye at the top and pendants for connection to the upperworks. The lifting fixture is most useful when the original upperworks design includes the lifting connections. Depending on the weight of the upperworks, the boom and counterweight may have to be removed prior to undecking the crane by means of the lifting fixture.

4.1.29 Painting and Corrosion Protection. Steel surfaces exposed to the atmosphere, whether indoors or outdoors, require painting for protection against corrosion. (Interior surfaces of sealed spaces/voids may be left unpainted.) All paint systems fail eventually due to the “weathering” effects of the atmosphere. Premature failures, however, are caused by the loss of adhesion or damage to the paint film by rusting of the steel surface underneath. Crane paint systems are comprised of several coatings of primers and topcoats. To obtain the full life of any paint system, the steel surface must be properly prepared and the primers should contain zinc (in the form of dust of organic or inorganic zinc compounds) for rust inhibition by the galvanic process. There are several levels of surface preparation (blast cleaning) and a wide variety of acceptable paint systems available for use on cranes. The topcoats, normally epoxies or vinyls, serve to reduce the demand on the zinc to retard the primer coating breakdown.

Major Navy activities have their own preferred paint systems, which should be followed if their performance has been satisfactory. Other activities should consult with NCC for the level of surface preparation and selection of the paint system. The paragraphs that follow provide background information and identify the important points that should be considered. The selections should be made on the basis of comparison of coatings’ properties with the crane operating environment. The colors and color schemes are normally chosen by the crane owning organizations.

Bolts, nuts, and washers in exterior structural connections should be cleaned, primed, and top coated after installation. The primer used should be compatible with the surface preparation.

4.1.29.1 Surface Preparation. Steel Structures Painting Council has developed a series of standards for preparation of structural steel surfaces for proper paint adhesion in the expected service environment. The description of these standards, both verbal and as photographic representations, and the process of achieving them are detailed in ANSI A159.1. Those applicable to cranes include:

SSPC-SP-5;	White Metal Blast Cleaning
SSPC-SP-6;	Commercial Blast Cleaning
SSPC-SP-7;	Brush-Off Blast Cleaning
SSPC-SP-10;	Near-White Blast Cleaning

(Weld spatter is to be removed by hand or power tools prior to blast cleaning.)

a) Brush-Off Blast Cleaning is adequate for the preparation of faying surfaces of structural connections which are only primed prior to bolting.

b) Commercial Blast Cleaning is relatively inexpensive and provides satisfactory surface preparation for many service conditions. Small areas of tightly adhering mill scale may remain.

c) Near-White Blast Cleaning removes practically all rust, mill scale, and other detrimental matter from the surface. This level of surface preparation is satisfactory for all but the most severe service conditions.

d) White Metal Blast Cleaning removes all traces of rust, mill scale, and all other detrimental matter and defects from the surface. This standard is the most expensive and is justified only for the most corrosive atmosphere or when special precautions are required to ensure positive paint adhesion.

Completed structural components and weldments blast cleaned to commercial, near-white, or white metal standards, should be primed in the shop. Those that require field welding must have their welded areas blast cleaned during the erection. In either case, these blast cleaned areas must be primed before any rusting can occur. The normal practice is to blast clean only as much surface as can be primed the same day.

4.1.29.2 Paints and Application. The common paint system for crane structures are one or two coats of primer and two or three coats of topcoat. Normal dry film thickness of each coat is 2 to 5 mils. The dry film thickness of a primer coat intended to protect a freshly blast cleaned surface against rusting is usually less than 2 mils. Primers on faying surfaces of structural bolted connections must meet the requirements of the Manual of Steel Construction (Specification for Structural Joints Using ASTM A325 or A490 Bolts). Such paint protection is appropriate for all service environments, but are intended mainly for use in conditions of high humidity or marine atmosphere.

Primers with inorganic zinc offer excellent resistance to weathering and abrasion; primers with organic zinc are tolerant of variations in surface preparation quality, have better compatibility with topcoats, and are more flexible than the inorganic types. To avoid any doubts about the quality of bonding between them, the primers and topcoats should be the products of the same manufacturer. Furthermore, the manufacturer’s application (and curing) instructions should be followed to obtain the expected performance and service life of the paint system. (In some paint systems tie coats may be required between zinc-rich primers and certain special topcoats.) Many zinc-rich primer formulations exhibit high reactivity initially, but develop a layer of zinc corrosion products that retards further zinc sacrifice until damage to the coating exposes the surface. However, the greater the galvanic demand on the zinc, the faster the primer coating breaks down, unless protected by the zinc corrosion products or by the topcoats. Water ballast tanks of floating crane barges require special paints formulated for that purpose, which may be inorganic zinc, urethane, epoxy, or coat tar epoxy. The acceptability of these paints for the intended service must be demonstrated by their manufacturers’ laboratory testing.

Primers and topcoats are best applied by spraying, but brushing-on may be preferred for smaller areas, touch-ups, and to force them into surface irregularities.

4.1.29.3 Cathodic Protection. The immersed portions of floating crane barges require cathodic protection to retard corrosion. A cathodic protection system, with an automatic impressed current, is used for this purpose. It consists of platinum-tantalum anodes and silver/silver chloride reference cells, permanently installed on the barge exterior at least 5-feet below the waterline (lightship condition), and a saturable reactor power supply with an automatic controller. The system must have sufficient capacity to supply a minimum current density of 2 milliamperes per square foot to the immersed barge area. The minimum distance between any anode and reference cell should be 40 feet.

4.2 Structural-Mechanical. These components include structural members which pivot, rotate, or slide with respect to each other; and mechanical assemblies that function as joints between structural members where relative movement is intended. The structural members are designed according to structural criteria; the joints between them are designed to comply with the applicable mechanical criteria or other unique requirements. The rotate (turntable) bearings are standard commercial products; all other structural-mechanical components are custom designed.

4.2.1 Equalizer Bars. Reeving system equalizer bars, used to equalize the wire rope pulls of double reeved systems, are short plates or weldments with a pivot pin in the center and wire rope fitting pin connections at the ends. Except for standard commercial cranes, the pivot pin bore requires a bronze bushing with flanges or thrust washers. The pins and the bronze bushings are sized per the mechanical design criteria. The bronze bushings include provisions for grease lubrication of the bore, normally through drilled passages in the pin. On smaller pins, oil impregnated sintered bushings may be used and grease lubrication omitted. Pin seats in the support structure, where there is no relative motion between the surfaces in contact, are not lubricated and the structural criteria applies.

The equalizer bars may be installed directly into the adjacent support structure (usually the trolley) or a pivoting frame on the boom, A-frame, or trolley. NCC approval is required for installation of an equalizer bar in the hook block.

4.2.2 Sheave and Equalizer Bar Frames. Frames that function as pivoting sheave nests or equalizer bar frames are designed according to the structural requirements. As in the case of equalizer bars, all their pivot joints are sized per the mechanical design criteria with provisions for grease lubrication through drilled passages in the pin. Equalizer frames are normally installed on booms, A-frames, or trolley structures.

4.2.3 Boom Hinges. Boom hinge pins are designed according to the structural design criteria. Normally hinge assemblies utilize bronze bushings with grease lubrication. Alternatively, commercial bearings, specifically designed for such applications, may be used in place of the bushings. The bushings or the bearings may be installed either in the boom or the base supports. Lubrication passages must be arranged to deliver injected grease to the proper locations with the boom at any angle, and to ensure this, the pins may have to be locked against rotation with respect to the boom or the base supports.

4.2.4 Fleeting Sheave Pins. These are long stationary pins mounted in the legs of the A-frame. They support sheaves which rotate and slide on bronze bushings along the pin. The sliding forces are due to wire rope lateral movement caused by the characteristics of the reeving system. The ends of the pins are considered as structural connections; the pins themselves must be designed to unique criteria to limit deflections and ensure smooth sliding of the sheaves. The pins must be plated with nickel and hard chrome, or be of stainless steel. Since the sheave slides along the pin, grease lubrication is provided through passages in the sheave hub and bushings.

4.2.5 Center Steadiments. These assemblies, commonly used on the older portal and floating cranes, are comprised of an upper and lower tubular section (usually

castings) which are rigidly built into the full depth of the machinery deck and the gantry cap. The two facing ends which overlap and turn on each other, are separated by a bronze bushing. The bushing and each center steadiment section are sized for radial loads due to rotate drive gear forces, wind, list/trim, and acceleration. The bushing fit maintains the concentric alignment between the roller path rails. The bushing requires grease or oil lubrication. Figure 15 shows a cross section of a typical arrangement.

The relative tilting between the crane upperworks and the portal base cap or barge tub may impose severe bending moments on the center steadiment sections. The overall design of the assembly should minimize this condition. An effective means of avoiding such bending moments is to mount one of the steadiment sections on a trunnion with its axis parallel with the boom hinges. (Trunnion ends in the base plates do not require bushings or lubrication.) There is no restriction of the axial movement at the bushing; during normal operation the separation of the two steadiment sections is prevented only by the inherent balance of the upperworks on the roller path (with no contact with the locking nut),and in case of unanticipated excessive overturning movement, by the king pin and its locking nut.

The steadiment sections, trunnion, and trunnion base plates are designed according to the structural criteria; the bushings according to the mechanical criteria.

4.2.5.1 King Pins. King pins are installed through the open center of the steadiment sections as an integral part of the assembly. The king pins are heavy-walled tubes, with a nut or a shoulder at the top and a locking nut at the bottom. The shoulder and nut clamping faces have thrust washers installed between them and the ends of the steadiment sections. The hollow king pin is used to route the electrical conductors between the machinery deck and the portal base or barge. In normal operation, the clamping faces are not subjected to any axial (separating) forces from the steadiment sections, and some clearance is maintained between them. However, the clamping capacity of the king pin is designed to withstand a theoretical separating (lift-off) force due to 150 percent of rated capacity. Mechanical design criteria apply only to the bushings and thrust washers.

4.2.6 Roller Paths. Roller path assemblies include the upper and lower rail circles, bull gear, rollers, and the roller cage. The rail circles may be in the form of standard rails bent to the desired curvature or a number of cast segments with a machined running surface for the rollers. The lower rail circle is always a full 360-degree circle; the upper circle may be full or just two circle quadrants – one under the front (boom end) and the other under the back (counterweight end) of the machinery deck. The rail circles are separated by a full complement of rollers, mounted on fixed axles in a circular roller cage, which carry all vertical compressive loads.

All rollers rotate on grease lubricated bushings. The roller cage serves to keep the rollers in proper alignment, but is free to follow their movement around the rail circle. The standard diameter of a portal or floating crane roller circle is 26 to 30 feet.

The bull gear may be inside or outside the lower rail circle and the gear teeth may be external or internal. The space between the bull gear and the rail circle is drained at many locations to avoid accumulation of water. Roller path

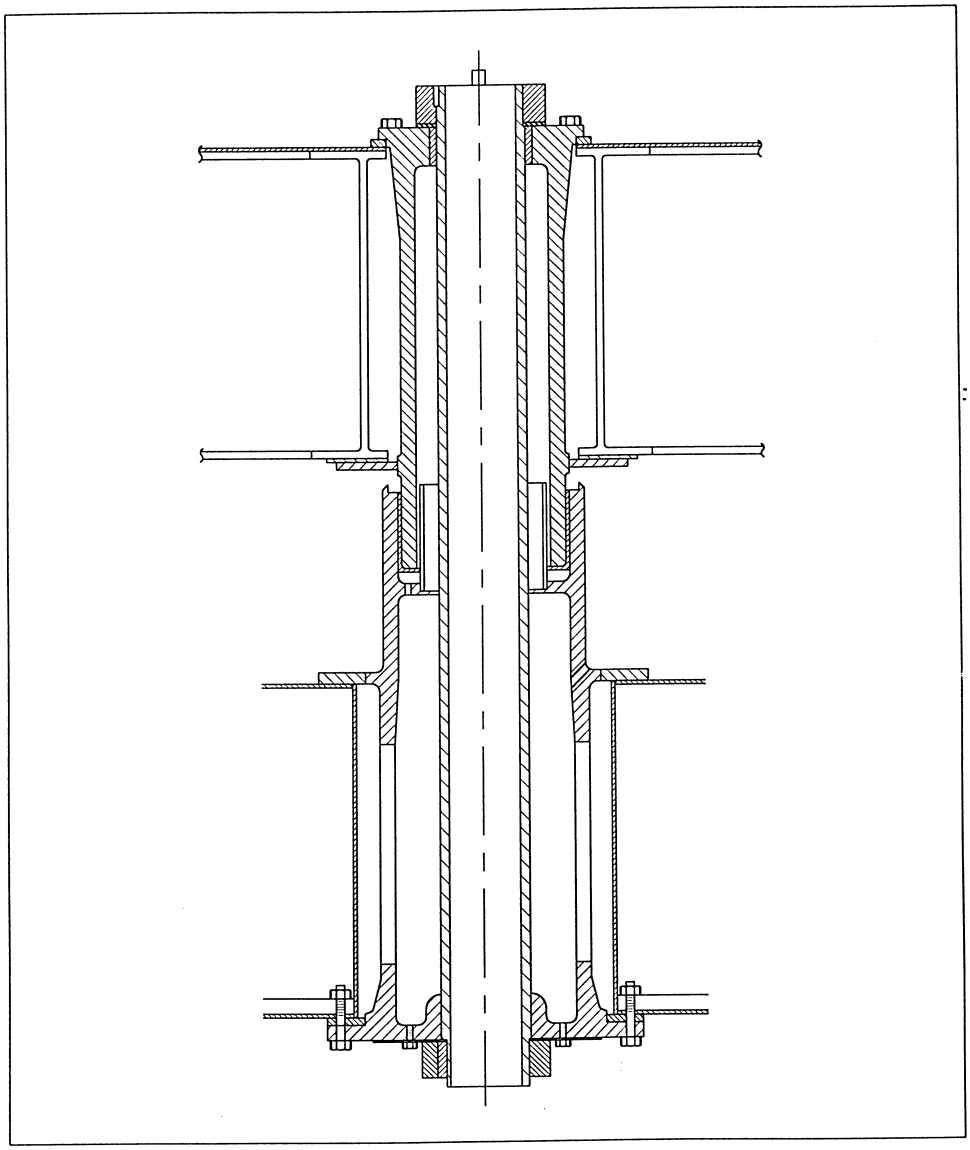

FIGURE 15
CENTER STEADIMENT

assemblies and all their components are designed in accordance with the mechanical design criteria and other unique criteria as they apply.

4.2.6.1 Bent Rail Roller Paths. The bent rail segments are spliced at the webs with two or three bolts per side and have their bottom flanges secured to the support structure either with standard rail clips or with through bolts. The rail flanges must be held tightly against the support structure because they have a tendency to warp out of the horizontal plane. The bull gear is a separate assembly of cast segments with machined gear teeth or plate steel segments with flame cut gear teeth. The bull gear segments are accurately arranged in a circle centered on the center steadiment. The roller cage is completely freely-rotating, without any provisions for centering on the center steadiment. The rollers have straight cylindrical treads and are double-flanged. If the upper rail path is a full circle, a short, easily removable rail section must be included in the lower rail circle for the extraction of individual rollers.

4.2.6.2 Cast Rail Roller Paths. With cast rail roller paths, the bull gear may be separate or integral with the rail segments. The gear teeth and the running surfaces are machined. The running surfaces may be machined flat (for straight cylindrical, double-flanged rollers) or conical (for tapered, flangeless rollers). The corners of the flat surfaced segments are chamfered and the sides are machined to match the profile of the double-flanged rollers. As in the case of bent rail roller paths, the rollers are mounted in a completely free-floating roller cage. Segments with conical surfaces need to be machined only on top, but the cone angle must match exactly the taper of the rollers. The angles of the conical running surfaces are selected to eliminate any slippage along the roller-roller path line of contact.

The conical running surfaces impose an outward radical force on the rollers, which is taken up by a spider assembly of radial spokes inside the roller cage. The inner ends of the spokes are secured to a hub, which is centered by, and rotates on, either section of the center steadiment. The spokes and the roller cage are designed to permit accurate adjustment of axial position (for load sharing) of individual rollers within their pockets. The hub has a bushing with provisions for grease lubrication.

4.2.6.3 Rollers. Rollers are sized for the maximum load that may be applied to any roller within the rated operating range of the crane. The maximum roller load is calculated by the method described in paragraph 5.2.6.1. The diameters of rollers with straight cylindrical treads must be uniform within close tolerances to ensure proper load sharing among the rollers. The tapered rollers must be machined with tight tolerances on the taper to ensure full contact with the roller path running surfaces, and other tolerances adequate to provide the required adjustment range in the roller cage pockets. Tapered rollers must be equipped with thrust washers designed to carry the outward radial force imposed on them. All rollers are required to turn on grease lubricated bushings, and tapered roller thrust washers are required to have independent grease lubrication.

4.2.6.4 Roller Path Mounting. The mounting surfaces for the lower rail circle and the front and back quadrants of the upper rail circles require uniform, rigid structural support. The interface with the rail segment webs must accommodate closely spaced, tack welded shims for accurate alignment of the running surfaces. Alternatively, rail segment webs may be set in a poured bed of epoxy resin compound formulated for such applications. All details of the compound

manufacturer's recommendations must be followed. The final installation, including tensioning of the mounting bolts, is required to provide an accurate assembly, permanently secured against all vertical, radial, and tangential design loads.

4.2.7 Rotate Bearings. Rotate bearings are precision assemblies of rings (races), rolling elements (balls or rollers), and separators. There are several standard designs available - one-row or two-row ball, crossed roller, three-row roller, and a variety of raceway profiles. The mounting provisions include through bolts or studs, tapped holes for threaded fasteners, or weld bands. (The weld bands are welded to the bearing races by the bearing manufacturer, and to the crane structure by the crane manufacturer.) The three-row roller rotate bearing design is the most robust, and NCC policy is to specify it for all new cranes. The three-row roller bearing uses three sets of independent cylindrical rollers, each sized for the particular load that is to be imposed on it – downward, upward (due to the overturning moment), and radial. In the three-row bearing design, shown in Figure 16, one of the rings is split into two circular sections so that it can be assembled over the rollers and the other, one-piece ring. The two sections are held in place with assembly screws, whose contribution to the load carrying capacity is insignificant, and may be removed or left in place after the bearing is mounted. The split ring must be mounted using through bolts or studs; the one-piece ring may use tapped holes for mounting, but through bolts or studs are preferred. In crane applications, a ring gear is required for rotating the upperworks. As depicted in Figure 16, the one-piece inner ring, with gear teeth machined on its inside diameter, functions as the gear ring. The lower section of the two-piece ring incorporates a back-up restraining feature against bearing separation in the form of an extended flange that overlaps the shoulder of the gear ring below its lower raceway.

4.2.7.1 Rotate Bearing Mounting. Being precision assemblies, the mounting details of rotate bearings are of critical importance. The rings must be mounted on accurately machined surfaces supported by substantial circular webs aligned as closely as practical with the upper and lower rollers. The complete bearing support structure, both upper and lower, must be rigid and of uniform stiffness. The lower support structure is normally a circular column rising from the portal base or barge. The machining tolerances of the mounting surfaces – circumferential waviness and radial tilt – must be within the limits prescribed by the bearing manufacturer. (Shimming or grouting of the mounting surfaces is prohibited.) The surface finish roughness height ratings should be between 125 and 250 micro-inches.

Rotate bearings have a slender cross section compared to their diameter. Consequently, the rings invariably are slightly oval, or out-of-round. The bearing manufacturers customarily mark the location of the long axis on each ring. In mounting and permanently securing the rings to their support structures, it is imperative to take steps to minimize this inherent ovality. Otherwise, the mismatch between the long axis of one ring with respect to the short axis of the other ring may cause excessive tightness at some locations during rotation. Each ring is also marked with the location of the hardness gap (soft spot) of its raceway surface. The mounting procedure requires that the rings be oriented with respect to each other such that the long axis of one is aligned with the short axis of the other ring. Then, the lower ring is positioned with its hardness gap (soft spot) in the location that is expected to be subjected to the lowest loads, and the upper ring with the soft spot 90 degrees from the boom-counterweight axis.

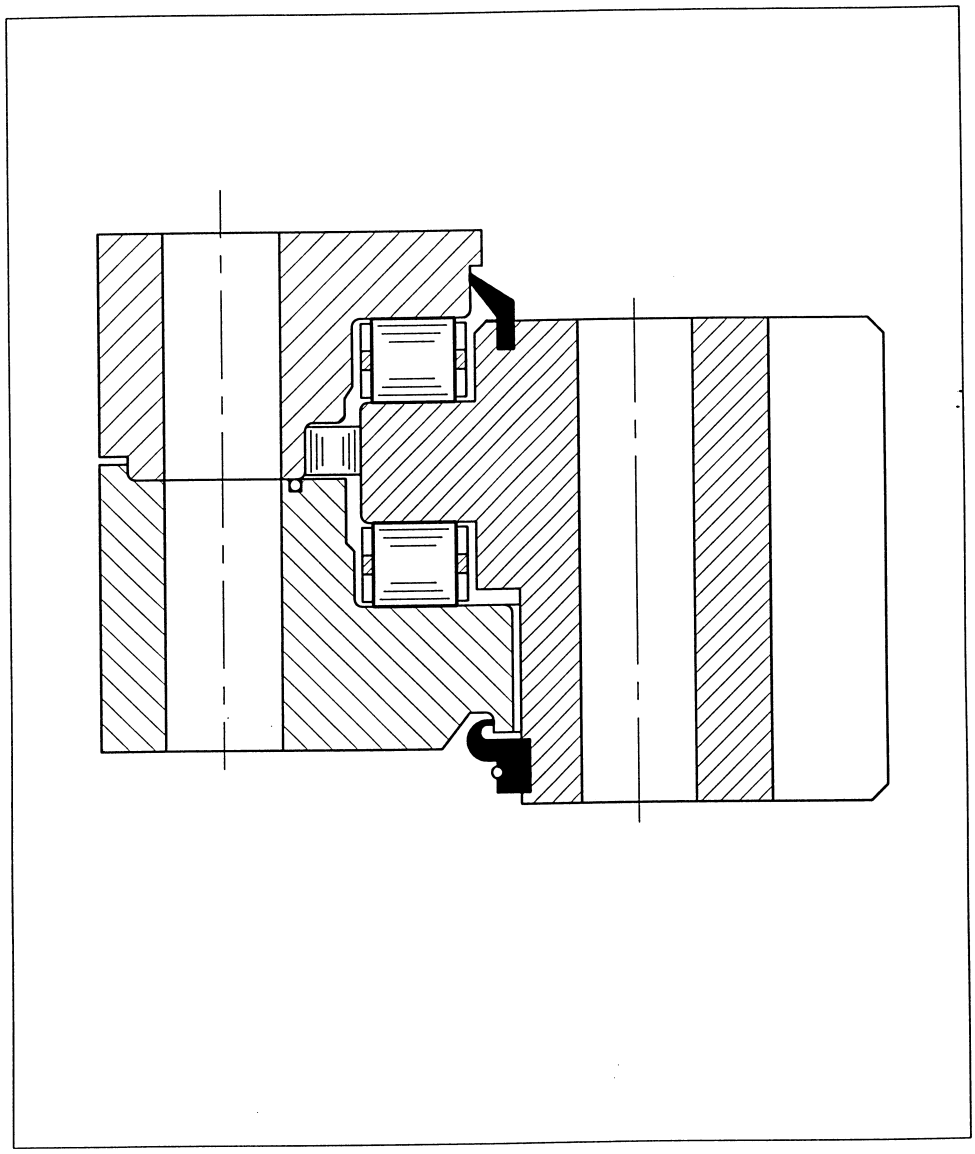

FIGURE 16
THREE-ROW ROTATE BEARING

After completion of these alignments, the rotate bearing rings are secured by means of their fasteners, tensioned to the prescribed values and sequence. The mounting fasteners of the outer ring, as shown in Figure 16, also serve to clamp together the two sections of the ring. (The use of machined pilot shoulders or seats for obtaining ring circularity is not recommended.) The design of the support structure must provide the space and clearances required for the employment of fastener tensioning equipment.

Rotate bearing assemblies include a lip seal between the bearing rings, which seals out external contamination and retains the grease lubricant. This feature and the choice of internal gear teeth on a bearing ring place the entire rotate bearing and its drive inside the clean interior of the crane structure. The entire internal diameter is open; there is no center steadiment. The opening is sufficiently large to accommodate an access ladder from the portal base or barge tub. Access to the rotate bearing is provided by circular platforms on the support column, one outside and one inside.

4.2.8 Travel Truck Equalizers. The function of the equalizers is to distribute the corner loads of OET, portal, or container cranes equally among the travel wheels. These components are box beams with pivot points in the middle and at each end. On cranes that travel on straight rails, all pivot points mate with horizontal rocker pins. On cranes that travel on rails with curves, the pivot point may mate with horizontal or vertical pins of gudgeon assemblies. (Gudgeons assemblies are intermediate members between different levels of equalizers or between equalizers and travel trucks to allow them to swivel and follow the curvature of the rails.)

Pivot points are heavy-walled structural steel tubes, blocks, or castings welded into the structure of the equalizer. Their bores and faces are machined to receive pressed-in bushings or for direct contact with pins, bearings, or thrust washers. Bushings are required for the gudgeons and are recommended for the gudgeon pins.

Normally there are two levels of equalizers. Depending on the number of wheels per corner, they may be symmetrical (end pivot points equidistant from the middle pivot point) or non-symmetrical (one end pivot point twice as distant as the other pivot point). The equalizer box beams are completely sealed weldments. Equalizers have built-in jacking points to support the crane when travel trucks are removed.

4.2.9 Gudgeon Assemblies. Gudgeon assemblies are installed between the portal base, equalizers, and travel trucks to allow them to pivot about the horizontal axes to compensate for rail unevenness and to swivel about the vertical axes to steer on rail curves. (The vertical stem is the “gudgeon”; the horizontal pin is the “gudgeon pin”.) The gudgeon assembly configuration may be in the form of an inverted “T” or a saddle with the vertical stem on top.

The gudgeon pin of the inverted “T” type, shown in Figure 17, has a loose fit with the gudgeon and is locked to the webs of the equalizer. The gudgeon penetrates the top flange of the equalizer through an opening that allows for unrestricted rocking motion. The saddle type, shown in Figure 18, does not penetrate the equalizer flange; instead, its side members extend down the sides of the equalizer. The ends of the gudgeon pin are locked to the saddle side members. The rocker motion takes place at the loose fit of the gudgeon pin and equalizer.

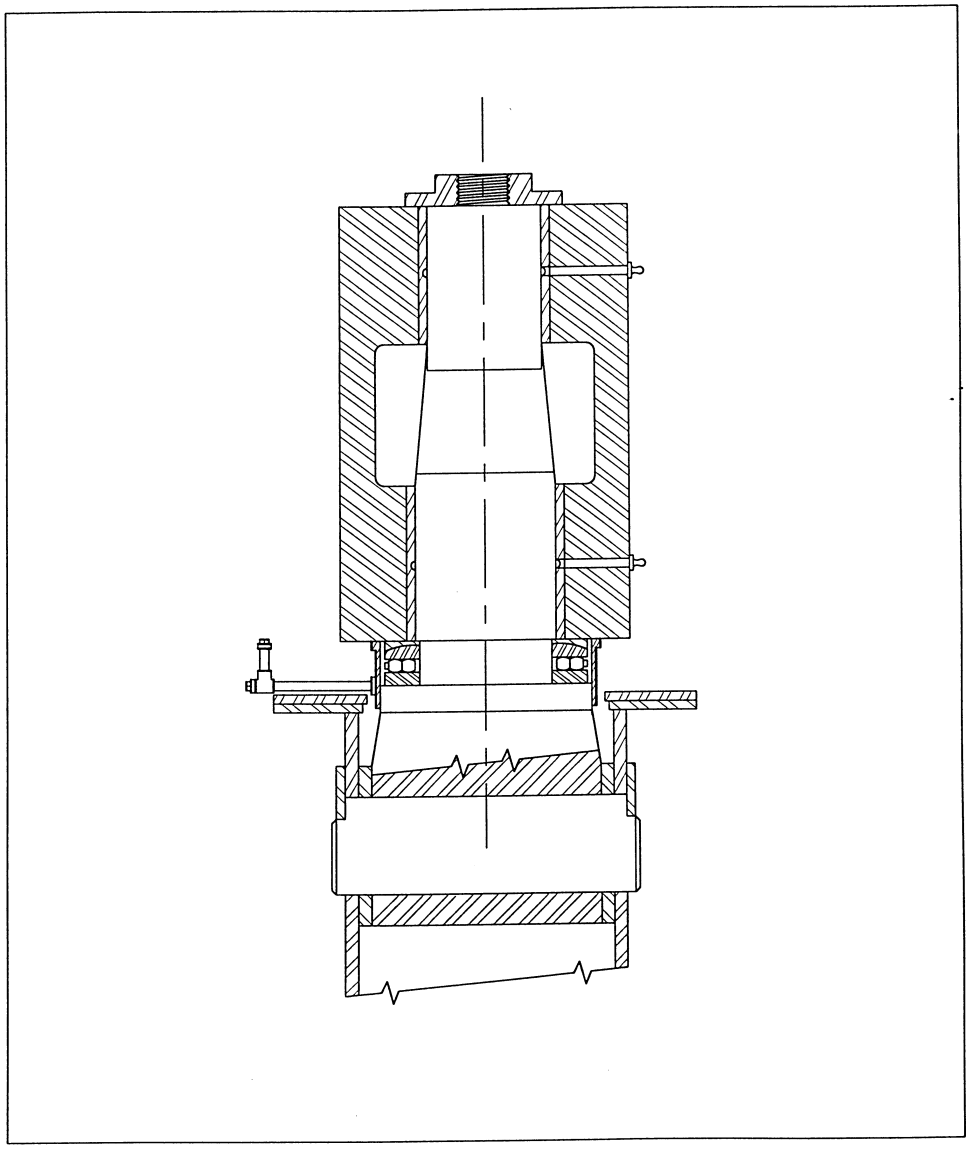

FIGURE 17
GUDGEON ASSEMBLY (INVERTED T TYPE)

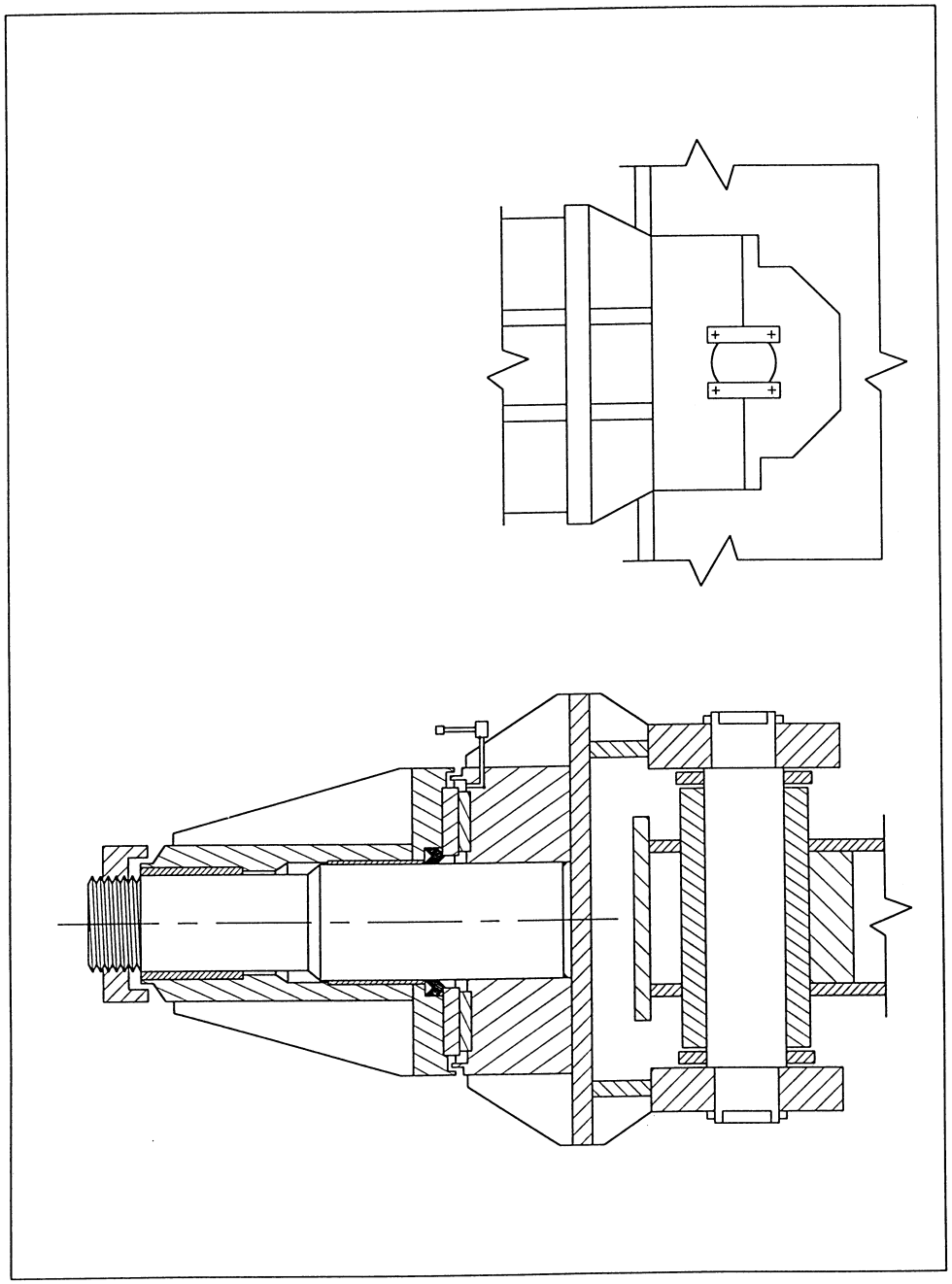

FIGURE 18
GUDGEON ASSEMBLY (SADDLE TYPE)

The saddle types of gudgeon assemblies are preferred because they preserve the structural integrity of the equalizer and shield the joint against the weather. The lateral movement between the gudgeon assembly and the equalizer is controlled by the insertion of thrust washers between these components. Gudgeon pins do not require bushings but they must be grease lubricated at the contact surfaces where the rocker motion takes place.

The gudgeons seat in pockets at the ends of the mating equalizers. The vertical loads are supported by thrust bearings or thrust washers; the bending moments are distributed into bronze bushings installed inside the top and bottom flanges of the equalizers. Portal base construction of the older cranes has inherent flexibility that allows them to deform sufficiently to maintain wheel contact on rails with some unevenness. The all-welded portal base construction of the newer cranes, however, is too rigid to compensate for rail irregularities. Consequently, their gudgeons in the upper level of equalizers must be free to slide (drop down) in their bushings to allow the wheels of an unloaded corner to maintain contact with the rails. When thrust bearings are used, the bearing installation must include provisions to maintain the races and the rolling elements in contact during lift-off conditions.

4.2.9.1 Float Pins. The gudgeon pins of the travel trucks that operate on curved tracks, in addition to accommodating rocker motion, must also provide for the lateral sliding (float) of the travel truck. The required amount of float is a function of the rail gauge, rail radius of curvature, and the portal base proportions; it must be calculated for each specific installation. Transition between travel on curves and straight track changes the effective rail gauge and causes the travel trucks to float and impose lateral squeezing or spreading forces on the portal base and torsion on the equalizers. The magnitude of these forces is the product of the wheel loads and the friction between the float pins and their bushings. Figure 19 shows a typical design used on older cranes, and Figures 20 and 21 show those preferred on newer cranes.

The sizing, material properties, and lubrication provisions for these components are prescribed in detail in Section 5.2. Use these design requirements to avoid binding at the float pin and the resulting heavy rail head/wheel flange wear and cracked welds in the portal base.

Other float pin and gudgeon assembly configurations and materials may be considered only in consultation with, and approval of, NCC.

4.2.9.2 Rocker Pins. Cranes that travel on straight tracks do not require gudgeons. The rocker motion is provided in the form of rocker pins and reinforced extensions of the webs or saddles, either upward or downward, at the pivot points.

4.2.10 Travel Trucks. Travel trucks are short box beam weldments that provide mounting for the travel wheels, travel drive, and a rocker or float pin. The four outermost travel trucks also have rail sweeps or bumpers on their outer faces. Wheel axle bearing seats are designed so that wheel/axle bearing assembly can be removed with no more that 3 inches of jacking.

The older cranes have a combination of powered and unpowered travel trucks in each corner complement. The powered trucks have both travel wheels driven through an idler gear that mates with the wheel gears. These powered trucks normally include other open gears mounted between the webs. The unpowered trucks have only two free-wheeling travel wheels.

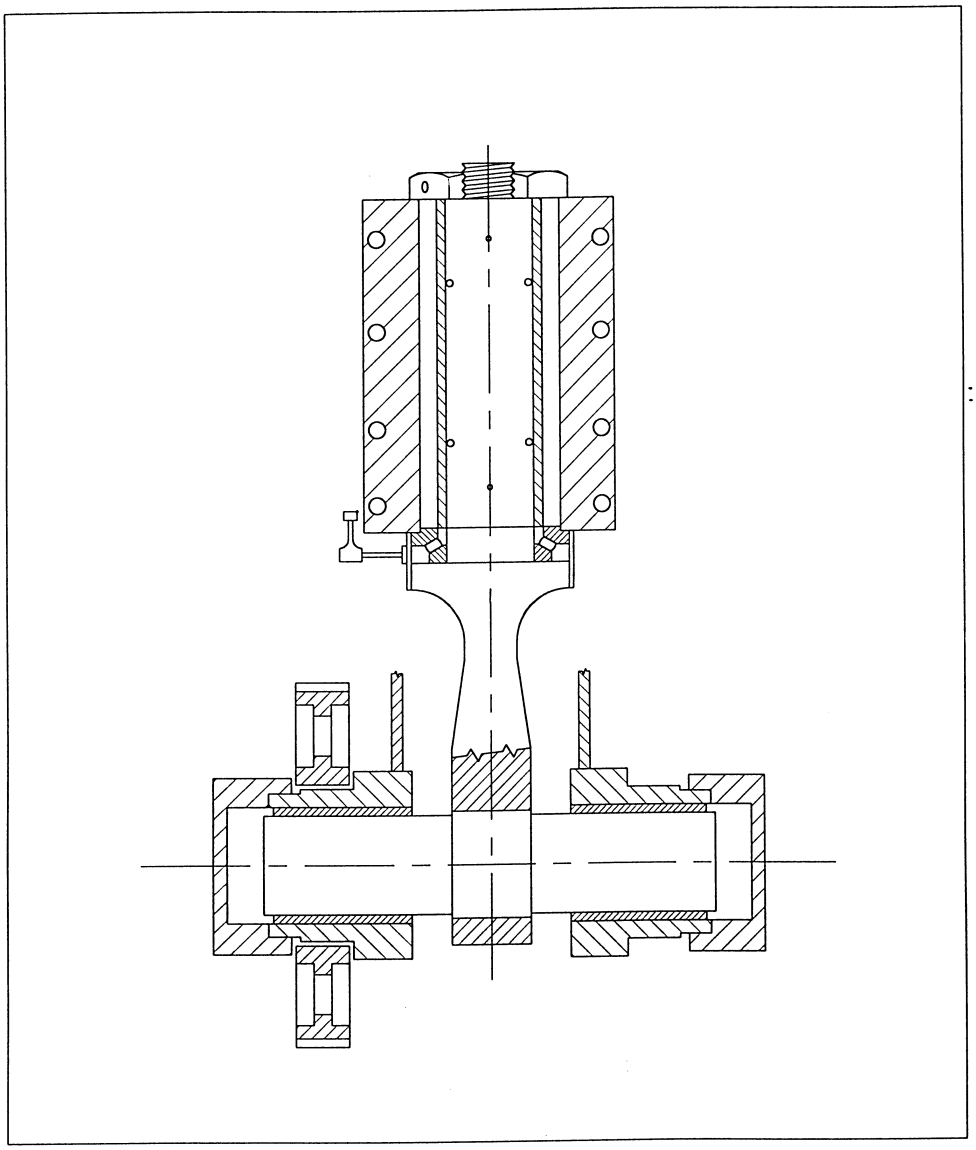

FIGURE 19
FLOAT PIN

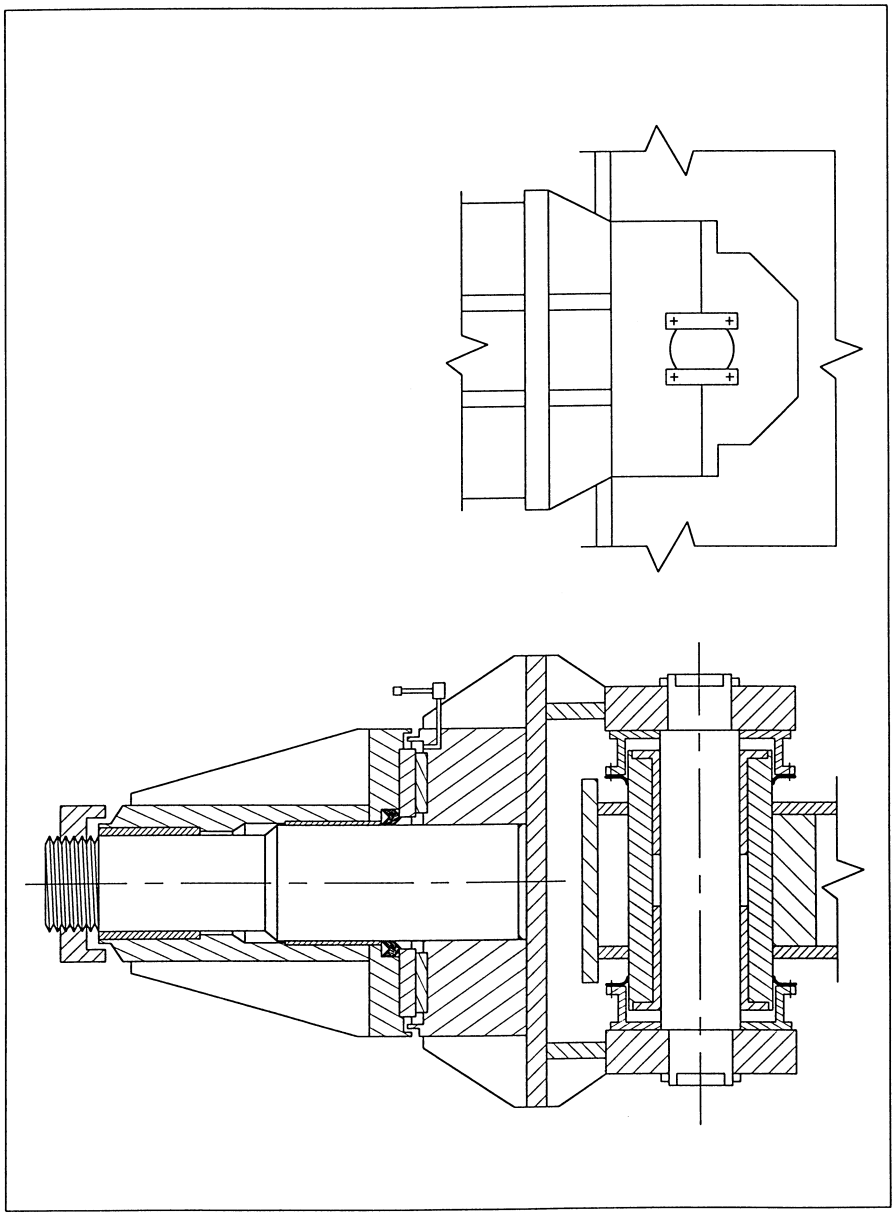

FIGURE 20
FLOAT PIN

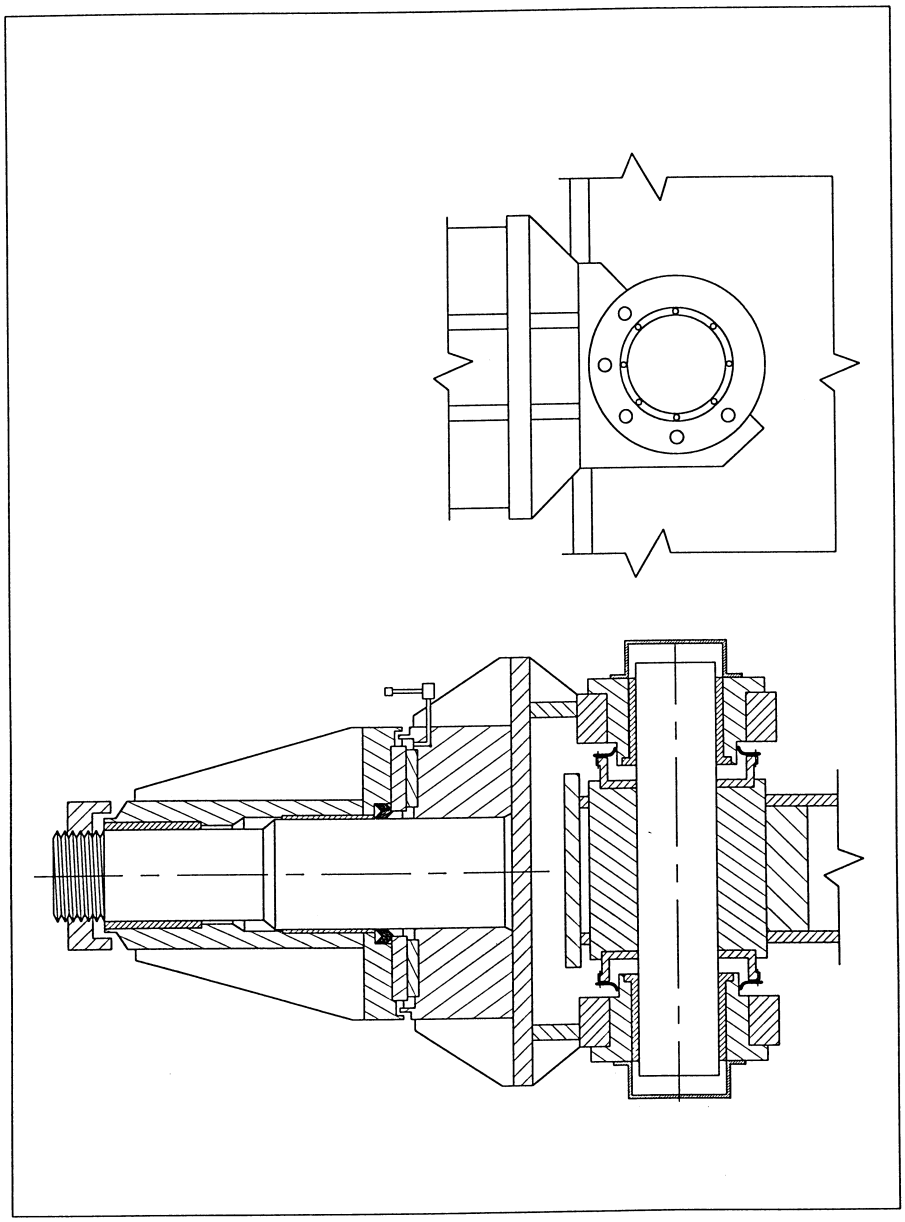

FIGURE 21
FLOAT PIN

The newer cranes have identical (or mirror image) powered trucks with one driven and one idler wheel. All gearing is enclosed (inside gear reducers) with the output shaft connected directly to the wheel axle. Except for the wheel pockets at the ends, these travel trucks are sealed box weldments.

4.2.11 Fasteners and Connections. Keeper bars on various components – pivot pins, rocker pins, boom hinge pins, roller path fixed axles – not being subjected to any calculable or significant loads, are secured with two screws torqued to the mechanical design criteria. Screws and bolts holding caps and retainers over bearings and bushings in most cases are likewise out of any direct load path, and are torqued to the mechanical design criteria. Fastener sizes are selected to nominally match the dimensions of the surrounding structure and the installation torque is often governed by the strength of the tapped threads in the base material. (Fasteners which are in direct load path must be individually analyzed and sized according to the applicable design criteria.) All these fasteners, are required to be locked against loosening, either by means of lock washers or lock wiring of their heads to each other or the adjacent structure.

Bolts and studs holding the roller path rail segments are required to comply with the structural design criteria. When the rail segments are embedded in an epoxy resin compound, their installation must follow the recommendations of the resin manufacturer. The bolts or studs securing the rotate bearing to the crane structure must be selected and installed according to the bearing manufacturer’s requirements.

Bushings and thrust washers that have grease grooves that require alignment with grease injection holes must be fastened to their support structures with threaded fasteners. Flangeless bushings may be locked in their housings with setscrews installed in tapped pockets at the press fit bore. Flanged bushings and thrust washers may be secured with counterbored or countersunk screws. These fasteners should be locked against backing out by staking.

4.2.12 Wire Rope Pendants. Stationary wire rope assemblies, such as pendants, should use 6x37 or 6x19 classification bright or galvanized wire rope with poured (zinc or resin) sockets or swaged fittings.

4.2.13 Painting and Corrosion Protection. Structural-mechanical components should be painted for corrosion protection in the same manner as the structural components and weldments, described in paragraph 4.1.29 and subparagraphs – but with the following exception:

a) Working surfaces – those subjected to rolling, sliding, or pivoting motion – must be left unpainted. (The relative motion with mating surfaces, and periodically applied lubrication, prevent corrosion on them. Various pins, roller treads, rail and roller path running surfaces are in this category.)

b) Corrosion resistant metals and plating should be left unpainted. (Stainless steel, copper alloys, aluminum, galvanized wire rope pendants, and chrome plated steel pins are in this category.)

c) Lubrication fittings must be left unpainted.

d) Rotate bearing bolts, studs, and nuts must be left unpainted. (These items require periodic inspections and checks of their tension.)

e) Non-structural fasteners, such as those retaining keeper bars, etc., should be painted without blast cleaning.

4.3 Mechanical. The vast majority of mechanical components are standard commercial items, usually designed and built to existing industry standards. They range from the complete hoist assemblies to load hooks. The standard commercial items are described in catalogs and advertising literature; however, such descriptions must be reviewed and understood to ensure that the desired ratings and design factors are being provided.

4.3.1 Hoists. The hoists are the most critical assemblies of any crane - they raise, lower, hold, and stop moving loads – and warrant the most attention to their design and quality of workmanship. Depending on the application, the hoists may be built-up to the precise specification requirements or they may be standard commercial units designed to a particular service or duty class. The built-up hoists are always electric motor driven and with wire rope reeving. The standard commercial hoists may be electrically, hydraulically, or manually driven and may use either wire rope or chain reeving.

4.3.1.1 Built-Up Hoists. In the typical arrangement, the electric motor is connected to the gear reducer input (high speed) shaft by a full-flexible coupling with one shoe brake installed on the opposite end of the input shaft and another brake installed either on the outboard (tail) end of the motor or on the coupling hub on the gear reducer input shaft. There are several options for connecting the gear reducer output shaft to the wire rope drum:

a) The output shaft may be connected directly to one stub shaft of the wire rope drum by a full-flexible coupling, in which case the drum must be supported independently on two stub shafts, each mounted in a bearing.

b) The output shaft may be pressed directly into the drum hub, in which case the inboard drum stub shaft and support bearing may be omitted if the adjacent gear reducer bearing has adequate capacity. Alternatively, a bearing of adequate capacity may be installed to support the inboard drum stub shaft and the adjacent gear reducer bearing removed. In both of these arrangements, the three bearings must be mounted on solid foundations, aligned/shimmed very accurately to preclude built-in stresses. It should be noted that although self-aligning bearings are commonly used in these applications, they take up the angular, but not the parallel, misalignments.

c) To avoid the stringent alignment requirements of (b) above, the inboard stub shaft may be replaced by a barrel type coupling to provide the radial support and to transmit the drive torque. Barrel couplings are designed for angular misalignments of up to 2.0 degrees (similar to semi-flexible couplings) and have much greater radial load capacity than the shaft-to-shaft couplings. The barrel couplings are flange mounted by a ring of bolts to the drum end plate. The adjacent gear reducer bearing must have adequate capacity for the imposed radial loads.

d) The output shaft may terminate with a gear pinion, which engages a ring gear on the drum. In this arrangement the drum is supported independently by

stub shafts mounted in bearings. The mating ring gear and pinion must be accurately aligned and positively secured to ensure proper gear tooth contact. If required, the outboard end of the output shaft may be supported by a third bearing, in which case precise alignment of the three bearings is critical.

e) For the most severe duty, the preferred arrangement is to install an intervening pinion on a shaft, independently supported by two bearings, between the output shaft and the drum ring gear. The pinion shaft is connected to the output shaft of the gear reducer by a full-flexible coupling and the pinion is aligned with the ring gear as in (d) above.

Arrangements (d) and (e) above, are sometimes modified by replacing the stub shafts with hubs and bushings or bearings which are supported by and rotate on a stationary through shaft. The pinion and ring gears should be spur type to avoid axial forces on the bearings and the support structure (pedestals).

Luffing (boom) hoists, being under the constant load of the boom, require a ratchet-and-pawl mechanism to positively lock the drum against any possible drift. The ratchet is located either in the center of the drum or at one end (opposite the ring gear, if present). The pawl is controlled from the operator’s cab by an electric or a pneumatic actuator. The operating system should be designed so that application of power is not required to maintain the pawl in the position in which it is placed by the actuator. Over-the-center counterweighing is a common method of providing that feature. When engaged, the pawl is moved into the space between the ratchet teeth, but it need not be in contact with the face of the ratchet tooth.

All hoist assemblies are required to be equipped with two limit switches to block the hoist motion beyond the intended operating range. One of the limit switches should be block actuated and the other geared type. Normally geared limit switches are coupled directly to the exposed end of the drum shaft. On hoists with drums mounted on stationary shafts, the limit switches are connected to the drums by means of roller chains and sprockets.

4.3.1.2 Commercial Base/Deck Mounted Electric Hoists. Electric hoists with wire rope reeving and suitable for installation on twin girder bridge, traveling wall, gantry, and semi-gantry cranes are designed and constructed according to the commercial standards of ASME HST-4M. These hoists are mass produced by established manufacturers of the crane industry. They are compact designs intended for base mounting on trolley frames, and have many optional features. They range in capacities up to 35 tons and should be selected for all general purpose applications.

4.3.1.3 Commercial Hydraulic Hoists. Hydraulic hoists utilize either a high-torque/low-speed (HT/LS) hydraulic motor flange mounted directly to the end plate of a wire rope drum or a low-torque/high-speed hydraulic motor coupled to a planetary gear reducer inside the drum. Both designs are standard commercial units and are exceptionally compact. Normally the wire rope drum is the only component that is custom designed for the specific application. The HT/LS hoists include one or two band brakes acting on the outer circumference of the motor housing. The HT/LS design is the more robust of the two and is well suited for the most severe service and, with completely sealed and oil-submerged working parts, for environments which cause corrosion problems for relatively exposed electric and mechanical components associated with built-up electric hoists.

4.3.1.4 Commercial Underhung Hoists. Underhung hoists may be integral with the trolleys (hoist/trolley units) or separate – hook, clevis, or lug suspended. (For fixed installations, hoist designs are available for ceiling, wall, or base/deck mounting.) All underhung hoists and hoist/trolley units are standard commercial items which are mass produced by established manufacturers of the crane industry. For many applications these hoists and hoist/trolley units are the only practical choice; therefore, the specified features and options must be limited to those offered by the manufacturers. The only feasible modifications are the replacement of the wire rope, hook block, and the suspension hardware. The hoists may be electrically powered or manually operated by means of a hanging hand chain. The integral trolleys may be electrically powered, manually operated through a hand chain and gears, or plain (hand pulled on the load hook or suspended load). The reeving may utilize wire rope or welded link load chain.

All underhung hoists are equipped with an electro-mechanical disc brake and optionally, a mechanical load brake. The mechanical load brake is a device which prevents the load from lowering unless the drive motor is energized to turn in the lowering direction. When the mechanical load brake is not provided, the entire hoist assembly is arranged in the shape of a long cylinder – with the wire rope drum in the center, motor on one end, and the planetary gear reducer with the disc brake on the other. When the mechanical load brake is provided, it is installed on the wire rope drum shaft and the other hoist components are arranged in line on a parallel axis. The hoists may be single or double reeved. With single part reeving, the hoist must be suspended with the wire rope drum in line with its supporting girder because the hook block shifts its position horizontally during vertical travel. With double reeving, its parts being mirror images of each other and thus providing balance and true vertical travel of the hook block, the hoist can be suspended in line or crosswise under its support girder. Chain hoists, although “single reeved”, are arranged so that the hook block does not shift horizontally during hoisting and can be suspended in either orientation.

Underhung hoists and their trolleys are intended for operation on flanged beams (structural shapes or patented track) and can negotiate curves. ASTM HST-1M is the industry standard for electric chain hoists and hoist/trolley units, and ASTM HST-2M is the industry standard for hand operated chain hoists and hoist/trolley units. ASTM HST-4M is the industry standard for electric wire rope hoists and hoist/trolley units. ASTM HST-5M and HST-6M are the industry standards for pneumatic chain hoists and hoist/trolley units, and pneumatic wire rope hoists and hoist/trolley units, respectively. These items are usually specified for hazardous (explosive) environments and require special features to protect against sparking; they should always be procured, or have the procurement specifications approved, by the NCC.

4.3.2 Travel Drives. Travel drives on all cranes (except mobile, which are of the automotive type) are either of the center drive type (with outward extending drive shafts to wheels on both rails) or individual type (driving the wheel or wheels on one rail directly or through a short drive shaft). The center drive types are mechanically interlocked; the individual types require electrical synchronization of their drive motor speeds when the cranes operate on straight rails; and electrical de-coupling to permit them to adjust their speeds as required when they travel through curves.

4.3.2.1 Bridge Travel Drives (On Walkways). On cranes with twin overrunning bridge girders, the bridge travel drive is located on the full-length walkway of the drive girder. The drive may be any of several arrangements, but the most common are those identified in CMAA #70 as types A-1, A-4, and A-5. All bridge drives are designed to accommodate any relative/rocking motion between the walkway and the end trucks.

The A-1 drive has a parallel shaft gear reducer positioned at the center of the drive girder, with the output shaft coupled to a squaring shaft at both ends. The squaring shafts are coupled directly to the axles of the drive wheels mounted in the travel trucks. The input shaft of the gear reducer is coupled to the electric drive motor. A shoe brake is installed either on the outboard end of the drive motor or of the gear reducer, or on a brake wheel coupling between the motor and the gear reducer. On small capacity cranes, the drive motor may include an integral disc brake.

The A-5 drive is identical to the A-1 drive, except that intermediate gear reducers are added between the center gear reducer and the drive wheel. A-5 drives are appropriate for cranes with long bridge spans when the single center drive is desired but where the length of large diameter shafts becomes a significant cost consideration.

The A-4 drive is comprised of two mechanically independent drives – one at each end of the drive girder. Each independent drive has an arrangement similar to the A-1 drive, except that the gear reducer output shaft is coupled to only one short drive shaft. Since there is no mechanical connection between their two halves, the A-4 drives require electrical synchronization of the drive motor speeds. These drives are frequently used on cranes with long bridge spans when there is no requirement for the center drive.

4.3.2.2 Bridge Travel Drives (Suspended). On cranes with underrunning bridge designs (that have no walkways) the bridge travel drive may be a built-up center drive type, similar to the A-1 drive, or a set of standard commercial drive heads.

The center drive is mounted on the drive girder of a twin girder underrunning bridge or the outrigger beam of a single girder underrunning bridge. The center drive differs from the A-1 drive only in its drive wheels, which may be in the form of spring loaded elastomeric traction tires pressing on the underside of the runway beams or flanged steel wheels running on the runway beam flanges. The flanges of the steel wheels have gear teeth cut into their circumference which mate with the drive pinions. The drive pinions are configured to engage both geared wheel flanges (on both sides of the runway beam web). The bridge end trucks for these drives are often built-up custom designs.

Drive heads are standard commercial units, each equipped with its own electric motor, a speed reducing gear set, and a pair of wheels (on opposite sides of the runway beam web) driven in the same manner as for the center drive.

For some applications, it is also practical to use drive heads of the tractor type. Tractor drive heads do not carry any crane weight and must depend on a spring applied load to develop the drive traction. These drives are arranged similar

to the type described above, but use a driven elastomeric traction tire pressing on the underside of the runway beams.

4.3.2.3 Portal and Gantry Travel Drives. Travel drives on portal cranes, container cranes, gantry cranes are mounted directly on the travel truck structural frames. Each drive is self-contained – with an electric motor, brake, and speed reducing gearing.

The older portal and gantry cranes use a combination of a gear reducer and a number of open gear sets for speed reduction. Their final drive is comprised of an idler gear driving two wheel gears which are either bolted directly to the wheel or pressed and keyed on the wheel axle. With this arrangement, the crane travels on a complement of powered trucks (in which both wheels are driven) and idler trucks (in which neither wheel is driven). The interlocked set of idler gear, two wheel gears and their wheels, and the rail present design (component sizing) and machining (accuracy) complications. Since both wheels are forced to rotate at identical speeds, their tread diameters must be perfectly matched to preclude locked-in torque and stress from building up. In practical terms, the two driven wheels can never have identical tread diameters, and will attempt to travel slightly different distances along the rail for the same amount of rotation. The only means of compensating for this difference is for one or both wheel treads to slip on the rail surface. The imposed wheel slippage torque due to high wheel loads and friction coefficients dictates the design parameters for many of the mechanical, structural, and electrical components of the travel trucks. The open gear sets present difficulties in shielding them from the weather and wear-causing contamination. Hand application of grease provides poor lubrication.

Newer cranes avoid the wheel slippage condition by driving only one wheel per travel truck, and thus making all travel trucks identical in this sense. Furthermore, all speed reduction is achieved within gear reducers (which are sealed and oil-bath lubricated). The entire drive assembly is normally a flange connected set of electric motor, gear reducer, and disc brake. The gear reducer has a hollow shaft which drives the wheel axle through a spline, press fit and key, or a compression sleeve. The drive assembly may be bolted to a structural foundation on the truck frame or supported by the wheel axle and a torque arm. With either mounting, the drive assembly is removable as a unit for maintenance or replacement. The preferred gear reducers are parallel shaft helical and right angle spiral bevel types with all gears arranged horizontally; other speed reduction units and vertical gear arrangements may be used with the approval of NCC.

4.3.2.4 Wall and Semi-Gantry Cranes. Travel drives are combinations and modifications of A-1, A-4, or the newer designs of the portal and gantry cranes.

4.3.3 Trolley Drives. Trolley drive wheels are mounted on a common axle, extending across the width of the trolley frame, which is driven through a gear reducer mounted anywhere between the wheels or outboard of one of them. The gear reducers may be parallel shaft or right angle type with spiral bevel or worm gearing. It is desirable to avoid vertical gear trains to preclude the possibility of oil leakage around the shaft seals.

Trolley drives which are integral with the hoist/trolley units are standard commercial designs similar to those described in paragraph 4.3.2.2 above.

On container cranes there are several trolley drives available. The trolley may be driven by means of an axle with two wheels, individual drives (as on newer cranes described in paragraph 4.3.2.3 above) on two wheels, or by a wire rope hoist reeved to pull the trolley in either direction along the boom and main beams. There is no clear advantage with any of these drive options; however, the hoist type may produce some degree of jerking as the slack of the loose wire ropes is taken up at the start of the motion.

4.3.4 Portal and Floating Crane Rotate Drives. Rotate drives are normally installed on the machinery deck of the rotating upperworks and are unique in that their gear reducers must have vertical (downward projecting) output shafts. These gear reducers include an internal drywell around the output shaft to avoid submerging the shaft bearing seal under oil, which might necessitate periodic seal replacements involving major disassembly. However, the presence of the drywell requires that the lower output shaft bearing be lubricated separately with grease. The last gear set, which in most cases is located above the lubricating oil level, must be lubricated by means of an electrically driven oil pump discharging oil directly on the gear teeth. The output shaft is normally coupled to an intermediate shaft with a pinion which engages the bull gear teeth. The gear reducer input shaft, when horizontal, allows the normal installation of a shoe brake. When the gear reducer input shaft is vertical, the standard shoe brakes must be modified to prevent their linkage from sagging and applying the brake shoes unevenly to the brake drum. Electric motors should also be ordered for vertical operating orientation.

Planetary gear reducers and cycloidal speed reducers (both with vertical input shafts) driven by electric or hydraulic motors, have been used successfully on portal cranes of 25-ton capacity. These units include disc brakes designed for mounting on vertical shafts.

Good contact pattern between the pinion and bull gear teeth is critical to the proper and long-term operation of the rotate drive. Therefore, the rotate drive installation must include provisions for accurate adjustment of the gear tooth mesh. The intermediate pinion shaft, connected through a full-flexible coupling, provides the means for such adjustment. The pinion end, which is supported by a self-aligning bearing, can be brought into accurate gear tooth engagement by mounting the bearing housing on the structural extension of the machinery deck. The bearing housing can then be permanently secured in that position. Alternatively, the output shaft may be supported by a rigid tubular extension from the base of the gear reducer and the entire rotate drive assembly is then positioned and permanently secured in the desired position. With either arrangement, the pinion should have its teeth crowned to compensate for likely non-parallel condition of the two gear axes due to rocking of the upperworks under varying loading conditions. Lack of crowning in this situation will cause severe edge loading of the gear teeth and premature failure.

4.3.4.1 Special Considerations. Wind load on the boom is a major, often the dominant, force on the rotate drive. On floating cranes, the compound list/trim angle determines the slope against which the rotate drive must advance the upperworks – with rated load at maximum radius or no load and boom at minimum radius. It is also important to consider the overhauling (backdriving) condition which can be imposed on the rotate drive by the wind load on the boom. A dangerous “runaway” situation, where the rotation starts when the brake is released or is faster than intended by the operator, may be created if the rotate drive train is easily backdriven.

Older cranes with roller path and king pin rotate mechanisms are normally equipped with a single rotate drive. Its pinion-bull gear forces affect the sizing of the king pin bushing. Newer cranes with the rotate bearing have two rotate drives, one on each side of the machinery deck. Depending on their relative positions, the pinion-rotate gear separating forces can be neutralized to a large extent. The additional advantage of two independent drives is the capability of limited rotate operation with the loss of one drive.

4.3.5 Micro-Drives. Sustained slow speed operation of a hoist or travel motion can be provided by a micro-drive. This drive is comprised of an electric motor, gear reducer, brake (on the motor shaft), and a clutching mechanism to the motor shaft of the main drive. The clutching mechanism is either a toothed coupling (two opposed discs with interlocking radial teeth) or a friction clutch. The clutching mechanism is electrically operated and sized for continuous energization in the disengaged position. The toothed coupling additionally requires a sensor to confirm its engagement (via axial position) prior to release of the main drive brake. When engaged, the micro-drive delivers the same torque to the main drive train as would the main motor (which at this time acts merely as a connecting shaft to the main drive gear reducer) but at much slower speed.

On main drives with a single brake, the micro-drive brake substitutes for the main drive brake, which is deactivated when the micro-drive is engaged. On main drives equipped with two brakes (usually on a hoist), the micro-drive brake substitutes for the primary (instantaneous) brake; the time delayed brake is not deactivated when the micro-drive is engaged, and its function is not changed.

Micro-drives are usually built-up and added-on assemblies. They complicate the electrical control system and expand the drive train. They should be used only when normal production process includes prolonged slow speed operation or precise positioning. Micro-drives are also called inching or pony drives.

4.3.6 Assemblies and Components. Mechanical assemblies and individual components include those which are always standard commercial off-the-shelf items, those which are always custom made, and those which may be either.

4.3.6.1 Definition of Standard Commercial Assemblies and Items. Standard commercial assemblies and items are defined as products which are advertised for sale in current commercial literature and are being sold in substantial quantities on the open market in the course of normal business operations. (Nominal quantities, as normally associated with models, samples, prototypes, or experimental units are not within the limits of this definition.)

The choice of standard commercial assemblies and items should be based on the particular manufacturer’s published ratings, selection method, or prorating (if required for the specific application). Industry standards that govern the design or quality of commercial assemblies and items should always be invoked as the acceptance criteria.

4.3.6.2 Gear Reducers. Gear reducers (also called enclosed gearing) are sets of mating gears within housings which totally enclose them, provide rigid structural support, and bathe them with lubricating oil. The input (high speed) gear set should always be some form of angled gear tooth form – helical (including double

helical and herringbone), spiral bevel, or worm. The output (low speed) gear set may be of the straight gear tooth form – spur or plain bevel. Gear shafts may be arranged in any orientation with respect to each other and either horizontally or vertically. There is a wide variety of options for shaft connections and housing mountings in any position. The input and output shaft lengths and other details can be customized by the gear reducer manufacturer per the crane designer's request. In such situations it is important to ensure that the magnitude of the "overhung" moment on the output shaft and the associated bearing capacity/life are satisfactory. For vertical shaft designs, oil pumps are available to ensure adequate lubrication of the last gear set above the drywell. Since such designs are most common on rotate drives, which have relatively little motion but heavy starting loads, electric pumps are used to discharge oil on the last gear set as soon as the rotate drive is energized.

Base/foot mounted housings normally have four or six feet with holes for through bolts. The foot-foundation interface requires a close fit, which is obtained by accurate shimming. (The shimming also serves to align the shafts with the adjoining components.) Base/flange mounted gear reducers mate with a machined surface which ensures a solid seating on the foundation or an adaptor. Flange connections on the output end of gear reducers should be made with through bolts. A commonly available option on gear reducers is an input shaft and flange design for connection to standard industry flanges of electric motors and disc brakes. The flange connections are normally made with screws and threaded holes in one of the flanges. Shaft mounted gear reducers are often used on the travel drives of various cranes. They have a hollow output shaft for mating with the driven axle or squaring shaft. The shaft-to-shaft connection is made with a light press fit and key, a spline with a sliding fit, or a compression sleeve. With the last two connections, the gear reducers (and all other attached drive components) are easily removable for servicing. The housing is mounted by means of a torque arm which is subjected to the full torque of the drive. Since the torque arm reaction is reversed whenever the drive direction is changed, the torque arm should be a sturdy structural-type of a link. The torque arm connection to the foundation should be made with the pin in double shear. (Threaded rods are prohibited for this purpose.) In lieu of the torque arm, these gear reducers may be base mounted; however, such mounting must be done very accurately to preclude the introduction of any built-in stresses due to misalignment.

Gear reducer housings are of intricate shapes, with numerous stiffeners and provisions for mounting and disassembly. The smaller the size, the more likely that the housing will be a casting (iron or aluminum); and the larger the size, the more likely that it will be a steel casting or weldment. For built-up hoists and rotate drives of portal and floating cranes, the housings must be steel or ductile cast iron. On other drives, the housings must be gray cast iron or cast aluminum. Some of the smaller size gear reducers have blind tapped mounting holes in their walls. This mounting method does not provide a visual confirmation of adequate thread engagement and should not be used without approval of NCC.

4.3.6.3 Planetary Gear and Cycloidal Speed Reducers. These speed reducing devices are more compact than the gear reducers for comparable reduction ratios. Their internal components are totally enclosed and otherwise similar to gear reducers. Planetary gear speed reducers are normally used on packaged underhung hoists. The cycloidal speed reducers have been used successfully on rotate drives. These devices may be used only with the approval of NCC.

4.3.6.4 Pump Drives. As the name implies, these units were developed specifically for driving multiple hydraulic pumps from a single power source. However, they have been modified for other applications. Pump drives have the gears arranged so that a single input shaft, usually from an electric motor or a diesel engine, can drive several hydraulic pumps or electric generators. The power source connection may be in the form of a spline, key, clutch, or a manually engaged/disengaged cutout coupling. Unlike the speed reducers, pump drives are intended to function primarily as power splitters; the speed reduction is a secondary function and is limited to a single stage (gear mesh).

4.3.6.5 Open Gearing. Open gearing is often used as the last gear set to obtain the desired output from a drive. The most common applications are the built-up hoist drives, rotate drives, and travel drives of older portal cranes. It is the slowest and the most heavily loaded set of gear train. Accordingly, spur (straight) gearing, which does not produce any axial loads on the support structure, is recommended. The pinion should have its teeth crowned to avoid damaging edge loading of the teeth, which can be expected due to the high loads and uncertain structural support. The design of open gearing of all types is governed by AGMA standards. Open gear sets are normally grease lubricated. Whenever feasible, they should be protected by a metal cover with spring loaded lids for inspection of the gear teeth, tooth contact at the mesh, and lubrication.

Travel drives of the older portal cranes typically drive the two wheels of the powered travel truck through an idler gear. The teeth of the idler gear are subjected to constant load reversals due to their engagement with the drive pinion and the wheel gears – regardless of the direction of rotation. In order to account for this severe operating conditioning, the bending strength rating of the idler gear is reduced to 70 percent of its normal rating.

4.3.6.6 Shafts, Axles, and Pins. All gears and travel wheels, with the exception of those in the rotate assembly and carrier yokes, should be pressed on and turn with their shafts or axles. All gears and driven wheels should also be keyed to their axles. Additionally, helical gears should be seated against a shoulder machined on their shafts to absorb the axial force due to the helix angle. Diameter differences at the shoulders should be minimized and the radius of the fillet should be as large as the design permits so as to mitigate the stress concentration factors. Squaring and floating shafts, which normally have coupling hubs pressed on their ends, should not have their end diameters reduced below 90 percent of the shaft diameter. Mechanical pins are stationary members which support pivoting components of operating mechanisms (such as ratchet pawls or spud locks) or sheaves. It is common practice to drill numerous holes through these pins to serve as lubrication passages to the bushings or sheave bearings mounted on them. The loss of strength due to these holes must be considered in the design of the pins. The location and geometry of the keyseat must be evaluated for its effect on the fatigue strength of the shaft or axle.

Squaring shafts and floating shafts are usually obtained as standard commercial turned-ground-polished steel shafting. Fleeting sheave pins, which are exposed to the weather and carry bushings that turn and slide on them, must be either corrosion resistant steel or plated with nickel and hard chrome to make them corrosion resistant. These shafts are not drilled for lubrication. The fleeting sheave bushings are lubricated through grease passages in the sheave hub and the bushing.

NCC policy is to require both ends of pins to be locked – this may be in the form of a keeper bar on each end or a head on one end and a keeper bar on the other end. The only exception to this practice is to permit only one end to be secured with a keeper bar if the other end protrudes by at least half the pin diameter, not including the chamfer. Keeper bars should never be welded to the pins.

Wire rope drums of built-up hoists typically have welded stub shafts on their end plates. These stub shafts are integral parts of the drum weldment. Alternatively, a rotating through-shaft may be pressed and keyed into hubs of drum end plates and supported by pillow blocks. Some cranes have end plates with hubs and bronze bushings or bearings in place of stub shafts. With this arrangement, the drum rotates on a stationary shaft passing through the length of the drum.

4.3.6.7 Couplings. Couplings are standard commercial assemblies of established manufacturers. All torque carrying components of couplings, with a few exceptions discussed below, must be steel. Couplings are designed to be full-flexible, semi-flexible, or rigid. The first two types have provisions for grease lubrication. The hubs have concentrically machined bore and outside diameters which permit the installation of specialized equipment for precise shaft alignment. Coupling hubs may be bored and slotted for the keys to the exact requirements of the customer or may be purchased unfinished.

Full-flexible couplings have two hubs, which are pressed and keyed on the shaft or axle ends, and a two piece flange connected sleeve fitted over the hubs. The hubs have external gear teeth cut on their circumference and the sleeve has internal gear teeth which mate with those on the hubs. Each sleeve flange has a lubrication plug in its periphery and an O-ring seal on the hub seat. The torque is transmitted through the two sets of gear teeth. This coupling design can accommodate angular misalignment and parallel offset between the two ends. A variation of the above design has the sleeve replaced with a steel spring grid between the hub gear teeth. The torque is transmitted as a shear load across the grid. A non-load bearing cover is installed over the hubs and the grid to keep them engaged and contain the lubrication grease. Full-flexible couplings should be limited to these two designs. (For lubrication, a plug in one sleeve flange is temporarily replaced with a standard lubrication fitting, the plug in the other flange is removed, fresh grease is injected and old grease is purged through the open plug hole, and the plugs reinstalled.) Full-flexible couplings are mandatory for connecting shafts and axles with adjacent bearing supports. When installed on vertical shafts, the couplings must include a disc clamped between the sleeve flanges to keep the sleeve from sagging out of its intended position on the hubs.

In gear type semi-flexible couplings, one of the hubs and its half-piece of the sleeve are made into a single component. The deletion of one of the gear tooth meshes limits the coupling to compensating only for angular misalignment. Alternatively, a coupling with a steel grid installed over external teeth of two coupling hubs, also functions as a semi-flexible coupling. Semi-flexible couplings are mandatory for floating shafts and shaft arrangements where the bearing support of one shaft is adjacent, and the other is distant, from the coupling.

Rigid couplings are comprised of two flanged hubs bolted together. Less common but found most frequently on older bridge crane travel drives are the clam shell types of rigid couplings. There are single piece or matched pairs of steel or ductile castings in the form of heavy-walled tubes. The single piece design is cut lengthwise on one side and slotted on the opposite side so that it can be clamped with a row of bolts along the cut side. The two piece coupling has a row of clamping bolts on both sides of the coupling. Machined key slots are usually provided on both ends of these coupling shells. Rigid couplings are permitted only on long shafts (with distant bearing supports) where shaft deflection easily compensates for any misalignment.

4.3.6.8 Special Couplings. Couplings between the diesel engine and the electric generator include elastomeric elements between the flange and hub. The flange that mates with the diesel engine flywheel is face mounted with a ring of bolts; the hub is pressed onto the shaft of the electric generator and secured with a key on the shaft.

Rotate drives on older cranes have unique “built-up” couplings, generally known as “Olham” or jaw type. They rotate slowly but carry the maximum torque of the drive. The most common designs feature two slots at right angles to each other and a sliding key in each slot. This arrangement compensates for substantial parallel offset and limited angular misalignment.

Limit switches are connected to the shafts by small, light duty couplings designed especially for that purpose. One end of the coupling is face mounted on the end of the wire rope drum shaft. Functionally they are full-flexible.

4.3.6.9 Bearings. Antifriction bearings are precision assemblies of hardened and polished rolling elements and concentric races (rings). There is a large variety of bearing designs to fit every crane application. Some bearings are available as sealed, permanently lubricated assemblies; other types are open, requiring installation of separate seals and provisions for lubrication. Bearings which require periodic grease lubrication have their races grooved and drilled for the distribution of injected grease. Installations of grease lubricated bearings must include provisions for the purging of old grease – either past the seal lips or through relief fittings. The press fits of inner races on the shafts and axles, the fits of the outer races in the housings, and clamping of the races must follow the bearing manufacturer’s installation criteria to obtain satisfactory bearing performance. Ball bearings, having much lesser load carrying capacity than the roller types, are used primarily within standard commercial assemblies such as electric motors and disc brakes.

Double-row spherical roller bearings have two barrel-shaped side-by-side rings of rollers which roll on the internal spherical surface of the outer race. This arrangement makes them inherently self-compensating for any angular misalignment between the shaft and housing. They are recommended for support of shafts and axles without heavy axial loads. Travel wheel axles, open gearing shafts, and hoist drums are most often mounted on these bearings.

When heavy axial loads are present, tapered roller bearings are required. They can be selected with the tapered rollers at any desired angle to obtain the proper balance between their radial and axial load capacities. They are normally used in gear reducers where the helix angles of gear sets cause large axial loads. The bearing races must be accurately shimmed on their faces to obtain the proper contact between their conical surfaces and the rollers. Since the internal arrangement of the tapered roller bearings allows them to carry an axial load in only one direction, they must often be used in pairs with opposite taper angles. The bearing manufacturers also offer bearing assemblies where the individual bearing pairs are combined into a single unit. Tapered roller bearings, whether in single row or in pairs, are not self-aligning; they maintain a fixed orientation between the bearing races. Because of this characteristic, tapered roller bearings are recommended for sheaves to stabilize them against tilting on their pins. Alternatively, for light duty applications, a single row cylindrical (straight) roller bearing may be used for sheave mounting.

Thrust bearings are designed primarily for axial loads. They may be in the form of cylindrical roller bearings; tapered roller bearings; or, if self-aligning is desired, spherical roller bearings. All thrust bearings have the rollers arranged with their axes on radial lines. The cylindrical and tapered roller bearings always maintain their races in parallel alignment. The self-aligning spherical roller bearings, because they allow their races to tilt with respect to each other, are used on portal crane gudgeons. All three types of thrust bearings are used on load hooks.

4.3.6.10 Mounted Bearings. Bearings of all types are available in housings designed for bolting to support structures. The most common type is the pillow block. The base of the pillow block, depending on size, may have two or four mounting bolts. The smaller housings are single piece. The larger housings are split along the shaft centerline, with the upper half (cap) secured with two or four bolts. Housings are available with provisions for grease or oil lubrication of the bearing. Pillow blocks subjected to heavy loads have the bearing inner races pressed directly onto the shaft or locked to it by a tapered sleeve that is pulled by a locknut and wedged between the bearing race and the shaft. The tapered sleeve and locknut are provided as integral components of the bearing assembly. The housings of these pillow blocks are required to be made of steel – either as castings or machined from rolled plate as a custom made component. Weldments are prohibited for pillow block housings in these applications.

For light duty applications, such as support of squaring shafts, the inner race may be locked to the shaft by a setscrew in a protruding extension of the race. The housings of these pillow blocks may be steel or any class of cast iron.

Piloted flanged cartridge bearings have accurately machined cylindrical housings which are intended for a close fit in the support structure. The flanges have four bolt holes for mounting. These units are often used as axle bearings on the smaller, light duty bridge cranes. Flanged housings that are subjected to significant loads must be ductile iron or steel castings; those supporting only the weight of mechanical components may be cast iron of any class.

4.3.6.11 Bushings. Bushings, also called plain bearings, are copper alloy (bronze) sleeves which are pressed into bores of mechanical components. Their function is to

allow slow oscillating rotation, or “dithering motion”, of steel shafts or pins. The copper alloy contains substantial amounts of lead and tin to minimize the friction coefficient with the steel surfaces; however, lubrication is still required. The bushing material must always be substantially softer (at least 100 BHN points) than the steel shaft or pin and all grease grooves should be cut in the bushing. The grease groove pattern should be carefully laid out to ensure delivery of grease to locations of high contact stress.

Equalizer sheaves, fleeting sheaves, equalizer bars, travel truck gudgeons and equalizers, and various pivoting and sliding mechanical elements require bushings. Lubrication grooves should be of adequate size to permit easy passage of grease or oil, and their edges must be chamfered or rounded to ensure proper distribution of the lubricant without scraping it off the contacting surface. Gudgeon bushings have specific design requirements, which are described in detail in paragraph 5.2.11.

Bushings should have integral flanges or separate thrust washers of the same material. The outside diameter of the flange or thrust washer should be sized to provide a low bearing stress with the adjacent structure.

4.3.6.12 Keys. Keys should be of the parallel type, made from cold-finished low carbon steel commercial keystock or heat-treated alloy steel. The keys must have the corners chamfered to clear the fillet radii in the keyseats or keyways. The keys should be installed so that it is impossible for them to shift out of position. Normally the keys are square in cross section, but flat keys, sometimes two per hub, may be used where required by the loading conditions.

It is important that the keys be properly fitted in their keyseats or keyways. ANSI B17.1, Keys and Keyseats, prescribes the fit-up criteria for various sizes of shaft diameters and key sizes, and classes of fit.

4.3.6.13 Sheaves. Sheaves are commercially available in standard sizes as steel castings or roll forgings. Cast iron (gray or ductile) sheaves may be permitted only on commercial packaged hoists in light duty applications. Otherwise, when the packaged hoist design makes it practical, cast iron sheaves should be replaced with steel sheaves.

Sheave groove depth, side angle, and bottom radius follow commercial practice and are often intended for two wire rope sizes. For heavy duty applications, the sheave grooves should be hardened by a controlled process. Hard grooves extend the service life of the sheave and the wire rope.

Running sheaves turn on roller bearings which may be permanently lubricated (sealed) or relubricatable through grease fittings in the hub. Fleeting and equalizer sheaves turn on bronze bushings, as described above. On packaged hoists, equalizer sheaves may turn on sintered bronze bushings impregnated with oil.

4.3.6.14 Travel Wheels. All wheels that run on crane rails are double flanged. The tread width is governed by the size of the rail head, with total clearance of 1/4 to 1-1/2 inches, depending on wheel size and crane component. Roll forged and cast steel wheels are available in tread diameters 8 to 36 inches and of various tread

hardnesses up to 615 BHN. Smaller wheels are machined from round bar stock. Flange heights are approximately 1 inch and if the wheels are required to cross rail head gaps at frogs or track switches, the flanges must be designed to carry the full wheel load. The flange interior angle (of approximately 12 degrees) is slightly wider than the rail head angle and the fillet radius between the tread and the flange is slightly less than the corner radius of the rail head. Other details of the wheel tread are adjusted to accommodate the site conditions. Idler wheels are pressed onto the rotating axles; the drive wheels are additionally keyed to the axles. Paired drive wheels, such as those on A-1 and A-5 bridge drives, and those driven by an idler gear in portal crane travel trucks, must have their tread diameters matched to 0.001 inch per inch of diameter but not to exceed 0.010 inch.

Idler wheels of roller path assemblies are relatively small and are usually machined from steel bar stock. They rotate on bushings and fixed axles. Since these wheels are closely spaced and are intended to share the load imposed on either quadrant of the roller path, their tread diameters must be held to 0.001 inch per inch of diameter.

Wheels that operate on patented track are part of the standard commercial carrier yokes and drive heads. They are single flanged or, if their carrier yokes or drive heads are equipped with side guide rollers, flangeless. The driven wheels of the drive heads have extended flanges with gear teeth cut into their circumference. Cast or forged steel wheels are preferred, but cast iron wheels and wheels stamped out of steel sheet may be used when approved by NCC. These wheels rotate on stationary cantilevered pins and bearings. The bearings are either permanently lubricated and sealed, or the pins have provisions for grease lubrication of the bearings.

4.3.6.15 Wire Rope Drums. Wire rope drums of built-up hoists are always custom designed. Drums on older cranes are usually cast, together with the end plates and reinforcing gussets. On newer cranes, the drums are welded either entirely from steel plate or a combination of steel plate, steel pipe, and steel castings. The drums are subjected to the highest torque of the hoist assembly, and the larger the hoist capacity, the more likely that it will have a drum gear as the last connection to its drive train. With the exception of whip hoists, all custom designed drums are grooved with two opposite-hand helixes; and with rare exceptions, the drums are sized to spool all wire rope in one layer. Single-reeved standard commercial packaged hoists may have single-helix grooved or smooth drums and may spool their wire ropes in multiple layers. On single-reeved packaged hoists, with one part of the wire rope winding/unwinding from the drum and going directly to the hook block, the hook is forced to shift its position horizontally during vertical travel. On mobile cranes and whip hoists, the hook positions do not shift because the wire rope winding/unwinding from the drum is routed to a fixed (non-shifting) sheave before it goes to the hook block. In the case of mobile cranes, the drums are smooth (ungrooved) and, because of space restrictions, spool the wire rope in many layers. The spooling, even with various proprietary guiding devices, is often disordered – causing accelerated wear and somewhat erratic hook travel.

When spooling of wire rope in multiple layers cannot be avoided on custom designed drums, the spooling can be kept uniform and orderly by installing parallel grooved half-shells (Lebus lagging) on a smooth drum. The half-shells are steel castings, which are welded or bolted to the drum, and include half-pitch

groove offsets and end ramps/steps to establish orderly spooling. The wire rope spools in parallel wraps for nearly half a circumference, shifts laterally half a pitch, again spools parallel for nearly half a circumference, and again shifts laterally half a pitch next to the start of its wrap. The wire rope builds up higher and wears more rapidly at the offsets (cross-overs) than on the parallel spooled sections. It is also normal to see some sparking or smoking at the offsets because of the wire to wire rubbing as the spooling wrap is forced to shift and cross over an offset of a previous layer.

On custom designed drums, tapped holes for installation of wire rope clamps are normally provided at the ends of the drum barrel. Alternatively, reinforced pockets are provided in the drum barrel or the end plates for anchoring wire rope fittings. Design details of end plates with integral stub shafts must be analyzed to ensure that the heavy loads do not cause buckling of the end plates. On standard commercial hoists it is not practical to change anchoring features on drum.

4.3.6.16 Wire Ropes. Federal Specification RR-W-410 and Wire Rope Users Manual are accepted by the wire rope manufacturing industry as its standards. These two standards prescribe acceptance criteria for all types of wire rope used on cranes, including stationary applications.

Wire ropes are available with either right-hand or left-hand helix, regular lay or lang lay, and spin-resistant construction. Right-hand regular lay is the most prevalent and most readily available construction. It is used on all double reeved systems, except when the hook block must have absolutely no tendency to rotate under load. When hook block rotation is unacceptable, the double reeved systems should have opposite-hand wire ropes installed and equalized at an equalizer bar. (A one-piece double reeved system, even with spin-resistant wire rope, cannot ensure against some block rotation under a heavy load.)

Wire ropes are assembled from strands, which in turn are assembled from individual wires. The strands are twisted around a central core of either an independent fiber, wire strand, or wire rope. Both the strands and the wires are pre-formed to eliminate their tendency to untwist if the ends are not clamped. Right regular lay wire rope has the strands twisted in a right-hand helix, and the wires within the strands in a left-hand helix. Left regular lay wire rope has the helixes twisted in the opposite directions. When assembled in this fashion, the wires exposed on the wire rope exterior are aligned parallel with the wire rope axis. Lang lay wire ropes, whether right or left, have the strand and wire helixes in the same direction. Lang lay wire ropes are more flexible but subject to more rotation under load than their regular lay counterparts.

Spin-resistant wire ropes (also called rotation – resistant and non-rotating) are characterized by an outer ring of strands twisted in one direction, and an inner ring of stands twisted in the opposite direction. There are also proprietary constructions with additional refinements to better equalize the opposite torques developed by the outer and inner groups of strands. This class of ropes is used on whip hoists (with single line hook block and long lifts) to minimize the tendency of the hook block to rotate under load. As a further precaution against rotation, higher design factors (usually 8:1) are prescribed for these wire ropes. (Some mobile crane manufacturers use spin-resistant wire ropes with multiple-reeved hoists. In such cases, a design factor of 5:1 is used.)

4.3.6.17 Wire Rope End Fittings. For wire ropes with ends anchored on the drum and with two or more intervening dead wraps, only a portion of the wire rope pull is applied to the fittings. With that reduced loading, two-bolt clamps are adequate to anchor the wire rope dead ends. On terminal connections, where the full wire rope pull is imposed on the fitting, the fittings should be swaged or poured type. Swaged fittings should be selected and installed per the fitting manufacturer's recommendations. The swaging process uses high pressures on the outer surface of the fitting sleeve to deform it and force the material on its inner surface to flow in between the external wires of the wire rope. This connection is considered to develop the full breaking strength of the wire ropes with a wire rope core. (Wire ropes with a fiber core must have the end section of the fiber core replaced with a piece of wire rope or a steel rod.) Poured (speltered) fittings are made with zinc, following precise cleaning and heating procedures which are normally established by the local crane engineering organization. The speltering process requires the molten zinc to fuse with the wires of the broomed (opened) end of the wire rope. The external shape of the zinc lump takes the form of, and seats in, the conical cavity of the fitting.

Swaged and speltered fittings are available in the forms of a ferrule (a straight cylinder) for insertion into an anchor pocket, closed sockets (with a bow for a loose-fitting pin connection), and open sockets (with two cheek plates bored for a close-fitting pin connection). The closed type sockets, because of their complex shape, are always cast. The open type sockets may be cast or forged in the smaller sizes and cast in the larger sizes.

In recent years resin socketing compounds have become available for poured fittings. The resin socketing process involves the mixing of two substances at ambient temperature and pouring the mix over the broomed end of the wire rope in the socket cavity. The process is simpler and more controllable than zinc speltering and may be used in all crane applications. The producers of resin socketing compounds provide details of the socketing process for their particular products. Wire Rope Users Manual contains a comprehensive description of wire rope end fittings and their installation. Navy activities that do not have standard internal procedures for installing speltered fittings, should follow the recommended procedure of the manual.

4.3.6.18 Hook Blocks. The typical arrangement of hook blocks on double reeved systems has two symmetrical sets of sheaves mounted on a common pin. The hook is positioned in the center on a separate pin (trunnion) for capacities over 15 tons or, for lesser capacities, the sheaves may be mounted on the ends of the hook trunnion. Each sheave rotates on its own bearings, while the trunnion pivots in the cheek plates. All sheaves are completely covered except for wire rope openings. If the sheave bearings require lubrication, the sheave pin (or trunnion) is drilled from both ends for lubrication passages and fitted with recessed grease fittings. The hook is supported by and rotates on a thrust bearing mounted on the trunnion. The hook is installed so that it cannot inadvertently come loose from its nut but can be easily removed for inspection. The weight of the hook block must be adequate to overhaul the reeving system and keep the wire ropes tight. All hook block components in the load path are steel. Single part (whip hoist) hook blocks have an overhaul ball or cylinder connected directly to the end of the wire rope with provisions for mounting the hook underneath. Normally an intermediate swivel fitting is installed above the hook to permit it to be turned without twisting the wire rope. When the overhaul ball or cylinder is a separate, non-load-bearing component, it may be made of cast iron.

Container cranes, instead of a hook block, have a large rectangular frame with a sheave in each corner. The reeving system is intentionally not equalized between the four corners, so that the lifted container does not tilt even when it is unbalanced. The frame has a head block for a rigid connection to the spreader or a cargo beam.

4.3.6.19 Hooks. Load hooks of any capacity are available from commercial sources. In the smaller capacities, the hooks are the manufacturers' standard steel forgings of the single-barb design. Large capacity hooks (50 tons and higher) are often double-barbed and specially fabricated to the customer's specifications. Hooks must be forged by a process that ensures material ductility of at least 18 percent elongation in two inches. Carbon steel and alloy steel are the most common materials for forged hooks. Except for the whip hoist hooks and hooks on small packaged hoists, the hook shanks are always threaded for engagement with a matched nut. The whip hoist hook shanks may be threaded or drilled for a pinned connection; packaged hoist hook shanks may terminate with a ring for pinning, or with a large groove for loose clamping between the halves of the hook block casting. Hooks with the pinned ring mounting have no provisions for swiveling.

Hooks may be fabricated from bronze or corrosion resistant steel for use in hazardous (explosive) or highly corrosive environments. These hooks are usually cast and their mechanical properties are significantly different from forged steel.

Hooks often have some means of securing the slings or other attachments being lifted. Spring loaded devices are available from the hook manufacturers to bridge the hook opening. Alternatively, the hook tip may be drilled and a ring installed for tying a lanyard across the hook opening.

4.3.6.20 Shaft Seals. Seals on shafts of commercial oil lubricated assemblies, such as gear reducers or wet clutches, should be of the spring-loaded synthetic dual lip type whenever this option is available. The selection of oil lubricated assemblies should give preference to those in which the shaft oil seals are not submerged in oil. Oil seals should weep oil slightly to ensure lubrication of the seal lip. If a seal is too tight to weep, its dry lip will damage the sealing surfaces and begin to leak oil prematurely.

Grease seals are used for bearing lubrication on commercial pillow blocks and built-up assemblies, such as travel trucks. These seals usually have a single lip and are intended to allow the old grease to be easily purged outward through them. In certain clean environments, the seals are installed with the lips turned inward (so that grease cannot pass under them) and a separate grease outlet path is provided. (The outlet path should be relatively short so that the purging pressure is not so high that it might blow out the seal lips.) Purged grease should never be permitted to mix with the adjacent lubricating oil.

For sealing shafts between pressed on components or in locations where seal replacement is difficult, a split type of lip seal or a packing gland should be considered. Split lip seals are seal strips that are accurately pre-cut by the manufacturer and may include a garter spring for sealing pressure or may be press fitted into their seats. The size selection of split seals is limited, and if their use is expected, then the original seal size should be made to match an available

replacement split seal. Slowly rotating shafts may be sealed with stacked rings cut from commercial packing material pressed into the gland cavity. The sealing pressure is applied by a screw-advanced gland follower which can be tightened periodically as required.

4.3.6.21 Bumpers. Bumpers are required on all crane structures or components that come into contact with end stops. The simplest and most widely used bumpers are the coil spring and elastomeric types. The elastomeric bumpers are standard commercial items and are available in sizes and designs for every crane application. Coil spring bumpers were commonly used on older cranes, but are used infrequently on the newer cranes. With either type, the bumper must be sized so that the permissible deceleration rate is not exceeded and the total kinetic energy can be absorbed.

Hydraulic bumpers are used only for particularly sensitive applications. Their deceleration rate can be set and readjusted very accurately. They are precision assemblies with hydraulic fluid and seals, which require more attention and maintenance than the other types.

4.3.6.22 End Stops. Each crane bumper should have a matching end stop, sized to absorb the maximum kinetic energy that may be developed by the striking bumper. Overrunning crane bridge end stops should be installed on the runway girders; overrunning trolley end stops on the bridge girder; and portal and container crane end stops on the rail support structure. End stops for underrunning crane bridges, trolleys, and hoist/trolley units should be bolted to the girder web. When two crane components or structures are on the same bridge, runway, or track and are expected to contact each other during normal operations, one of them should have solid stops in lieu of matching bumpers.

End stops which are used as integral “forks” or safety devices of track interlocks (usually on underrunning cranes) normally are designed to contact the wheel tread rather than the bumper. The forks are pivoted to the blocking position when its monorail track is not interlocked with another and pivoted to the open position when the tracks are interlocked to permit the bridge or trolley to transfer from one track to the other.

4.3.6.23 Actuators. Pneumatic, hydraulic, and electric (solenoid) actuators are standard commercial assemblies used to operate mechanisms such as spud locks and boom hoist pawls, monorail track interlocks, and twist locks on container crane spreaders. Each type is designed and constructed according to the applicable industry standards. The output motion of the actuator may be linear or rotational. Actuators operate or engage load bearing components of cranes but are not themselves load bearing.

4.3.6.24 Radius and Capacity Indicators. All cranes with luffing booms are equipped with a radius indicator. Straight-line (fixed capacity) cranes have a mechanical radius indicator composed of links or gears operated by the boom position. This mechanism may have a mechanical connection to the boom for positive activation or a plain pendulum mounted near the foot of the boom within sight of the operator. Cranes with variable capacity ratings have the maximum capacity indicated for each radius reading, usually in 5-foot increments.

Mobile cranes and the newer portal and floating cranes are equipped with electronic combination radius/capacity digital readout devices for additional operational safety. These indicators include automatic warning signals (visual and audible) and limit switches. Load sensing is by means of a load cell installed directly in the reeving system or a less accurate sensing of a transverse load on the wire rope.

4.3.6.25 Spud Locks. The function of the spud locks is to positively secure the crane's upperworks against rotation, as might be caused by strong wind gusts, during periods of inactivity. The typical spud lock has a remotely actuated mechanism that lowers a steel pin from the machinery deck into a pocket in the lower roller path support structure. The older crane designs normally have only one spud lock pocket and when it is engaged, the crane is placed in its most stable position (with the boom parallel with the tracks) and the crane access ladders and platforms are aligned to form a passageway between the stationary lower structure and the rotating upperworks. The newer crane designs have two spud lock pockets, for positioning the boom over the tracks in either direction and the ladders and platforms are arranged to provide a passageway to the upperworks in either locked position. The clearance between the spud lock pin and its pocket is normally 1/8 to 1/4 inch on the diameter.

Spud lock actuators require safety interlocks to preclude damage to the crane from unintentional lowering of the pin while the crane is rotating. The control circuitry must be designed to disable the rotate drive when the spud lock is not fully disengaged and must include a momentary bypass switch to permit jogging of the rotate drive to free the spud lock pin if it is jammed due to drift of the upperworks.

4.3.6.26 Rotate Holding Brakes. Several of the newer cranes are equipped with rotate holding brakes in place of spud locks. These brakes are in the form of low ratio gear reducers (installed to be back-driven and act as speed increasers) with a brake on the high speed (low torque) shaft and a pinion in mesh with the rotate bull gear on the low speed (high torque) shaft. A minimum of three such brakes are recommended on a typical crane. The holding brakes allow the crane to be stowed with the boom in any direction and there is no possibility of accidental damage due to unintentional activation. (The designs of access ladders and circular walkways around the rotate bearing provides access to the upperworks in any orientation.)

4.3.6.27 Ratchet and Pawl Mechanisms. Every boom hoist must include a ratchet on its drum and a remotely actuated pawl mounted on the hoist foundation. The purpose of this mechanism is to ensure that there will be no downward drift of the boom (against the holding brakes) due to the load from its own weight over prolonged inactive periods. The control circuitry must be designed to disable the boom hoist drive in the lowering direction when the pawl is not fully disengaged. However, the drive must not be disabled in the raising direction so that the drum can be rotated slightly to free and disengage a wedged pawl. The pawl operating mechanism should include linkage which allows the pawl to maintain its position (either engaged or disengaged) without any additional application of power.

The pawl is usually a compression member, but pawls loaded in tension are also satisfactory. The security of the pawl/ratchet alignment (side to side) is important to ensure full engagement and avoidance of eccentric loading. It is

recommended that the tip of the pawl include an alignment guide which continuously centers the pawl on the ratchet.

4.3.6.28 Threaded Fasteners. All threaded fasteners of custom designed components, both internal to the assembly and those interfacing with foundations, must be designed or selected to meet the mechanical design criteria. Threaded fasteners of commercial assemblies, both internal and mounting hardware, should comply with the applicable industry standards. Assemblies such as gear reducers, brakes, pillow blocks, electric motors, and other items, have mounting provisions (integral feet or flanges with bolt holes or slots) for specific sizes of fasteners. Unless specified otherwise by the manufacturer, the mounting hardware should be SAE J429 Grade 5 fasteners or ASTM A325 structural bolts with matching nuts and hardened steel washers – regardless of the resulting design factor. (The holes or slots may not be enlarged to accept a bigger fastener to obtain the design factor required for custom designed assemblies.) The installation torque, with lubricated threads, should correspond to approximately 67 percent of the fastener yield strength. The mounting fasteners are normally intended to be subjected only to tensile loads. It is desirable, but not mandatory, to have no threads in the shear plane of the joint. Rough cast surfaces around the fastener holes should be spot faced to ensure solid seating of the fastener head or nut. The contact surfaces of joints must be in full contact prior to torquing the fasteners; torquing must not be used to force components into alignment or contact.

For some commercial assemblies, such as hydraulic high torque/low speed motors, the manufacturers specify the type of mounting fasteners to be used. In the particular cases, the manufacturers' directions must be followed, regardless of other design requirements of this handbook.

4.3.6.29 Shims. Accurate shimming of the foot (base) mounted assemblies is critical for proper shaft alignment and avoiding high initial stresses in the mounting feet. It is also important that the shims do not deteriorate due to corrosion and lose their thickness. NCC policy is to require corrosion resistant shims in all applications and environments – outdoor and indoor. Commercially available kits provide a wide assortment of neatly pre-cut shims slotted for standard fastener sizes. Hand made shims should only be used when the commercial shims do not fit the requirements. Shim stacks should be limited to three shims.

(Commercially available shaft alignment equipment, in addition to providing highly accurate indication of the shaft positions, calculates the required amount of shimming under each mounting foot or corner of the housing base.)

4.3.6.30 Shear Bars. Foot (base) mounted components and housings that are subjected to shear loads which exceed the holding capacity of the mounting fasteners, require additional restraints (shear bars) to maintain their alignment. (The most common examples of such components are pillow blocks supporting a gear pinion, where the gear tooth alignment is critical.) In these cases, the edges of the feet in line with the applied load should be machined flat and the shear bars notched and fitted tightly, with full face contact, to the machine's surface. The fillet welds between the shear bars and the foundation must be oriented parallel with the applied load. Shear bars that are fitted against unfurnished foot edges and fillet welded parallel to the edge serve no useful purpose.

4.3.6.31 Dowel Pins. Dowel pins are press fitted into holes drilled through the foot of the component or housing to be held in alignment and into the foundation. Unlike shear bars, dowel pins are intended only for registering alignment – not for any contribution to the shear bearing capacity of the mounting. Whenever possible, the location of the dowel pins should be in the solid sections of the foot. ASME B18.8.2, Taper Pins, Dowel Pins, Straight Pins, Grooved Pins, and Spring Pins, contains the standard sizes, materials, and installation fits for dowel pins.

4.3.6.32 Cotter Pins. On custom made assemblies, cotter pins may be used only as a means of locking nuts against loosening or for retention of secondary components which are not in the primary load path. Examples of such components are pins that support wire rope anti-sag rollers and wire rope anti-lift off pins over sheaves. Cotter pins are also permitted on standard commercial assemblies, such as shoe brake linkage pins. However, when standard commercial items are available both with and without cotter pins, those without cotter pins are preferred. Examples of items with both options are the carrier yokes of underrunning cranes. Figure 22 shows examples of carrier yokes which are the standard designs of major manufacturers in the industry. Any of these designs or their variations are acceptable.

Underrunning cranes configured to operate on structural I-beam sections, rather than patented track, typically have carrier yokes with angled wheels and the yoke frame held together by a cross pin with cotter pins on the ends. The suspension lug is centered on the cross pin by stacks of plain washers on either side. Although there is no “calculable” load on the cotter pins when the cross pin is straight, the cotter pins may be sheared off if the cross pin becomes bowed. Existing cranes’ carrier yokes of this type that show evidence of bowing on the cross pin should be modified to replace the cross pin, washers, and cotter pins with a weldment composed of full length heavy walled pipe, suspension lug, cross pin with threaded ends, and nuts with cotter pins.

Steel cotter pins on outdoor installations, even when they are part of a standard commercial assembly, should be replaced with their corrosion resistant steel equivalents. Examples of such assemblies are the cotter pins on the boom section joints of mobile cranes.

4.3.6.33 Retainer (Snap) Rings. Snap rings are designed to seat into deep grooves (in the shaft, hub, or housing) over nearly the entire circumference and are capable of carrying significant axial loads. The grooves are narrow and with sharp corners, creating high stress raisers, especially on the shafts. Snap rings are acceptable on standard commercial assemblies. On custom designed assemblies snap rings may be used in locations with low stresses and with NCC approval.

4.3.6.34 Washers. Every threaded connection of a built-up assembly must have a hardened steel washer under the turned element – head or nut. Additionally, mounting connections at slotted feet or flanges of housings must include a thick steel cover plate with a drilled hole to match the fastener diameter and overall dimensions to completely cover the slot.

4.3.6.35 Setscrews. Setscrews are permitted only to serve as locking devices between the threads of mating components (such as load hook and nut), mounted bearings supporting only the weight of mechanical components (such as squaring shafts), and on secondary non-load bearing assemblies (such a limit switch shafts).

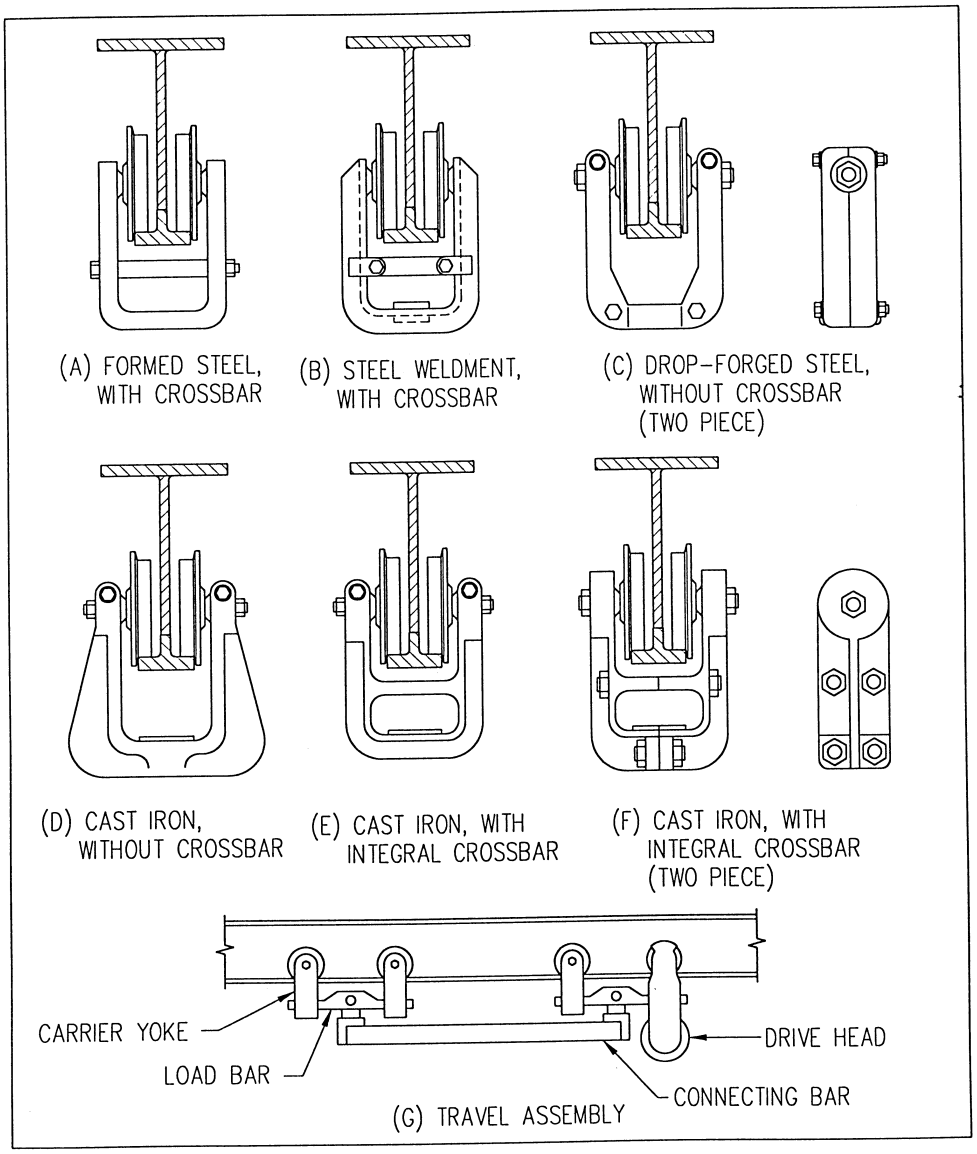

FIGURE 22
CARRIER YOKES AND TRAVEL ASSEMBLY

In the latter case and similar situations where the rotational position of the shaft is critical, the setscrew tip should seat in a drilled pocket or flat machined on the shaft to permanently maintain the adjustment. The setscrews should be of the headless type and those fitted into a pocket should have a full-dog or half-dog point, those bearing on a flat should have a cup point.

4.3.6.36 Brake Wheels. Brake wheels are not integral components of shoe brakes and can be obtained as a separate item. The most common brake wheel material is gray cast iron, but ductile cast iron, cast steel, steel weldment, and cast steel with carburized rim are also available. The brake wheel hub has a keyway and is bored for a press fit on the shaft; alternatively, the hub is deleted and the web is bored and drilled for bolting to a shaft coupling hub. The rim must be wider than the shoe lining (to avoid wearing a groove in the lining) and must have material characteristics that do not change the condition of the surface with wear. Rims with glazed surfaces reduce the friction coefficient with the lining and require remachining to return the brake to its original torque rating. The recommended materials for brake wheels are the standard gray cast iron for general purpose service and ductile cast iron or steel for certain critical applications.

4.3.6.37 Carrier Yokes. Any of the carrier yoke designs depicted in figure 22 are acceptable for any application. Designs (d), (e), and (f) are either ductile or malleable cast iron type. Designs (e) and (f) may include side guide rollers, in which case the wheels are flangeless. All wheel axles are fixed (non-rotating) and some wheel bearings are retained with snap rings. The bottom of the carrier yoke has a seat for a swivel washer to equalize the wheel loads and allow the wheels to turn on curves.

4.3.6.38 Drive Heads. Drive heads are arranged similar to the carrier yokes but are equipped with an electric motor and a set of gears to drive the wheels. NCC policy is to require both wheels to be driven to ensure adequate traction under all conditions. The installation of a drive head is made at either or both of the outboard ends of the load bars – in place of the outboard carrier yokes shown in figure 22. The travel assembly must have at least one quarter of all wheels driven.

4.3.6.39 Load Bars and Connecting Bars. The load bars and connecting bars are standard commercial items made by the manufacturers of the carrier yokes and drive heads to match their products. These items should be used in all applications unless particular conditions prevent that. If custom made load bars on connecting bars are used in place of the standard items, they must be made of steel and designed with safety factors required for mechanical components.

4.3.6.40 Hydraulic Components and Assemblies. All hydraulic components and assemblies are standard commercial products designed in accordance with industry standards for specific operating pressures. The housings are in most cases gray cast iron; internal moving parts are steel. NCC policy is to require built-up hydraulic circuits/systems to use corrosion resistant steel for all tubing, pipes, fittings, and reservoirs. Whenever the option is available, fluid conductor joints should be made with flat face o-ring seals. Where the size of fluid conductors precludes o-ring seals, the joints should be made with 37-degree flare, 3-piece connections.

4.3.6.41 Painting and Corrosion Protection. Purchased mechanical assemblies and components are usually painted by their manufacturers. Whenever a standard option for higher quality or grade of paint is available, it should be obtained. There is rarely any justification for repainting such items, but if required, the original paint need not be removed, but its surface must be cleaned to obtain a good bonding with the top coat that is to be applied. Any parts of joints/seams on these items that might be damaged, penetrated, or degraded by cleaning must be properly shielded. There is no particular requirement for the applied top coat, but it must be compatible for bonding with the original paint.

The following surfaces and materials are not to be painted:

a) Working surfaces of wire rope drums, sheaves, rails and patented track, wheel and roller treads, etc.

b) Wire ropes, hooks, and hook nuts. (These items are periodically lubricated or have a preservative applied.)

c) Threaded portions of components intended for making adjustments or changing settings.

d) Contact surfaces underneath assembly and mounting fasteners (except for a primer coating).

e) Lubrication fittings and equipment data and name plates.

f) Corrosion resistant metals and plating; such as stainless steel, copper alloys (bronze), aluminum, and chrome or nickel plating.

4.4 Mechanical-Electrical. All mechanical-electrical components are standard commercial items, designed and built to industry standards. They are fully described in catalogs and advertising literature. Typically they are among the most critical components of any drive, such as brakes and clutches.

4.4.1 Shoe Brakes. Crane shoe brakes have two external shoes, with riveted or bonded friction linings, that act on the outside diameter of the brake wheel. The brakes are of a “fail safe” design, being spring-set and electrically released. The activating spring force is multiplied and applied equally to the two shoes through intermediate linkage. The brakes are released either by a DC magnet or an AC solenoid which acts against and overpowers the spring. In the released position, the linkage is held open by a secondary spring to keep the brake shoes from dragging on the brake wheel. The shoe brakes are available in standard sizes and torque ratings. The compression of the activating spring is adjustable to 50 percent of its maximum rating. Brakes are available with self adjusting features to compensate for friction lining wear. The adjustment automatically maintains the air gap (the applied torque) within the desired range; however, the brake condition should be checked periodically. The self adjusting brake feature should not be included on brakes exposed to environments where freezing or contamination may cause it to malfunction.

The brakes are base mounted, and are normally installed with the base in a horizontal position to act on a horizontal brake wheel axis. With minor modifications, the base can be turned to a vertical position with the brake wheel axis remaining horizontal. More extensive modifications are required to turn the

brake on its side for a vertical drum axis because the linkage is too loose to keep the shoes from dragging or applying unevenly on the brake wheel. The required modifications for this brake orientation include replacement of the plain linkage pins with a type that has a rolling ball on the bottom end and a machined hard flat plate to support the linkage pins and thus maintain the linkage and shoes in proper alignment. Whenever possible, the drum shaft axes should be horizontal to avoid such modifications.

Manual release mechanisms are available on all shoe brakes and should always be provided on cranes. The mechanism must be of the maintained force type – that is, the brake may be in the released position only while the manual force is being applied. Locking type of release mechanism, such as over-the-center or screw type are prohibited. On hoists, the manual release mechanism must be able to modulate the brake release force to permit the lowering of a suspended load by gravity in a positive, controlled manner.

4.4.1.1 Combination Hydraulic Shoe Brakes. Mechanical-electrical shoe brakes can be equipped with a hydraulic activating system. With this arrangement, the brake operating sequence is: spring-applied, electrically released, hydraulically re-applied (by foot pedal). These brakes are used on travel drives which have a drift (coasting) mode. When the brake is electrically released and the crane is coasting, the operator can modulate the speed or the deceleration rate by the force on the brake foot pedal. The need for routing the hydraulic lines between the operator’s cab and the brake restricts these brakes to crane structures on which the operator's cab is mounted – the most common being the bridge of an OET crane (or the trolley, if the cab is mounted on it) and machinery deck of a portal crane. (Because of the complexity of this brake design, NCC recommends a separate hydraulic shoe brake for these applications.)

4.4.1.2 Electro-Hydraulic Shoe Brakes. Electrically activated shoe brakes can also be applied through an intermediate hydraulic system. The elements of the system are the electric circuit, electric motor driving a hydraulic pump, hydraulic cylinder, and mechanical linkage with the brake shoes. These brakes are used most often on the travel drives of portal and container cranes. The electric circuitry from the operator’s cab is routed through slip rings or a festoon system to the brake assembly. The electric activating system does not provide modulating control but the relatively gradual application of the full brake torque softens the stops.

4.4.2 Disc Brakes. Disc brakes use several alternating stationary and rotating discs (pressure plates and friction discs) to develop a high friction (braking) force from the pressure of a number of symmetrically arranged coil springs. All discs are free to slide axially – the stationary set inside the housing (usually on pins) and the rotating set on the spline of the drive shaft. Being very compact and enclosed, disc brakes have less thermal capacity than the shoe brakes. Design details of the standard commercial disc brakes have been refined so that there is virtually no physical contact and heat generation between discs when the brake is in the released position. (Oil immersed designs are available for increased thermal capacity, but should be avoided because of the additional complexity.) The most common activation is by AC solenoid, but direct acting DC magnet designs are available. The brakes are completely enclosed by cylindrical, flange connected, housings. The housings may be cast aluminum, ductile cast iron, or cast steel. The brake torque can be adjusted

down to 50 percent of the maximum rating. In some cases, such adjustment may involve replacement of the coil springs. Disc brakes are provided with manual release levers and indicators of brake friction disc wear.

Disc brakes are available as separate units or may be integral with electric motors. The shaft connections usually are made with keyed shaft-sleeve fits. Weathertight and “washdown” designs are available for outdoor installations.

4.4.3 Caliper Disc Brakes. As used on cranes, caliper disc brakes apply their braking force at the periphery of a large disc or flange (approximately same diameter as the wire rope drum). The flange rotates through a notch in the housing of the brake assembly which presses opposed friction pads to both sides of the flange. The clamping motion of the pads may be double-acting (when the opposed pads are mounted on two individual pistons) or single-acting (when an advancing piston acts on one side of the flange and the housing wall on the other). For double-acting pistons, the housing is fixed and the same force is applied to the opposed pistons; for single-acting pistons, the housing is free to slide and equalize the force of the piston.

The caliper disc brakes are spring-applied by packs of Belleville springs and released by a DC coil, AC pancake motor and linkage, or hydraulic pressure. A single brake housing may carry two, four, or six opposed clamping pads, and several housings may be mounted on the hoist foundation to clamp the brake flange. Screw type manual release mechanisms are available.

4.4.3.1 Brake Flanges. Flanges of caliper disc brakes should be demountable (two piece) bolted steel rings or permanent drum components with replaceable wear segments. The contact surfaces for the brake pads must be kept clean, either by periodic application of the brakes when the drum is rotating or by continuous light scrubbing with a non-abrasive material.

4.4.4 Band Brakes. Band (or strap) brakes are available as integral components of high-torque/low speed hydraulic motors. They are installed on the outer diameter of the hydraulic motor housing and are well suited for hoist drives. The brakes are spring-applied and hydraulically released by means of servo-valves integrated into the electrical control system.

Band brake design is sensitive to the details of the activating lever and the band end connections. The “simple” brake is considered uni-directional – being much more effective in one direction than in the other. The “de-energizing” brake is equally effective in both directions, although it requires a larger activating force than the simple brake in its active direction. The “energizing” brake is uni-directional and develops a large braking force with a light activating force; in fact, it can easily self-lock if the original lining is replaced with a material that has a slightly higher friction coefficient. Brake activation may be pneumatic, electric, or hydraulic. Custom designed band brakes should be carefully analyzed to ensure smooth and stable braking force.

4.4.5 Clutches. Clutches are disc brakes, as described above in paragraph 4.4.2, except that the housing is mounted on one of the rotating shafts. Clutches are used on built-up hoist and travel drives to couple the micro-drive to the main drive. In this application, the clutch is de-energized (spring-released) when the drive is operating in its normal mode, and electrically-applied (against the

springs) when the drive is operating in the micro-drive mode. The arrangement is "fail safe" due to the electric circuitry that sets the main brakes in case of clutch disengagement due to loss of power.

4.4.5.1 Toothed (Clutch) Couplings. Micro-drive connection to the main drive may also be a toothed coupling with interlocking radial teeth on its two clutch plates. The height of the teeth is approximately 1/16 inch and their sides are tapered for easier engagement. The coupling tooth engagement is enabled only when the main drive brakes are set. A jogging feature is provided to shift the micro-drive clutch plate to position its teeth for alignment with the main drive clutch plate. A limit switch is required to sense the fully engaged position of the clutch and permit the energization of the micro-drive and release of the main drive brakes. Because of the sensitivity of full engagement of the coupling teeth to the short operating stroke, NCC policy is to prohibit their use on new cranes.

4.4.6 Gear Motors. Gear motors (or motor reducers) combine the electric motor and gear reducer into a single, compact base or flange mounted unit. The electric motor may be of any type, but the most common is the 1800 RPM AC squirrel cage. The gear reducer selections include parallel shaft (in-line or offset) right angle bevel gear, worm gear, planetary, cycloidal, or combinations of these types. The first gear (pinion) of the gear reducer is normally pressed and keyed to the motor shaft. Gear motor applications are limited to low-power drives – such as travel and rotate drives, and various operating mechanisms.

4.4.7 Painting and Corrosion Protection. Purchased mechanical-electrical components are usually painted by their manufacturers. They should be painted for corrosion protection in the same manner as the mechanical components. See paragraph 4.3.6.41 for specific requirements.

4.5 Electrical. All electrical components are standard commercial items – designed, manufactured, and rated according to the applicable industry standards. Only those components that comply with the requirements of the National Electrical Manufacturers Association (NEMA) Industrial Control Systems (ICS) standards and of Underwriters Laboratories (UL) documents, or those of other established nationally or internationally recognized approving organizations, may be used on Navy cranes. Such electrical components are described in detail in the manufacturers' catalogs and advertising literature. Furthermore, installation of electrical conductors and equipment must comply with the National Electrical Code; for installations not covered by the code, it is to be complied with to the greatest extent practicable.

Both direct current (DC) and alternating current (AC) electrical systems are utilized on Navy cranes. DC power is normally available at the older Navy shore facilities and is often used on larger cranes with on-board diesel engine generated power. Newer Navy shore facilities and smaller cranes, especially underrunning and cantilever types, are AC powered. Some electrical components may be used in either system; however, their DC and AC rating must be noted because they may be significantly different.

4.5.1 Crane Electrical Systems. Electrical systems on cranes are classified according to their basic functions – drive power, control, and ancillary service. The particular drive motor types, in combination with the appropriate controls, define the crane drive systems and their operating characteristics.

For DC systems, the drive power equipment normally operates on 240 or 500 volts (VDC) and the control equipment is limited to 240 VDC. Also, 12 or 24 VDC power would be available from the diesel engine starting batteries on-board portal and floating cranes.

For AC systems, the drive power equipment and control equipment are almost always 480 volts (VAC) and 120 VAC, respectively.

The voltage of the various ancillary systems is determined by the ratings of the available equipment for the required service and the power that is most readily available from the primary power source; typically it is 240 VDC or 120, 208, or 240 VAC. The power for ancillary systems may be obtained either by means of step-down transformers or dedicated generators or alternators.

4.5.2 DC Drive Motors. DC motors are categorized according to their armature and field winding arrangements – series-wound, shunt-wound, and compound-wound. Each has its unique operating characteristics and all three have fitting applications on cranes.

4.5.2.1 Series-Wound Motor Drives. Series-wound motors have the armature and field winding connected in series. The operating speed of these motors is inversely proportional to the imposed load. This characteristic makes them desirable in applications such as hoist drives (where a lightly loaded hook can be raised quickly) and on some travel drives (where a high starting torque is required to overcome a large inertia). However, to limit the maximum speed in the first one or two hoisting speed points, it is necessary to install a resistance in parallel with the armature. This feature, known as armature shunting, increases the field strength to a higher level than would be obtained with the armature current alone.

Another operating characteristic of series-wound motor drives is the excessive speed of the drive caused by overhauling loads, due either to the lowering hook load on a hoist or a tail wind on an outdoor traveling crane. On hoist drives, overhauling during lowering is avoided by circuitry which automatically reconfigures motor armature and field connections into a shunt-wound (constant-speed) design. On travel drives, the overhauling condition is less severe and develops gradually, so that it is readily controlled by the operator.

The controls for series-wound motors are of the “constant potential” type, usually with five speed points in each direction. These controls are referred to as constant potential because the line-to-line voltage remains unchanged during motor operation. The controls apply a potential (voltage) to the motor armature at each speed point by shunting out preset segments of resistance in series with the motor. However, the motor speed is also related to field strength which is dependent on the load (due to voltage drop across the series resistance). A weaker field results in faster motor speed. When high values of series resistance are used to restrict motor speed in slower speed points, a heavily loaded motion may not begin to move until the control is placed into second or third speed point.

Series-wound motors have a unique application on travel drives of cranes that must negotiate curves. When individual motors in same positions (opposite each other) on the two rails are connected in series, they develop the same torque but

allow the speeds on the inner and outer rails to conform to the severity of the curve and drive the crane without skidding on the rails.

4.5.2.2 Shunt-Wound Motor Drives. Shunt-wound motors have the armature and field winding connected independently. The operating speed of these motors is virtually insensitive to the imposed load due to the constant field current. Their speed is proportional to the voltage that is applied to the armature, while the field voltage is fixed. These motors are desirable on drives whose motion needs to be precisely controlled regardless of the load on them, or when overhauling cannot be tolerated.

In an adjustable voltage system, the line-to-line voltage is varied between zero volts and the motor's rated voltage, in both positive and negative polarity. This is accomplished by varying the output of the DC power supply. Older drives adjust the armature voltage (speed) by means of fixed speed points (usually five in number) selected by activation (operation) of electro-mechanical field relays in the drive's generator field circuit or by manual operation of a rheostat in the drive's generator field circuit. Newer drives use electronic controls to provide either fixed speed points or variable speed throughout the full operating range.

In DC drives where a single, relatively constant, speed is required – such as a shore powered motor-generator set or a micro-drive – a constant potential is applied to the armature. The constant speed characteristic of the motors is similar to that of the single speed AC "squirrel cage" induction motor, and their higher cost and complexity can only be justified by the unavailability of an AC power source.

4.5.2.3 Compound-Wound Motor Drives. Compound-wound motors incorporate two field windings – one in series with the armature and one independent of the armature. These motors exhibit some of the characteristics of both the series and shunt-wound motors. The degree to which the compound-wound motor resembles either of the other motors is determined by the strength of the series winding relative to the shunt winding. Speed is controlled by varying the applied voltage to the armature and the resultant strength of the series field.

Compound-wound motors may be used for rotate drives on portal and floating cranes. In these applications they provide high starting torque, smooth transition between speed points, and control the overhauling effects due to wind or list and trim. The relative strengths of the field winding should be selected in consultation with NCC.

4.5.3 DC Drive Electrical Braking/Speed Limiting. Electrical (frictionless) braking for speed control of DC drives is provided either by dynamic or regenerative braking circuits. In dynamic braking, resistors are used to absorb the overhauling energy. The dynamic braking is used when the power supply is obtained from rectifiers or diesel-generator sets. In regenerative braking, the overhauling energy is transferred to the electric power utility.

4.5.3.1 Plugging. Plugging is a short-duration form of braking to bring the drive to a stop. It is a condition where the motor armature continues to rotate in the previous direction while electrically the direction of the current flow has been reversed. The level of the sudden, electrically imposed, counter-torque is determined by current limiting resistance inserted in series with the armature. Plugging is not used on drives with shunt-wound motors.

4.5.3.2 Emergency Dynamic Braking. Emergency control of the hoist load is provided by electrical re-circuiting of the drive motor into a self-excited generator driven by the descending hook load. The emergency dynamic braking circuits are automatically established whenever the controls are in the OFF position. The load cannot be brought to a complete stop, but its terminal velocity can be limited.

For drives with series-wound motors, the emergency dynamic braking circuit establishes a loop with the armature, field, and resistance connected in series. The terminal velocity is determined by the amount of the series resistance, and is normally selected for a maximum terminal velocity of 40 percent of the rated hoisting speed with the rated load on the hook.

For drives with shunt-wound motors, the circuit establishes a loop with the armature, field, and resistance connected in parallel. The terminal velocity is proportional to the ratio of the field voltage to the armature voltage, and these voltages are normally selected to limit the terminal velocity to a maximum of 40 percent of the rated hoisting speed with rated load on the hook.

4.5.3.3 Speed Limiting. Since the speed of series-wound motors is inversely proportional to the torque, the motor speed will increase to a dangerous level if its load is removed. The loss of motor load may be caused by a broken wire rope or a sheared shaft. Series-wound drive motors that are unattended or are not under the control of a qualified operator require a speed-limiting device (such as a centrifugal switch) in the control circuit.

In the case of shunt-wound and compound-wound motors, their shunt fields inherently limit their speeds under unloaded conditions.

4.5.4 AC Drive Motors. Two categories of AC motors are used widely on cranes – “squirrel cage” and wound-rotor. Being induction motors, they are simpler in design and require less maintenance than the DC motors. Although their operational characteristics differ from those of DC motors, their controls and additional equipment can be arranged to accommodate the requirements of virtually all crane drives.

4.5.4.1 Squirrel Cage Motor Drives. Squirrel cage motors have a primary winding (stator), which is connected to the power source, and a rotor, which carries the induced secondary current. They are inherently constant-speed motors; the speed being determined by the power supply frequency and the number of pole pairs. The maximum speed of an unloaded motor is the synchronous speed, and as load is applied, the speed is reduced only slightly. The precise relationship between the speed and load (torque) varies with the design details of the motor design. The speed of these motors can be changed significantly only by means of complex electronic controls. The motors are available in single speed or two-speed construction. Two-speed motors have two separate stator windings, one for each operating speed. The most common speed ratio is 3:1, but 2:1 and 4:1 are also available.

NEMA Design B motors lose only 5 percent of their synchronous speed when rated load (torque) is applied. These motors are well suited for travel drives of OET and underrunning cranes. NEMA Design D motors are somewhat load-sensitive, with a speed decrease of up to 13 percent from no load to rated load torque. They have a very high starting torque and relatively low starting current, and these characteristics make them well suited for hoist drives. The inherent regenerative braking of either motor design maintains their speed at virtually the same level, whether driving or being overhauled.

Speed control of squirrel cage motors is obtained by energizing either one of the windings of a two-speed motor, or by applying variable (adjustable) frequency power to a single winding motor. In the two-speed motors, the motor speed corresponds to the stator winding that is energized. In the case of adjustable frequency control, the motor rotates at speed that is proportional to the frequency of the AC power produced by the controller. (The controller converts the constant-frequency AC power source into DC power and then back into AC power at an adjusted frequency.) The adjustment of the frequency of the applied AC power is designed to be proportional to the movement of the operator's master switch or push button. Squirrel cage motors with adjustable frequency controls are widely used on standard commercial crane drives.

4.5.4.2 Wound-Rotor Motor Drives. Unlike the squirrel cage motors, wound-rotor motors have their rotors connected electrically (via slip rings) to external (secondary) variable resistors. They have only one primary (stator) winding. The secondary resistors of the rotor circuit serve to determine the motor speed and other performance characteristics.

The insertion of variable secondary resistance in the rotor circuit provides a wide range of speed and torque control. These motors are normally started with the maximum secondary resistance in the rotor circuit, and brought up to the desired high speed by gradually removing (shunting out) segments of the resistors. Smooth stopping of the motors can be obtained by reversing the process; that is, reinserting segments of the resistors. In hoist applications they are subject to overhauling in some speed points, and there the torque due to the hook load must be controlled by the addition of an eddy-current brake or a mechanical (friction) load brake.

Mechanical load brakes (often referred to as "Weston type") are normally used as an internal component of standard commercial hoist gear reducers. Although they are entirely mechanical in nature, they must be discussed in this section because they are integral with the electric speed control system and exert a major influence on the behavior of the hoist in the lowering direction. The principle behind their operation is to cause friction elements (plates on a shaft thread or wedges on cams) to wedge and stop the downward motion of the hoist drive. To lower, the drive motor rotates in the lowering direction and unwedges the friction elements just enough to allow them to slip on each other. (Because of the heat generated by the slipping friction, these brakes can only be used in moderate service and limited lift height.) To raise, the friction elements remain wedged but the entire brake assembly is mechanically bypassed, with the motor driving through an undirectional ratchet-and-pawl assembly. Mechanical load brakes are never used as independent external units, but a few manufacturers offer them as options in their gear reducers.

4.5.5 AC Drives Electrical Braking/Speed Modulating. The electrical (frictionless) braking for speed control of AC drives is provided by dynamic braking, inherent regenerative braking, or eddy-current braking. Regenerative and dynamic modes of braking transfer the overhauling energy to the electric power utility or resistors, respectively. Eddy-current braking involves an additional electromotive rotating device which applies a retarding torque to the drive motor or against the overhauling torque.

4.5.5.1 Plugging. Plugging, as described in paragraph 4.5.3.1 above, is used on travel drives with wound-rotor motors and on hoist drives with squirrel cage NEMA Design D motors; however, it is prohibited on travel drives with a squirrel cage NEMA Design B motors due to the harshness of the resulting torque reversal. NCC policy is to require electro-mechanical devices to preclude unintentional plugging.

4.5.5.2 Emergency Dynamic Braking. Emergency control of the hoist load by means of dynamic braking, as described in paragraph 4.5.3.2 above, is used on hoist drives with wound-rotor motors. However, since the AC motors cannot be re-circuited into a generator (alternator) configuration, an eddy-current brake is used to provide emergency dynamic braking. If the speed control eddy-current brake is to be used in this secondary function, an alternator must be provided to energize it when all electrical power is lost. In either case, the voltage across the eddy-current brake is established for a maximum terminal velocity of 40 percent of the rated hoisting speed with rated load on the hook.

4.5.5.3 Reduced Voltage Operating Modes. In many crane applications, the sudden changes in the drive torque of squirrel cage motors are detrimental to crane operations. In order to soften the behavior of such drives, the applied voltage is momentarily reduced when starting and during transitions between speed points. The voltage is reduced either by momentarily inserting resistance in series with the motor winding or by electronically reducing the voltage being applied to the motor. In the latter case, the rates (ramping) of voltage reduction and increase are adjustable. The selected ramping values are set on the control equipment and are automatically applied during crane operation.

4.5.6 Ancillary Systems. Ancillary equipment on portal cranes consists of lighting, heating, ventilation, air conditioning, pumps, compressors, battery chargers, communications equipment, and portable tools plugged into receptacles. Most of this equipment operates on voltages lower than 480 VAC and is supplied from panelboards fed from a step-down transformer. Use of a dedicated panelboard for equipment heater and battery charger circuits provides a convenient way to assure that this equipment is energized when the crane is not operational. It would also be appropriate for aircraft warning lights to be supplied from this panelboard. Receptacles are ground-fault circuit-interrupter protected type or are supplied from circuit breakers providing ground-fault circuit-interrupter protection for personnel.

On bridge cranes, ancillary equipment generally consists of lighting and air conditioning. A step-down transformer and a panelboard are used for this equipment.

4.5.7 Facility Power Sources. All new Navy facilities provide 480 VAC power in buildings and at dockside outlets. Virtually all OET, underrunning, and cantilever cranes have drives designed to utilize this power source. Some gantry

and semi-gantry cranes may also use the facility power, but many use on-board diesel engine-generator sets as their primary power source.

Older Navy facilities may have 240 VDC or 500 VDC as their primary power source. New cranes installed in such facilities should be equipped with drives designed for that power source.

4.5.7.1 Shore Power Operation. Waterside facilities normally have electrical outlets for several varieties of power. Portal, floating, and container cranes are normally designed with back-up capability to operate off shore power in case of loss of their on-board diesel engine-generator power source. Crane electrical systems of these cranes are configured to permit a quick transfer to shore power. Additionally, shore power is required to energize cranes' ancillary systems, such as lights and heaters, during prolonged periods of inactivity; for AC systems, this power may have to be provided at a voltage lower than 480 volts, depending upon the design of the crane.

Shore power connections are made near ground level by means of standard commercial hardware. When on shore power, crane travel capability is severely restricted.

4.5.8 Main Diesel Engine-Generator Sets. The primary power for Navy portal, floating, and container cranes is provided by on-board diesel engine-generator sets. These sets are normally standard commercial combinations of components, all mounted on a common base. A critical component of these sets is the coupling between the diesel engine and the generator. The coupling determines the natural torsional frequency of the set, and must perform equally well for long periods under both full load and no load. It is important that the assembler of the set consider the long period of idling at no load, which is uncommon in commercial practice but is a normal condition in Navy operations.

4.5.8.1 Diesel Engines. Diesel engines are standard products of established manufacturers. They are available in two-stroke-cycle and four-stroke-cycle designs. The two designs are comparable in all respects and are equally acceptable for use on Navy cranes. They may be either naturally aspirated or supercharged. Although the naturally aspirated engines produce somewhat less power per pound of engine weight than the supercharged models, they are recommended in order to avoid the added complexity and maintenance requirements of the superchargers.

The starting systems are either electric (with on-board batteries) or pneumatic. Pneumatic systems require a diesel engine or electric motor driven compressor and an accumulator of sufficient volume to provide several engine starting sequences. Both systems are satisfactory; however, the electric systems are preferred where ambient temperature and humidity conditions may cause condensation and freezing of water in the pneumatic system.

The standard operating speed of modern diesel engine-generator sets is 1800 revolutions per minute (RPM). Maintenance of relatively constant speed (for the 60 Hertz electrical frequency) at fluctuating loads is important. Although diesel engines are inherently constant-speed machines, speed loss (droop) occurs with the sudden application of load. A speed governor, which senses the droop and responds by increasing the rate of fuel injection is required to maintain the

speed within predetermined limits. Mechanical, hydraulic, and electronic types of governors are available, and all are found on cranes in the Navy inventory. Modern diesel engines are normally equipped with electronic speed governors and fuel controls which ensure clean (complete) combustion at light and idling loads while maintaining constant speed. NCC policy is to specify electronic speed and fuel controls for all new crane procurements. When such electronic controls are not provided, diesel engine-electric generator sets usually require a resistor load bank to provide an artificial load on the diesel engine to ensure complete combustion and clean exhaust.

4.5.8.2 Generators. Generators of the main diesel engine-generator sets on portal, floating, and container cranes serve to provide DC or AC power to the drive control systems and DC power to the drive motors.

For crane applications, the DC generators are limited to two types – flat compound-wound for constant potential control systems, and separately excited shunt-wound for adjustable voltage control systems. Flat compound-wound generators have the same terminal voltage with no load and with full load on the generator (which is defined as the rated voltage); and slightly higher than the rated voltage at intermediate loads. Shunt-wound generators produce their rated voltage only at full field strength and with no load. The terminal voltage drops slightly with increasing load on the generator; but, for a given load, the terminal voltage decreases significantly when the field is weakened.

AC generators (alternators) are used in combination with straight rectifiers or with controlled rectifiers (thyristors) to produce DC power. The straight rectifiers are employed for constant potential drives, and thyristors for adjustable voltage systems. AC generator designs are selected to deliver the rated voltage at 60 Hertz when driven at the rated speed of the diesel engine.

4.5.8.3 Auxiliary Generators. The auxiliary generators are driven directly by the diesel engines, usually by means of multiple V-belts. Their function is to provide AC power on cranes powered by DC main generators. The auxiliary generators are sized for the total electrical load of the ancillary equipment while the main diesel engine-generator is running. They are normally mounted in “piggy-back” fashion on or beside the main generator.

4.5.8.4 Mounting and Installation. The base of the diesel engine-generator set is a rigid structure, mounted to the crane structure through intervening vibration isolators. The set location must ensure an adequate flow of cooling air and a slight negative pressure with respect to the adjoining spaces. The exhaust system should be entirely of stainless steel and must include a spark arresting muffler and a bellows type duct section to compensate for expansion/contraction of the exhaust duct between its anchor points. On newer portal cranes, the fuel system is arranged to facilitate refueling from ground level. On floating cranes, the diesel engine is fueled from a “day tank” on the crane; and the main tank is installed in the barge.

4.5.8.5 Instrumentation. The mandatory instrumentation includes the engine speed (RPM) tachometer, coolant temperature gauge, and the lubricating oil pressure gauge. The tachometer and gauges must be installed in the operator’s cab and on the base of the diesel engine-generator set. Various additional items of the instrumentation are available from the diesel engine and the generator manufacturers, and they may be provided as required by the operational environment.

Additionally, an hour meter must be provided to continuously register the hours of engine operation. The information is used for performing prescribed maintenance and inspections.

4.5.8.6 Alarm and Shutdown Systems. Audible and visual alarms are required in the operator's cab to signal when the engine speed, coolant temperature, or lubricant pressure enter the final 10 percent of their safe operating range, as specified by the diesel engine manufacturer. If the limit of any of these safe operating ranges is violated, then the engine's controls must automatically shut it down.

4.5.9 Auxiliary Diesel Engine-Generator Sets. The auxiliary diesel engine-generator sets are independent of the main sets. Their function is to provide limited power on the crane when the main set is not running. Depending on the crane electrical system design, they may be AC or DC units. They are sized to power the ancillary equipment and additional specific loads such as a hydraulic power unit, an air compressor of main diesel engine starting system, or the charging circuit of its own batteries.

These sets are standard commercial products. They are mounted in the same manner, and fueled from the same source, as the main diesel engine-generator sets. The exhaust should be completely separated from that of the main set. On floating cranes, the auxiliary diesel engine-generator set is installed in the barge.

4.5.9.1 Instrumentation. Instrumentation is normally limited to the engine speed (RPM) tachometer, coolant temperature gauge, lubricating oil pressure gauge, and hour meter – all mounted on the diesel engine-generator set. Alarms and shutdown systems are usually omitted.

4.5.10 Motor-Generator Sets. Motor generator sets are used for drives with electro-mechanical adjustable voltage control of shunt-wound DC motors.

4.5.10.1 Motors. Depending upon the source of power available, the motor of the motor-generator set could be either an AC squirrel cage motor or a DC shunt-wound motor. Both types of motors have the constant speed characteristic needed for this application.

4.5.10.2 Generators. The generators used are separately excited shunt-wound type. The output voltage of the generator is varied by changing its field strength. Field relays shunt out or add in various segments of resistance in series with the generator field; the less resistance there is in the field circuit, the higher the output voltage is. Alternatively, a manually operated rheostat could be used to vary the resistance in series with the generator field. Loop voltage, and therefore drive motor speed, is changed proportionally to generator field strength. The resistors in the field circuit are selected to provide evenly spaced speed points; in the fifth speed point, all resistance is removed from the field circuit. For a hoist motor, the resistance in series with the field is different in each speed point for hoisting and lowering directions. Polarity of the generator output voltage is reversed by reversing field polarity.

4.5.10.3 Mounting. Motor-generator sets are mounted on rigid independent foundations fabricated from structural steel. They are secured with SAE Grade 5 fasteners or ASTM A325 bolts with matching nuts and hardened steel washers.

4.5.11 Motors. DC motors can be categorized as either industrial or mill duty type; all AC motors are industrial type.

4.5.11.1 Mill Motors. AISE Standard No. 1 defines the design criteria, capabilities, and dimensions of DC mill motors.

4.5.11.2 Industrial Motors. NEMA Standards Publication No. MG-1 provides guidance for the selection and application of motors. It addresses ratings, terminal markings, dimensions, and testing of AC and DC motors. It also prescribes minimum requirements for information, which must appear on motor nameplates.

4.5.11.3 Nameplate Data. Both the National Electrical Code (NEC) and NEMA Standards Publication No. MG-1 require that a motor's nameplate include:

a) Manufacturer's name;

b) Motor's rated voltage and current (current for each speed if a two speed squirrel cage AC motor);

c) Frequency and number of phases (for an AC motor);

d) Rated full load speed;

e) Rated temperature rise or the insulation class and rated ambient temperature;

f) Time rating;

g) Rated horsepower;

h) Locked-rotor amperes or locked-rotor kVA indicating code letter and design letter (for a squirrel cage AC motor);

i) Secondary voltage and full load current (for a wound-rotor AC motor);

j) Winding type (for a DC motor).

There are additional requirements in NEMA Standards Publication No. MG-1 (MG 1-10.66.3 for DC motors/MG 1-10.40.1 for AC motors), beyond those of NEC Section 430-7, for information to be provided on a motor nameplate.

To meet NEMA requirements, the following information must be provided for DC motors in addition to that required by the Code:

a) Manufacturer's type and frame designation;

b) Maximum safe speed for series-wound motors and certain compound-wound motors;

c) Maximum ambient temperature;

d) Rated field voltage (or field resistance and rated current) for shunt-wound and compound-wound motors;

e) Power supply designation which is the basis of the rating.

To meet NEMA requirements, the following information must be provided for AC motors in addition to that required by the Code:

a) Manufacturer's type and frame designation;

b) Maximum ambient temperature;

c) NEMA nominal efficiency (except for Design D squirrel cage motors and wound-rotor motors);

d) Service factor (except for wound-rotor motors);

e) NEMA wording regarding overtemperature devices (except for wound-rotor motors).

4.5.11.4 Anti-Condensation Heaters. On newer outdoor cranes, an anti-condensation heater is installed in every generator and drive motor. It is de-energized whenever rotation occurs.

4.5.12 Control Equipment. Control equipment is utilized on a crane for motor operation. Equipment to directly influence the speed and direction of rotation of each drive motor is mounted on the control panel. Examples of such equipment are contactors and relays, electronic conversion units, transformers, protective devices, and terminal blocks. The control panel is mounted in an enclosure. External devices which interface with panel mounted equipment are resistors, limit switches, master switches and pendent pushbutton stations, and safety devices.

On newer outdoor cranes, a thermostatically controlled anti-condensation heater is installed in each control panel enclosure.

4.5.13 Contactors and Relays. Contactors are used for line, directional, and accelerating functions. In a constant potential DC system, the line contactor, when energized, connects the motor branch circuit to one side of the line. The directional contactors are used to connect the motor branch circuit to the other side of the line and are arranged so as to cause current to flow through the motor armature in one direction or in the opposite direction while not changing direction of current flow through the field; this changes the direction of the motor rotation.

A series brake is released when 40 percent or less of full load current flows through the motor branch circuit. The release of a shunt brake is interlocked with the line and directional contactors. The accelerating contactors shunt out or add in various segments of the series resistance, affecting motor speed for a given load. The less resistance there is in the armature circuit, the faster the motor rotates.

A relay is used in the control circuit to ensure that the line-to-line voltage is suitable. It is referred to as a "UV" relay. In addition to its principal function of shutting down the crane if the line-to-line voltage is too

low, it often is interlocked with the other devices to ensure that master switch handles are in the OFF position before the controls can be energized and also to stop all motions in case of a motor overtemperature.

Timed delay relays are commonly used to ensure that the operation of accelerating contactors is sequential. A timed delay relay is connected in the control circuit in parallel with an accelerating contactor's coil and is energized simultaneously. The contacts of the timed delay relay are connected in series with the coil of the accelerating contactor for the next higher speed point and their closing is delayed for a preset length of time. This prevents the accelerating contactor from being energized for that length of time.

4.5.14 Conductors. The selection of conductors, both for size and insulation type, is governed by the National Electrical Code. The application of conductors must comply with the provisions of NEC Table 310-13. This table states the suitability and maximum temperature rating for dry, damp, and/or wet locations. The Table also describes the insulation and outer covering of each type of conductor.

4.5.14.1 Insulation. NCC policy is to require, for interconnecting wiring, stranded copper conductors of any construction complying with NEC Table 310-13, with the following exceptions:

a) Those containing asbestos in the insulation or outer covering are prohibited.

b) Those having a thermoplastic insulation are prohibited for use in DC circuits on outdoor cranes.

c) All conductors insulated with a thermoplastic are required to be designated "/LS", that is low smoke type.

NCC requires that all conductors connected to or routed above resistors have, with the exception of type SA and FEPB, insulation shown on NEC Table 610-14(a) for 257 degrees (Fahrenheit) maximum temperature.

4.5.14.2 Gauges. The size designation of conductors is based upon the American Wire Gauge (AWG), which was formerly known as Brown & Sharpe's (B&S) gauge. With this system unique numbers are assigned to conductors of specific cross-sectional areas; the lower the number, the larger the cross-sectional area. The ratio of the cross-sectional area of any size conductor to the next smaller conductor is 1.261:1. The unit of measurement for cross-sectional area is the circular mil. In the International Systems of Units (SI), cross-sectional area is measured in square millimeters and is conventionally used to designate conductor size.

4.5.15 Raceways. Rigid metal conduit is the preferred raceway for electrical conductors. It is fabricated from steel and protected from corrosion by a zinc coating. For connections to equipment subject to vibration, liquid-tight flexible metal conduit is used. The National Electrical Code addresses the installation of both types of raceway, including conduit, elbows, couplings, bushings, and fittings.

4.5.16 Resistors. There are three constructions for power resistors; namely, wirewound, edgewound, and grid type.

The principal functions of resistors are to control the speed of motors by limiting current flow and to dissipate regenerated energy as heat.

NEMA utilizes Class Numbers to designate the current ratings of resistors. The Class 90 rating is the continuous rating of a resistor. Other Class Numbers used on industrial (non-Navy) cranes are 150, 160, and 170. The current rating of each of these other Class Numbers is based upon the resistor being “on” for 15 seconds and being “off” for 45 seconds, 30 seconds, and 15 seconds, respectively. NEMA ICS 9, Part 2 addresses resistors.

4.5.16.1 Wirewound. Wirewound resistors consist of resistive wire wound on a tubular dielectric. They are used for high resistance/low power applications. Because the wire can break under vibration, NCC customarily does not permit their use in those applications where the other types of resistors are available, that is for segments less than 8 ohms.

4.5.16.2 Edgewound. Edgewound resistors are more substantially constructed than wirewound resistors. A ribbon of stainless steel, rather than a wire, is wound on a tubular dielectric. They have higher power ratings than the wirewound resistors.

4.5.16.3 Grid Type. Grid type resistors are used for high power applications. The resistor elements are stainless steel stampings, either continuous or welded segments, having low resistance/high power ratings. Cast iron grids had been used in the past and may still be found on the older cranes. Although subject to cracking, they did have the advantage of excellent thermal characteristics in that they were slow to heat-up.

Grid type resistors are also used in load banks. A resistor load bank is used to establish a minimum load level for the diesel engine-generator set. A resistor load bank is used to absorb regenerative power from the motors to prevent back-driving of the diesel engine-generator set.

4.5.17 Electronic Voltage Conversion Units. Electronic voltage conversion units are used to change alternating current to simulated direct current. By utilizing thyristors to conduct selectively between the input’s phases, the waveform of the output current is relatively flat, but it does contain ripples. The output voltage is varied by changing the firing rate of the thyristors. This is done in response to a continuous comparison of a feedback signal from a tachometer or encoder with a reference signal from the operator’s master switch or pushbutton so as to maintain a desired speed.

4.5.18 Transformers. Transformers are used primarily to change the voltage of an AC electrical system. However, the coupling effect of the process also provides isolation against undesired influences between sections.

4.5.18.1 Step-Down Transformers. Step-down transformers are used to change the power system voltage, usually 480 VAC, to a lower voltage. For control circuits,

the voltage is generally 120 VAC, single phase. For circuits supplying ancillary equipment, the voltage is either 120, 208, or 240 VAC.

4.5.18.2 Isolation Transformers. Isolation transformers do not generally change the power system voltage. They are designed with a 1:1 turns ratio. Three phase transformers have their primary windings connected in the delta (△) configuration and their secondary windings connected in the wye (**Y**) configuration.

4.5.19 Eddy-Current Brakes. Eddy-current brakes are frequently used with wound-rotor motors in hoisting applications. The eddy-current brake provides a supplemental load on the motor and causes the motor to rotate at a slower speed than it would due only to the load under the hook. The retarding torque is produced by the rotor turning through the magnetic field produced by direct current being applied to the eddy-current brake's stator. The eddy-current brake is usually energized in the first two hoisting speed points and in the first four lowering speed points.

The eddy-current brake is also energized when the controls are in the OFF position. This provides the emergency dynamic braking function. An alternator and rectifier can be outfitted to energize the eddy-current brake if there is a loss of power while the load is being lowered. This also provides the emergency dynamic braking function. In both cases, the voltage applied to the eddy-current brake is selected to limit motor speed to a maximum of 40 percent of rated hoisting speed.

4.5.20 Electrification Systems. Bridge cranes require both runway and bridge-to-trolley electrification systems. The three constructions which are most commonly used are the rigid conductor type, the festooned conductor type, and the cable reel type.

4.5.20.1 Rigid Conductor Systems. The rigid conductor type of electrification system consists, for a runway system, of conductors supported from the building structure and collectors supported from the crane bridge. A bridge-to-trolley system consists of conductors supported from the crane bridge and collectors supported from the trolley.

Conductors fabricated from copper are available with ampacities ranging from 60 to 500 and, depending on ampacity, are available in maximum continuous lengths of 600 to 2,000 feet. Conductors should be continuous, that is having no splices, because it had been found in the past that the splice assemblies were the most troublesome part of the system due to loosening of connectors and corrosion increasing impedance. NCC policy is to require, for all new cranes, that rigid electrification conductors be continuous, that is have no splices or mechanical connections. The conductors are insulated in either rigid PVC housings or flexible neoprene covers, with special covers being available for high and low temperature environments.

Redundant, full capacity, sintered copper-alloy/graphite collectors are to be used. This is to ensure that there are no breaks in the conduction path during crane operation.

For underrunning cranes with trolleys that transfer to another bridge or spur track, interlocking conductors are required.

4.5.20.2 Festooned Conductor Systems. The festooned conductor type of electrification system consists, for a runway system, of a track supported from the building structure. Carriers ride along this track and the conductors, in flat cables, are supported from the carriers; for conductors larger than #2 AWG, round cable is used. The lead carrier is connected to the crane bridge and moves with it. The other carriers are pulled by the lead carrier. When the carriers are brought together, the cables hang down to form loops. As the carriers separate, the cables straighten out. One end of each conductor is terminated in a junction box mounted on the building structure; the other end of each conductor is terminated in a junction box mounted on the crane bridge.

A bridge-to-trolley system consists of a track supported from the crane bridge with the lead carrier being connected to the trolley and the conductors being terminated in junction boxes mounted on the crane bridge and on the trolley.

Use of an I-beam as the track provides for a substantially constructed system with rugged carriers which protect the cables from abrasion, kinking, or excessive twisting. Conductors should be extra-flexible type with ethylene propylene rubber insulation in a neoprene jacketed flat cable; type G or type W portable power cables are used for round cable applications. It is important that the cable loops do not extend low enough to come into contact with any obstructions. For outdoor applications most hardware is available in stainless steel or bronze.

4.5.20.3 Cable Reel Systems. The cable reel type of electrification system consists, for a runway system, of a cable reel supported from the crane bridge. As the crane moves, cable is either payed out or retracted, depending on direction of motion. A trough is used to support the cable. The use of this type of electrification system for bridge-to-trolley applications is infrequent.

4.5.20.4 Collector Ring Assemblies. Portal and floating cranes require collector ring assemblies to carry power between the rotating upperworks and the portal base of the crane or the tub on the barge. The assembly consists of a series of copper alloy rings, stacked vertically around the crane’s center of rotation, with brushes riding on each ring. Normally, the assembly is supported from the rotating portion of the crane and turns with it, and the brushes are fixed on the portal base or tub. NCC policy is to require that spare rings, three of the largest size and two of each other size and construction used, be provided on new cranes.

Silver plated rings are utilized in communications circuits.

A thermostatically controlled anti-condensation heater is installed in the collector ring assembly enclosure.

4.5.21 Control Panel Enclosures. NEMA Standards Publication No. 250 defines and describes various types of enclosures. The most commonly used are Types 1, 4X, and 12.

A Type 1 enclosure is for indoor applications; it protects against contact with the enclosed equipment. Type 1 enclosures are available either

ventilated or nonventilated. Ventilated Type 1 enclosures should be used for constant potential DC controllers to permit the migration of ozone from the enclosure. Otherwise, ozone, generated from the arcing across opening contacts, builds-up and has a highly corrosive effect upon all equipment within the enclosure. A Type 12 enclosure is also for indoor applications; it is nonventilated and protects against dust, falling dirt, and dripping noncorrosive liquids.

A Type 4X enclosure is for indoor or outdoor applications; it is nonventilated, fabricated from corrosion resistant material, and protects against windblown dust and rain and against splashing or hose-directed water. NCC policy is to specify Type 4X enclosures, fabricated from type 304 stainless steel, for outdoor applications.

There are also “explosionproof” and “dust-ignition-proof” types of enclosures (Type 7 and Type 9, respectively) for use in locations classified as hazardous due to the presence of certain gasses or dusts.

4.5.22 Limit Switches. Switches are supplementary devices used to establish the limits for movement of a crane drive. Limit switches are not to be used for positioning a crane, boom, or hoist.

4.5.22.1 Motion/Position Limits (for OET, Gantry, and Semi-Gantry Cranes). On a bridge crane, limit switches are used for the upper and lower travel of the hook. The lower limit switch, a geared limit switch, prevents the hook from touching the floor. This switch also protects against unspooling the wire rope from the drum. Two upper limit switches are used. This is because of how important it is the prevent two-blocking. Two-blocking occurs when the load block comes into contact with the upper block; a catastrophic failure would result from the severing of the wire rope. On newer AC powered cranes the first upper limit switch is the geared limit switch. The back-up upper limit switch is block actuated, utilizing a counter-weighted arm or paddle mechanism. The geared limit switch contacts operate in the control circuit and the direction of motor rotation can be reversed if the switch is actuated. The block actuated limit switch de-energizes a line contactor in the motor branch circuit. If this switch is actuated, the motor cannot be operated in either direction and the crane must be inspected for any damage; the switch must be manually overridden to permit the lowering of the hook.

Bridge and trolley motions on newer bridge cranes can also be limited by the use of switches operating in their respective control circuits. Slow-down switches are often used to reduce the speed at which the bridge or trolley is travelling prior to reaching the point at which motion is interrupted. Travel in the direction away from a limit switch is not affected.

4.5.22.2 Motion/Position Limits (for Portal and Floating Cranes). The limit switch arrangement on a portal or floating crane is more complicated than on a bridge crane because protection must also be afforded against two-blocking caused by the boom being lowered. The NCC arrangement of limit switches, as described hereinafter, prevents the hooks from being raised high enough that the boom, in its normal operating range, could be lowered into a hook block.

The luffing drive has a geared limit switch to stop the motor when the boom goes up to the angle which puts the main hook at its minimum radius, goes

down to the angle which puts the main hook at its maximum radius, or goes down to horizontal. There is also a direct actuated back-up limit switch.

Each hook hoist also has a geared limit switch. It stops the motor when the hook goes down to its lower limit, goes up to its upper limit with the boom in the horizontal position, and goes up to its upper limit with the boom at the angle which puts the main hook at its maximum radius. There is also a back-up limit switch which is either an independent geared limit switch or a block actuated limit switch. The lower limit for a hook hoist on a portal crane is usually set to permit the hook to go to the bottom of a drydock; it would not stop the drive if the hook touched the ground or a pier. The lower limit for a hook hoist on a floating crane is usually set to permit the hook to touch the deck of the barge, but can be reset so that the hook could go into the holds of a ship. Stopping the hook at its upper limit with the boom horizontal prevents two-blocking because the boom can never be lowered below horizontal. The upper limit for a hook with the boom horizontal is automatically bypassed whenever the boom is at an angle which puts the main hook at a radius less than its maximum radius; the upper limit for the hook with the boom at the angle which puts the main hook at its maximum radius is then established as the hook's upper limit. It is safe to do this because the boom is prevented from being lowered beyond the angle which puts the main hook at its maximum radius unless the hook is below its upper limit with the boom horizontal and a keyed bypass switch is used. When a hook hoist's wire ropes are routed parallel to the boom, there is minimal hook movement relative to the boom due to luffing of the boom. Therefore, there would be no need for a switch to establish an upper limit for the hook with the boom at the angle which puts the main hook at its maximum radius. The upper limit established with the boom in the horizontal position will provide an adequate high hook elevation at its maximum radius.

Limit switches are not normally used with the travel or rotate motions of a portal crane or with the rotate motion of a floating crane.

4.5.22.3 Other Portal and Floating Crane Applications. Limit switches are also used on portal and floating cranes equipped with a spud lock to limit the upward and downward movement of the spud and to energize and de-energize lights indicating the engagement or disengagement of the spud. If the spud is not fully retracted, a limit switch operating in the rotate drive control circuitry prevents operation of the drive. Additionally, limit switches are utilized to indicate to the operator the position of the spud, relative to the socket, when they are within close proximity while the upperworks rotates.

Also on portal and floating cranes, limit switches are used with the boom pawl mechanism. They are used to sense the position of the pawl so that its engagement and release can be indicated to the operator and boom lowering is prevented unless the pawl is released.

4.5.22.4 Condition Limits. Other types of switches are used to limit a system operating characteristic. An example of this is the compressor in an air start system for a diesel engine. Pressure switches are used in the controlling of the compressor motor to sense air pressure in the accumulator.

4.5.23 Protective Devices. NCC policy is to require overcurrent protection on cranes as addressed in Parts E and F of Article 610 of the National Electrical Code. Both equipment and conductors must be protected. Protection must be

provided from short circuits and ground faults and from motor overloads. Short circuits are line-to-line faults; ground faults are line-to-ground faults. Overcurrent protection from ground faults is not the same as ground-fault circuit-interrupter protection for personnel. A motor overload is operation of a motor at a current in excess of its nameplate rating which, if continued for a period of time, would cause damage.

Fuses and circuit breakers can both be used for overcurrent protection. Although faster acting, fuses must be replaced once they have performed their function. They can be expensive and difficult to obtain, particularly those intended to protect electronics. Recently, fuse manufacturers have reduced or eliminated the DC rating of various types of fuses. The manufacturer should be contacted before installing new fuses to protect a DC circuit; most manufacturers have service representatives whose job it is to provide this information. It is important that selective coordination be provided between all protective devices from the final overcurrent device protecting a branch circuit back to the circuit breaker protecting the feeder. This ensures that the device closest to a fault would interrupt the current first and that disruption to other branch circuits is minimized. A study consisting of the time-current characteristics curves for all of the devices involved, plotted on a sheet of full-log paper, demonstrates that selective coordination is achieved for a branch circuit.

4.5.23.1 Feeder Protection. On bridge cranes, a circuit breaker is used as the disconnecting means on the crane. It is selected based upon the load it is supplying and is sized to protect the feeders. A fused disconnect switch may also be used for this function. It is fed by the leads from the runway electrification system; the runway electrification system is protected by equipment in the building.

On portal, floating, and container cranes, the feeder supplied by the generator is protected by a circuit breaker. It is selected based upon the load it is supplying. This breaker also protects the generator itself.

4.5.23.2 Motor Branch Circuit Protection. It is required in NEC Section 610-42(a) that motor branch circuits be protected in accordance with NEC Table 430-152. There are exceptions to NEC Section 430-52 which permit ratings or settings exceeding NEC Table 430-152’s maximums so as to accommodate standard ratings of protective devices and motors which have excessive starting currents. Standard ratings for fuses and circuit breakers are listed in NEC Section 240-6. If a circuit breaker is used for this protection, it is required to be an inverse time type; an instantaneous trip breaker is not acceptable. If an inverse time circuit breaker with adjustable setting is used to protect a motor branch circuit, the breaker is required in NEC Section 430-110 to have a rating of at least 115 percent of the motor full load current.

The maximum rating or setting of protective devices is listed in NEC Table 430-152 as a percentage of motor full load current. Full load current is listed in NEC Tables 430-147 and 430-150 for DC and AC motors, respectively. Full load current is required in NEC Section 430-6 to be used, rather than the nameplate amperes of a specific motor, so that the motor can be replaced with another motor, having the same horsepower rating, without necessitating the replacement of overcurrent protective devices.

4.5.23.3 Motor Protection. A crane motor is considered in NEC Section 610-43 to be protected from overload by a properly selected branch circuit overcurrent device. The predecessor document to NEMA Publication No. ICS 8, Part 1, required the use of overload relay(s); now the use of any device which affords protection from overload would be permitted. However, NCC continues to require the use of overload relays.

Unlike for other protective devices, motor nameplate amperes are used to select the heater element in overload relays. This is done for the protection of a specific motor and may necessitate the replacement of the heater elements if that motor is replaced with another motor.

4.5.23.4 Control Circuit Protection. Control circuit conductors are required in NEC Section 610-53 to have overcurrent protection; however, they are considered protected by an overcurrent device having a rating not in excess of 300 percent of the conductors' ampacity.

4.5.23.5 Transformer Protection. Overcurrent protection of transformers is required in NEC Section 450-3(b). The primary of a transformer must be protected by an overcurrent device rated or set at no more than 125 percent of the rated primary current. If the secondary of a transformer is protected by an overcurrent device rated or set at not more than 125 percent of the rated secondary current, the primary overcurrent protection device can be rated or set at no more than 250 percent of the rated primary current. There are exceptions regarding the rating or setting of overcurrent protective devices and, in NEC Section 430-72(c), for motor control circuit transformers. Also, there are specific requirements for certain single-phase transformers in NEC Section 240-3(i). These arrangements only provide protection for the transformer; primary and secondary conductor protection may have to be provided by other devices.

4.5.23.6 Ancillary Circuit Protection. Overcurrent protection of circuits supplying ancillary equipment is selected based upon the applicable requirements of the Code for the specific equipment.

4.5.24 Illumination. Lighting equipment is installed on cranes for specific illumination purposes. In mercury exclusion areas fluorescent and high intensity discharge lamps (which contain elemental mercury) must be installed within sealed lenses or refractors which serve as a second means of containment for the mercury.

4.5.24.1 Crane Passageways and Spaces. On bridge cranes, footwalks are illuminated. Lighting is also provided in the operator's cab. Switching is local.

On newer portal, floating, and container cranes, walkways, ladders, and stairs are illuminated. For stairways and ladders, switches are provided at both the top and bottom; walkway lighting is switched locally. The machinery house is illuminated to 40 footcandles with a switch being at each entrance. The operator's cab is provided with two lighting systems, one provides white light and the other red light. Red lighting is needed for the operator to retain "night vision".

Additionally on portal, floating, and container cranes, access lighting is provided for use when the crane's electrical system is not energized. This system is supplied from the diesel engine starting batteries or other available

sources of power. Timer type switches are used to limit the length of time current is being drawn from the batteries.

4.5.24.2 Hook Load. Spotlights, trainable from within the operator's cab, are provided on portal and floating cranes. The operator can use the spotlights to illuminate the load under the hook.

4.5.24.3 Work Area. On portal and floating cranes, floodlights are mounted along the boom to illuminate the work area beneath it. Mounting brackets for the floodlights are designed to permit the floodlights to hang plumb at any boom angle. The floodlights are switched from the operator's cab. Floodlights are also mounted around the portal base or tub to illuminate the area about the crane. These floodlights are also switched from the operator's cab.

On bridge cranes, floodlights are mounted along the bridge to illuminate the floor area beneath the crane. The floodlights are spaced to match the building's lighting fixture arrangement so as to compensate for the shadow cast by the crane.

4.5.24.4 Aircraft Warning. If the highest location on a crane is more than 200 feet above the ground, aircraft warning lights must be installed there. If that location is the tip of the boom, the control circuit for the warning lights is designed to ensure that they are energized when the boom tip is 200 feet or more above the ground and de-energized when it isn't. Local civil aviation authorities may have more stringent rules if an airfield is located nearby. These lights should be fed from the dedicated panelboard for equipment heater and battery charger circuits.

4.5.25 Operator's Controls. Master switches or pendent station pushbuttons are used to enable the crane operator to control the motors. In stepped control systems, contacts in the master switch or pushbutton are configured to be closed in various speed points to establish circuits energizing specific combinations of relays and contactors to obtain designed motor performance. In infinitely variable control systems, encoders, inductors, or rheostats provide the reference signal for motor speed.

4.5.25.1 Pendent Pushbutton Stations. Pendent pushbutton stations are suspended from bridge cranes for use by the operator. In addition to the pushbuttons needed to control the speed and direction of each crane drive, POWER ON and POWER OFF pushbuttons are provided to control the main line contactor. The drive control pushbuttons are spring returned to the OFF position. A white POWER AVAILABLE and a blue POWER ON indicating light, to indicate that there is power on the line and load sides of the main line contactor, respectively, are also provided on the station. A red MOTOR OVERTEMPERATURE indicating light may be there, also. There is also a toggle switch to turn on the floodlights.

Pendent pushbutton station enclosures may be fabricated from plastic, hard rubber, aluminum, or stainless steel and selected based upon the environment in which they are used. All metal parts on the pendent pushbutton station must be grounded.

The pendent pushbutton station is suspended by a stainless steel wire rope. This eliminates any carrying of the weight of the station by the electrical cable used.

A festooned system, similar in design to a bridge-to-trolley electrification system but running on a separate track, is frequently used with a pendent pushbutton station. In this application a specially designed lead trolley is free to be pulled by the crane operator or it may be motor driven if the track is more than 40 feet above the floor. Connections between the festooned and pendent conductors are made in a junction box on the lead trolley. If the pendent pushbutton station is not suspended from a festooned system, it would usually be suspended from the crane trolley. The disadvantage of this is that it limits operator mobility.

4.5.25.2 Master Switches. Master switches are used in operator's cabs on bridge, portal, floating, and container cranes to control the speed and direction of the crane drives. While having the master switches spring returned to OFF position is preferable, quite often they are not, even if they are infinitely variable in movement.

The "dead-man" feature is incorporated into master switches by having a mechanism which must be continually operated. This mechanism may be a pushbutton on the top of the handle or a grip added to the side of the handle. Future designs may incorporate a passive conductive or capacitive circuit in lieu of a switch mechanism. To reduce operator fatigue, only one device has to be operated at a time to enable all master switches to be functional. The operator attentiveness monitoring "dead-man" circuitry also incorporates safeguards to ensure that all master switches are in the OFF position before it can be energized.

4.5.25.3 Radio Controls. In addition to master switches in cabs and pendent pushbutton stations, portable transmitter units are used to control cranes. These control units transmit radio signals to the crane; there is receiving equipment on the crane and additional equipment to interface with the motor control equipment.

Most manufacturers digitally pulse encode the radio signal. This makes the system less susceptible to interference due to other equipment. However, if interference does occur, the crane will be shut down and remain out of operation, from the radio control equipment, as long as the interference occurs. Functional decoding equipment is installed on the crane.

The range of the portable transmitter is less than 650 feet. A unique "address" signal is also transmitted to ensure that only one transmitter can control a given crane. This permits several cranes in one building to be radio controlled simultaneously.

In industrial applications, the radio signal is transmitted on a frequency between 72 and 76 megahertz. However, this frequency band is reserved for industrial use and is not available for Government use. Navy activities can obtain dedicated frequencies between 30 and 50 megahertz. Most manufacturers can provide transmitting equipment operating in the Navy's frequency band.

4.5.25.4 Infrared Controls. Another type of portable transmitter control unit emits infrared light.

Infrared control units transmit pulsed, encoded, waves of light to the crane. There are sensors, decoders, and interface modules on the crane to participate with the motor control equipment. The infrared signal's wavelength, between 780 and 10^5 nanometers, is impervious to radio frequency interference. One of the benefits of using infrared transmitters is that frequency allocations and assignments are not required.

Two infrared transmitters can operate side-by-side without cross-talk interference or one transmitter can operate multiple cranes. The range of the infrared transmitter is 100 to 200 feet, depending on the model and manufacturer. An infrared transmitter cannot operate a crane when the transmitter is directed away from the crane or is out-of-range.

4.5.26 Radio Frequency Links. Radio frequency (RF) insulating links are installed between the crane lifting hook and the hoist block to protect personnel in contact with the hook or the load under the hook from:

a) Voltages induced in the crane structure or wire ropes from radio frequency (RF) transmitting antennas.

b) Internal crane electrical faults.

c) Inadvertent contact between the crane structure or wire ropes and external power sources.

The metal spoke end pieces consist of a series of spokes located radially on the body of the unit. The metal spoke end pieces are fabricated from high strength steel, conforming to ASTM-A148, Grade 80-50, and are cadmium plated. High tensile strength glass filament impregnated with epoxy resin is wound between the end pieces. A layer of this same material is circumferentially wound over the longitudinal strands to induce equal tension in all strands. The metal spoke end pieces are sufficiently separated to provide the RF attenuation and high-voltage rating required. The link is encapsulated with a polyurethane elastomer and also has a polyurethane jacket, tinted orange. Figure 23 shows a cross sectional view of a typical RF link.

4.5.26.1 RF Link Gauges. Each link should have an accompanying gauge. The gauge is used to verify that elongation of the glass fiber has not occurred. Prior to any load ever having been applied to the link, the gauge was used to indent two trammel points; these points are used with the gauge to verify that elongation has not occurred.

4.5.27 Grounding and Bonding. The National Electrical Code has requirements for both grounding and bonding.

4.5.27.1 AC System Grounding. AC systems are required in NEC Section 250-5 to be grounded where the maximum voltage to ground on the ungrounded conductors is 150 Volts or less. On cranes, this would involve certain control circuits operating at less than 50 volts, control circuits operating at more than 50 volts which include wiring external to their panel's enclosure, and 208Y/120 VAC utilization systems. The grounded conductor of the system must be connected to the structure between the transformer and the first system disconnecting means or overcurrent device.

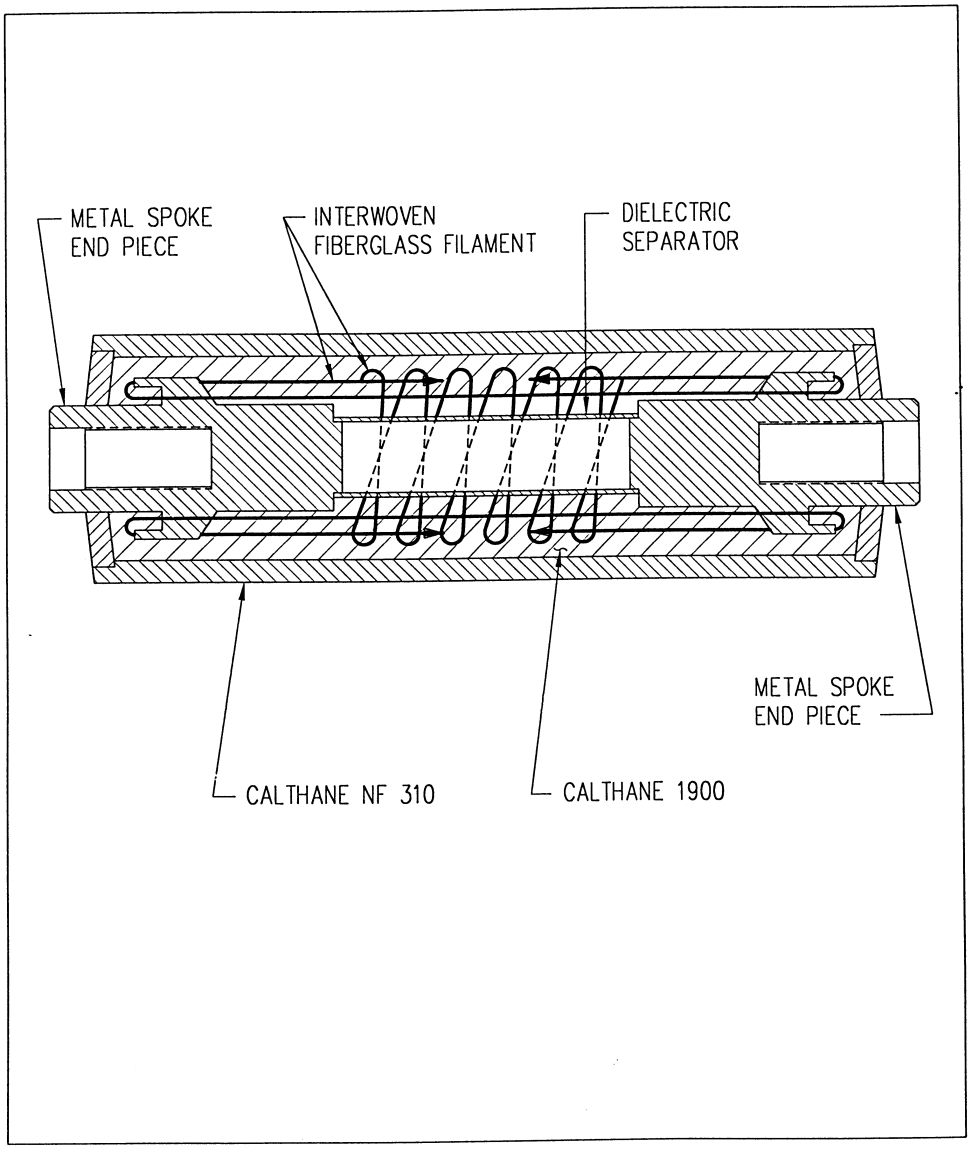

FIGURE 23
RF LINK

4.5.27.2 DC System Grounding. DC systems which include wiring external to control panel enclosures are required in NEC Section 250-3 to be grounded unless the system is equipped with a ground detector, the system operates at 50 VDC or lower or at 300 Volts or higher, or the system is derived from a rectifier. On cranes, DC systems generally do not have to be grounded as one of these exceptions is applicable.

4.5.27.3 Bonding. All exposed, non-current carrying metal parts on cranes are required in NEC Section 610-61 to be metallically joined together, by means of mechanically fastening or welding uncoated surfaces, that is bonded, so that they are grounded. The equipment grounding conductor is used to connect the non-current carrying parts of equipment to the system grounded conductor. Although various types of conductors, sheathing, and raceways are described in NEC Section 250-91(b), NCC policy is to require that the equipment grounding conductor be in the form of a wire sized in accordance with NEC Table 250-95.

4.5.27.4 Drum Grounding. NCC policy is to require that wire rope drums of built-up hoists on newer cranes be grounded by means of a copper ring, supported from one drum end flange in such a manner that it is electrically bonded to the drum, and a collector connected to the equipment grounding conductor system by means of a #12 AWG copper wire.

4.5.27.5 Grounding Through the Electrification System. Regardless of the type of equipment grounding conductor used elsewhere on a crane, an equipment grounding conductor in the form of a wire must be included in all bridge crane festooned conductor and cable reel electrification systems. This is because none of the other types of conductors described in NEC Section 250-91(b) can be used in such electrification systems. An equipment grounding conductor is included as one of the conductors in rigid conductor systems. This complies with NEC Section 250-91(b).

4.5.27.6 Lightning Protection. For lightning protection on newer outdoor cranes, NCC policy is to require that bonding conductors be provided across all gudgeons and the boom hinge and strut pins; the minimum size of these conductors is 2/0 AWG. Also, it is required that a revolving crane’s upperworks be electrically bonded to the nonrotating portion utilizing size 2/0 AWG conductors and a collector ring having a minimum cross-sectional area of 70 square millimeters. Likewise, the equipment grounding conductor in festooned runway and bridge-to-trolley electrification systems is required to be size 2/0 AWG (minimum) and in rigid electrification systems is required to have a minimum cross-sectional area of 70 square millimeters.

4.5.28 Reduced Voltage Starters. Acceleration of a squirrel cage motor can be made less abrupt through the use of reduced voltage starting. By inserting resistance or reactance in series with the motor windings, the voltage at the motor terminal is reduced. Current reduction is directly proportional to voltage reduction. Torque is reduced in proportion to the square of the voltage reduction.

4.5.29 Attached Safety Systems and Devices. These standard commercial products include load indicating devices (LIDs), load moment indicating devices (LMIs), and anti-two-block devices (A2Bs). On new mobile cranes the LMIs and A2Bs are standard integral systems or available as options. Some of the older mobile

cranes are not equipped with any of these devices, and when they are to be retrofitted with them, a Crane Alteration Request must be submitted to the NCC for approval.

4.5.29.1 Load Indicating Devices. LIDs are required on all cranes in longshoring service; the weight of the load under the hook must be displayed in the operator's cab. Alternatively a device which would prevent an overload condition could be used. LIDs are intended to verify the weight of the load being lifted after its weight has been closely estimated by other means; they are not to be used as "short cuts" to load estimation. LIDs are appropriate on straight-line rated boom cranes and other crane types not subject to overturning. The load determination is either direct (measurement of the wire rope tension at a fixed dead end) or indirect (measurement of the lateral deflection force of wire rope between three sheaves in a rigid frame). Direct reading LIDs may be wired to the control and display circuits or they may send a radio frequency signal to system receivers. Indirect reading LIDs are usually wired to the control and display circuits. LID installations have provisions to account for the number of parts of line in the reeving system. Retrofitting of LIDs is at the discretion of the local activity.

Portable battery powered LIDs, intended for suspension from the crane load hook, are also available. They have an eye or shackle at the top to engage the crane load hook and a shackle or their own load hook on the bottom for connection to the rigging. The weight of the lifted load is sensed directly and displayed on the side of the LID frame. Additionally, these LIDs include an option for radio transmission of the lifted weight to a remote mobile or built-in receiver in the operator's cab. The remote receivers may be obtained with integral visual and audible alarms to signal overloads.

The Recommended Practice of SAE Standard J376, Load Indicating Devices in Lifting Crane Service, establishes the minimum performance criteria for the measurement and display systems of LIDs.

4.5.29.2 Load-Moment Indicating Systems. LMIs are required to be provided on all new mobile cranes. Use of an LMI would meet the requirement for a LID on a crane in longshoring service. They utilize a processor to combine the output of a LID with boom angle sensors to monitor and restrict crane operation to its approved strength and stability limits, as defined by the particular crane's load chart. LMIs provide a continuous visual display of the margin of stability for the lifted load at the particular radius as the load is maneuvered, and can be programmed to warn the operator with an audible or visual alarm or to automatically stop the motion in the outward or less stable rotational direction. However, LMIs do not take into consideration the effects of wind or slope, and the crane operator must be judicious on reliance on these devices.

The Recommended Practice of SAE Standard J159, Load Moment Systems, establishes the minimum performance criteria for these systems. Additional requirements of OSHA Regulation 1917.46, Load Indicating Devices, apply to cranes used in longshoring service.

4.5.29.3 Anti-Two-Block Devices. A2Bs are intended to prevent the lower block from being hoisted into the structure of the crane. Navy boom cranes have traditionally incorporated limit switch arrangements to preclude two-blocking.

Some standard commercial mobile cranes manufactured before 28 February 1992, however, are not equipped with A2Bs. Those of later manufacture are equipped with A2Bs.

There are three commercial A2Bs available on mobile cranes – those that give a warning of impending two-blocking, those that prevent damage from two-blocking, and those that preclude two-blocking. The Recommended Practice of SAE J1350, Two-Block Warning and Limit Systems in Lifting Crane Service, establishes the minimum performance requirements for these devices. NCC policy is to require A2Bs that prevent two-blocking on all mobile cranes.

4.5.29.4 Additional Requirements. All load bars (tension links) of LIDs and LMIs used on Navy cranes are required to comply with additional requirements, beyond those of commercial practice. Steel tension links must have a minimum design factor of 5.0, based on its rated capacity and the material ultimate strength, and a hardness not greater than 40 Rockwell C. Aluminum tension links must have a minimum design factor of 7.0, as defined above.

4.5.29.5 Wind Speed Indicating Systems. Wind speed indicating devices are required on all cranes in longshoring service, with the speed of the wind displayed in the operator’s cab. NCC also requires that the direction of the wind be displayed. A transmitter is mounted on a portion of the crane’s upperworks in a location free from obstructions to the flow of the wind. It is directly connected to a display unit in the operator’s cab. The display unit is also programmed to give the operator a visible or audible warning of high wind conditions. The transmitter is to be fitted with a heater to eliminate freezing.

4.5.30 Painting and Corrosion Protection. Electrical equipment is usually painted by its manufacturer and field painting is not required. Steel panel enclosures received in unpainted condition are to be painted in accordance with paragraph 4.1.29. Enclosures fabricated from stainless steel are not to be painted. Other than aluminum which has not been anodized, nonferrous metals are also not to be painted. Motors used in outdoor applications are to be factory painted to their manufacturer’s standard for “wash-down” service. Prior to painting galvanized rigid steel conduit, it must be sprayed with a zinc-phosphate primer. Gaskets of enclosures and fixtures, and joints and contact surfaces of explosion-proof and dust-ignition-proof enclosures must be kept free of any paint.

Section 5: DESIGN CRITERIA

5.1 Structural. The extent of industry structural design standards varies widely with the crane types. For OET cranes, CMAA Specification #70 provides clear, comprehensive design methodology and criteria. On the other hand, there are no industry design standards for portal and container cranes. Consequently, structural design of some cranes and particular components and assemblies follows the general design criteria of AISC Manual of Steel Construction - Allowable Stress Design and specific requirements of the Navy Crane Center. The paragraphs that follow outline the minimum structural design requirements of the NCC for each crane type.

Welding design and weld details of OET, underrunning, gantry, and semi-gantry cranes are governed by the American Welding Society (AWS) standard ANSI/AWS D14.1, Specification for Welding of Industrial and Mill Cranes and Other Material Handling Equipment; of mobile cranes by ANSI/AWS D14.3, Specification for Earthmoving and Construction Equipment; of all other cranes by ANSI/AWS D1.1, Structural Welding Code – Steel; and of barge hulls by American Bureau of Shipping standards. Bolted connections and bolt installation are required to comply with the AISC Specification for Structural Joints Using ASTM A325 or A490 Bolts. Structural connections in the hook load path are considered slip critical; therefore, the bolts are required to be fully pre-tensioned. The AISC Specification does not recognize the use of standard torques determined from table or formulas which are assumed to relate torque to tension. The bolt tension produced by the chosen method of installation must be verified with a tension measuring device, such as a Skidmore-Wilhelm type of bolt tension calibrator.

Specified test loads always include the associated percentage of tolerance; that is, the 125 percent (+5 percent, -0 percent) test load is taken as 130 percent of the rated capacity for design purposes.

5.1.1 Structural Design Loads. The following is a brief discussion of loads that are usually considered in the design of some or all types of cranes.

5.1.1.1 Dead Load. Dead Load consists of the weight of all parts of the structure, machinery, and equipment, including the hook blocks and rope. A portion of the dead load on cranes, such as trolleys and booms, must be considered as moving dead load. On portal and floating cranes, a large portion of the dead load is moving dead load. On these types of cranes, the center of gravity of the boom, strut, hook blocks, and rope must be accounted for at each hook radius considered in design.

5.1.1.2 Rated Load. The maximum rated capacity of the hoist is considered as a vertical static load on the hook. This load produces reactions throughout the crane structure that also must be considered in the design of individual components – for example, wire rope loads on sheaves and drums.

(Standard commercial mobile cranes include the weight of the hook block, and in some cases the wire rope, in the rated load.)

5.1.1.3 Impact. Impact is the term commonly used for the vertical dynamic force on the lifted load due to handling. Impact is applied as a static increase to the lifted load. Percentages of increase, or impact factors, for OET cranes, underrunning cranes, and cantilever cranes are given in the applicable industry

standards (CMAA #70, CMAA #74, and MH27.1). Percentages of increase for other types of cranes may be determined by a rational method of analysis, or by the manufacturer's standard practice, but for portal and floating cranes, they should not be less than the minimum values given in Table 1.

Table 1
Percentages of Increase for Impact

	Portal Cranes			Floating Cranes	
Rated Hook Capacity (Pounds)	Upperworks	Portal Base/ Tower	Travel System*	Upperworks	Tub
Under 100,000	30	15	25	15	10
100,000 to 160,000	25	12	25	15	10
161,000 to 240,000	20	10	25	15	10
Over 240,000	15	10	25	15	10

* Impact on travel system is applied to the total vertical load.

5.1.1.4 Wind Load. Cranes operating in outdoor environments must be designed with the consideration of loads due to wind, both for operating and non-operating wind conditions. ("Operating wind" does not restrict crane operation; "non-operating wind" prohibits crane operation.) Wind loads for OET, gantry, and semi-gantry cranes are addressed in CMAA #70; and for underrunning cranes, in CMAA #74. Past design practice was to represent the operating wind load by a uniform pressure of 5 pounds per square foot (psf); and the non-operating wind load by a uniform pressure of 20 psf. Current practice is to use wind loads due to a wind velocity of 40 miles per hour (mph) for the operating wind case (55 mph for container cranes), and the maximum wind gust velocity at the geographic location for the non-operating wind case.

The magnitude of the wind load is to be determined by a procedure contained in a generally recognized engineering standard or code, and which accounts for maximum gust velocity (for non-operating wind load), shape factors, and height effects on portions of the crane above a 30 foot elevation. The preferred procedure is contained in MIL-HDBK-1002/2, Loads, Section 7. Using this procedure, the wind velocity is related to its corresponding velocity pressure (q) in psf, at a 30 foot elevation, as follows:

EQUATION: $$q = 0.00256V^2 \quad (1)$$

Where

V = the wind velocity in mph.

The wind load (p) in psf, for any portion of the crane, is obtained by multiplying the velocity pressure by the appropriate shape factor (C_s) and height correction factor (C_h) as follows:

EQUATION: $$p = q \times C_s \times C_h \quad (2)$$

The height correction factor, applied to portions of the crane that are more than 30 feet above the ground, is determined using the following formula:

EQUATION: $$C_h = (h/30)^{2/7} \quad (3)$$

Where

h = height above the ground in feet

For portions of the crane that are 30 feet or less above the ground, C_h is equal to one. Other acceptable procedures are those of FEM, Rules for the Design of Hoisting Appliances; and ANSI/ASCE 7-95, Minimum Design Loads for Buildings and Other Structures. The maximum wind gust velocity for a particular geographic location is obtained from the data in MIL-HDBK-1002/2 or ANSI/ASCE 7-95. When the wind area of the rated hook load is specified, it must be included in the determination of the loads due to the operating wind case. The wind load direction is selected to produce the maximum stress for the applicable load combination.

The older portal cranes have been designed (for both strength and stability) to withstand a non-operating (uniform) wind pressure of 20 psf, with the boom at minimum radius and the upperworks rotated to the least stable position. The newer cranes are designed for maximum wind gust velocity at the geographic location; however, the configuration of the crane varies as follows:

a) The crane must meet stability requirements for a non-operating wind velocity of 80 mph, with the boom at minimum radius and the upperworks rotated to the least stable position. If the maximum wind gust velocity at the crane's location is 80 mph or less, the crane structure must be designed for an 80 mph non-operating wind velocity in this configuration.

b) If the maximum wind gust velocity at the crane's location is greater than 80 miles per hour, provision shall be made for putting the crane into a more stable stowed configuration for maximum wind gust conditions. This may include setting the boom at a greater radius, using a more stable rotate position, and providing slide protection or tie-downs, if required. In its stowed configuration, the crane must meet the strength and stability requirements for its maximum non-operating wind velocity.

5.1.1.5 Acceleration and Deceleration Forces. The acceleration and deceleration of the travel drives and rotate drives (if applicable) produce horizontal loads that must be considered in design. For portal cranes, floating cranes, and cantilever cranes, the rate of acceleration is based on accelerating from a standstill to the rated speed of the drive in 8 seconds. The rate of deceleration, caused by loss of power or "panic stopping", is based on the ratings of the brakes and is considered an emergency condition. Rates of acceleration for OET cranes and underrunning cranes are given in the applicable industry standards (CMAA #70, CMAA #74, and MH27.1).

5.1.1.6 Spreading and Squeezing Forces. The portal base of a portal crane is subjected to spreading and squeezing forces. When a portal crane travels into a curve, the effective gauge of the rail changes, and the travel trucks slide on their

float bushings. The friction forces due to this outward or inward movement, called spreading and squeezing forces, are applied to all travel wheels horizontally (and perpendicular to the rail axis) at the contact points on the rails. The spreading and squeezing forces are taken as 12 percent of the maximum wheel load caused by dead load and rated load. Designing a portal base for lateral loads of this magnitude (concurrently with other operating loads) has been found to give it sufficient lateral strength at the corners.

5.1.1.7 Additional Loads on Floating Cranes. Floating cranes experience list and trim under operating conditions, causing the vertical axis of the crane to not be parallel to the true vertical axis. The angle between the vertical axis of the crane and the true vertical axis, in the direction perpendicular to the hook radius, is called the sidelead angle, and the resulting component of force is the sidelead force. The angle between the vertical axis of the crane and the true vertical axis, in the direction parallel to the hook radius, is called the offlead angle, and the resulting component of force is the offlead force. The offlead force is usually neglected for design purposes.

A horizontal side load is applied to floating cranes for design purposes. The horizontal side load is a combination of the acceleration forces due to rotate motion, and the sidelead force due to the maximum list and trim.

Floating cranes are required to be towed at sea, and must be designed for the wave motion that they will experience. The resulting roll, pitch, and heave are determined by the selected sea state; and their dynamic effects are calculated by a rational method of analysis, which must be approved by the NCC.

5.1.1.8 Seismic Forces. NAVFAC Manual P-355, Seismic Design for Buildings, requires that OET cranes and underrunning cranes be designed for seismic forces. The effects of seismic forces on certain types underrunning cranes is considered to be negligible due to a combination of flexible runway, end trucks, and trolley mounting. Top running OET cranes should be analyzed for seismic forces if they are located in seismic zones 2B, 3, or 4. In lower seismic zones, seismic forces historically have not governed the design of these types of cranes. Container cranes are usually analyzed for seismic forces. Portal cranes are sometimes analyzed, depending on their location and their use.

Portal cranes and container cranes are usually analyzed by the methods used on buildings. The seismic load is applied at the travel wheel treads. The crane structure is to be treated as a steel moment resisting frame and analyzed by the methodology of any of the following codes – NAVFAC Manual P-355, American Society of Civil Engineers (ASCE) standard ANSI/ASCE 7-95 Minimum Design Loads for Buildings and Other Structures, or Structural Engineers Association of California (SEAOC) Manual Recommended Lateral Force Requirements. Other widely recognized codes may be accepted by NCC, provided that the analyses are presented in a format that permits an efficient review by structural engineers. The seismic zone and site conditions at the crane’s location determines the various factors used in these analyses.

5.1.2 Design of Structural Components. The design criteria follows the established industry standards and practices when they are available; deviation from them is made only in exceptional situations peculiar to Navy requirements or operating environment.

5.1.2.1 OET Cranes. These cranes are designed entirely in accordance with CMAA #70. Unique requirements (such as test load cases), special features (such as field splices of bridge girders), and other items which are beyond the scope of CMAA #70 are addressed separately by the NCC in the procurement specifications.

Single web bridge girders are particularly subject to lateral/torsional buckling, and must always be analyzed conservatively for this condition with the appropriate lateral and torsional load applied.

5.1.2.2 Underrunning Cranes. Design criteria for underrunning cranes with bridge girders fabricated entirely from structural steel, both welded box and single web type, is prescribed by CMAA #74. For cranes with patented track type bridge girders, which are preferred by the NCC, the criteria are given in ANSI MH 27.1. These two documents use different design approaches and their analyses and criteria must not be intermixed.

Manufacturers of these cranes utilize many standard components such as end trucks, runway suspension hardware, and patented track bridge girder sections. The rated capacities of these components and patented track bridge girders of various lengths are published in the manufacturer’s catalogs. When such technical information is available, and the calculated loads do not exceed the published ratings, these standard components may be used without any additional structural analyses.

5.1.2.3 Cantilever Cranes. There are no industry design standards for any of the cantilever types of cranes; however, NCC policy is to require that the individual components that match those of OET or underrunning cranes (specifically booms, end ties/end trucks, and trolley frames) comply with the design requirements of CMAA #70, CMAA #74, or ANSI MH 27.1. Components peculiar to the specific configuration – such as pillars, foundations, tie rods, wall brackets, vertical frames, and anchor bolts – are designed in accordance with the AISC Manual of Steel Construction.

5.1.2.4 Portal Cranes. The design of most structural components of a portal crane is governed by main hoist operating load cases. Since portal cranes are capable of lifting a load in any number of positions (by rotating and luffing the boom), many different combinations of hook operating radii and rotate positions must be considered in their design.

The major structural components of a portal crane upperworks (the boom, A-frame, strut, and machinery deck) are affected by the position of the boom. For a given load on the hook, the forces on these components should be determined in 5 to 10 foot increments, for the full range of main hoist operating radii and the corresponding rated load. Then, the stresses in each structural member and connection, in each of these components, must be determined for one or several of the radii considered. The designer must use good judgement in determining which radii to use on each component, and on each member and connection in that component, in order to determine its adequacy under all operating conditions. To determine the stresses in every member and connection, in every structural component, for every radius considered would be excessively time consuming.

The portal base is affected by the radius of the boom, and by the orientation of the boom axis to the portal base axis. For design purposes, the portal base should be analyzed for three orientations of the boom axis: parallel to the rails, perpendicular to the rails, and at the orientation which produces maximum corner load. Each of these three orientations should be analyzed for two boom radii: the radius which produces maximum overturning moment on the portal base, and the radius which produces maximum axial load on the portal base (unless they occur at the same radius). The load case of the boom at minimum radius with no load should be examined to see if it produces maximum overturning moment. Also, each of the radius/orientation cases described above should be combined with spreading forces, and separately with squeezing forces.

Several other load cases should be investigated for various areas of the crane. For example, the auxiliary hoist and whip hoist govern the design of the outer section of the boom (beyond the main sheaves), as well as their associated sheave supports and hoist foundations. The boom foot is usually governed by non-operating wind forces. The rear portion of the machinery deck may be governed by the load case of the boom at minimum radius with no load, or with the boom removed for maintenance.

Structural design criteria for portal cranes are established entirely by NCC, and they reflect successful traditional practices of Navy crane designs tailored to the shipyard environment. The following paragraphs prescribe the design load combinations and maximum allowable stresses for each structural component of portal cranes. The maximum stress levels listed below represent the percentage of AISC allowable values for the particular material.

a) Boom, A-frame, Strut, Pendants, Machinery Deck and Hoist Foundations. Three load cases are considered:

1) Dead load, rated hook load with a vertical impact factor, 40 mph wind, and acceleration forces due to rotate and travel motion. The maximum stresses are limited to 85 percent of AISC allowable values.

2) Dead load and non-operating wind load from the front, rear, or side, with the boom at the specified radius. The maximum stresses are limited to 133 percent of AISC allowable values for the particular material.

3) For fatigue analyses: the stress range is defined as the algebraic difference between the stresses due to: (a) dead load plus 50 percent of the main hoist rated hook load, and (b) dead load with no hook load. If the crane is straight-line rated, the main hook will be at its maximum operating radius for this load case. If the crane is variably rated, the main hook will be at 75 percent of its maximum operating radius for this load case. (And the load will be 50 percent of main hoist rated capacity at that radius.) The maximum allowable stress range is limited to 100 percent of AISC allowable values for Loading Condition 2 (that is, 100,000 to 500,000 cycles).

Additionally, this load case is to be applied to the boom section between the whip hoist sheave and the main hoist sheave nest, using the dead load and 100 percent of the whip hoist rated hook load. On cranes with auxiliary hoists, this load case is also applied to the boom section between the auxiliary and main hoist

sheave nests, using 75 percent of the auxiliary hoist rated hook load. (Normally whip and auxiliary hoists of variably rated cranes have constant ratings.) For both of these boom section analyses, the boom is assumed to be at 75 percent of each hoist's maximum operating radius.

4) Dead load, 150 percent main hoist rated load with a vertical impact factor. This load case is applied only to the analysis of the king pin on roller path type of cranes. The maximum stresses are limited to 133 percent of AISC allowable values.

b) Portal Base. Four load cases are considered:

1) Dead load, main hoist rated hook load with a vertical impact factor, 40 mph wind, acceleration forces due to rotate and travel motion, and spreading or squeezing forces. The maximum stresses are limited to 85 percent of AISC allowable values.

2) Dead load and non-operating wind load – from the front, rear, or side with the boom at the specified radius. The upperworks is positioned with the boom in the specified direction. The maximum stresses are limited to 133 percent of AISC allowable values.

3) For fatigue analysis: dead load with the boom at minimum operating radius. The stress range is defined as the algebraic difference between the stresses due to: (a) the boom directly over the section, and (b) the counterweight directly over the section. The maximum allowable stress range is limited to 100 percent of the AISC allowable values for Loading Condition 2 (that is, 100,000 to 500,000 cycles).

4) For fatigue analysis: the stress range is defined as the algebraic difference between the stresses due to the upperworks load case defined in paragraph 5.1.2.4 a) (3), for the main hoist only. The maximum allowable stress range is limited to 100 percent of AISC allowable values for Loading Condition 2 (that is, 100,000 to 500,000 cycles).

c) Machinery House and Operator's Cab. Three load cases are considered:

1) Dead load, 40 mph wind, and a distributed roof load of 20 psf, or the local snow load, whichever is greater. The maximum stresses are limited to 100 percent of AISC allowable values.

2) Concentrated downward load of 250 pounds at any location on the roof. The maximum stresses are limited to 100 percent of AISC allowable values.

3) Dead load, snow load, and non-operating wind load from any direction. The maximum stresses are limited to 133 percent of AISC allowable values.

d) Other Structural Components. Structural components and members which are not specifically addressed above, are to be designed according to the criteria to which they are related.

5.1.2.5 Floating Cranes. Structural design criteria for the upperworks of floating cranes are established entirely by the NCC and parallel those of portal cranes. For this reason, the major structural components of a floating crane upperworks (the boom, A-frame, strut, and machinery deck) should be designed in the same manner as a portal crane upperworks, as discussed in section 5.1.2.4. The structural design of the barge hull is governed by the standards of the ABS "Rules for Building and Classing of Steel Barges."

The tub (or pedestal) of a floating crane is affected by the radius of the boom. The tub supporting structure in the barge is affected by the radius of the boom, and by the orientation of the boom axis to the barge axis. Several orientations of the boom axis should be considered in order to find the maximum load on each of the supporting members (usually bulkheads) in the barge. Each of these boom axis orientations should be analyzed for two boom radii: the radius which produces maximum overturning moment on the tub, and the radius which produces maximum axial load on the tub (unless they occur at the same radius).

The following paragraphs prescribe the design load combinations and maximum allowable stresses for each structural component of a floating crane. The maximum stress levels listed below represent the percentage of the AISC allowable value for the particular material.

a) Boom, A-frame, Machinery Deck, Tub and Hoist Foundations. Five load cases are considered:

1) Dead load, main hoist rated load with a vertical impact factor, horizontal side load, and 40 mph wind. The maximum stresses are limited to 85 percent of AISC allowable values.

2) Dead load, 80 mph wind, and simultaneous maximum list and trim. This load case must be applied to the boom at minimum operating radius and the wind from the front or rear, boom at minimum radius and the wind from the side, the boom at maximum radius and the wind from the side. The maximum stresses are limited to 100 percent of AISC allowable values.

3) Dead load, 145 mph wind, and dynamic effects due to pitch, roll, and heave. For this load case, the crane is assumed to be fully tied down (if tie-downs are provided), with the rotate locking device engaged and the boom secured in the boom rest. The maximum stresses are limited to 133 percent of AISC allowable values.

4) Dead load, 150 percent main hoist rated load with a vertical impact factor. The crane is assumed to be level. This load case is applied only to the analyses of the king pin or hook rollers (if applicable) on roller path type cranes. The maximum stresses are limited to 133 percent of AISC allowable values.

5) For fatigue analyses, use the portal crane load case described in paragraph 5.1.2.4 a) (3). The maximum allowable stress range is limited to 100 percent of AISC allowable values for Loading Condition 2 (that is, 100,000 to 500,000 cycles).

b) Boom Stops (and A-Frame). One load case is considered:

1) Dead load, main hoist rated load with the main hook 5.0 feet out from its minimum operating radius, and the barge level. The hook load is assumed to be suddenly released (lost) and the strain energy in the wire ropes and structural components is permitted to pull the boom towards the boom stops. If calculations indicate that contact is made with the boom stops, then the maximum stresses in the A-frame and the boom stops are limited to 100 percent of AISC allowable values.

c) Tub. One additional load case is considered:

1) For fatigue analyses: dead load with the boom at minimum operating radius. The stress range is defined as the algebraic difference between the stresses due to: (a) the boom directly over the section, and (b) the counterweight directly over the section. The maximum stress range in the tub and its connections to supporting structure in the barge should be determined. The maximum allowable stress range is limited to 100 percent of AISC allowable values for Loading Condition 2 (that is, 100,000 to 500,000 cycles).

d) Other Structural Components. Structural components and members which are not specifically addressed above, are designed according to the criteria to which they are related.

e) Barge Hull. Barge hull is designed according to the criteria of ABS and must be submitted to that organization for review and approval.

Barge hull analysis includes the tub supporting structure, boom rest (supporting the weight of the boom), pilot house, and the cargo deck with a distributed load of 5000 pounds per square foot (but not exceeding 1,000,000 pounds).

5.1.2.6 Container Cranes. The following structural design criteria for container cranes are derived from informal standards of industry, port authorities, and engineering firms specializing in the design of these cranes. In the load combinations described below, all loads are to be applied simultaneously on the most adverse crane configuration. In lieu of the load combinations described below, the FEM “Rules for the Design of Hoisting Appliances” may be used, subject to NCC approval. When analyses include secondary (P-delta) effects due to elastic deformation of the structure and joint flexibility, the maximum allowable stresses may be increased by a factor of 1.2, provided that the structure conforms to the stress limits when the secondary effects are not considered. For fatigue analyses, however, the secondary effects must be considered but with no increase in the maximum allowable stresses.

a) Entire Structure (Operating Configuration). In this condition, the boom is horizontal and supported by the boom stays. Nine load cases are considered for normal and overload conditions:

1) Dead load, trolley dead load, live load (container weighing 89,600 to 112,000 pounds), lift system (head block, spreader, wire ropes, and sheaves), skewing force couple (5 percent of the gantry maximum wheel loads), and 150 percent of acceleration/deceleration forces (due to gantry or trolley travel). The center of gravity of the container is assumed to be eccentric by 10 percent from its geometric center in the longitudinal and transverse directions (4.5 feet on a 45-foot long container, and 0.8 feet on an 8-foot wide container).

The skewing forces are applied to the wheel flanges (perpendicular to the rails). The forces due to gantry travel must be at least 5 percent of the total crane weight, including the container weight, and are applied in the direction of gantry travel; additionally, 25 percent of that force is applied perpendicular to the direction of travel. The maximum stresses are limited to 90 percent of the AISC allowable value.

2) Dead load, trolley dead load with a 10 percent vertical impact factor, live load plus lift system with a 30 percent vertical impact factor, trolley lateral load, and a 55 mph operating wind applied in the most adverse direction.

The trolley lateral load due to its acceleration/deceleration on the boom and main beams is calculated on the basis of the trolley drive motor and brake characteristics but must be at least 10 percent of the trolley dead load, live load, and lift system; additionally, 25 percent of that force is applied perpendicular to the direction of travel. The maximum stresses are limited to 90 percent of AISC allowable values.

3) If the crane is equipped with a load beam: dead load, trolley dead load, load beam rated load plus load beam lift system with a 30 percent vertical impact factor, and operating wind load. The rated load is assumed to be at the geometric center of the load beam. The maximum stresses are limited to 90 percent of AISC allowable values.

4) Dead load, trolley dead load, lift system (head block, spreader, wire ropes, and sheaves), snag force, and operating wind load.

Snag force is due to the full impact of the headblock and empty spreader moving at maximum hoist speed and becoming snagged in the ship’s cell guide or structure, or two-blocking against the trolley. The mitigating effect of the reeving system anti-snag system is considered in determining the snag force. The maximum stresses are limited to 135 percent of AISC allowable values.

5) Dead load, trolley dead load, live load, lift system, operating wind load, and collision force.

Collision force is due to the full impact of the crane hitting its end stops or the bumpers of another crane, or of the trolley hitting its end stops, at rated speed but with the power off. The energy absorbing or deceleration characteristics of the bumpers are considered in determining the collision force. The maximum stresses are limited to 135 percent of AISC allowable values.

6) Dead load, trolley dead load, live load, lift system, and seismic load. The maximum stresses are limited to 135 percent of AISC allowable values.

7) For fatigue analyses: dead load, trolley dead load, lift system, average live load, and trolley lateral load. The stress range is defined as the algebraic difference between the maximum and minimum stress at a point during one load cycle.

Average live load is taken as 75 percent of the fully loaded container. One load cycle is defined as: hoisting the container from the pier, traveling the trolley and setting the container on the main deck of the ship, hoisting the empty spreader and traveling the trolley to the pier, and setting the spreader on a container. Alternatively, the reverse sequence may be used. For container terminals with no pier storage areas, trolley travel range is taken as 75 percent of the maximum outreach (measured from the waterside rail) to centerline of the gantry. For container terminals with pier storage of containers, trolley travel range is taken as 75 percent of the maximum outreach (measured as above) to 75 percent of the maximum backreach (measured from the land side rail). Secondary effects due to elastic deformation of the structure must be considered in this analysis. The maximum stress ranges are limited to 100 percent of AISC allowable values for Loading Condition 4 (that is, over 2,000,000 cycles).

8) For lateral deflection perpendicular to the boom: gantry lateral load. The lateral deflection perpendicular to the boom is limited to h/240, where h is the vertical distance from the rail to the connections between the main girders and the transverse girders.

9) For lateral deflection parallel to the boom: 300 percent of trolley lateral load. The lateral deflection parallel to the boom is limited to h/1400, where h is the vertical distance from the rail to the connections between the main girders and the transverse girders.

b) Entire Structure (Stowed Configuration). In this configuration, the boom is secured in its raised position, and the trolley is locked in its stowed location. Two load cases are considered:

1) Dead load, trolley dead load, lift system, and non-operating wind load. The wind load is applied in the most adverse direction. The maximum stresses are limited to 126 percent of AISC allowable values.

2) Dead load, trolley dead load, lift system, and seismic load. The maximum stresses are limited to 126 percent of AISC allowable values.

c) Other Structural Assemblies and Components. The machinery house, diesel engine-generator enclosure, operator’s cab, boom control station, stairs, walkways, platforms, and ladders are to be designed according to the criteria for similar assemblies and components of portal cranes, as described above in paragraph 5.1.2.4 and sub-paragraphs.

5.1.2.7 Mobile Cranes. Structural design criteria for mobile cranes are prescribed by Society of Automotive Engineers (SAE) standards and are observed by commercial firms that manufacture such cranes. They include analytical methods and non-destructive testing of the entire load-supporting structure of the crane under static conditions. The following SAE standards apply:

a) J1093; Latticed Crane Boom Systems – Analytical Procedure. Booms ratings developed according to this procedure must be verified by testing described in J987.

b) J987; Rope Supported Lattice-Type Boom Crane Structures – Method of Test. The test is performed on an instrumented crane and approximates the maximum loading conditions on all its structural components. The maximum allowable stresses and deflections are specified.

c) J1078; A Recommended Method of Analytically Determining the Competence of Hydraulic Telescopic Cantilevered Crane Booms. This standard serves as a supplement to J1063.

d) J1063; Cantilevered Boom Crane Structures – Method of Test. This test is similar in scope and methodology to J987.

5.1.2.8 Gantry and Semi-Gantry Cranes. These cranes, being similar to OET and underrunning cranes, are designed according to the criteria of CMAA #70 and CMAA #74, as applicable. Equalized ground-level travel truck frames are designed as portal crane components, but for the load cases of CMAA #70.

5.1.3 Stability. Since portal, floating, container, and mobile cranes are subject to overturning, a key design requirement is their margin of stability. ASME standards prescribe stability criteria for all these crane types. These are supplemented by additional stability requirements established by the NCC. Gantry and semi-gantry cranes have a relatively stable configuration, but their minimum margin of stability should be checked. The following stability requirements apply to the individual crane types and represent the minimum criteria. Other stability cases may be added if warranted by local operational conditions. Such additional cases may include removal of the boom (for maintenance), modification of the boom, variation of counterweight, or unique lifts.

5.1.3.1 Portal Cranes. The stability requirements defined below apply to straight-line rated cranes. For variably rated cranes, (cranes with variable hook capacity/radius ratings at some or all of their operating range), several hook load/radius combinations, at 5 to 10 foot increments, are to be used, in the stability cases defined below.

a) Roller Path Designs. For cranes with the upperworks on a roller path and king pin assembly, the distance from the center of rotation to the resultant of all forces in the plane of the roller path must be maintained within 90 percent of the roller path radius for two cases:

1) 130 percent of rated capacity on any hook at maximum operating radius.

2) No load on the hooks, boom at its minimum operating radius, and 80 mph non-operating wind from the front.

b) Rotate Bearing Designs. There are no stability requirements for the upperworks on rotate bearings, provided that the bearing moment-carrying capacity is not exceeded.

c) Entire Crane. The entire crane, of either roller path or rotate bearing design, is required to maintain overall stability for the following four cases. The resultant of all forces is translated to the plane of the tipping axis – either on the rails or through the main gudgeon pins. When the tipping axis is the

rail, the maximum detrimental combination of travel truck float and wheel flange clearance on the rail head must be included in the analyses.

1) 150 percent of rated capacity on any hook at maximum operating radius. Rotate positions with the boom in line and perpendicular to the rails must be considered. The resultant of all forces must be within the rails (track gauge) or between the main gudgeon pin axes, as applicable.

2) Rated capacity on any hook at maximum operating radius, and 40 mph operating wind from the rear of the upperworks. Rotate positions with the boom in line and perpendicular to the rails must be considered. The overturning moment must not exceed 77 percent of the stabilizing moment.

3) No load on the hooks and the boom at its minimum operating radius. Rotate positions with the boom in line and perpendicular to the rails must be considered. The resultant of all forces must be within 60 percent of the distance from the crane's center of rotation to either rail or either main gudgeon pin axis, as applicable.

4) No load on the hooks, the boom at its minimum operating radius, and 80 mph non-operating wind from the front of the upperworks. Rotate positions with the boom in line and perpendicular to the rails must be considered. The overturning moment must not exceed 80 percent of the stabilizing moment.

If the maximum wind gust velocity at the crane's location is greater than 80 mph, this case must also be applied to the crane in its stowed configuration, using maximum wind gust velocity.

5.1.3.2 Floating Cranes. The stability requirements defined below apply to straight-line rated cranes. For variably rated cranes, several hook load/radius combinations, at 5 to 10 foot increments, are to be used, in the stability cases defined below. For each case three rotate positions must be considered – boom forward, aft, and over the side. Boom angles are set to correspond to the required hook radii when the barge is level, before the effect of the actual maximum list and trim angles is applied.

a) Roller Path Designs. Except for the inclusion of the list and trim effects, the same cases as in paragraph 5.1.3.1.a are required for the upperworks.

b) Rotate Bearing Designs. There are no stability requirements for the upperworks on rotate bearings, provided that the bearing moment-carrying and radial capacities are not exceeded.

c) Entire Crane. For normal operation, the crane (barge) with or without the maximum deck load, with the upperworks in any position, with any load (up to rated capacity) on any hook at any radius within its operating range, and with the water ballast compartments full or empty, the barge must remain within the limits listed below. (The center of gravity of the deck load is assumed to be 5.0 feet above the level of the cargo laydown area.)

1) Maximum list of 2.5 degrees.

2) Maximum trim of 1.7 degrees.

3) Minimum freeboard of 2.5 feet at the lowest point, at combined list and trim angle.

4) Minimum transverse metacentric height (GM) of 35 feet.

5) Residual dynamic stability of not less than 15 foot-degrees between the curve of static stability and the heeling arm curve. This stability is taken between the healing arm equilibrium point (list angle) of maximum ordinate differences between the two curves, but not exceeding 40 degrees. (However, protection against downflooding is required to 40 degrees of heel.)

6) Sufficient dynamic stability to prevent capsizing in case of sudden loss of the hook load of any hoist, including test loads of 130 percent of rated capacity. Specifically, the righting arm area (foot-degrees) on the crane counterweight side must be adequate to absorb the energy imparted to the entire crane by the sudden loss of the rated hook load.

For overload tests with 130 percent rated capacity on any load hook, with no deck load, and with the most adverse upperworks rotate position and boom angle, the barge must remain within these limits:

7) Minimum freeboard of 1.0 foot at the lowest point, at combined list and trim angle.

8) Upper bilge tangent, adjacent to any flat bottom area, completely under water.

d) Towing Configuration. For towing, the boom is secured in the boom rest and there is no deck load. The water ballast compartments are used to obtain the required trim. For this towing configuration, three cases are considered:

1) Minimum freeboard of 5.0 feet.

2) For towing in protected waters, minimum trim of 2.0 inches down by the stern.

3) For towing on the open seas, minimum trim of 1.0 foot down by the stern.

5.1.3.3 Container Cranes. Five cases are considered for container crane stability in the operating (boom horizontal) and stowed (boom raised and secured) configurations.

a) Operating Configuration. Container cranes in their operating configuration must be analyzed with the trolley at its maximum outreach and maximum backreach. The resultant of all forces is translated to the plane of the tipping axis – either on the rails or through the main gudgeon pins. When the tipping axis is the rail, the maximum wheel flange clearance on the rail head must be included in the analysis. (Normally container cranes operate on straight track and have no travel truck float.) The resultant of all forces must be within 95 percent of the distance from the crane’s geometric center to either rail or the main gudgeon axis, as applicable. The following three cases are considered:

1) Dead load, trolley dead load, 200 percent of the live load (container weighing 89,600 to 112,000 pounds), lift system (head block, spreader, wire ropes, and sheaves), and 55 mph operating wind applied from either end and perpendicular to the boom.

2) Dead load, trolley dead load, live load, lift system, and collision force.

Collision force is due to the full impact of the crane hitting its end stops or the bumpers of another crane, or of the trolley hitting its end stops, at rated speed but with the power off. The energy absorbing or decelerating characteristics of the bumpers are considered in determining the collision force.

3) Dead load, trolley dead load, live load, lift system, and seismic load.

b) Stowed Configuration. In the stowed configuration the boom is raised and locked against the A-frame boom stops, the trolley is locked on the main beams near the land side gantry leg, but the gantry is not tied down. The resultant of all forces must be within 80 percent of the distance from the gantry's geometric center to either rail or the main gudgeon axis, as applicable. Two cases are considered:

1) Dead load, trolley dead load, lift system, and non-operating wind load.

2) Dead load, trolley dead load, lift system, and seismic load.

5.1.3.4 Mobile Cranes. Stability criteria for mobile cranes (and locomotive cranes) are detailed in ASME B30.5 and NAVFAC P-307, Management of Weight Handling Equipment; it addresses the margins of stability, determination of load ratings, and site conditions. Additional requirements for test apparatus, set-up, and test methods are provided in SAE J765. These standards are followed by the commercial manufacturers of mobile cranes. These cranes may be used at their full load ratings for all GPS applications. For SPS applications, various local restrictions (in the form of policies and procedures) are usually imposed.

5.1.3.5 Gantry and Semi-Gantry Cranes. There are no established/generally accepted stability criteria for these cranes. These cranes may be designed with either a load block and hook for general applications, or with a head block and spreader for container handling. (Semi-gantry cranes are not normally used for container handling.) The resultant of all forces is translated to the plane of the tipping axis. NCC considers three cases for each application.

a) General Applications. For cranes with a load block:

1) Dead load, trolley with rated hook load in any position on the bridge girders, and 40 mph operating wind applied perpendicular to the bridge girders. The resultant of all forces and moments must be within 70 percent of the distance from the crane's geometric center to the main gudgeon pin axis.

2) Dead load, trolley with no hook load in any position on the bridge girders, and non-operating wind load applied perpendicular to the bridge girders. The resultant of all forces and moments must be within 80 percent of the distance from the crane's geometric center to the main gudgeon pin axis.

3) Dead load, trolley with rated hook load in any position on the bridge girders, and collision force. The resultant of all forces and moments must be within the main gudgeon pin axes.

Collision force is due to the full impact of the crane hitting the end stops or the bumpers of another crane at its rated speed but with the power off. The energy absorbing and decelerating characteristics of the bumpers are considered in determining the collision force.

Note: In the case of semi-gantry cranes, the crane configuration is assumed to be that of a gantry crane (symmetrical to the gantry end of the crane).

b) Container Handling. Stability cases and stability requirements for cranes with a head block are identical to those in paragraph 5.1.3.5.a, except that the total weight of head block, spreader, and container is used in place of "rated hook load" and only the weight of head block is used in place of "no hook load."

5.1.4 Supplementary Design Features. Additional structural design features must be considered and included in the original design to enhance the safety, permit efficient field assembly, and ease the maintainability of cranes.

5.1.4.1 Accessibility Provisions. The sizing and configuration of accessibility structural items such as – stairs, handrails, walkways, platforms, and ladders – are governed by OSHA 29 CFR 1910 requirements. The OSHA requirements apply to all crane types. Some industry standards specify additional requirements, as in the case of CMAA #70. For cranes which do not have similar comprehensive design criteria for walkways and platforms, NCC specifies two load cases.

a) Dead load and distributed load of 50 pounds per square foot (35 pounds per square foot for boom walkways).

b) Dead load and a concentrated load of 350 pounds (250 pounds for boom walkways) in any location.

The maximum stresses for both load cases are limited to 100 percent of AISC values for the particular material. Other structural requirements of paragraph 5.1 for welding and bolting, also apply.

5.1.4.2 Test Weights. Cranes designed for handling of items (such as containers) or operating in controlled environments (such as ammunition magazines) usually have dedicated test weights for periodic load testing. In the case of container cranes, the test weight must be designed for engagement by the spreader twist locks to duplicate the operational loading of the spreader. Cranes operating in ammunition magazines are usually provided with compact, purpose-designed test weights to maintain order and neatness in the magazines. Dedicated test weights should be considered for other specialized crane operations.

It is recommended that the test weights be of all-steel or ductile cast iron construction. The design criteria limit the maximum stresses to 100 percent of the AISC allowable value or 35 percent of the cast iron yield strength.

5.1.4.3 Structural Assembly Standards. Common acceptance criteria for structural steel are established by ASTM A6, General Requirements for Rolled Structural Steel Bars, Plates, Shapes, and Sheet Piling. This standard addresses the permissible variations in the dimensional, chemical, and mechanical attributes of commercially produced structural steel. This material is acceptable for all structural components of cranes.

Field assembly and fit-up of large structural components invariably reveals misalignments at their interfaces that require some form of compensation. Quality Criteria and Inspection Standards, published by AISC, addresses typical problems encountered in fabrication and erection of steel structures. This publication addresses all problems related to fabrication and assembly of steel structures and provides commentary together with formal AISC recommendations. The scope includes:

a) Preparation of materials (purchased steel)

b) Fitting and fastening

c) Dimensional tolerances

d) Welding

e) Surface preparation and painting

f) Non-destructive examination

g) Special fabrication problems

NCC policy is to accept/apply the AISC recommendations for new crane procurements. Additionally, although this item is not addressed by AISC, on new cranes NCC policy is to accept filler plates at bolted butt joints, such as those between boom sections, portal base cap and legs, A-frame members, and other major structural joints. The minimum thickness of the filler plates is 1/4 inch, and only one filler plate is permitted per bolted butt joint.

5.1.4.4 Accessibility and Maintainability Features. The design of older portal and floating cranes restricts or complicates access to, or repair of, mechanical and structural components. For example, A-frames normally penetrate the machinery house roof, and are riveted to the machinery deck. This arrangement makes the task of A-frame removal a major maintenance operation. Furthermore, when an A-frame or another structural member is in close proximity to a hoist gear reducer cover, the internal components of the gear reducer cannot be readily inspected. NCC policy for new portal, floating, and container cranes is to require specific designed-in accessibility and maintainability features. The layout of the machinery house requires that the diesel engine-generator set be separated from the control (electrical) compartment and operator’s cab by the hoist machinery compartment.

This arrangement isolates the electrical equipment and operator from the noisy and oil/fuel contaminated power compartment. Specific design features include:

a) The boom is required to be comprised of sections of manageable lengths suitable for lifting. The boom walkway is required to be sectioned in the same manner. Platforms and ladders are required for access to both sides of all sheaves and sheave nest pins, and all lighting fixtures. The boom walkway must be accessible with the boom horizontal (or other specified maintenance position).

b) The A-frame connection to the machinery deck is required to be by means of structural pins and outboard of the machinery house. The A-frame front and back legs are also required to be pinned at their apex and a pinned brace installed between them to prevent their folding when lifted from the machinery deck. Stairs, ladders, and platforms are required for access to all sheave and pin maintenance points. Lifting padeyes are required to permit removal of the entire A-frame as a unit.

c) The counterweight is required to be all steel and pinned or interlocked with the main beams of the machinery deck. It is required to be segmented so that it can be reduced to maintain crane stability when the boom is removed. Each segment includes lifting padeyes for easy removal and reinstallation.

d) Roofs of the power and control compartments are required to be removable as one-piece units or in large sections. With either arrangement, the roof openings must be adequate to lift out the diesel engine-generator set, as a unit on its foundation, or any electrical control cabinet.

e) The roof over the hoist machinery compartment (underneath the A-frame) is required to include removable access hatches to facilitate removal of major hoist drive components (including the wire rope drums), rotate drives (preferably as complete units), and the collector ring assembly. The machinery house structure and the A-frame should be equipped with padeyes for maneuvering/transporting these components to the access hatches.

f) Complete hoist drives on their foundations are required to be removable after the removal of the A-frame and the hoist machinery compartment roof. The hoist drive foundations are required to include padeyes for this purpose.

g) Both ends of all internal and external rotate bearing bolts or studs must be accessible for tensioning and retensioning. The size of the hydraulic tensioners must be confirmed to ensure adequate space for their connection to the bolts or studs.

h) The top of the portal base and the underside of the machinery deck are required to include provisions for jacking-up of the upperworks and removal of the rotate bearing.

i) Travel truck drives are required to be removable (as a unit) from the travel truck frames. The preferred connection to the wheel axle is by means of a compression sleeve or a spline. If the wheel axle is pressed and keyed into a hollow output shaft of a gear reducer, the assembly must include provisions for pressing out the wheel axle.

j) Roof walkways and hand railings are required to be terminated at the lines of separation of the roof sections, and each is to be removable (by unbolting) from its roof section.

k) Interiors of large closed structural sections – such as portal bases, machinery decks, gantries, and container crane main beams or boom girders – are required to be accessible for inspection and maintenance. These accessibility provisions must include ladders, platforms, and lighting. Access hatches must be weathertight, openable from both sides, and with shielded grills for ventilation.

5.2 Structural-Mechanical. There are no industry standards for structural-mechanical components. The following criteria have evolved from successful crane designs administered by NCC. Deviations from these criteria are prohibited, unless approved by NCC. The connections at interfaces of structural and mechanical components are governed by the less stringent criteria of the two. (For example, sheave and equalizer pins must comply with the mechanical design criteria, but their seats and supports on the boom may follow the structural design criteria. On either side of the interface, the appropriate design criteria of Section 5.1 or Section 5.3 applies.)

Additional design criteria for unique structural-mechanical components are given below.

5.2.1 Equalizer Bars and Bar Frames. Equalizer bars and bar frames (for equalizer bars and sheaves) are designed according to the structural criteria; the pivot pins and their bushings, including lubrication and retention provisions, are designed according the mechanical criteria.

Wire rope fitting connections (padeyes) are designed to fit the pin and clevis opening, without any bushings. The external dimensions of the padeye are governed by the mechanical design criteria.

5.2.2 Boom Hinges. Boom hinges are arranged to allow the boom to be lowered to its horizontal (maintenance) position and are designed to withstand the lateral loads imposed on the boom by side pulls, wind, and rotational acceleration and deceleration of the upperworks. Older crane designs traditionally spaced the two boom hinges at 1/12 of the boom length to limit the loads on the boom hinges and the boom structure. Newer crane designs, utilizing advanced stress analyses, generally use a lesser spacing with a high degree of confidence in the validity of the obtained load and stresses.

Accurate alignment of the boom hinges is of critical importance. The boom assembly, machining techniques, and its installation on the machinery deck must ensure that the two hinge assemblies are aligned on a common centerline. The bushings may be pressed into the boom foot structure or into the support padeyes. Bushing flanges or separate thrust washers are required between the boom feet and the padeyes. Grease grooves are machined in the bushing bores in a pattern that ensures delivery of grease to the heavily loaded locations with the boom at any

angle. The hinge pins are required to be forged steel and retained on both ends at the padeyes. Other, functionally equivalent, arrangements may also be used. Mechanical design criteria apply to the bushings; structural design criteria apply to the hinge pins. Additionally, the pin hardness should be not less than 300 BHN and at least 100 points harder than the bushing material.

Commercially available specialty bushings and plain spherical bearings, some with low friction coefficient lining material, may be used when approved by NCC. These items may be used at their full published ratings.

5.2.3 Fleeting Sheave Pins. These pins are intended to allow easy fleeting (sliding) of slowly rotating sheaves mounted on bushings. The pins are usually mounted in the A-frame as a structural member. The surface of the pins must be treated in some way to give it a low friction coefficient and make it immune to corrosion. The common practice is to plate them with chrome over nickel. Alternatively, the pins may be made of corrosion resistant steel selected for adequate strength and low friction coefficient.

Unlike most structural members, these pins are mounted on widely spaced supports and sized to limit their deflection under a transverse load. The pins are never drilled for grease passages because the fleeting sheave bushings must be lubricated through sheave hubs. The maximum bearing pressure is limited to 1000 psi on the projected area. In most practical applications, design criteria which determines the bushing bore, leads to a satisfactory pin diameter.

5.2.4 Center Steadiments. The upper and lower tubular sections of the center steadiment and their bushings are designed for transverse loads due to the rotate gear forces, wind, and in case of floating cranes – force components caused by list and trim of the barge. The full magnitude of the loads is assumed to be applied to the steadiment assembly, with no consideration of any mitigating effects of friction on the roller path rollers. The bushing is sized to limit the maximum bearing pressure to 1000 psi on the projected area and its ends should be slightly relieved (over 10 percent to 20 percent of its length) to avoid excessive edge loading due to angular misalignment under load. On older cranes it was common practice to use a drywell with oil lubrication; on newer cranes with center steadiments, the bushings are grease lubricated.

5.2.5 King Pins. King pins are machined from heavy wall structural tubes or bored forgings. (The open center is required for routing of electrical wiring.) The upper end is retained with a nut or a shoulder that seats directly on the upper steadiment section or is mounted in a trunnion arrangement, and the lower end is retained with a locking nut with a gap of approximately 1/4 inch at the face of the lower steadiment section. The trunnion mounting is recommended because it precludes introduction of possible bending in the king pin when the machinery deck tilts with respect to the portal base or tub under heavy loading. The gap above the locking nut is intentional; when present at its original setting, it confirms the proper balance/stability of the rotating structures.

One end of the king pin is mounted in a bushing to maintain its alignment with the center steadiment assembly. This bushing is subjected to only nominal loads and has no particular design requirements, other than providing grease lubrication. The king pin and its nuts and trunnion, must be sized to comply with the mechanical

design requirements when a fictitious load of 150 percent of rated load is placed on the main hoist hook at maximum radius. For cranes with variable rating, 150 percent of the maximum operating moment is applied.

5.2.5.1 Trunnion Mounting. Trunnion mounting of the king pin is recommended, but is mandatory only when specified. The upper end of the king pin is connected to a horizontal pin whose ends are seated in the trunnion bores. The trunnion bores may include bushings and grease lubrication, but these features are not mandatory. The entire trunnion assembly and its mounting fasteners must be sized to comply with the mechanical design requirements for the fictitious 150 percent load described above. Both ends of the horizontal pin must be secured with keeper bars.

5.2.5.2 Locking Nuts. The lower end of the king pin is threaded for the locking nut that is intended to prevent separation of the upperworks from the portal base or tub in case of unintentional overload on the load hooks. In normal service, within the crane’s entire operating range, the gap above the locking nut should never close to allow the locking nut to contact the lower center steadiment section. The locking nut must have provisions for securing it against rotation and the gap dimension under a particular load condition must be recorded. The threads must be sized to comply with the mechanical design requirements for the fictitious 150 percent load described above.

5.2.6 Roller Paths. Upper and lower roller paths must be mounted on supporting structure (in the form of circular or octagonal girders) with intermediate circular steel shim plates for continuous support of the roller path segments. The shim plates should be wider than the roller path segment flanges and continuously welded to the supporting structure. The shim plates are intended to serve as surfaces for machining to obtain a level mounting surface for the roller path segments. The machined mounting surface is required to be level within 1/32 inch (plus or minus) in 12 linear feet. The entire supporting structure arrangement must be of high and relatively uniform rigidity. Roller path segments, either in the form of bent rail or machined castings, must be secured against rotation or shifting in any direction with welded rail clips, welded studs, or through bolts. Rail clips should be standard commercial items and should be welded directly to the shim plates in accordance with the manufacturer’s instructions. The welded studs must be installed on the supporting structure (through enlarged holes or gaps in the shim plates) per the applicable criteria of AWS D1.1; likewise, their nuts must be torqued to the values given in AWS D1.1. Through bolts must be installed in accordance with the AISC Manual of Steel Construction.

Alternatively, if the roller path segments are cast, they may be embedded in an epoxy resin which is poured between the roller path segments and the support structure. Using this method, the shim plates are omitted; instead, the machined running surfaces of the roller path segments are used for accurate leveling prior to pouring the epoxy resin. The selected epoxy resin must be poured (installed) in accordance with all recommendations of its manufacturer. Typical installations require metal dams inside and outside the roller path and temporary rods through the bolt holes. The width of the roller path segment base and the compressive strength/creep characteristics of the epoxy resin must be matched, considering maximum roller loads and tension in the mounting studs or bolts. In this case, studs and bolts should be tensioned according to the epoxy resin manufacturer’s recommendations, since the epoxy resin possesses substantial bonding strength but does not have the compressive strength of steel.

The number of lower roller path segments should be limited to between 12 and 18, and the upper segments should be of different length to avoid simultaneous alignment of all upper and lower joints during rotation. Cast segments should be alloy steel hardened to a minimum of 225 BHN and their joint faces should be angled from the radial direction. Bent rail segments should be of standard commercial rail sections connected with standard railroad type of joint splice hardware.

5.2.6.1 Maximum Roller Load. In determining the maximum roller load, it is assumed that the resultant of all loads from the upperworks is applied to the centroids of the front (boom) or rear (counterweight) quadrants of rollers. The loads in each quadrant are divided equally among the rollers in that quadrant. Both the front and rear quadrant roller loads must be calculated. The load cases for straight line rated cranes are:

a) Rated load on the main hoist load hook at maximum radius;

b) No load on any hoist load hook and the boom at minimum radius.

For variably rated cranes, other load cases must also be analyzed to determine the highest roller load of either quadrant within the full operating range of the crane.

The minimum roller diameter is determined using the following equation:

EQUATION: $$MRL = K*W*D \qquad (4)$$

Where

MRL = maximum roller load (in pounds) that is imposed on the roller
K = dimensionless sizing factor (1200 for bent rail; 1440 for cast alloy steel)
W = effective width of the running surface; which is the width of the rail head top minus the corner radii, or the flat machined surface between the corner chamfers – (in inches)
D = roller tread diameter – (in inches).

5.2.6.2 Bull Gears. The bull gear, whether separate from or integral with the roller path is comprised of fitted spur gear segments. The gear teeth on older cranes are often relatively crude – either as-cast or cast and semi-finished by hand. However, because of the slow rotational speeds of 1/3 to 1/2 revolutions per minute, the operation is satisfactory even if noticeably rough. The teeth may be external or internal, but they are always exposed to the weather. On newer cranes, NCC policy is to require the segments to be cast alloy steel with gear teeth machined to ANSI/AGMA 2000, Gear Classification and Inspection Handbook – Tolerances and Measuring Methods for Unassembled Spur and Helical Gears (Including Metric Equivalents), Quality Number Q6 accuracy and with provisions for accurate alignment between the segments and with the center steadiment. The maximum stress anywhere on the segments is limited to 35 percent of the material yield strength at maximum design load condition. NCC, in order to simplify roller path and gear segment alignments and obtain the best possible mounting accuracy, recommends that the bull gear be integral with the roller path.

5.2.7 Rotate Bearings. Rotate bearings are precision assemblies produced by a limited number of manufacturers who specialize in this field. There is a wide variety of rotate bearing types, each optimized for the intended application. Crane rotate drives are among the most severe applications and require bearing designs with the highest load carrying capacities in downward, upward, and radial directions.

The bearing selection procedures are outlined in the manufacturer's catalogs. Each row of rollers and the ring gear must be analyzed for the corresponding design loads. The static capacity of each row of rollers must be at least equal to 125 percent of the maximum imposed load. The L-10 life (dynamic capacity) of each row of rollers must be at least 10,000 hours with a representative (average) load of 85 percent of the maximum load condition. The rotate bearing and mounting fasteners must comply with the ultimate strength design criteria in API Specification 2C.

The mounting hole pattern is usually uniform – with the holes equally spaced; however, non-uniform patterns may be specified if required for specific loading conditions. The split bearing races have straight (unthreaded) holes; the one-piece ring gear races may have straight or threaded holes.

5.2.7.1 Ring Gears. The ring gear bending strength rating, per the applicable AGMA standards, must be at least 125 percent of the maximum load imposed by the rotate drive or swing lock pinion mesh. The calculated bending strength rating is based on equal load sharing between the multiple rotate drive pinions in the drive mode and equal load sharing between them during the braking mode. The larger of the two loads governs the required strength rating of the ring gear. The ring gear teeth are spur type per ANSI/AGMA 2000, Quality Number Q6 accuracy, or better, and machined in the one-piece bearing race.

5.2.7.2 Mounting Fasteners. Rotate bearing manufacturers specify bolts or studs of higher strength than those used for structural connections. The grade of steel is usually equivalent to that of ASTM A490 bolts or SAE J429 (Grade 8) threaded fasteners. These fastener requirements must be observed, regardless of any other structural specifications. Likewise, the prescribed fastener pre-load criteria must be followed. NCC policy is to require the "direct tension" installation of fasteners, which is recommended by the rotate bearing manufacturers. The particular advantage in using direct tensioning is that only pure tensile stress is applied to the fastener, without any torsional shear which is substantial but unavoidable with the common torquing methods. Direct tension devices, because they grasp the threaded ends of fasteners, require longer threaded sections than is standard on structural bolts. It is, therefore, necessary to use custom made bolts or studs for these applications. If the batches are sufficiently large, it is practical to have the threads rolled. For small batches and for replacement bolts, the threads are normally cut. Although the rolled threads are preferred because of their better grain flow pattern, both thread types are treated identically in design calculations.

Studs or bolts may be used in smooth (unthreaded) mounting holes. For threaded mounting holes, to accommodate direct tensioning, only studs may be used. The mounting hole thread length is determined by the bearing manufacturer and is adequate for the specified fasteners. With either type of fastener, the nuts must be of comparable strength.

Bolts and other fasteners must be tensioned to the stress level specified by the bearing manufacturer. Usually, this value is 70 percent of the fastener material yield strength. Furthermore, the tension in the bolts and other fasteners must be checked periodically to ensure that no relaxation has taken place due to contact surface seating. The initial check is usually after six months of normal crane operations following the initial tensioning. Subsequent checks are less frequent – usually once a year for several years and then once every three to five years. During such tension checks the amount of additional applied tension, as gauged by nut rotation, should be recorded and the frequency of ensuing checks adjusted accordingly until no further seating is evident.

5.2.7.3 Fastener Sizing. The maximum tensile load imposed on any mounting fastener is calculated by the following method, derived from American Petroleum Institute Specification 2C:

EQUATION: $$P = (4M/ND) - (H/N) \qquad (5)$$

Where

P = fastener tensile load – (in pounds)
M = maximum overturning moment – (in pound-feet)
N = number of fasteners
D = bolt circle diameter of the fasteners – (in feet)
H = total axial load – (in pounds)

Mounting fasteners should be equally spaced over the entire bolt circle diameter. The fasteners must be sized to provide a higher installation pre-load (installation tensioning) than the value of “P”.

5.2.8 Maximum Wheel Load (Portal Cranes). The determination of maximum wheel loads of portal cranes involves a statically indeterminate problem. There are several valid methods to obtaining the solution, depending on which simplifying assumptions (such as, condition of the rail system and the portal base structure) are invoked, and the differences between them are not great. The traditional Navy procedure followed for older and newer portal cranes is commonly referred to as the “beaming method.” The essential element of all these methods is the calculation of the maximum corner load imposed on the portal base by the most adverse loading condition. The maximum corner load occurs when either the boom (with rated load at maximum radius) or the counterweight (with no load on the boom at minimum radius) is approximately at right angles to the diagonal between the adjacent corners. The system of equalizers serves to distribute the corner load equally among all the wheels in each corner of the portal base. The maximum wheel loads calculated by the beaming method are taken as the loads that may not exceed the allowable loads at the assumed spacing for which the rail system was designed.

Secondary effects, such as wind or impact are not included in this value. The inherent rail system design safety margin is understood to be sufficient for tolerating extraneous secondary loads without any degradation of its strength.

The accepted practice in rail system design is to assume 4-foot spacing for the wheels. For this assumption, the maximum wheel loads of the crane must be reduced proportionally for closer wheel spacing, but they may not be increased for wider spacing.

5.2.8.1 Beaming Method. The beaming method is described in Electric Cranes, H.H. Broughton, (London, 1958). It assumes that the weight of the portal base is distributed equally among the four corners (unless there is a significant eccentric load, which can be readily taken into consideration) and that the off-center load from the upperworks is resolved into moment components about the lateral and longitudinal axes. The relative magnitudes of the moment components vary sinusoidally as a function of the orientation of the upperworks. The maximum wheel (corner) load is reached when the sum of the two moment components reaches its maximum value.

For a square portal base, the maximum wheel load occurs when the boom axis is directly over the corner. For a rectangular portal base, the maximum wheel load is reached when the boom axis is normal (or nearly normal) to the portal base diagonal. Figure 24 shows in graphic form the variation of the wheel load through one quadrant of rotation as a function of upperworks orientation and hook radius (moment) for a typical portal crane with a rectangular portal base. It is important to note that for some radii the maximum allowable wheel load for the rail system is exceeded as the upperworks rotates over the corner; and in order to remain within the allowable wheel load, the hook radius must be reduced (the boom raised) before rotating over the corner. (The dashed line in Figure 24 shows this path.) If the counterweight is excessive, it may generate the maximum wheel loads when the empty boom is at minimum radius; in which case the boom will have to be lowered to reduce the corner load if the maximum allowable wheel load of the rail system is being exceeded.

The maximum wheel load calculated by the beaming method is used to determine the governing load for the design of the portal base structure and all structural-mechanical components below the main gudgeon connection and the selection of wheel diameter. In the case of older cranes with idler wheel driven travel trucks, the maximum wheel load also governs the design of travel truck gearing, bearings, and axles.

5.2.8.2 Formal Presentation of the Beaming Method. The following subparagraphs paraphrase (for consistency of terminology) the description of the beaming method, titled “Truck wheel-pressures under slewing load” from H.H. Broughton’s Electric Cranes.

Figure 25 represents the portal base of a portal crane having a main gudgeon spacing “a” and a gauge “b”. The portal base (including the travel truck system) weighs “W_g” which weight acts centrally at the point “O”, and the upperworks, pivoted at “O”, and weighing “W_u” has as its center of gravity the point “S” which is a distance “l” from the center of rotation. The angle of inclination of the plane of the boom “OE” with respect to the axis “hf” is “ ”, and the coordinates of the point “S” referred to the two axes “CD” and “BC” are: $x + (a/2)$ and $y + (b/2)$, respectively. To find the load A on crane corner “A” due to the weight of the upperworks, first take moments about point “Q” and find $P = W_u\{x + (a/2)\}/a$. (P is the reaction at point “P” due to W_u, if W_u were located at points “S” on an imaginary beam between Points “P” and “Q”.) Next take moments about point “B” to obtain load $A = P\{y +(b/2)\}/b$. To this load has to be added $W_g/4$ due to the weight of the portal base. Evidently the load on any crane corner for any angle “θ” can be determined in the same way.

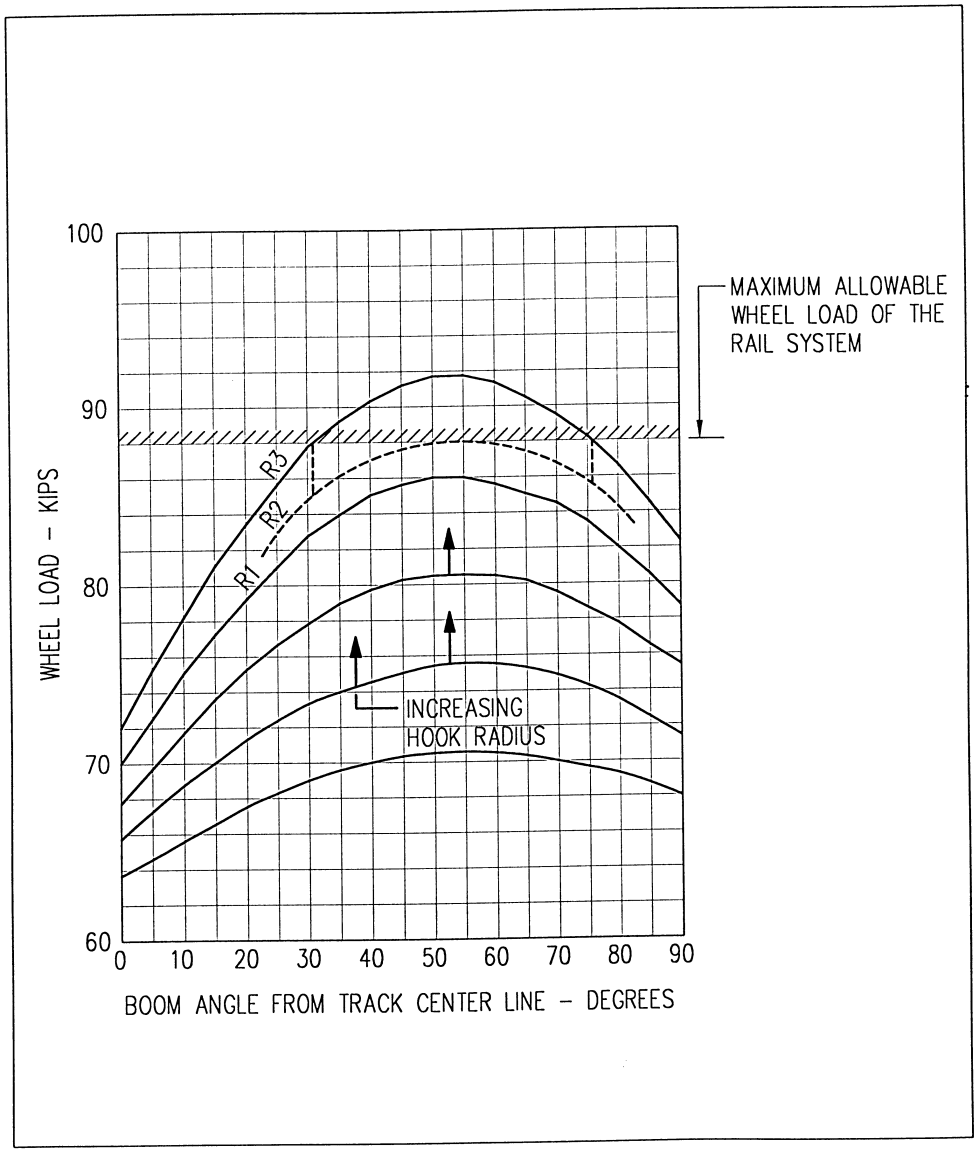

FIGURE 24
VARIATION OF WHEEL LOAD THROUGH A QUADRANT OF ROTATION

Putting $x = l\cos\theta$, and $y = l\sin\theta$, the equations for the several crane corner loads are:

EQUATION

$$A = Wg/4 + Wu/4\ [1+(2l\cos\theta)/a][1+(2l\sin\theta)/b]$$

$$B = Wg/4 + Wu/4\ [1+(2l\cos\theta)/a][1-(2l\sin\theta)/b]$$

$$C = Wg/4 + Wu/4\ [1-(2l\cos\theta)/a][1-(2l\sin\theta)/b] \qquad (6)$$

$$D = Wg/4 + Wu/4\ [1-(2l\cos\theta)/a][1+(2l\sin\theta)/b]$$

The relationship between the load A on crane corner “A” and angle of inclination “θ” is shown plotted on polar coordinates in Figure 26 and from this it will be noted that the load “OP” is a maximum when the boom is at right angles to the diagonal “BD”, that is when $\tan\theta = a/b$. Although the boom directly over main gudgeon “A” is often assumed to give the maximum crane corner load, this is true only when the gudgeon spacing is equal to the gauge. Extending the vector “PO” to “Q” gives “OQ” as the minimum load on crane corner “A” which occurs when the boom is rotated through an angle of 180 degrees from “OP” to “OP_1”.

5.2.8.3 Moment of Inertia Method. This method assumes the crane rails to be perfectly level and rigidly supported, and yields maximum wheel load that are about 8 to 10 percent lower than those obtained by the beaming method. Since the actual condition of crane rails does not justify such assumptions, this method of determining the maximum wheel loads is not used in the design of Navy portal cranes.

5.2.9 Travel Truck Systems. The equalizers, gudgeons, gudgeon pins, float pins, and travel trucks are designed according to the structural design requirements for the following load combinations:

a) Dead load plus main hoist rated load - both multiplied by an impact factor of 1.25, 40 mph wind, acceleration forces due to rotate and travel motion, and spreading or squeezing forces. The travel truck float and wheel positions are taken in their most adverse inward or outward locations. The upperworks and boom are positioned to produce the maximum corner load. The maximum stresses are limited to 85 percent of AISC allowable values.

b) Dead load and non-operating wind load – from the front, rear, or side – with the boom at the specified radius. The upperworks are positioned with the boom in the specified direction. The maximum allowable stresses are limited to 133 percent of AISC allowable values.

c) For fatigue analyses, the maximum allowable stress range is limited to 100 percent of the AISC allowable values for Condition 2 (that is 100,000 to 500,000 cycles). The larger of the following two stress ranges is to be used:

1) Dead load with the boom at minimum operating radius and with no hook load. The stress range is defined as the algebraic difference between the stresses due to: (a) the counterweight positioned to produce the maximum corner load, and (b) the boom positioned to produce the minimum corner load.

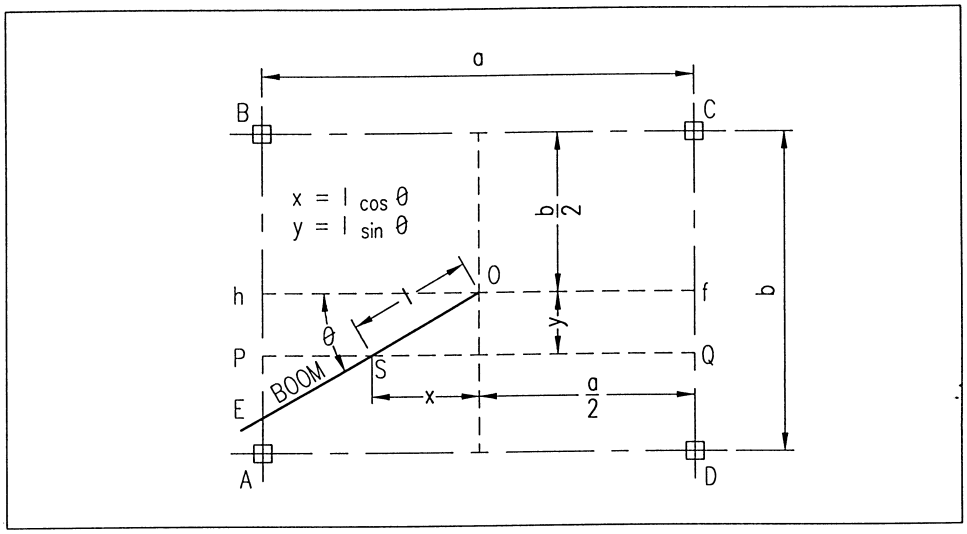

FIGURE 25
BEAMING METHOD MODEL

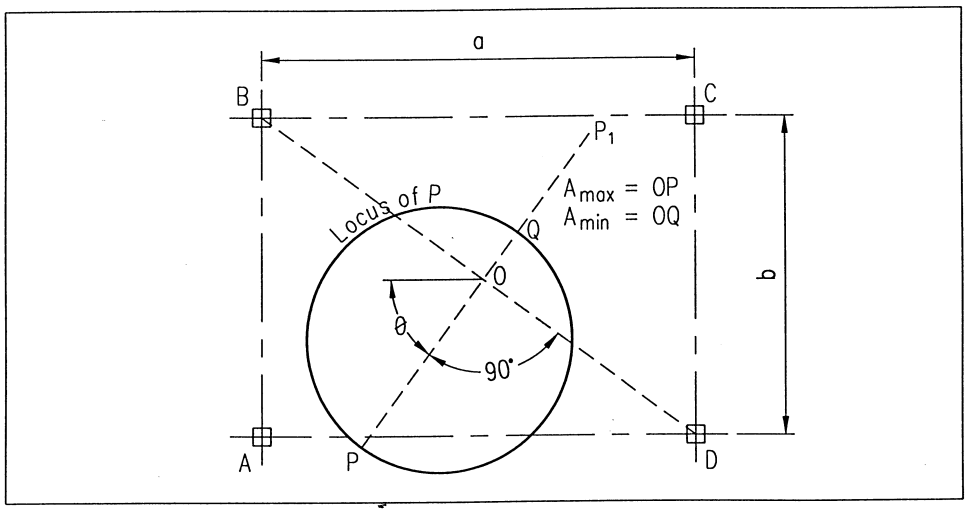

FIGURE 26
RELATIVE VARIATION OF CORNER LOAD DURING FULL ROTATION

2) The stress range defined in paragraph 5.1.2.4 a) (3), for the main hoist only. The upperworks and boom are positioned to produce the maximum corner load.

The sizing of gudgeons, gudgeon pins, and float pins is determined by the associated bushing design criteria. In the usual practical design situations, the sizing of these components is governed by the mechanical design criteria of the mating bushings, thrust washers, and thrust bearings.

5.2.10 Gudgeon Thrust Washers and Thrust Bearings. The design load for these components assumes only the direct vertical loads. (The effects of moments and horizontal loads are assumed to be taken up by the pairs of bushings on individual gudgeons.) The governing design load for each thrust washer or thrust bearing is determined by the maximum load obtained from paragraph 5.2.9 above.

5.2.10.1 Thrust Washers. Gudgeon thrust washers are required to be submerged in an oil bath to ensure an oil film on the rubbing surfaces with minimal relative motion. The maximum bearing pressure is limited to 2000 pounds per square inch, based on the net face area (face area minus the area of the oil grooves). The recommended oil groove pattern is a set of three or four intersecting circular grooves. The thrust washers should be flat and at least 3/4 inch thick. The oil grooves should be 1/4 inch wide by 1/8 inch deep, and without sharp edges. The mounting of the thrust washers should be by means of countersunk screws, secured against loosening. The thrust washer rubbing surface may separate from its steel contact surface during lift-off conditions. The recommended material for thrust washers is high-leaded bronze, conforming to Copper Alloy UNS Number 93200.

Thrust washers of non-metallic materials may be used only when approved by NCC. Compared to copper alloys (bronzes), these materials have lower allowable bearing pressures and lower friction coefficients, and usually require no lubrication.

Thrust washers which serve only to separate adjacent surfaces of equalizers and gudgeon assemblies (in the absence of bushing flanges) may be of any high-leaded bronze. Maximum bearing pressure due only to maximum lateral load obtained from paragraph 5.2.9 above, is limited to 50 percent of the material yield strength. However, the difference between the inside and outside diameters must be at least 6.0 times the wall thickness of the adjacent bushing. The minimum thickness of these thrust washers should be equal to the wall thickness of the adjacent bushing. These thrust washers are free to spin and do not require any lubrication.

5.2.10.2 Thrust Bearings. Gudgeon thrust bearings are required to be of either the spherical roller type or three-row roller type. The installation of spherical roller type thrust bearings must maintain the races in contact with the rollers during lift-off conditions; any separation may take place only at the seating surfaces of the races. The three-row roller type bearings consist of three independent rows of rollers specifically designed for thrust loads, overturning moments, and radial loads. Bearing selections must be made on the basis of their static capacities. The bearing manufacturer’s mounting and installation criteria must be followed. Manufacturers of the three-row roller type bearings specify the required sizes and grades of mounting fasteners. For tapped hole connections, the tapped holes must be made in the bearing rings. Thrust bearings must either be submerged in an oil bath or be grease lubricated.

Rolling element bearings are not ideally suited for travel truck swiveling because of the limited amount of rotation and the resulting tendency for brinelling at the roller contact points on the races. However, their low resistance to rotation reduces the loads and wear on the travel wheel flanges. For those reasons, rolling element bearings are common in such applications, but they must be selected conservatively and must include any additional design factors that may be recommended by their manufacturer for this application.

5.2.11 Gudgeon and Gudgeon Pin Bushings. These bushings, designed as paired sets, are sized for the highest combination of all horizontal loads and reactions due to the load combinations of paragraph 5.1.2.4.b above. The maximum bearing pressures are based on the net projected areas. The wall thickness is required to be at least 1/6 of the finished bore but need not exceed 1.00 inch. The grease grooves are required to be a minimum of 1/8 inch deep, 1/4 inch wide, and terminate 3/8 inch from the end of the bushing. The edges of the grease groove must be rounded to 0.005 to 0.015 inch radius. (The edge radius may be ignored in calculating the net projected area.) The bronze castings must comply with ASTM B148, Aluminum Bronze Sand Castings; B271, Copper-Base Alloy Centrifugal Castings; B505, Copper-Base Alloy Continuous Castings; or B584, Copper Alloy Sand Castings for General Applications; and the casting process must ensure a homogeneous distribution of the alloy elements.

For bushings on the gudgeons (vertical axis), maximum bearing pressure is limited to 10 percent of the bushing alloy yield strength. The recommended material for these bushings is heat treated aluminum bronze, conforming to Copper Alloy UNS C95400.

For bushings on the gudgeon pins (horizontal axis), maximum bearing pressure is limited to 20 percent of the bushing alloy yield strength. The recommended material for these bushings is high-leaded tin bronze, conforming to Copper Alloy UNS C93200.

5.2.12 Travel Truck Float. The need to negotiate sharp turns around heads of drydocks introduces distortions to the steering/travel geometry of the travel truck system that can be accommodated only by a unique design feature commonly referred to as “float” – the ability for the travel trucks to shift laterally within their gudgeon assemblies. The amount of float is determined by combining the geometric effects of increased effective gauge between opposite travel trucks on the curve (because their straight-track common axis pivots with respect to the radius of the curve) and because the different “heights” of the opposite circular segments of travel truck frames and equalizers on the inner and outer rail curvatures. Figure 27 demonstrates these effects graphically for a 32-wheel portal crane.

Installed crane rail systems consider these detrimental effects and provide partial compensation by reducing the rail gauge in the curves. Nonetheless, such reduction cannot fit different travel truck configurations and float is always required. The typical crane designs have from 1.0 to 3.0 inches of float to either side of each travel truck. The gauge of the main gudgeons should be selected so the amount of float inward and outward is approximately equal. The maximum available float and the maximum travel wheel flange-to-rail clearance must be included in the design of the system and the portal base. The calculation of required float is a

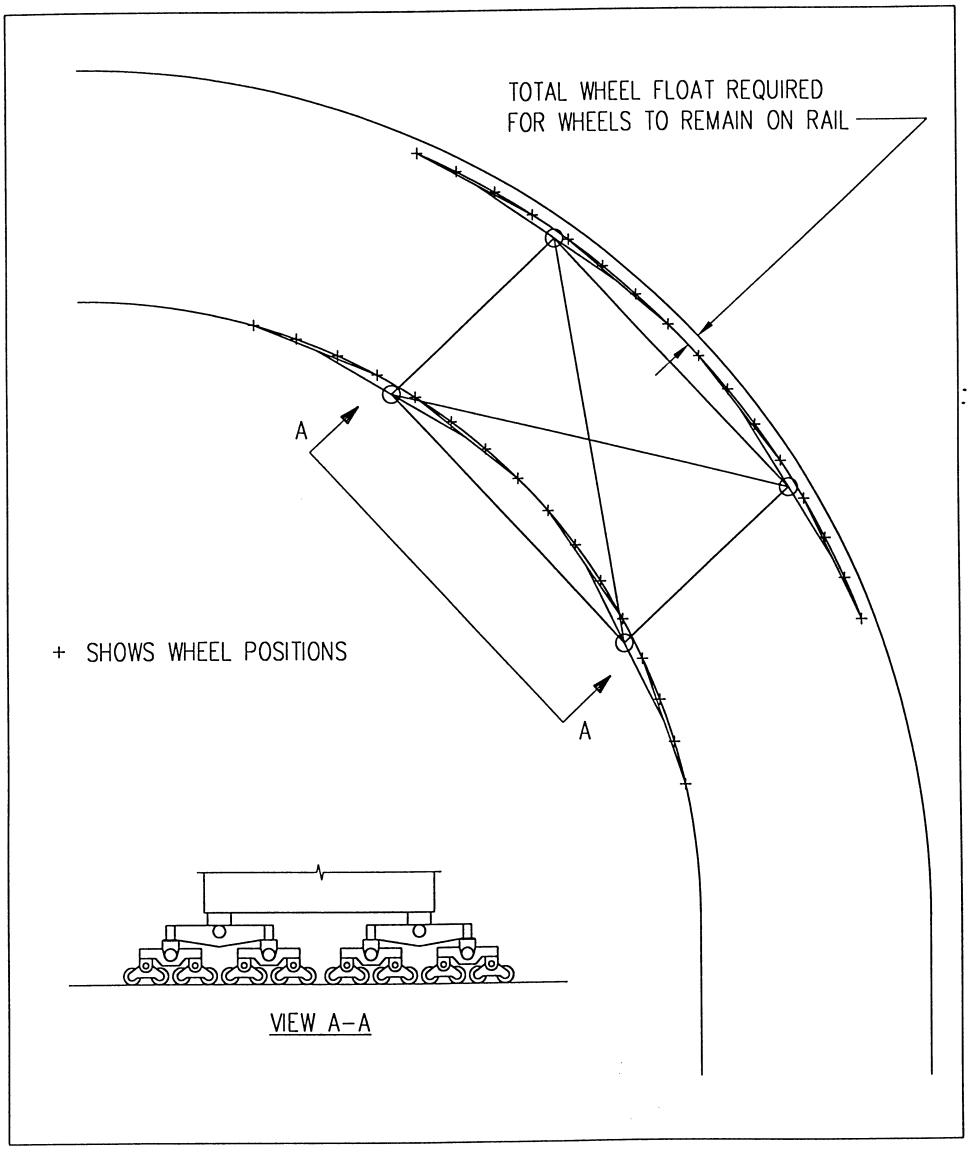

FIGURE 27
PORTAL CRANE TRUCK FLOAT

complex process which must be performed or approved by NCC for all new crane designs. As a practical matter, the amount of float on existing cranes on a particular crane rail system is a logical point of reference in establishing float requirements.

5.2.13 Float Pin/Bushing Assemblies. These assemblies are exceptionally sensitive to design details for proper operation. They are subjected to severe bending moments with edge loading on the bushings and exposure to the weather. The friction forces developed on their sliding surfaces determine the magnitude of the lateral (spreading/squeezing) loads and moments that are imposed on the entire travel truck system and the portal base structure. One means of minimizing such loads is to locate the float pins at the lowest level – in the travel truck frames. It is also critical that the friction coefficient be maintained at the design value. The design details of float pin installations described in this handbook have proven to be successful and must be followed for new crane designs unless permission for deviation is given by NCC.

5.2.13.1 Float Pins. Float pins have longer unsupported spans than rocker pins and are expected to have noticeable deflection (bowing) under load. There is no particular limit on deflection, and in practice the pin diameter is defined by the float bushing design considerations. They should be machined from solid steel with a hardness of at least 300 BHN and with a 63 micro-inch (or smoother) surface finish on the diameter. Particular care must be taken to avoid any machine lead on the sliding surface.

5.2.13.2 Float Bushings. Float bushings must be sized to limit the bearing pressure in the bore (base on the net projected area) to a maximum of 1500 pounds per square inch. Each bushing must have two independent grease groove patterns – one for the loaded surface, and one for the unloaded surface. (The area of the grease grooves, excluding edge chamfers or radii, in the center quadrant of the loaded surface is subtracted from the total projected area to obtain the net projected area). Grooves on the loaded surface must have sufficient area to lift the float pin and lubricate the adjacent surface with grease under pressure of 8000 pounds per square inch. Grooves on the unloaded surface are intended only to fill the clearance space with grease to preclude infiltration of water.

The eccentric loading due to float and travel wheel flange-to-rail clearance and the lateral spreading/squeezing forces, cause moment loads that either increase or decrease the nominal bearing pressure on the float bushing bores. The bearing stress distribution is further influenced by edge loading that develops at the end of the bushings. The combining effects of these stresses and influences on a typical float pin/bushing assembly is represented graphically in figure 28. Float bushing material is required to be a high-leaded tin bronze, copper alloy UNS Number C93700, with a bore surface finish of 63 micro-inches or smoother. Thrust washers should be of the same material as the bushings.

The expected deflection of the float pin, although not usually calculated, is taken into account by providing a generous bore-to pin clearance of 2.0 to 3.0 times that of the medium running fits (RC5 or RC6 of ANSI B4.1) for the same diameter.

5.2.14 Wire Rope Pendants. Wire rope pendants, used as stationary structural components, are assembled from 6x37 or 6x19 classification wire rope, and end

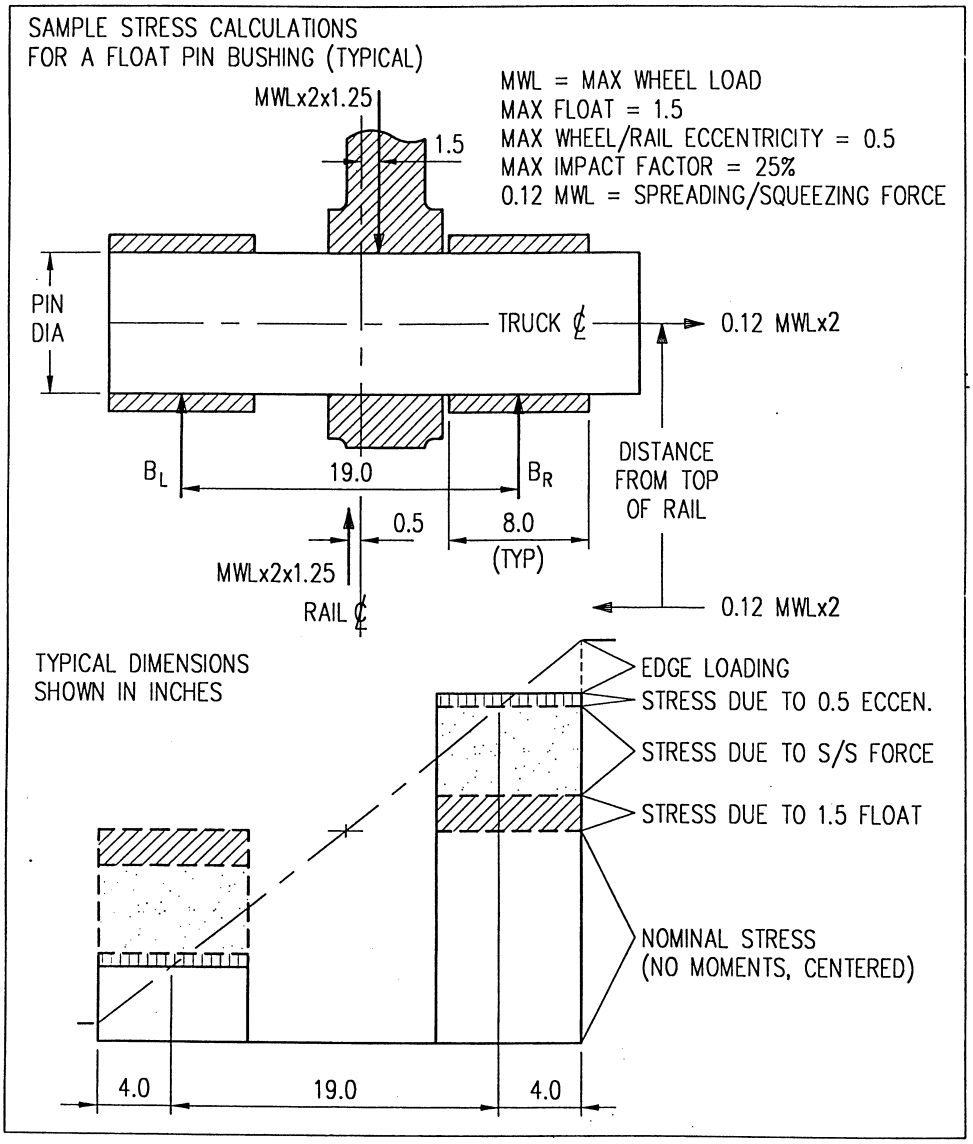

FIGURE 28
CROSS SECTION OF ASSEMBLY (AT MAXIMUM FLOAT)

fittings. The wire rope may be either improved or extra-improved plow steel, bright (non-galvanized) or coated (galvanized), regular lay, with an independent wire rope core, and in all other respects in full compliance with Federal Specification RR-W-410 or Wire Rope Users Manual. (This specification has been accepted by the wire rope manufacturers as the industry standard.) Galvanized wire ropes are well suited for non-flexing applications and the mildly corrosive conditions of outdoor environments, but their breaking strength will be reduced by up to 10 percent compared to that of the bright wire rope of the same diameter. The required minimum design factor for wire rope pendant assemblies is 4.0, based on the wire rope nominal breaking strength, and the dead and rated loads.

5.2.14.1 Pendant End Fittings. The end fittings must be installed as described in detail in paragraph 5.3.13.2. Ends of old galvanized wire rope, however, must be treated with muriatic acid long enough to remove the zinc coating. Swaged fittings are preferred on pendants because the wire rope cross section, although compressed, retains its original construction inside the fitting and is more resistant to severe impact and fatigue effects than the poured socket connection.

NCC policy is to require the open, clevis style of fitting end connections on new cranes. Their accurately machined holes and fitted pins or bolts provide a solid attachment to the structure. Two-part pendants should be made with an intermediate short steel link between the adjoining end connections. Closed end style of end connections must engage the largest diameter pin or bolt that can be fitted to avoid introducing significant bending loads into the loop.

5.2.15 Fasteners and Connections. The design or sizing of fasteners and connections at structural-mechanical interfaces is governed by the less stringent of the two applicable criteria.

Example 1: The fasteners securing the hoist drive foundation to the machinery deck main beams are treated as structural connections.

Example 2: The pivot joints of the double-hinged folding stays of container crane booms are treated as structural connections with the hinge pins or bolts in double shear.

5.3 Mechanical. Crane industry standards CMAA #70 and #74 prescribe mechanical design criteria for bridge cranes, and that criteria apply to corresponding components of cantilever, gantry, and semi-gantry cranes. Some elements of those design criteria are recommendations (“should” statements). However, NCC policy is to consider them as mandatory. CMAA #70 and #74 establish the design criteria for the following mechanical components of the above crane types:

Open gearing
Bearings
Shafting
Drum pitch diameters, grooving, and fleet angles
Sheave pitch diameters and fleet angles
Travel wheels (top running) and rails
Travel wheels (under running) for wide flange and I-beams
Bumpers

Deviation from these criteria is permitted only with the approval of NCC.

The following design standards apply to portal cranes, floating cranes, container cranes, and unique portions of cantilever cranes. Design and selection of mechanical drive components is governed by the rated torque of the drive motor; and that of the wire rope drum and supporting components by the drum line pull. (Drive motor selection method is described in paragraph 5.5.5.3 below.) Mechanical design procedures are based on the assumption that the full rated torque of the drive motor will be applied to the mechanical components. Many mechanical components have unique, industry-wide design procedures and standards which, to a large extent, are followed by the NCC. The general design criteria for all other components are minimum design factors of 4.00 on the yield strength and 5.00 on the ultimate strength of the material. Other unique design and selection criteria follow.

Wire Rope Users Manual is the wire rope industry’s comprehensive reference for design issues relating to wire ropes and reeving system components. It provides background material on wire rope construction and classification, physical properties, behavior under load, handling and installation, all types of end terminations, field lubrication, and inspection. Particularly useful are the recommended reeving system features to lessen hook block spinning and reduce the probability of wire rope cabling. The wire rope selections in the manual include constructions and sizes which are not listed in Federal Specification RR-W-410 (the standard reference for wire ropes), and there are minor inconsistencies in the breaking strengths of some wire ropes listed in the two documents. NCC policy is to accept wire ropes and listed nominal breaking strengths of either document. However, all other design criteria of reeving systems are governed by the requirements of this handbook.

5.3.1 Gear Reducers. All standard commercial gear reducers have nameplates with the bending strength and pitting resistance (durability or wear) horsepower ratings stamped on them. The ratings are based on a specific input speed (normally 1170 or 1750 RPM) and 5000 hours of bearing life. If the actual operating input speed is different from that on the nameplate, the ratings are prorated accordingly, but the rated torque associated with the nameplate horsepower may not be exceeded. Neither the bending strength rating nor the pitting resistance rating may be less than the drive motor rating. The nameplate ratings are established by the gear reducer manufacturer in accordance with the standards and procedures of the American Gear Manufacturers Association (AGMA). The inherent safety margins are adequate to account for the increased loads due to drive motor starting torque and brake application. However, the limitations on the magnitude of the “overhung” load, usually on the output shaft, must be considered if a significant load is imposed on the shaft.

There are no industry rating standards for cycloidal speed reducers (since they are proprietary designs of a limited number of manufacturers) and their selection and applicability should be based on the manufacturer’s published data. These speed reducers possess unique performance and operating characteristics, such as capacity for high shock loading and backdriving, which make them desirable for some applications. Their selection should be made in consultation with the manufacturer’s engineering staff.

5.3.2 Open Gearing. Open gearing design and ratings are prescribed by AGMA standards. Crane drives often use custom designed open gear sets as the last set of the gear train – with the lowest speed and highest torque. It is therefore advisable to use only spur gears in this application to avoid the high axial loads caused by helical gear teeth. Often these gear sets include an overhung (cantilevered) pinion and are expected to operate with significant deflections under full load. To tolerate these conditions, the support foundations must be rigid and the gear pinion must be crowned. Neither the bending strength rating of each gear and pinion nor the pitting resistance rating of the set may be less than the rating of the drive motor. In exceptional cases, NCC may approve the use of a gear set with a lesser pitting resistance rating in a slow/low cycle application.

Bending strength and pitting resistance of spur and helical gears are calculated according to ANSI/AGMA 2001, Fundamental Rating Factors and Calculation Methods for Involute Spur and Helical Gear Teeth, and AGMA 908, Geometry Factors for Determining the Pitting Resistance and Bending Strength of Spur, Helical and Herringbone Gear Teeth. Life and reliability factors (C_L, K_L, C_R, and K_R) are to be taken as 1.0. The quality of gears is determined according to ANSI/AGMA 2000, Gear Classification and Inspection Handbook – Tolerances and Measuring Methods for Unassembled Spur and Helical Gears (Including Metric Equivalents). All open gearing on cranes should be Gear Quality Number Q8, or higher; except that rotate bearing gears, because of their large diameters and slender cross sections, may be Gear Quality Number Q6, or higher.

5.3.3 Shafts and Axles. These rotating mechanical elements are subject to fatigue failure due to continuous bending reversals (once per revolution). Their geometry has numerous steps and notches to accommodate gears, wheels, bearings, seals, couplings, and key seats. Each geometric discontinuity acts as a stress raiser which increases the susceptibility to fatigue failure. A comprehensive method for fatigue analysis of shafts and axles is presented in ANSI/ASME B106.1M and must be followed for analysis of each custom designed shaft and axle. Unless published endurance limit test data are available for the exact shaft material (and its condition) the endurance limit is usually taken as half of the ultimate strength.

5.3.3.1 Selection of Design Factors. If the given ultimate strength of the material is the minimum value, then the reliability factor of 1.00 is used; if the given ultimate strength is an average or representative value, then reliability factor of 0.814 or 0.753 is used for reliabilities of 99.0 percent and 99.9 percent, respectively. The choice of the level of reliability depends on the criticality of the drive and crane service. A reliability factor of 0.814 is appropriate for most applications. Shafts and axles are not designed for a particular number of cycles (life); therefore, the endurance limit (stress at which a steel component is expected to have an infinite fatigue life) is used as the reference. Furthermore, since the magnitude of future load/stress applications cannot be predicted, every reversed bending cycle is assumed to correspond to the rated torque. The assumptions introduce a significant degree of conservatism into the fatigue analysis, which is reflected in the selection of the design factors. NCC policy is to require a fatigue design factor of 1.5 for all but the most critical cases. For particularly critical service, or when it is established that the lifted load is nearly always the rated capacity of the crane, a design factor of 2.0 should be used.

5.3.3.2 Travel Drive Shafts. These shafts are relatively slender and their design is governed primarily by the torsional stress and deflection. Bending and transverse shear, even when present, are usually inconsequential in magnitude and do not control the shaft diameter. Design of long drive shafts, such as those on A-1 and A-5 bridge drives, is based on the torsional deflection under the applied torque. CMAA #70 prescribes the maximum allowable angular deflections for bridge drive types and corresponding torques.

5.3.4 Pins. Pins, including trunnions, are non-rotating mechanical members in which the transverse shear stress is a major contributor to the combined stress. The loads that are imposed on them are considered to be static for design purposes. The required design factors for the combined stress are 4.00 on the yield and 5.00 on the ultimate strength of the material.

5.3.5 Couplings. Couplings are rated by the manufacturers on the basis of horsepower per 100 RPM. These published ratings are prorated for the appropriate shaft RPM to obtain the coupling capacity. The manufacturers also prescribe the recommended service factors that should be applied to the drive torque for coupling selection. For crane bridge/boom (of a wall crane), portal base/gantry, and rotate drives the required coupling rating should be increased by an additional factor of 1.50; and for trolley drives by 1.25. The limiting design feature of coupling capacity is the keyway, which is not a part of the published rating. In some cases two keys/keyways are required to meet the design requirements of the coupling hub or shaft key seat. The coupling keyway and the shaft key seat bearing pressure (from the key) must have design factors of 4.00 on the yield and 5.00 on the ultimate strength of the material. The key itself never presents a design problem because it can be made of any high strength material.

American National Standard ANSI/AGMA 9002, Bores and Keyways for Flexible Couplings, is a comprehensive industry standard that describes the sizes and tolerances for straight and tapered bores, the associated keys and keyways, and other features and details. This standard is accepted by the major coupling manufacturers, and is reflected in their directions for installation of their couplings. Coupling hubs must be installed (press-fitted) in accordance with the coupling manufacturer’s directions. (Excessive interference fits may overstress the hubs and cause binding at the gear teeth.)

Shaft couplings are designed to transmit only torque; except for supporting the weight of the shaft, they must never be loaded in the radial direction.

5.3.6 Bearings. Rolling element (antifriction) bearings are selected on the basis of their published static and dynamic ratings. Bearing manufacturers publish bearing capacities and the procedures for calculating the effective loading (when radial and axial loads are present) for each bearing type.

5.3.6.1 Selection of Design Loads and L-10 Lives. Bearings are considered replaceable wearing components which deteriorate gradually and give adequate warning of approaching failure. Therefore, it is customary to analyze bearings for L-10 life with loadings which are less than those due to rated loads. Likewise, it is necessary to select bearings for limited life – infinite bearing life being

impractical. Except for standard commercial gear reducers, there are no industry standards for bearing selection for cranes. The criteria listed in Table 2 have been established by NCC and are mandatory for new crane designs. The L-10 life is calculated for the speed (RPM) of the bearing at its location in the drive train or system when the drive motor is operating at the rated speed of the drive. For reeving systems, the speed of the lead sheave is used for all sheaves in the system.

Table 2
Bearing Life Determination Criteria

Crane Type	**Drive**	**L-10 Life (Hours)**	**% Maximum Load**
Portal and Floating	Main Hoist, including sheaves and hook block	5,000	75
Portal and Floating	Auxiliary hoist, including sheaves and hook block	7,000	75
Portal and Floating	Whip hoist, including sheaves and hook assembly	8,000	75
Portal and Floating	Luffing hoist, including sheaves	5,000	75
Portal and Floating	Rotate, excluding the rotate bearing	7,000	85
Portal	Travel, including axles	10,000	85
Container	Hoist, including sheaves	25,000	75
Container	Boom hoist, including sheaves	15,000	75
Container	Trolley, including axles	25,000	75
Container	Travel, including axles	15,000	100
Container	Re-reeving devices	15,000	75

5.3.6.2 Hook Thrust Bearings. Hook thrust bearings are selected on the basis of the published static rating, which must be at least 50 percent greater than the hoist rating.

5.3.6.3 Bearing Installation. Bearings are installed with a press fit at one of the races, usually the rotating race. The fit tolerances are published by the bearing manufacturers, and must be followed. When adequate space is available, bearings may also be mounted over a tapered slotted sleeve interposed between the bearing inner race and the shaft. The sleeve is threaded on the smaller end for a tightening nut that bears against the face of the inner race and pulls the sleeve into the bearing inner race to obtain the desired press fit. The sleeve, its tightening nut, and the inner race are furnished as a matched assembly by the bearing manufacturer. The tightening nut must be installed per the bearing manufacturer’s directions and locked with a tab washer against loosening. For light service, such as bridge drive shaft support, bearing inner races may be secured to the shaft with a set screw. The inner race and the shaft are selected for a loose fit.

Bearing outer races in non-rotating components/housings may be press fitted or installed with an intentional loose fit. Such installations have one fixed bearing which is selected and sized to accept the axial load on one end of a shaft or axle, and a loosely fitted floating bearing, with axial float, on the other end.

Tapered roller bearing installations require that the inner and outer races be advanced into each other to obtain the desired preload with their tapered rollers. One of the races must therefore have a loose fit and be positioned axially and locked by means of a nut on the shaft or axle, or by shimming the outer race at the face of the bearing cap flange.

5.3.7 Mounted Bearings. In selecting mounted bearings (pillow block and flange cartridge type) the adequacy of the housing must also be considered. In the case of pillow blocks, the direction of radial load with respect to the base may govern the capacity of the assembly. The full capacity of the bearing itself is often obtainable only when the radial load is directed towards the base of the pillow block. Flange cartridge bearings should be fitted into the support structure so that the radial load is transferred only through the wall of the cylindrical section – without imposing any bending on the flange. Manufacturers' published ratings for the mounted bearings, with consideration of the load direction and mounting details, must be followed.

5.3.8 Bushings. For bushings subjected to rocker (dithering) motion, the maximum allowable bearing stress in the bore is limited to 20 percent of the material yield strength in compression, based on the projected area. For bushings subjected to full rotation and sliding, as those in fleeting sheaves, the maximum bearing stress in the bore is further restricted to 1000 psi or the bushing manufacturer's maximum recommended product of bearing stress and rubbing velocity, whichever is less. (Bearing stress on bushings is always based on the projected area; that is, the product of the length and bore of the bushing. The area of the grease grooves need not be subtracted.) Bushing wall thickness must be at least 1/16 of the bushing bore.

Bushing flanges and thrust washers which are intended for specific and significant loads, are designed to the same criteria as the bushings. Flange thickness and face width should be at least equal to, and three times the bushing wall thickness, respectively.

5.3.9 Keys, Key Seats, and Keyways. Keys are designed with minimum design factors of 4.00 and 5.00 in shear based on the yield and ultimate shear strengths of the material, respectively. (The shear yield and ultimate strengths may be taken as 60 percent and 70 percent of the yield and ultimate tensile strengths of the common key materials.) Key seats (milled in the shaft) and keyways (broached in hubs) are designed with the same design factors for bearing stress but based on the material compressive strengths and the net surface areas in contact. Chamfers, fillets, and end radii are subtracted from the projected areas. (It is customary to take the material tensile strengths as the compressive strength values.)

5.3.10 Sheaves. Running sheave pitch diameters for 6x37 class of wire rope construction must be at least 30 times the wire rope diameter. For non-rotating and spin-resistant wire ropes of various constructions, running sheave pitch

diameters must be at least 40 times the wire rope diameter. Equalizer sheave pitch diameters for all classes of wire ropes must be at least 18 times the wire rope diameter. The groove depth must be at least 1.15 times the wire rope diameter, the groove included (throat) angle 30 to 40 degrees, and the groove radius 0.060 to 0.120 inch larger than the wire rope diameter. Rims of running sheaves must be heat treated to a minimum hardness of 320 BHN in the groove. Sheaves with higher hardness carburized groove surfaces are also available.

5.3.11 Travel Wheels. Travel wheels of portal and container cranes are sized for the maximum imposed load. For portal cranes, the governing design load may be due to the hook load/boom radius combination for the maximum moment, or it may be due to the moment caused by the counterweight with no load on the hook and the boom at minimum radius. In both cases, the upperworks is rotated approximately over a corner of the portal base. (See paragraph 5.2.8.1 for the “beaming method” of calculating the upperworks position and the maximum corner load.) For container cranes, the trolley is positioned at the end of its boom travel limit with the rated load, and with no load at the end of its travel position on the main beam and the boom raised to its stored position.

With the maximum imposed corner loads calculated and the rail size specified, the minimum wheel diameter is determined using the following equation:

EQUATION: $MWL = K*W*D$ (7)

Where

MWL = maximum wheel load that is imposed on the wheel (in pounds).
K = sizing factor, usually 1500 (dimensionless).
W = effective width of rail head, which is the width of the rail head top minus the corner radii (in inches).
D = wheel tread diameter (in inches).

Travel wheels are required to be steel forgings, heat treated to at least 320 BHN. Carburizing is the preferred hardening process, but flame hardening may also be used, subject to NCC approval. The hardened case must extend to the inner faces and outer diameters of the flanges. Industry standards for wheel sizes and manufacturing requirements are prescribed by ASTM A504.

The standard rails are available in rail head hardness in the range of 200 BHN to 615 BHN. The common rails installed for portal and container cranes have rail head hardness of 320 BHN, for which the K factor of 1500 is applicable. For other rail head hardnesses, the maximum value of the K factor should be determined as follows:

EQUATION: $K = 2.5\ (\text{BHN of wheel tread} + \text{BHN of rail head})$ (8)

There is no detriment to large differences between the wheel and rail head hardnesses. Experience suggests that wear of both can only be improved by increasing the hardness of either the wheel, rail head, or both.

The wheel profile is determined by the rail system; however, the wheel treads (distances between interior faces of flanges) must be at least 1.0 inch wider than the rail head. Flange thickness and flange height must be matched to the rail system frogs and switches. The included angle between the flanges must

be 2.0 to 4.0 degrees wider than the angle of the rail head sides, and the fillet radius with the tread 0.030 to 0.060 inch less than the corner radii at the top of the rail head.

5.3.11.1 Other Wheel/Rail Combinations. The above formula applies to various non-standard wheel materials and running surfaces, such as bronze wheels or case rail segments of roller paths, among others. The value of K may be raised by up to 200 for cranes in light service and should be lowered by up to 200 for severe service.

5.3.12 Wire Rope Drums. Wire rope (hoist) drums are always of steel construction – either cast (on older cranes) or welded (on newer cranes). On welded drums, the longitudinal welds of drum barrels must be full depth penetration welds. The end plate connections to the drum barrel and stub shafts or hubs (for through shafts) must be reinforced radial stiffeners or internal diaphragms. The end plates must also provide a rigid mounting for the drum gear, when required. On newer cranes the drum gear is bolted to the end plate; on older cranes it may be integral or press fitted and keyed to the drum barrel. The ratchet wheel, on all cranes, is normally integral with the drum flange. The grooving is helical – with two opposite-hand grooves for double reeved systems, or a single groove for single reeved systems. (Container crane drums, having to spool four independent wire ropes, require four sets of grooves on the drum barrel. Alternatively, they may use two mechanically connected conventional drums.) The grooving is required to have a pitch of not less than 1.125 times and a depth of not less than 0.375 times the nominal wire rope diameter, respectively; and a groove radius of 0.52 to 0.55 times the nominal wire rope diameter. Drum pitch diameter for 6x37 class of wire rope construction must be at least 30 times, and for non-rotating and spin-resistant wire ropes of various constructions at least 40 times, the wire rope diameter. The diameter of the end flanges should be larger than the drum barrel outside diameter by at least two wire rope diameters. The drum barrel must be sized to spool all the active wire rope in a single layer, with at least two dead (inactive) wraps ahead of the anchor points. Drum designs with multi-layer spooling must be approved by the NCC.

The dominant stress on the drum barrel is due to the compression from the wire rope spooled at maximum wire rope pull (drum line pull). The pull is assumed to be imposed on a strip of drum barrel of the same width as the pitch and of the full cross sectional area, including the cusp between the grooves. The bending stress from the wire ropes of double reeved hoists is assumed to be near the center of the drum barrel (the position that corresponds to the highest hook elevation) and maximum wire rope pull. The torsional shear stress is that imposed by the drum line pull at pitch radius. Stub shafts are analyzed for infinite fatigue life under loads due to the drum line pull.

The drum line pull, calculated by the formulas shown in paragraph 5.3.13.1, is the governing design load for the drum and all other components of the reeving system. For the luffing hoist, where the drum line pull varies greatly with the boom angle, a representative value of 75 percent of the maximum drum line pull is used for fatigue analyses and bearing life determination.

5.3.12.1 Anchor Points. The dead ends of the wire ropes are anchored on the drum barrel by clamping or by inserting their swaged or poured end fittings into reinforced pockets. The clamp is grooved for two parallel wraps separated by one

pitch and two bolts between them. The bolts are installed into tapped holes in the drum barrel, torqued sufficiently to obtain solid clamping of the wire rope wraps, and lock wired. Alternatively, the wire rope segment between the clamp grooves may be bent back at the clamp instead of making a full wrap. Pockets for end fittings are shaped in the form of a key hole and the larger end is closed with a pipe plug or similar fashion to preclude dislodging of the end fitting.

The anchor points may also be located on the drum flanges end plates and the wire rope dead ends anchored as described above or with minor variations. However, anchoring by means of wedge sockets is prohibited on custom designed drums.

5.3.13 Wire Ropes. Hoist wire ropes may be improved, extra-improved, or extra-extra-improved plow steel, bright (uncoated, non-galvanized), pre-formed, regular lay, with an independent wire rope core, of 6x37 classification, and comply with Federal Specification RR-W-410 or Wire Rope Users Manual. Proprietary wire ropes may be used only with the approval of NCC.

With grooved drums, the hand of the lay is of no importance, but right-hand lay is more readily available and is normally provided. Wire ropes in the 6x37 class have an inherent tendency to untwist under load. This condition is evident in the small amount of rotation of the lower hoist (hook) block and is acceptable as long as the parts of line (between the upper and lower hoist blocks) do not twist up. If lower hoist block rotation cannot be tolerated in a specific application, the double reeved system must use two wire ropes with opposite-hand lays anchored to an equalizer bar.

5.3.13.1 Size Selection. Wire ropes are selected on the basis of the drum line pull (which occurs at the drum during hoisting) calculated as described below to account for the friction and bending losses at the sheaves:

EQUATION $$P = W/NE \qquad (9)$$

Where

P = drum line pull (in pounds)
W = total weight supported (in pounds)
N = number of parts of line supporting the load
E = reeving system efficiency

The reeving system efficiency E is calculated as follows:

EQUATION $$E = \frac{(K^N - 1.00)}{N\,(K^S)\,(K-1.00)} \text{ for single reeved systems} \qquad (10)$$

and

EQUATION $$E = \frac{2(K^{N/2} - 1.00)}{N(K^{S/2})\,(K-1.00)} \text{ for double reeved systems} \qquad (11)$$

Where

K = 1.00 plus percentage increase in the line pull to overcome the sheave friction and wire rope bending. For sheaves on bearings, K is taken as 1.02; for sheaves on bronze bushings, K is taken as 1.05. Sheave pitch diameters and wire rope construction are not considered.

S = number of running sheaves in the reeving system, including deflector sheaves that bend the wire rope 45 degrees or more.

The wire rope design factor is defined as the ratio of the nominal breaking strength of the wire rope and the drum line pull, and must be 5.00 or greater for 6x37 class of wire ropes. For non-rotating and spin-resistant wire ropes, used on whip hoists, the design factor must be 8.00 or greater.

5.3.13.2 Wire Rope End Fittings. There are two types of end fittings that are permanently bonded to the wire rope – swaged and poured. Swaged fittings are forged from mild carbon steel and are available for standard wire rope sizes up to 2.50 inch diameter. They are installed with special hydraulic equipment, normally provided by the swaged fitting manufacturer, that squeezes the fitting and causes the fitting metal to cold-flow into the exterior crevices of the wire rope. The bond that is formed is equal to 100 percent of the wire rope breaking strength. Swaged fittings are recommended for all wire ropes with an independent wire rope core. Wire ropes with a fiber core, and subjected to the full wire rope pull, must have the core segment inside the fitting replaced with a matching piece of wire rope, strand, or mild steel rod to obtain a bond equal to the breaking strength of the wire rope. Otherwise, if the fiber core inside the fitting is not replaced, the strength of the connection must be taken as no more than 90 percent of the wire rope breaking strength.

Poured sockets have a conical cavity into which the end of the wire rope is inserted, broomed to separate individual wires, cleaned and acid etched, and filled with molten zinc to fuse with the wires. (The fiber core, if present, must be cut out in this section of the wire rope.) The established procedure for zinc speltering must be carefully followed to obtain the proper bond without annealing the wires. A properly made zinc speltered socket connection is equal to 100 percent of the wire rope breaking strength. (Babbitt metal and lead are prohibited for speltered socketing. The strength of such connections is only a fraction - often as low as 1/4 – of the wire rope breaking strength.) It should be noted that the zinc cone does not have to fuse with the socket cavity and may shift (rotate) slightly before it seats permanently with use. Resin compounds, developing connections equal to 100 percent of the wire rope breaking strength, are also available and may be used for poured sockets. Resin compounds have a limited shelf life, and must not be used after expiration of that date. Cast steel poured sockets are made for standard wire rope sizes up to 4.00 inch diameter. Forged steel poured sockets are also available for wire rope sizes up to 2.375 inch diameter.

The style of the connecting end of the fittings may be open (in the form of a clevis with drilled holes), closed (in the form of an eye or an as-cast loop), or button (plain cylinder). The connecting pin of the closed style must be closely fitted to the loop opening to minimize the bending stress in the loop. Ferrule (button) fittings are intended to be inserted into pockets in structural or mechanical components. (Ferrule fittings are available for wire ropes only up to

1.50 inch diameter.) The fitting manufacturer's provisions for the connecting pin or pocket seat, as limited by the hole diameter, loop opening, or button diameter is considered adequate if the intended pin, bolt, or seat design is used; and stress analysis is not required.

5.3.13.3 Non-Permanent Wire Rope Retention Hardware. Wedge sockets, clips, and clamps are used as non-permanent fittings on wire ropes. Wedge sockets are standard commercial items designed for quick fastening of wire ropes in sizes up to 2.00 inch diameter. The basket is cast steel, and the wedge is cast steel or ductile cast iron. Properly made connections develop 75 to 80 percent of the wire rope breaking strength and are used as terminal dead end connections on mobile cranes. Wire rope clips are assemblies composed of a U-bolt, saddle, and two nuts; or two threaded interlocking L-shaped fist grips and two nuts. The clips are intended to grasp two parts of wire rope looped over a thimble. Sets of clips, installed per manufacturer's directions, develop 80 percent to 90 percent of the wire rope breaking strength. The U-bolt type is available for wire rope sizes up to 3.50 inch diameter, and the fist grip type up to 1.50 inch diameter. (Wire Rope Users Manual provides directions for the proper application of wire rope clips and sizing of wire rope ends.) The clips should be used only in accessible locations because they require periodic inspection and re-tightening as the wire rope stretches and shrinks in diameter.

Clamps are used to secure wire rope dead ends to the drum. The spooling of the wire rope on the drum is always required to provide at least two dead (inactive) wraps ahead of the clamp when the hook is at floor or ground level. Depending on whether the rope is clean/dry or greasy, two dead wraps reduce drum line pull to 20 percent to 40 percent at the clamp. (The friction coefficients are 0.120 and 0.070, respectively.) The short loop or another full wrap of wire rope that is interposed between the two grooves of the clamp is not considered in the analysis. The required clamping force is normally provided by a pair of bolts threaded into the drum barrel, flange, or end plate. The bolts should not be smaller than the wire rope diameter, should be torqued to obtain a solid clamping grip, and lock wired to each other.

Regardless of the type of retention, the ends of the wire rope must be seized with 8 to 10 wraps of low carbon steel wire.

5.3.14 Reeving Systems. With the exception of whip hoists, all hoists are normally double reeved. Double reeved systems have an equalizing feature between the two mirror image halves of the system to maintain equal loads on the wire rope or ropes. Either an equalizer sheave or an equalizer bar, mounted in or adjacent to the upper load block, is used for this purpose. With the equalizer bar the option of using two wire ropes of opposite hand lay is available to avoid any block rotation. The equalizer sheave or bar must be mounted in a pivoting bracket or frame to keep it in line with the wire ropes as the reeving geometry changes during hoisting and lowering. The orientation of the equalizer sheave or bar should be at right angle to the running sheaves. (Some older cranes have the equalizer sheave on the same pin parallel with the running sheaves. This arrangement requires one loop of the wire rope to be twisted to form a cross-over. The direction of the twist must be in the direction of countering the inherent block rotation.)

When the hook block of a bridge crane has four or more sheaves, the lead sheaves (those receiving the wire ropes directly from the drum) must be larger than the adjacent sheaves to allow these ropes, as they wind/unwind on the drum, to pass/clear the other wire ropes. The design and arrangement of the lower block must be such that the wire ropes will not be pinched or cut in case of two-blocking.

Reeving systems of container cranes are different from all others because they are intentionally non-equalized. The four sheaves of the headblock frame are supported by two-part, single reeved quarters of the reeving system with the wire rope dead ends terminating in adjustable fittings that are used to precisely match the lengths of the individual quarters. This arrangement maintains the level orientation of the lifted container even when its center of gravity is off the geometric center. In these situations, one of the reeving system quarters is loaded more than the others. In calculating the wire rope safety factors, the center of gravity of the lifted container is assumed to be at the geometric center and that all wire ropes are loaded equally.

5.3.14.1 Overhauling Weight. On portal and floating cranes the lower (hook) blocks must be sufficiently heavy to overhaul the reeving system and keep the wire rope coming off the drum taut with an unloaded hook in the upper limit switch position. For double reeved systems, the basic weight of the hook block is usually adequate. However, single reeved whip hoists, with only the weight of the hook and its wire rope fitting, must have a sufficiently heavy overhaul weight installed above the hook to keep the wire rope taut as it comes off the drum.

The following approximation may be used to determine the minimum block weight required to overhaul the reeving systems:

EQUATION $$B = RNT/E \qquad (12)$$

Where

B = block weight, in pounds
N = number of parts of line supporting the load
R = weight of the unbalanced wire rope, in pounds
T = tautness factor (a value of 2.00 is recommended to ensure proper spooling on the drum)
E = reeving system efficiency, see paragraph 5.3.13.1.

5.3.14.2 Fleet Angles. Fleet angle is defined as the angle that the wire rope, at its point of tangency, forms with the groove of the sheave or the drum. (The helix angle of the wire rope grooves is very small and may be omitted in calculating the fleet angle.) The angle of the sheave groove and the depth of the drum groove, as prescribed in the preceding paragraphs, prevent rubbing contact between wire rope and the outer edges of the grooves if the fleet angles are limited to 3.00 degrees. This fleet angle may be exceeded in some cases, but only with NCC approval. On older cranes, a small amount of cusp edge shaving on drums is sometimes evident in locations of largest fleet angles, but this worn-in condition is not considered damaging to the wire rope.

Reeving on bridge cranes is arranged so the fleet angles at the high and low positions of the hook block are equal but opposite. On portal and floating

cranes, the length of drum grooving and the proximity of the deflector sheaves on the A-frame often make it impossible to limit fleet angles to 3.00 degrees. In those situations, the deflector (fleeting) sheaves are installed so that they can slide on their pins when the fleet angle is sufficient to cause a side force from the wire rope large enough to slide them on their pins. The wire rope should bend at least 45 degrees to develop the lateral force required to slide the fleeting sheave without itself developing an excessive fleet angle. Fleeting sheaves must be designed with great care to function properly and require frequent lubrication. It is best to avoid the need for them.

5.3.15 Hook Blocks. The hook (lower) hoist block weight must be sufficient to overhaul the reeving systems and accelerate all parts of the wire rope with the block in any position. Except for wire rope slots and drain holes, the block design must fully enclose the sheaves and wire ropes. The internal arrangement and clearances must prevent the wire ropes from leaving the sheave grooves under any conditions. Blocks on hoists that have capacities greater than 5 tons must have a steel trunnion for mounting the load hook on a thrust bearing. The trunnion must be a separate component from the sheave pin and must swivel in the block side plates. The maximum bearing pressure of the trunnion on the side plate bores should not exceed 6000 psi, based on the projected area. The ends of the trunnion must be retained with
keeper bars and their fasteners must be lock wired. The blocks must be designed to permit easy disassembly without unreeving. Standard commercial hook blocks may be used at their published ratings on custom designed cranes.

Whip hoist hook blocks (headache or overhaul balls) are usually standard commercial items. They include a fitting with an integral bearing for hook rotation. Standard commercial whip hoist blocks may be used at their published ratings.

5.3.16 Hooks. Standard commercial hooks are available in all capacities. They are normally carbon or alloy steel forgings with a minimum elongation of 18 percent in 2.00 inches. Hooks are also available in other materials, such as corrosion resistant steel or cast bronze; however, their use must be approved by NCC. The hook shanks may be obtained threaded and otherwise machined or in as forged (unmachined) condition. The shank and nut threads are required to have a Class 2 fit.

Standard commercial hooks are rated on the basis of maximum working load (at which yielding starts) and ultimate load (50 percent of the load at which the hook deforms to the point where the attached sling would slip off). (These ratings are confirmed by manufacturers' periodic destructive testing.) Except where expressly prohibited, standard commercial hooks may be used at their published ratings; however, the shank and the mating nut threads must be analyzed for the minimum required safety factors.

Custom forged load hooks are required to be analyzed for minimum design factors of 4.00 and 5.00, based on material yield and ultimate strengths, respectively. Double barbed (sister) hooks should be analyzed with two maximum loads (50 percent of rated load each) applied 30 degrees from the shank centerline. The stress increasing effect of the hook curvature may be omitted.

It is customary to have the hooks equipped with a securing feature, such as a clamped spring loaded latch across the throat opening or a D-ring installed through a hole in the hook tip. Welding, including that to repair forging flaws, is prohibited.

5.3.17 Bumpers. Bridge crane bumpers are selected according to the applicable criteria of CMAA #70 and CMAA #74. The bumpers may be either one of the two standard commercial elastomeric or hydraulic types, or a custom designed spring type.

Portal cranes are not normally equipped with bumpers on the travel trucks. Container cranes are equipped with spring or hydraulic bumpers on both the travel trucks and trolley. These bumpers should be designed for a deceleration rate of 16 feet/second/second when contacted at 50 percent of the corresponding rated speed. (The stroke should be calculated using an efficiency of 0.5 for spring bumpers and 0.8 for hydraulic bumpers.) Additionally, the bumpers must be designed to absorb/dissipate the total energy of the gantry or trolley traveling at 100 percent of rated speed without sustaining any damage. The boom bumpers (buffers) of floating and container cranes (mounted on the A-frame or gantry structure) are selected to absorb and dissipate the kinetic energy of the boom at its rated hoisting speed without any damage to the structural or mechanical components of the crane. (Portal cranes are not normally equipped with boom bumpers.)

In determining the kinetic energy that a bumper must absorb and dissipate, the hook block and load are not included if they are free to swing. The elastomeric and hydraulic bumpers should be selected in accordance with the manufacturer’s published recommendations.

5.3.18 Spud Locks. Spud lock pins must be designed for the torque/load due to the maximum design wind velocity with the boom at maximum radius. The shear stress design factors must be 4.00 and 5.00 based on the material yield and ultimate shear strengths, respectively. The bearing stress on the pin and its pocket bore must have a design factor of 4.00 based on the material tensile yield strength.

On floating cranes, the loads due to list and trim must be added to the wind load.

5.3.19 Rotate Holding Brakes. The combined capacity of these brakes, multiplied by the mechanical advantage of the back-driven speed reducer, must be adequate for the imposed rotational loads that govern the design of spud locks. The efficiency and operational characteristics of the back-driven speed reducer must be confirmed with the manufacturer.

5.3.20 Ratchet and Pawl Mechanisms. The ratchet, its fasteners, the pawl, and the pivot joint are designed for a hypothetical 150 percent rated hook load to account for possible impact in engaging the ratchet. This design approach has been used on the older portal and floating cranes. On newer cranes, in order to avoid recalculation of the wire rope pull for this hook load, crane designers use 150 percent of the rated hook load drum line pull for the design of the ratchet and pawl mechanism. This conservative approach can be readily accommodated with a practical design. All pivoting joints are required to have grease lubricated bushings.

5.3.21 Threaded Fasteners. Many standard commercial components – such as gear reducers, brakes, and pillow blocks – include mounting holes or slots which may not be large enough for fasteners required to provide the mechanical design factors. NCC policy is to accept SAE J429 Grade 5 fasteners or ASTM A325 bolts of the intended diameter, with appropriate nuts, for mounting such components. Higher strength SAE J429 Grade 8 fasteners and ASTM A490 bolts, with appropriate nuts, may also be used but the installation torque for all mounting fasteners and bolts is required to correspond to 67 percent of the SAE J429 Grade 5 material yield strength. SAE J429 Grade 8 and ASTM A490 fasteners may only be pre-loaded to their full installation torques when so prescribed by the component manufacturer. In cases where a tapped hole is used because installation of a nut is impractical, the tapped material must have yield and ultimate strengths at least equal to those of the corresponding nuts. A hardened steel washer must be installed over each mounting hole or slot.

All custom designed joints and connections are required to have fasteners and bolts sized for design factors of 4.00 and 5.00 based on material yield and ultimate strengths, respectively. Tapped threads must be analyzed for the required length of engagement.

5.3.22 Surface Finishes. Surface finish roughness height ratings in micro-inches for custom designed and machined components are required to be as follows:

Items or Locations	Rating
Shaft seats for bearing inner races	63
Bearing housing bores for fixed outer race	125
Bearing housing bores for floating outer race	63
Bushing bores, rubbing surfaces of flanges	63
Rubbing surfaces of bushing flanges and thrust washers	63
Pins in bushings	32
Bores of gears, couplings, and wheels	63
Seats for gears, couplings, and wheels	125
Wire rope grooves (on drums and sheaves)	125
Keys, key seats, and keyways	125
Surfaces in contact with synthetic seal lips	16
Surfaces in contact with felt strip seals	63
Gears (working surfaces and root fillets)	63
Brake wheels (working surfaces)	63

All other shaft, axle, pin, bore, and mounting surfaces should be finished to a rating of 125. Any finer surface finish is satisfactory.

5.3.23 Fits. All components that transmit drive or braking torque – pinions, gears, brakes, and wheels – are required to be interference fitted (pressed) on their shafts or axles, in addition to being keyed. Interference fits must comply with the tolerance ranges of ANSI B4.1 for medium drive fits (FN2) unless the material, length of engagement, or imposed loading justify another fit. Locational interference fits (LN2 or LN3) may be used for installation of large components, such as wire rope drum gears on drum barrels. For design purposes, all drive and braking torque is assumed to be transmitted by the keys, regardless of the degree of press fit.

Bearings, couplings, bushings, and seals are required to be fitted according to the manufacturer's recommendations.

Single keys must be fitted to the Class 2 requirements of ANSI B17.1. When it is impractical to re-machine the key seat or the keyway, the key cross section may be modified/stepped and custom fitted for the required fit. Double keys may be fitted to the less accurate Class 1 criteria.

5.3.24 Welding. All welding should comply with the applicable requirements of AWS D1.1 or D1.14. Otherwise, the welds must be designed to provide the required design factors of mechanical components. The strength of the weld metal is always greater than the strength of the base metal; however, the required design factor is based on the strength of the base metal.

5.3.25 Hydraulic Systems. With the possible exception of the reservoir, all hydraulic system components are standard commercial products with specific pressure ratings. Hydraulic hoses and tubing commercial ratings provide a design factor of 4.00 based on their bursting pressure. Various SAE standards establish the requirements for hydraulic hoses, tubing, fittings, and assorted components. All selected hydraulic components may be used at their commercial rating; components which do not comply with the SAE standards or are not included in them, must be approved by NCC. Corrosion resistant pressure tubing is required on all installations exposed to the weather and on floating cranes. The standard material for housings of most hydraulic components is gray cast iron, with no option for any other material. Manufacturer's ratings of components should be accepted at full value. (It should be noted that hydraulic power systems are always designed with pressure limiting relief valves, which provide positive protection against any transient pressure spikes.)

The nominal operating pressure of hydraulic drive (power) systems of custom designed hoists should not exceed 2000 psi. Hydraulic fluid should comply with the recommendations of the components' manufacturer and must be compatible with the seal materials. Only petroleum based hydraulic fluids may be used in the drive systems. The use of water based and other non-petroleum hydraulic fluids must be approved by NCC.

Secondary hydraulic systems, such as brakes and various actuators, should be standard commercial products and should be used at their full commercial ratings.

5.4 Mechanical-Electrical. Mechanical-electrical components of cranes are considered to be: electro-mechanical shoe and disc type brakes, hydraulically applied shoe brakes (thrusters), caliper disc brake systems, clutches, and gear motors. These components, as applicable, are required to be integrated into the crane's electrical system.

5.4.1 Sizing and Selection of Components. Following are the criteria to be utilized for the sizing and selection of mechanical-electrical crane components. Except as stated otherwise, all components are required to be the industrial or marine grade products of manufacturers specializing in the production of this type of equipment.

5.4.1.1 Mechanical Criteria for Brakes. On a portal crane, two electro-mechanical shoe brakes, each rated at 130 percent of rated motor torque (minimum), are required to be provided for each hoist drive mechanism.

If a caliper disc brake system is provided on the wire rope drum, only one electro-mechanical brake, rated at 150 percent of rated motor torque (minimum), is required. Hoist drive brakes are required to be adjustable down to 50 percent of their torque ratings by reducing the tension of the spring which serves as the brake's setting mechanism. Electro-mechanical shoe brakes are sized and designed in accordance with the applicable requirements of NEMA Standards Publication No. ICS 9 and of AISE Standard No. 11; both documents only address shoe brakes having wheel diameters of 8 inches or larger. Magnet operated shoe brakes are available with wheels having diameters from 8 inches to 30 inches. Solenoid operated shoe brakes are available with wheels having diameters from 4 to 8 inches. Electro-mechanical shoe brakes, except brake wheels, are required to be of all steel construction; including shoes, shoe levers, armatures, pull rods, torque springs, bases, etc. Brake wheels may be steel, ductile cast iron, or gray cast iron. Electro-mechanical brake shoe or pad linings are required to be of a non-asbestos material.

The hoist drives on portal, floating, and other cranes with operator's cabs on the same structure as the hoist, may include a foot operated hydraulic hoist brake in addition to the other brakes for speed modulation if their electric drives are load sensitive. Alternatively, instead of an independent hydraulic brake, an electro-mechanical brake may be equipped with an integral hydraulic system for over-riding the electrical release and applying the brake. Each hoist brake is required to be rated at 130 percent of rated motor torque (minimum). Hydraulic brakes, when used, are required to be capable of applying 130 percent of rated motor torque based on an operator applied foot pedal force of 60 pounds.

One electro-mechanical shoe or disc brake, rated at 100 percent of rated motor torque (minimum), is required to be provided for each travel drive mechanism and for each rotate drive mechanism on a portal crane. Electro-mechanical disc brakes are sized and designed in accordance with the applicable requirements of NEMA Standard Publication No. ICS 9; their selection is required to be based upon these ratings. Travel drive and rotate drive brakes are required to each be adjustable down to 50 percent of their torque rating by reducing the tension of the springs which serve as the brake's setting mechanism.

On portal and floating cranes with load sensitive electric drives or drives with a drift point, each rotate drive mechanism is also required to be provided with a spring released, hydraulically applied, shoe type brake. Each rotate drive brake is required to be rated at 100 percent of rated motor torque (minimum). Hydraulic brakes, when used, are required to be capable of applying 100 percent of rated motor torque based on an operator applied foot pedal force of 60 pounds.

Certain hoist wire rope drums are required to be provided with a fail-safe caliper disc brake system. The brake controls are required to employ a failure detection system to set the disc brake mechanism whenever there is a 5 percent change in the ratio of drum shaft to motor shaft speeds. The disc brake mechanism is required to have a torque rating of not less than 150 percent of rated hoisting torque at the point of application; however, the energy which would have to be absorbed, with no contribution from the other brake in the drive train, and dissipated during an emergency stop is also required to be taken into consideration. All metal components are required to be steel with the exception of the brake housing, which may be gray or ductile cast iron. The brake pads are required to be a non-asbestos material.

On a bridge crane, the hoist holding, trolley, and bridge brakes are required to have, as a minimum, the torque ratings required by CMAA #70. The brakes may be either shoe or disc type.

5.4.1.2 Electrical Criteria for Brakes. On a portal crane, all electro-mechanical brakes are required to be direct current type. Half of the travel drive brakes, in each corner of the crane (if constant potential controls are used), and, if there are two electro-mechanical brakes, one of the electro-mechanical brakes in each hoist drive is required to release upon movement of the drive's master switch handle from the OFF position and is required to be time delayed in setting after the drive's master switch handle is returned to the OFF position; all other brakes are required to be non-time delayed. The time delayed setting of a brake is required to not involve motor control circuitry in any way but is required to be achieved using a separate brake contactor, energized through master switch contacts, and a resistance-capacitance (RC) network across the brake coil, with resistance being adjustable so as to permit timed delay to be from 1 to 3 seconds. All non-time delayed brakes are required to be released upon movement of the drive's master switch handle from the OFF position and, for hoist drives, verification of motor current; they are required to be set when the motor(s) have regeneratively slowed to the predetermined speed. In addition, all non-time delayed brakes in a drive are required to be set upon loss of power to any motor in that drive. A switch is required to be provided in the operator's cab to energize the swing drive brakes at all times, except when power is lost.

When a hoist drive is equipped with a caliper disc brake system and an electro-mechanical brake, the caliper disc brake system, is required to be released after the electro-mechanical brake and to be time delayed in setting during normal stopping.

On a bridge crane, when a hoist drive has more than one electro-mechanical brake, one brake is required to set upon controller being returned to off, the second brake is required to be time delayed by an adjustable amount between 1 and 3 seconds. Bridge and trolley drive electro-mechanical brakes are required to be set upon controller being returned to off.

The torque rating of an electro-mechanical brake is for a specific period of time based upon the brake coil's time rating. A brake is required to be selected on the basis of its time rating corresponding with that of the associated drive motor.

5.4.1.3 Mechanical Criteria for Clutches. A micro-drive consists of a motor, gear reducer electro-mechanical brake, and magnetic friction type clutch or a toothed-face coupling; it is used to achieve hook or wheel speeds of 2.0 feet per minute or slower. The clutch permits engagement and disengagement of the micro-drive from the input shaft of the primary (main) drive train.

The electrically operated, DC magnetic, dry running friction clutch is required to have ample running clearance when disengaged and is required to be rated at 150 percent or more of the main drive input torque. A clutch's time rating corresponds to its coil's time rating. The clutch is required to be totally enclosed and to be of the type specifically designed for heavy industrial or steel mill

applications. The clutch housing is required to be of a type having convenient access for visual inspection and designed to dissipate heat readily. Clutch housings of hoist drives are required to be steel or ductile cast iron.

5.4.1.4 Electrical Criteria for Clutches. Power is not to be permitted to be applied to a micro-drive unless the clutch is fully and positively engaged. If the clutch should, for any reason, disengage during operation of the micro-drive, main line contacts are required to be opened and all non-time delayed brakes to be set. Application of power to the main motor is required to be prevented with the clutch engaged.

Means are required to be provided to allow transfer to and from the micro-speed mode of operation only when the master switch is/pushbuttons are in the OFF position and all brakes have been set for not less than five seconds. Transfer is then required to occur by energizing (or de-energizing) the clutch and transferring master switch/pushbutton, electric brakes, and limit switch functions to the control system associated with the selected mode.

A current sensing relay, is required to be utilized in series with the clutch coil to verify energization/de-energization. The current sensing relay's contacts are also required to be used to energize a (green) CLUTCH ENGAGED pilot light in the operator's cab/on the pushbutton station when the clutch is energized.

In addition, a speed responsive switch is required to be provided on the main motor shaft to sense an overspeed condition of approximately 150 percent of its speed in the micro-speed mode. The overspeed switch is required to be of a design that is not damaged by normal operating speed of the main motor. The overspeed switch is required to be utilized to energize a (green) MICRO SPEED NORMAL pilot light in the operator's cab/on the pushbutton station. The light is required to be illuminated whenever the drive speed is less than 150 percent of the micro-speed mode speed in either normal or micro-speed mode. The overspeed switch is required to cause the opening of the main line contact and the setting of all non-time delayed brakes when an overspeed condition is sensed.

5.4.1.5 Gearmotors. Gearmotors are commercial off-the-shelf units with the motor and gear reducer packaged into a single unit. The gear motor's overall rating is given in terms of horsepower and torque for the unit.

American National Standards ANSI/AGMA 6019, American National Standard for Gearmotors Using Spur, Helical, Herringbone, Straight Bevel, and Spiral Bevel Gears, and ANSI/AGMA 6034, American National Standard, Practice for Enclosed Cylindrical Worm Speed Reducers and Gearmotors, establish industry standard for gearmotors with various types of gearing – spur, helical, herringbone, straight bevel, spiral bevel, and cylindrical worm.

5.5 Electrical. The National Electrical Code (NEC), crane industry standards CMAA Specification Numbers 70 and 74, and ANSI/ASME HST-4M prescribe the criteria that apply to virtually all electrical components of cranes. Some elements of those design criteria are recommendations ("should" statements), but NCC policy is to consider them mandatory. Design criteria are established for the following electrical components of cranes:

- motors
- resistors
- conductors

In cases of non-compliance with these criteria, sometimes discovered on older cranes, the equipment or components may be permitted to remain in places with the approval of NCC.

5.5.1 Motor Operating Regimes. All motors on all crane drives are subjected to four distinct operating conditions, or “quadrants” of operation. For travel and rotate drives, these operating conditions are as follows:

Quadrant I – motor torque acts in the direction of motion. The speed of the motion is either maintained (against resisting forces due to friction, wind, or slope/gravity) or is being accelerated against these forces and inertia.

Quadrant II – motor torque acts opposite the direction of motion. The speed of motion is being decelerated. This condition is called “plugging.”

Quadrant III – motor torque acts in the direction of motion, but both are opposite (in reverse) of those of Quadrant I.

Quadrant IV – motor torque acts opposite the direction of motion, but both are opposite of Quadrant II. The effect is identical to that of Quadrant II, but in reverse.

These four quadrants are depicted in Part A of Figure 29.

Motor operating conditions of hoist drives are similar, but the dominant influence of the hook load distorts the operating symmetry between the quadrants.

Quadrant I – motor torque acts in the hoisting direction of motion. The hook load is hoisted at a constant speed or is being accelerated.

Quadrant II – motor torque acts opposite the hoisting motion. This condition develops only when a lightly loaded but relatively fast hoisting motion is being stopped, and motor torque is required to counteract the inertia of the drive’s moving parts quicker than would the force from the hook load.

Quadrant III – motor torque acts in the lowering direction. The motor torque is accelerating the drive’s moving parts and the hook load accelerates downward more quickly than it would if it had to overcome the drive’s inertia without the motor torque. If the hoist drive motor does not have “stiff” (non-load sensitive) torque characteristics that prevent overhauling, an external supplementary brake torque is required to control the lowering of the hook load. An eddy-current brake or mechanical load brake is normally used for this purpose. When combined with the torque produced by the eddy-current brake, the motor torque is adequate to control the lowering of the hook load. In the case of a hoist drive with a mechanical load brake, motor torque is required to continuously relieve the pressure between the wedging friction elements, allowing them to slip on each other and thereby control the lowering of the hook load.

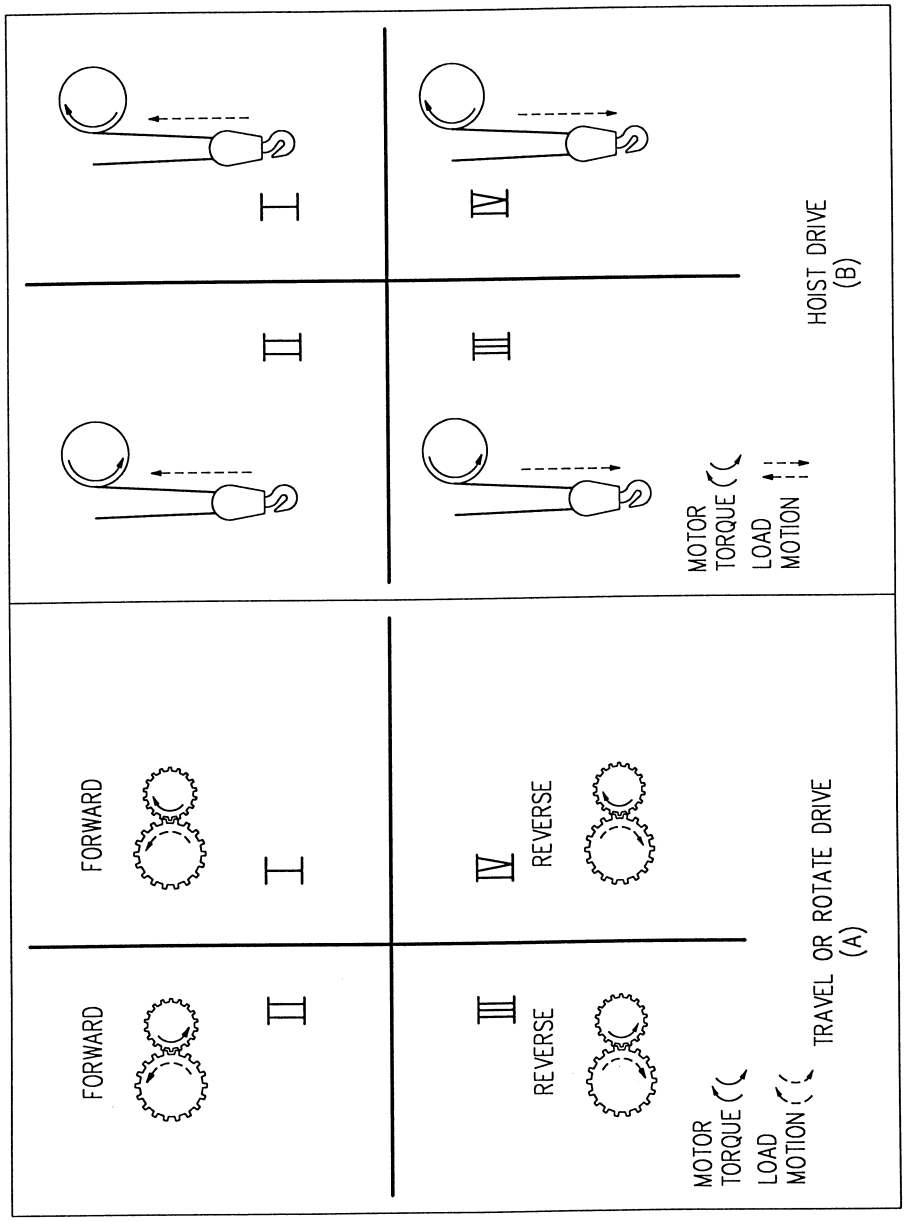

FIGURE 29
MOTOR OPERATING REGIMES

Quadrant IV – motor torque acts in the hoisting direction while the motion continues to be in the lowering direction; that is, the motor has the capacity to develop sufficient torque to slow down the lowering speed or bring the hook load to a stop and, if maintained, begin hoisting.

The four quadrants of hoist motor operation are shown in Part B of Figure 29.

5.5.2 Motor Characteristic Curves. Performance characteristics of a motor are represented graphically by the "characteristic curves". Each category, design, and model of a motor has its own unique set of characteristic curves. Figures 30, 31, and 32 are representative examples of three types of DC drive motors used on cranes. Figure 33 depicts the approximate characteristic curves of AC motors. These relationships hold for squirrel cage NEMA Designs B and D motors, and for wound-rotor motors with no resistance inserted in the rotor circuit. (The performance of a wound-rotor motor is heavily influenced by the amount of resistance connected to its secondary winding.)

It is important to note that each motor rating has an associated time limit. If the motor is operated at its rated load for a longer period of time, it will overheat. However, a motor can tolerate short periods of overloading if the preceding operating condition was below its rated load. These characteristics must be considered in selecting a motor for a particular crane drive.

5.5.3 Motor Branch Circuits. The behavior of a drive and its response to the operator's inputs is determined by the performance characteristics of the motor in combination with its branch circuit. Typical motor branch circuits used on crane drives are depicted in figures 34, 35, 36, 37, 38, 39, 40, and 41; they determine the direction of motion, the speed points, energization of the electrical braking or speed limiting systems, and activation of the electro-mechanical holding brakes. There are significant differences in some circuits for the same type of motor, depending on whether they are in a hoist or travel drive.

5.5.3.1 DC Motor Branch Circuits. Figure 34 is the typical DC series-wound motor hoist drive circuit. Figure 35 is the preferred circuit for a curved track portal crane travel drive; it connects opposite DC series-wound drive motors in series so that the wheels on the outer rail rotate faster than those on the inner rail and thereby produce a "freely-rolling" condition for a crane on curved track. Figure 36 depicts a simpler variation of a travel drive suitable for a straight track – where one motor drives two opposite travel wheels through a connecting shaft.

Figure 37 shows the two options available for adjustable voltage control of DC shunt-wound motors. The magnetic type, known popularly as the Ward-Leonard system, requires a dedicated motor-generator set. Cranes with Ward-Leonard systems typically use a single motor or diesel engine to drive multiple generators; with individual generators assigned to specific drives. Because of their bulk, their use is limited to large capacity hoists and OET bridge crane drives that require low sensitivity to loads and where it is necessary to avoid electronic components because of their susceptibility to interference from the operating environment. The travel drive circuit shown in figure 38 is similar to that of figure 35, except for the use of DC compound-wound motors, which make it resistant to being overhauled.

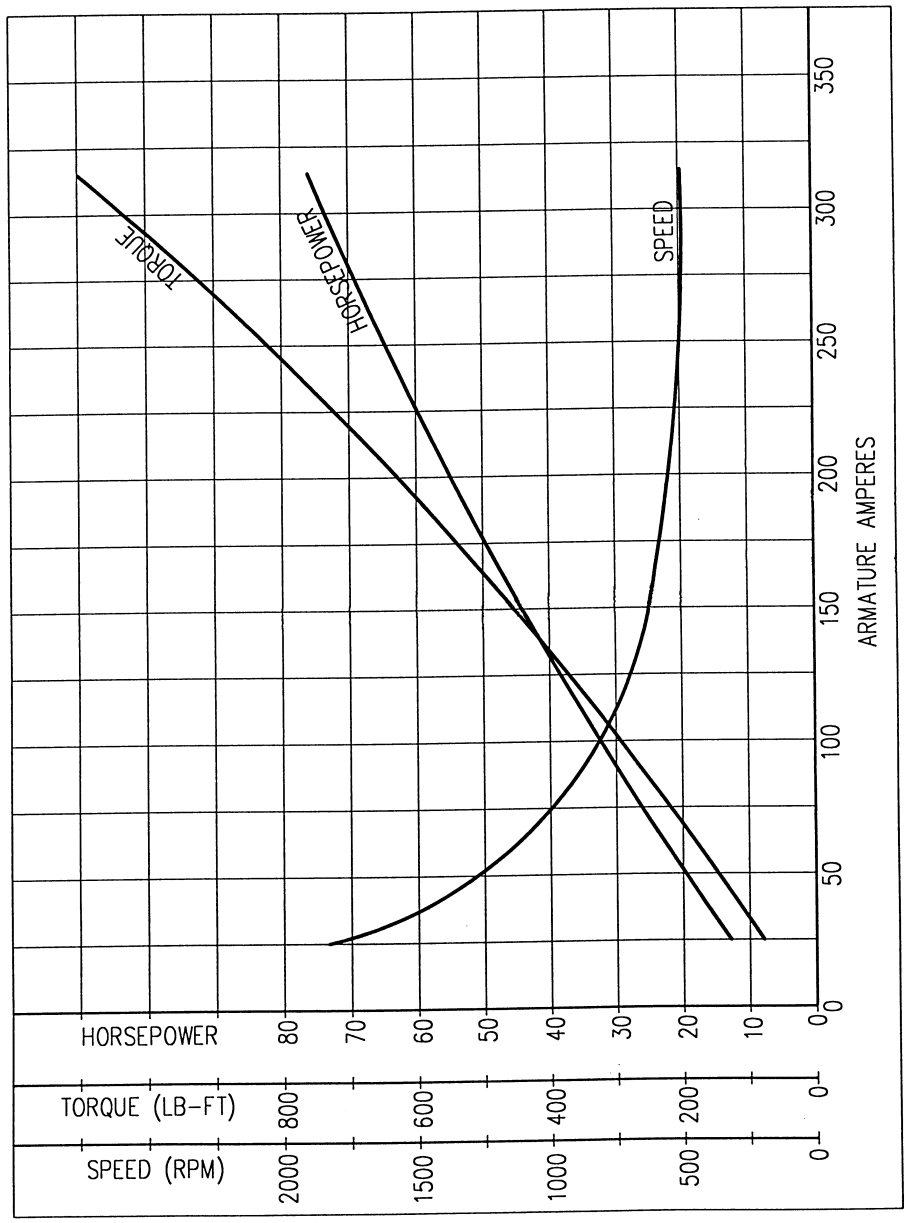

FIGURE 30
CHARACTERISTIC CURVES, DC SERIES-WOUND MOTOR, 30HP

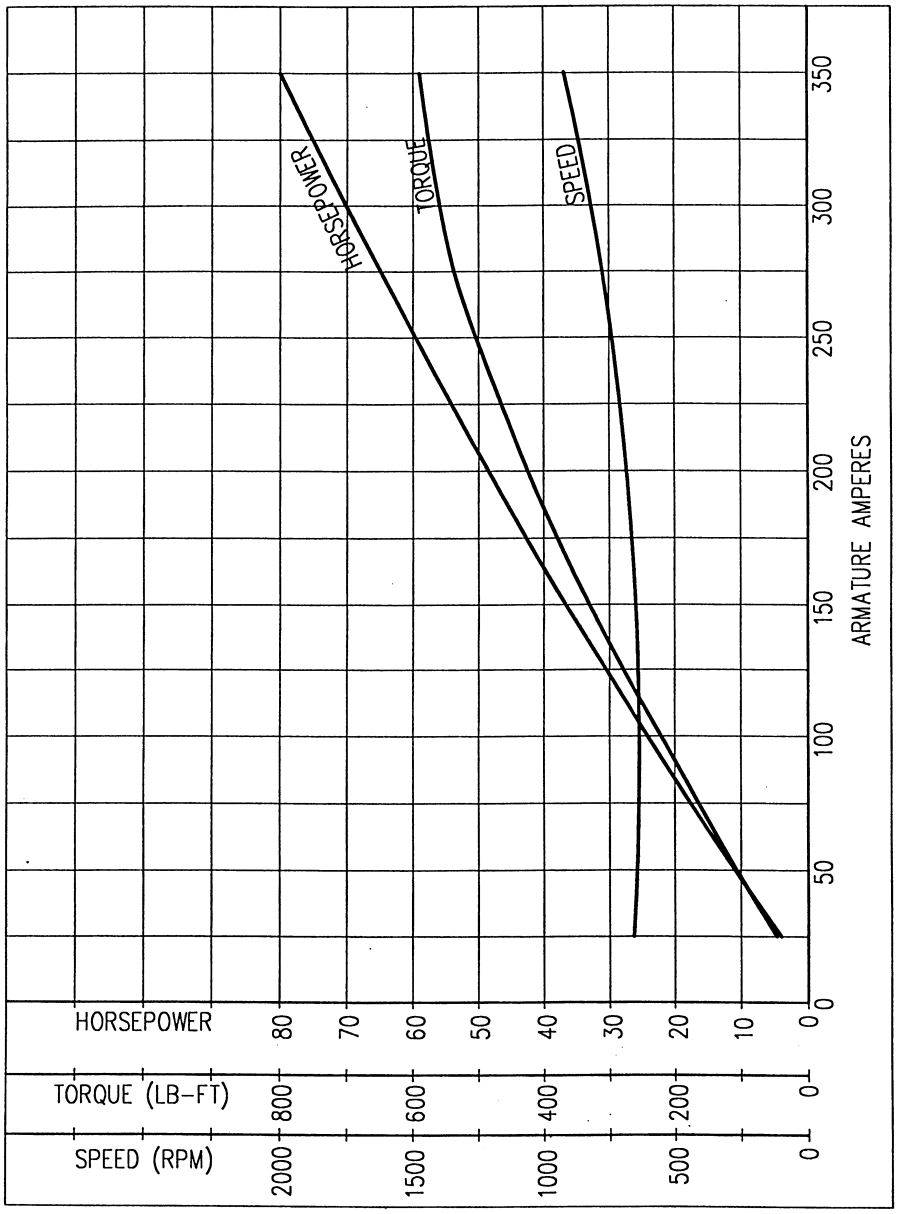

FIGURE 31
CHARACTERISTIC CURVES, DC SHUNT-WOUND MOTOR, 30HP

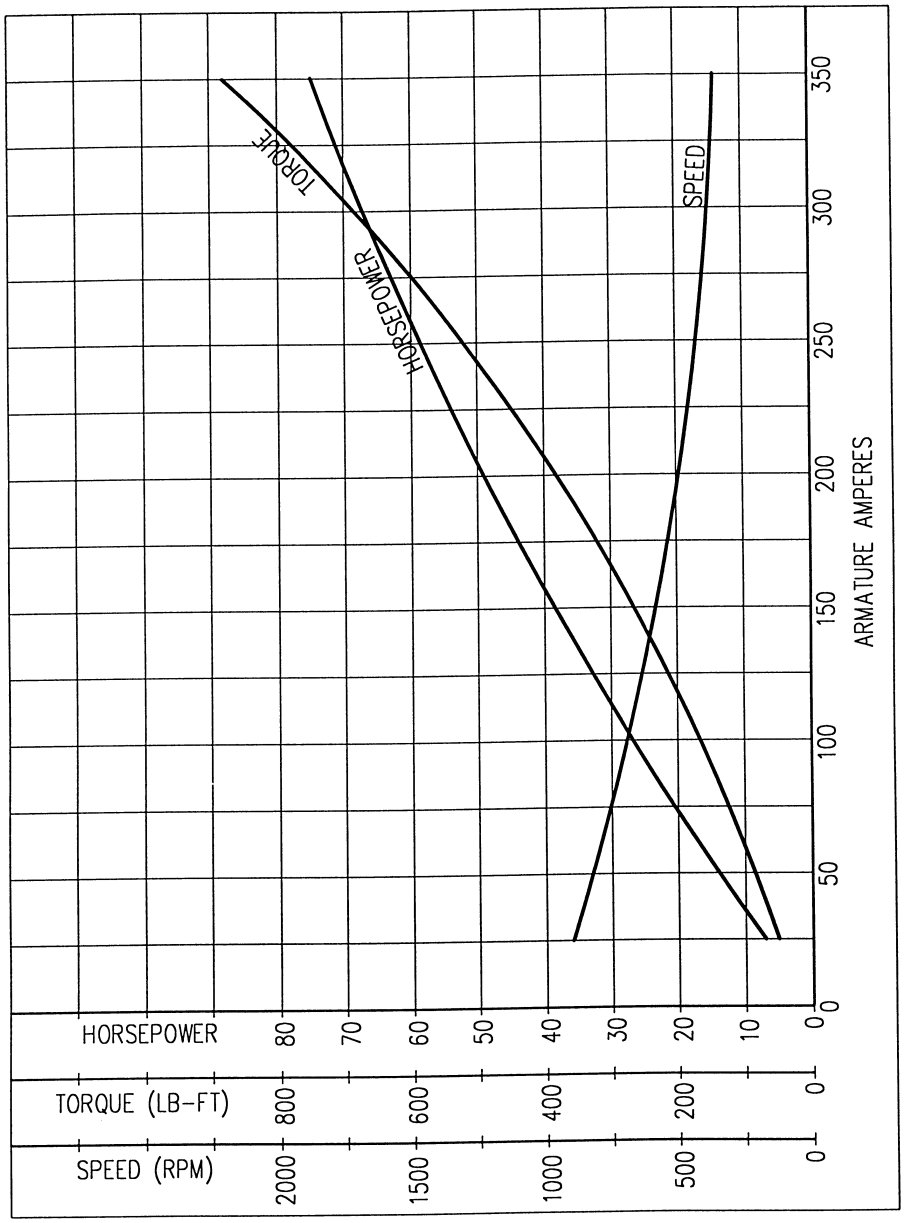

FIGURE 32
CHARACTERISTIC CURVES, DC COMPOUND-WOUND MOTOR, 30HP

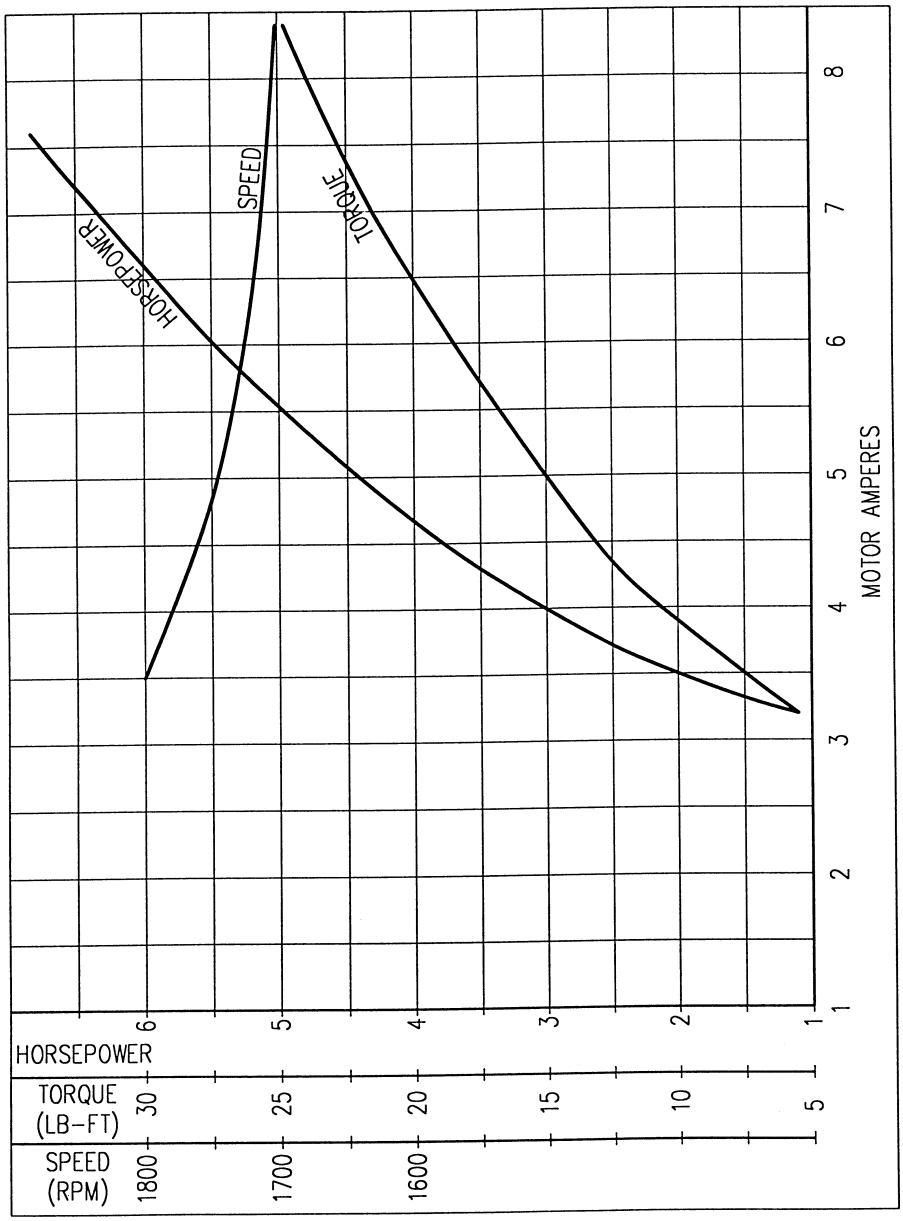

FIGURE 33
CHARACTERISTIC CURVES, AC SQUIRREL CAGE MOTOR, 5HP

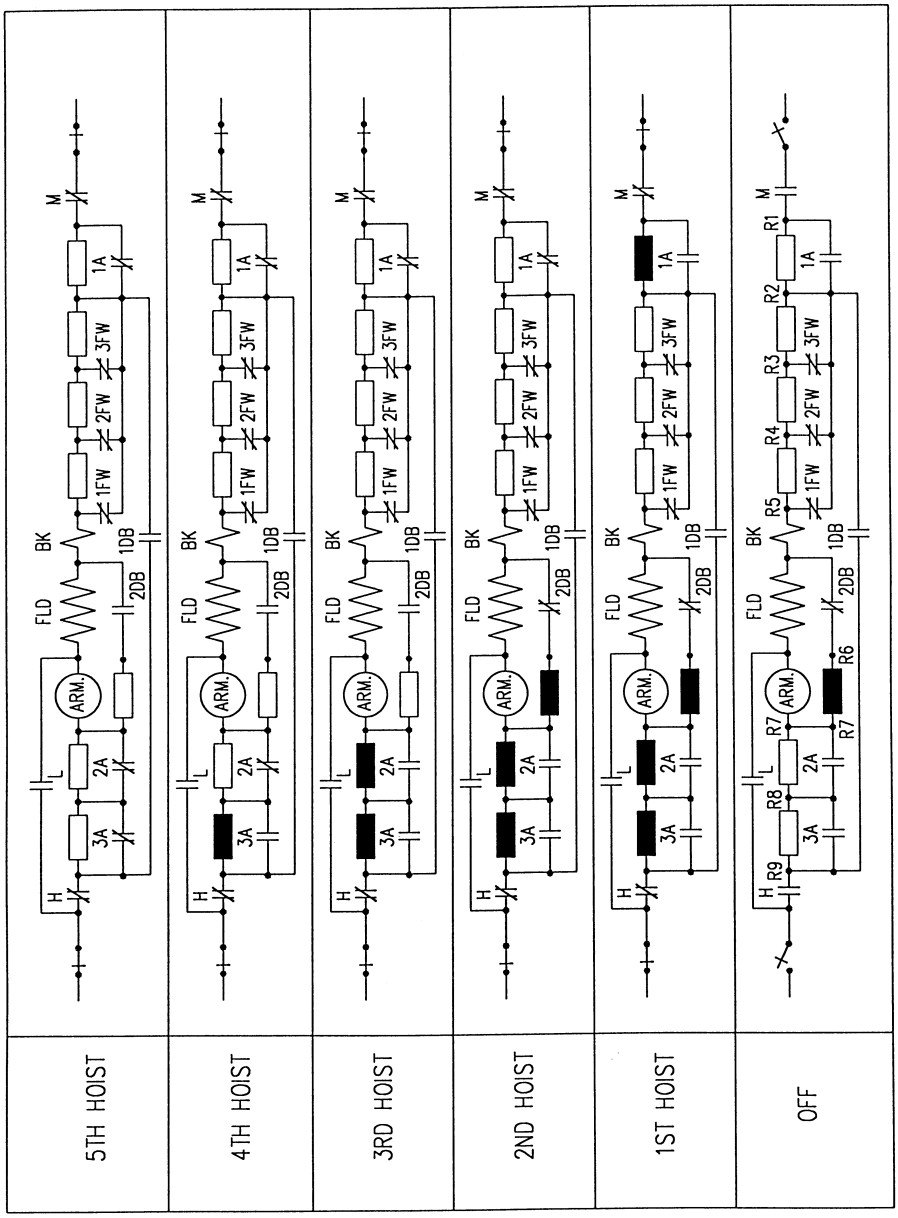

FIGURE 34A
DC SERIES-WOUND MOTOR BRANCH CIRCUIT (HOIST DRIVE)

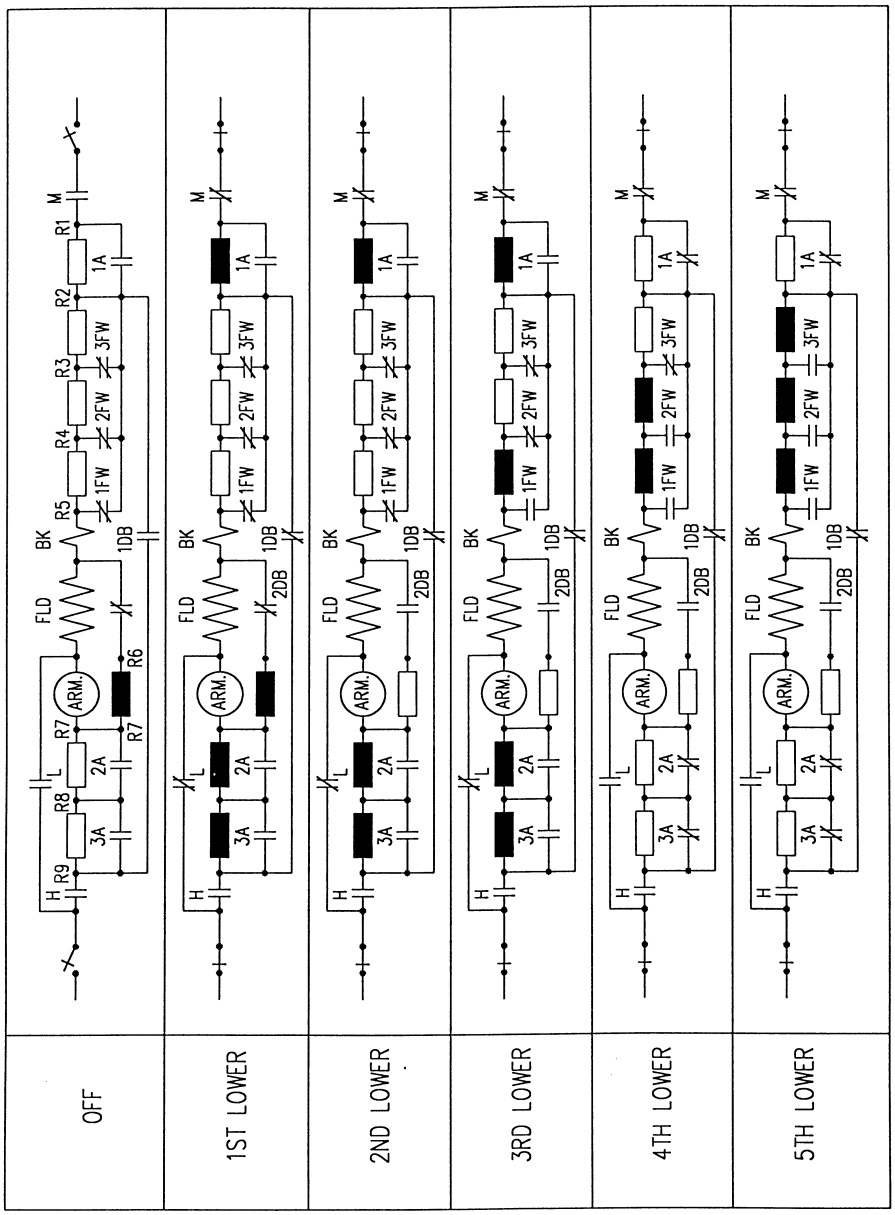

FIGURE 34B
DC SERIES-WOUND MOTOR BRANCH CIRCUIT (HOIST-DRIVE)

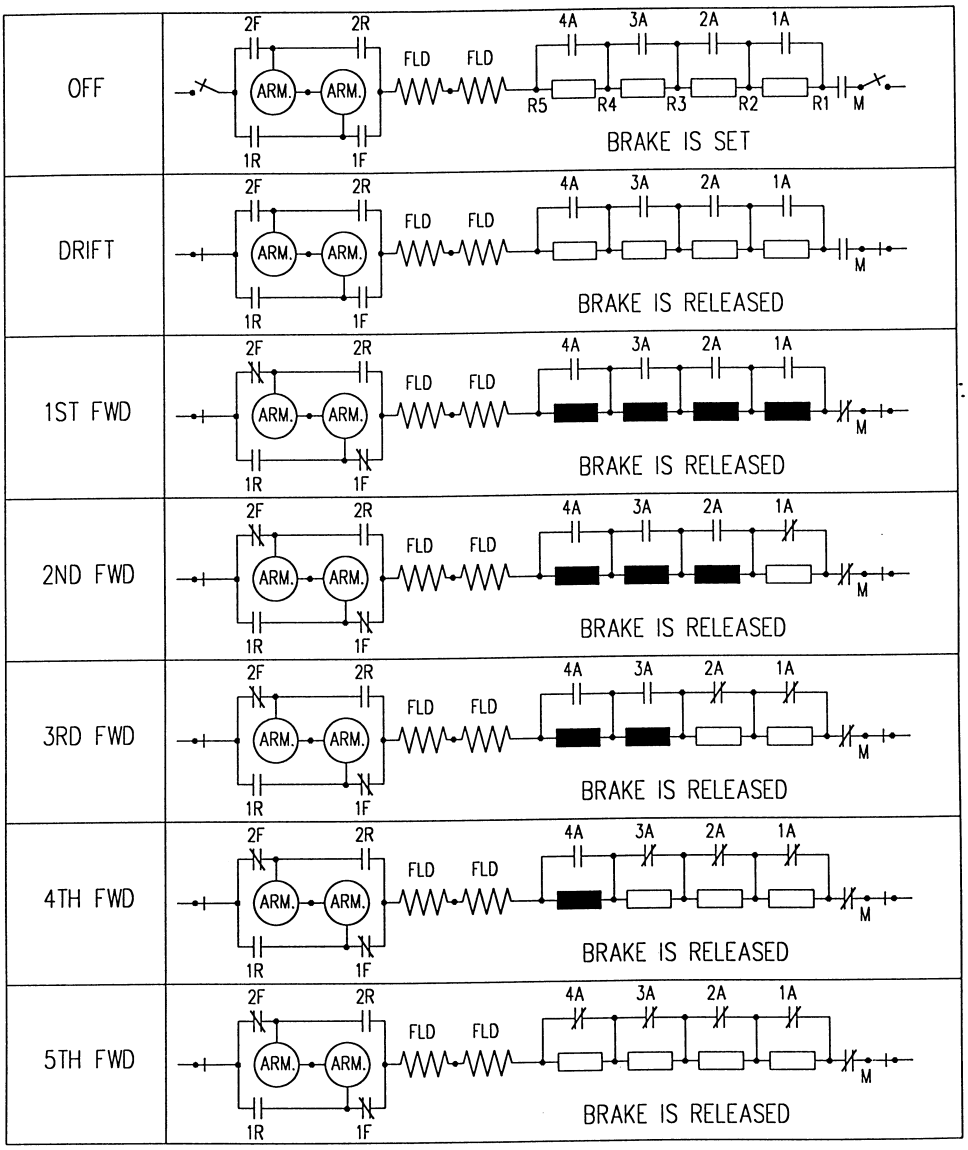

FIGURE 35
DC SERIES-WOUND MOTOR BRANCH CIRCUIT (CURVED TRACK TRAVEL DRIVE)

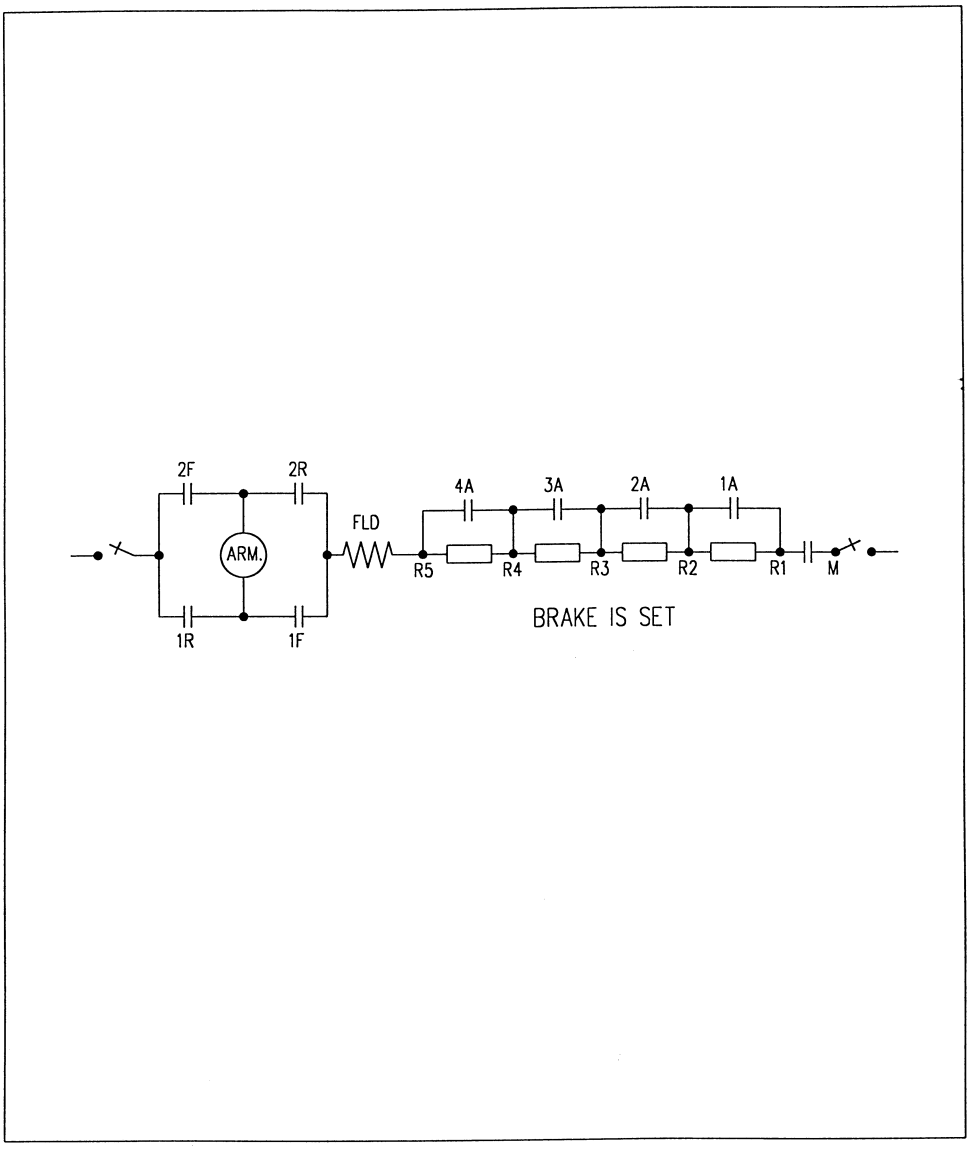

FIGURE 36
DC SERIES-WOUND MOTOR BRANCH CIRCUIT (STRAIGHT TRACK TRAVEL DRIVE) (OFF POSITION)

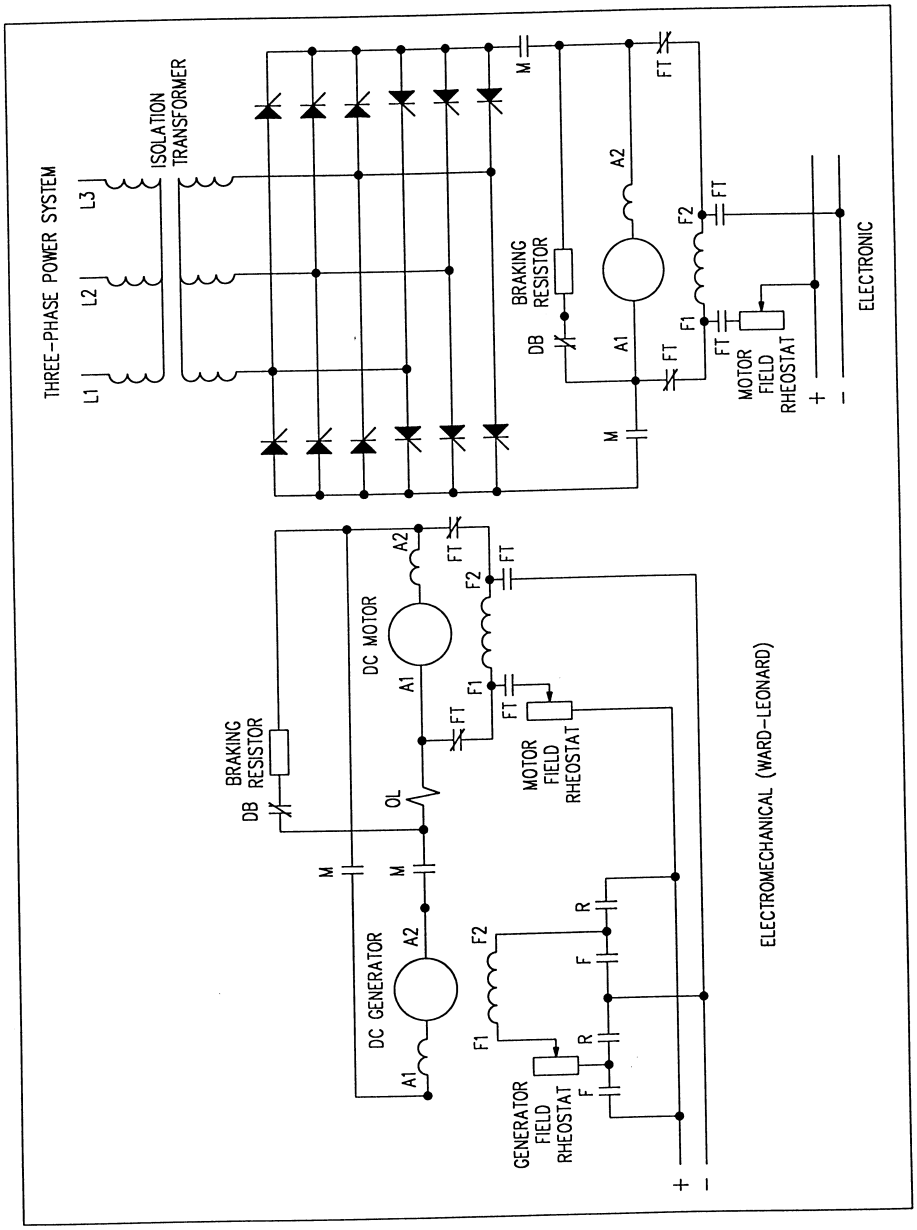

FIGURE 37
DC SHUNT-WOUND MOTOR BRANCH CIRCUITS (ADJUSTABLE VOLTAGE CONTROLS; HOIST OR TRAVEL DRIVES)

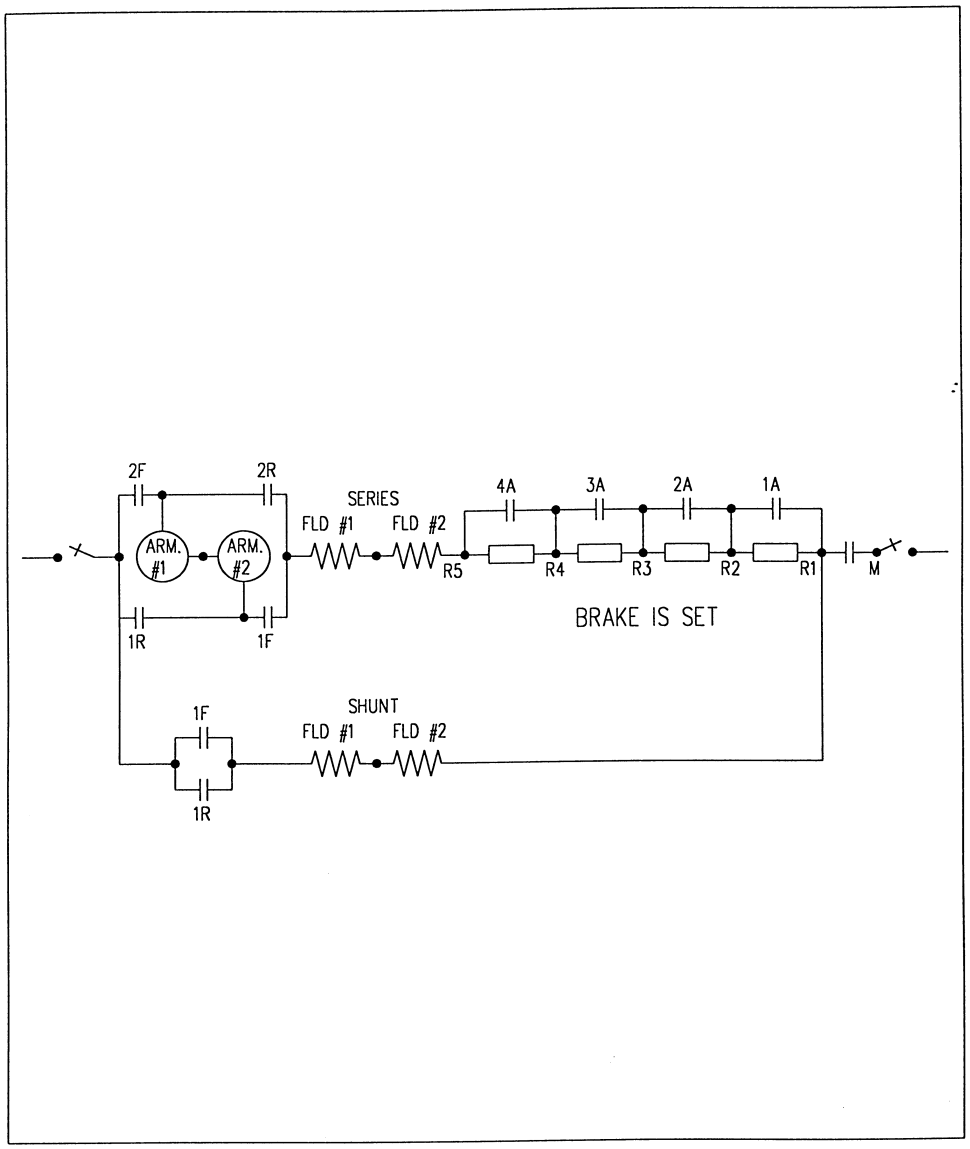

FIGURE 38
DC COMPOUND-WOUND MOTOR BRANCH CIRCUIT (CURVED TRACK TRAVEL DRIVE) (OFF POSITION)

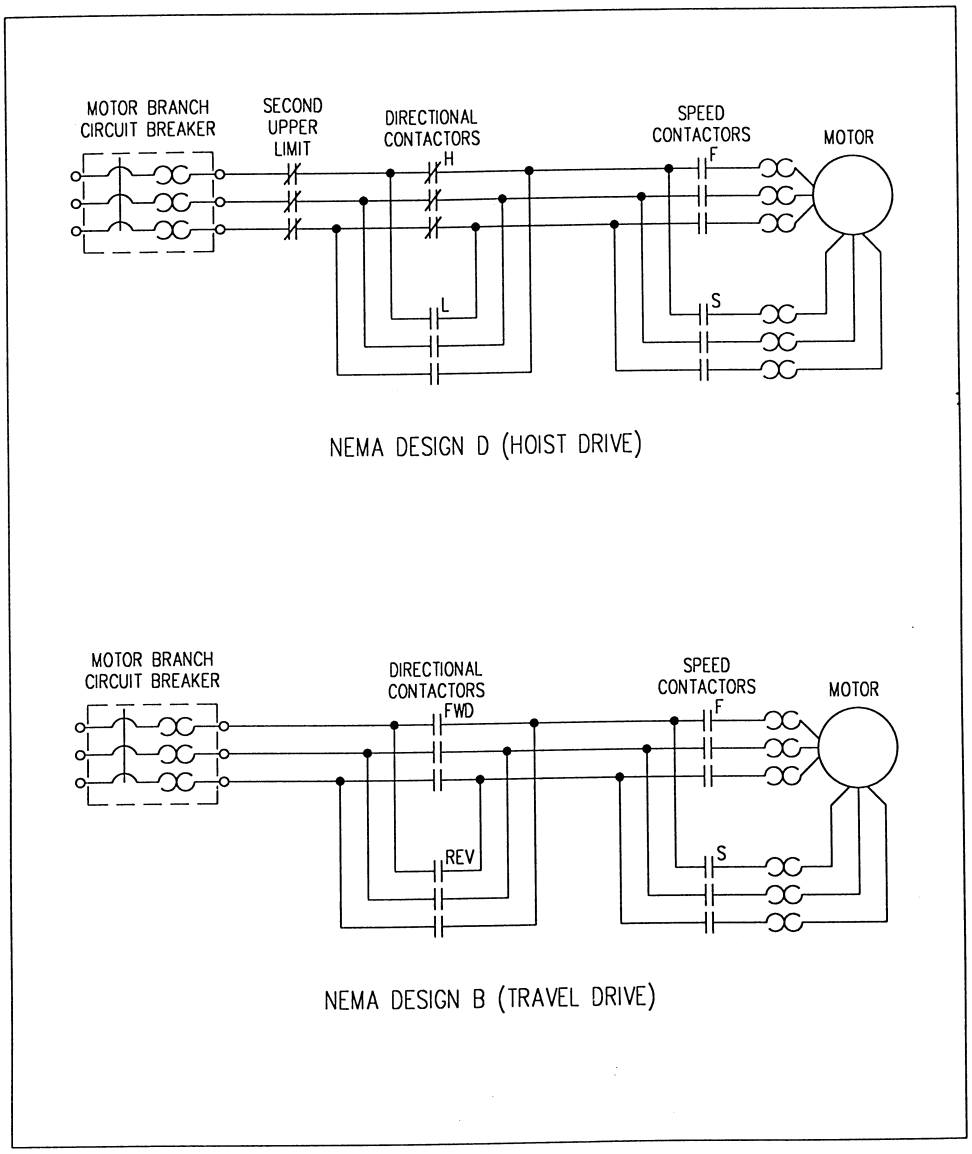

FIGURE 39
AC SQUIRREL CAGE MOTOR BRANCH CIRCUITS

It is intended for portal crane travel drives, as above, but for locations with high wind gusts.

(DC compound-wound motors are not used on hoist drives; therefore no motor branch circuit is shown for that application.)

5.5.3.2 AC Motor Branch Circuits. Figure 39 illustrates the simplicity of the squirrel cage motor branch circuits, which in large part accounts for the drives' reliability.

Figures 40 and 41 show the integration of the secondary resistances in the wound-rotor motor branch circuit.

Figure 49 also highlights the role of the eddy-current brake in a hoist drive. It applies a major retarding torque to limit the speed in the first two hoisting speed points and prevents overhauling in the first four lowering speed points.

5.5.4 Speed-Torque Curves. The motor speed-torque (or hook speed-load) curves, which define the crane drives' behavior at various loads and operator's control inputs, are constructed using the characteristic curves and the motor branch circuits.

Figures 42 through 47 are representative motor speed-torque curves of motors and their control circuits in typical crane drives, and are correlated with the quadrants of operation. Figures 48 and 49 are hook speed-load curves for hoist drives with AC wound-rotor motors and supplemental brakes; that is, mechanical load brake or an eddy-current brake. The presence of these brakes shields the motors from the full effect of the hook load, and restricts the drive motors to operation only in Quadrants I and IV; the motors are never subjected to the conditions normally associated with Quadrants II and III. Therefore, the drives' behavior is depicted by the relationship of hook speed and hook load, rather than motor speed and motor torque.

It is desirable for the motor speed-torque curves and hook speed-load curves to be approximately equidistant in all quadrants. Once the required high and low speeds are established by the selection of the electrical circuit design, the intermediate speed points are obtained by the proper selection of resistances, or other braking means.

5.5.5 Sizing and Selection of Components. Following are the criteria to be utilized for the sizing and selection of certain crane components. All electrical components are required to be the industrial or marine grade products of manufacturers specializing in the production of this type of equipment.

5.5.5.1 Diesel Engine-Generator Sets. Diesel engine-generator sets on Navy cranes are small industrial power plants, used whenever outside electric power is not convenient. They account for most of the operating costs of the crane and most of the outages for repair and overhaul. Therefore, reliability, long life, and low maintenance cost are the desirable characteristics.

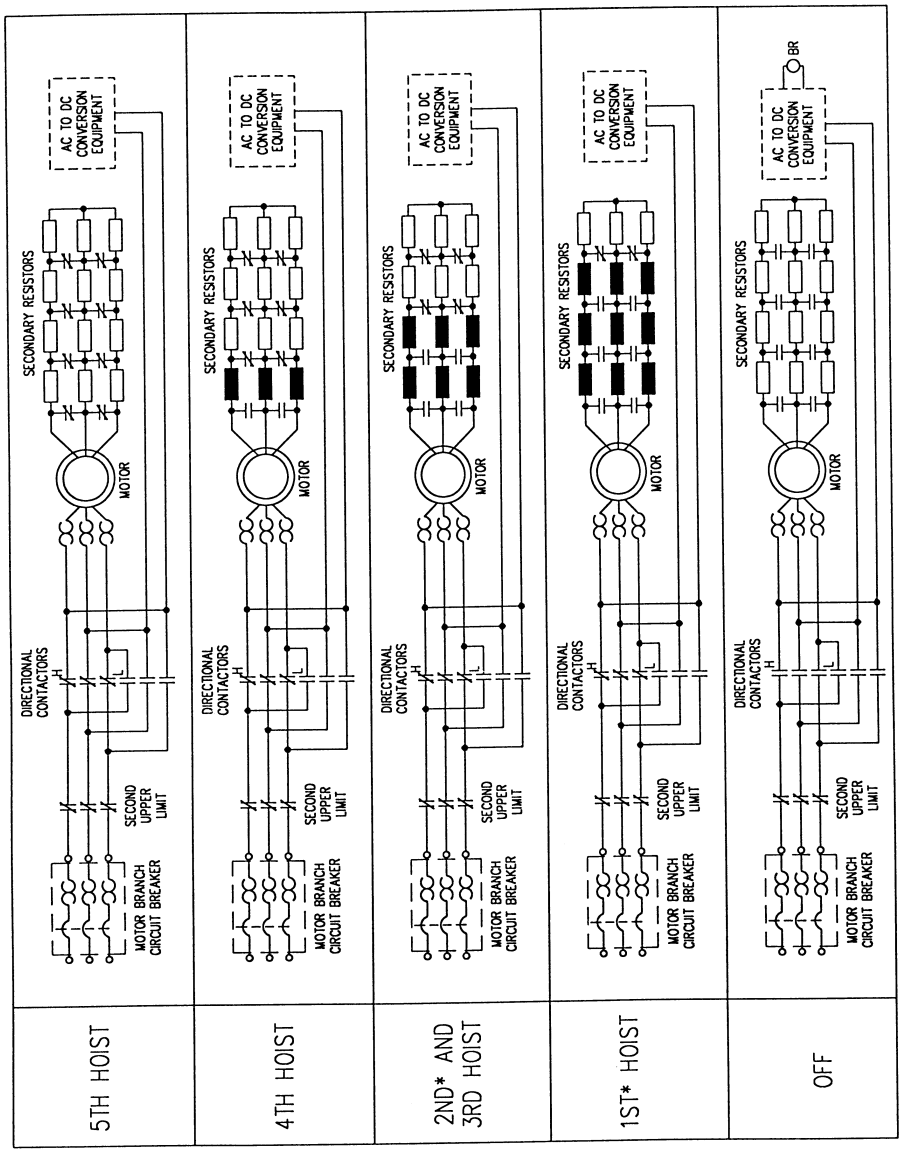

*.EDDY-CURRENT BRAKE IS ENERGIZED

FIGURE 40A
AC WOUND-ROTOR MOTOR BRANCH CIRCUITS (HOIST DRIVE)

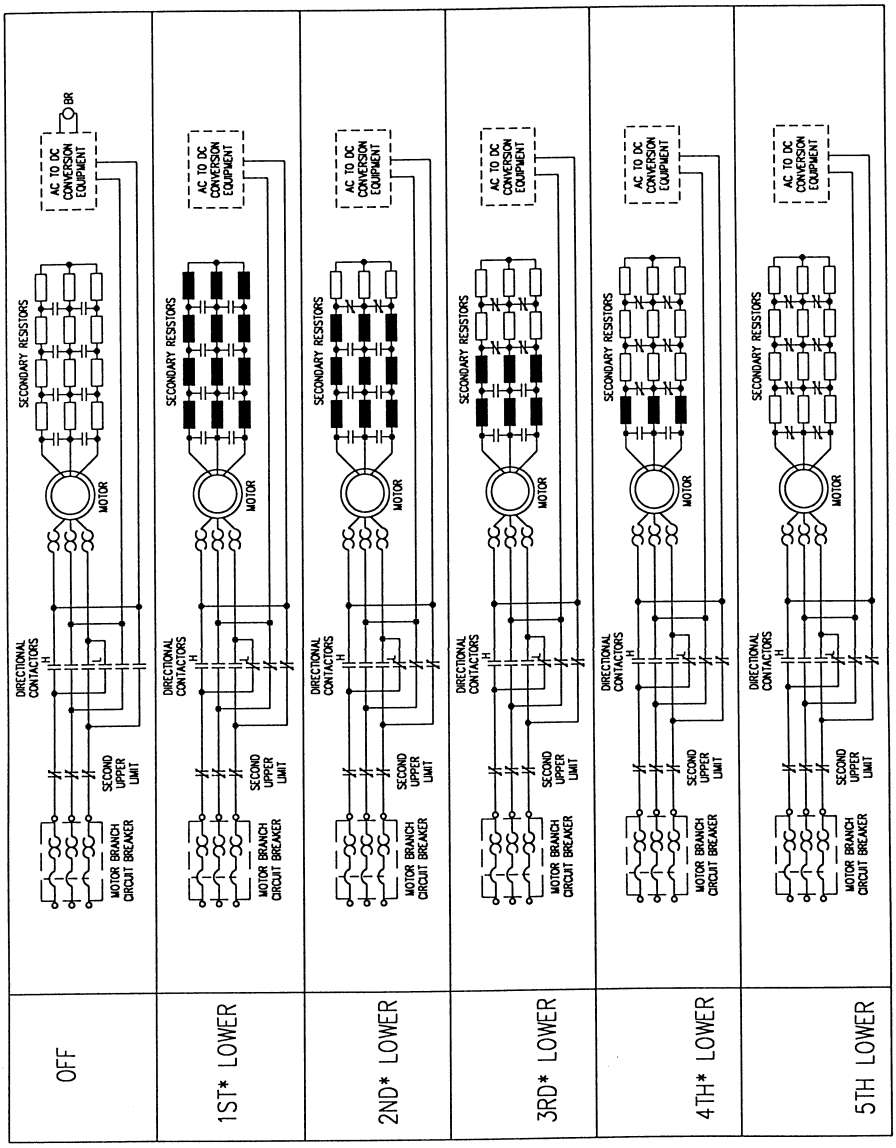

*·EDDY-CURRENT BRAKE IS ENERGIZED

FIGURE 40B
AC WOUND-ROTOR MOTOR BRANCH CIRCUITS (HOIST DRIVE)

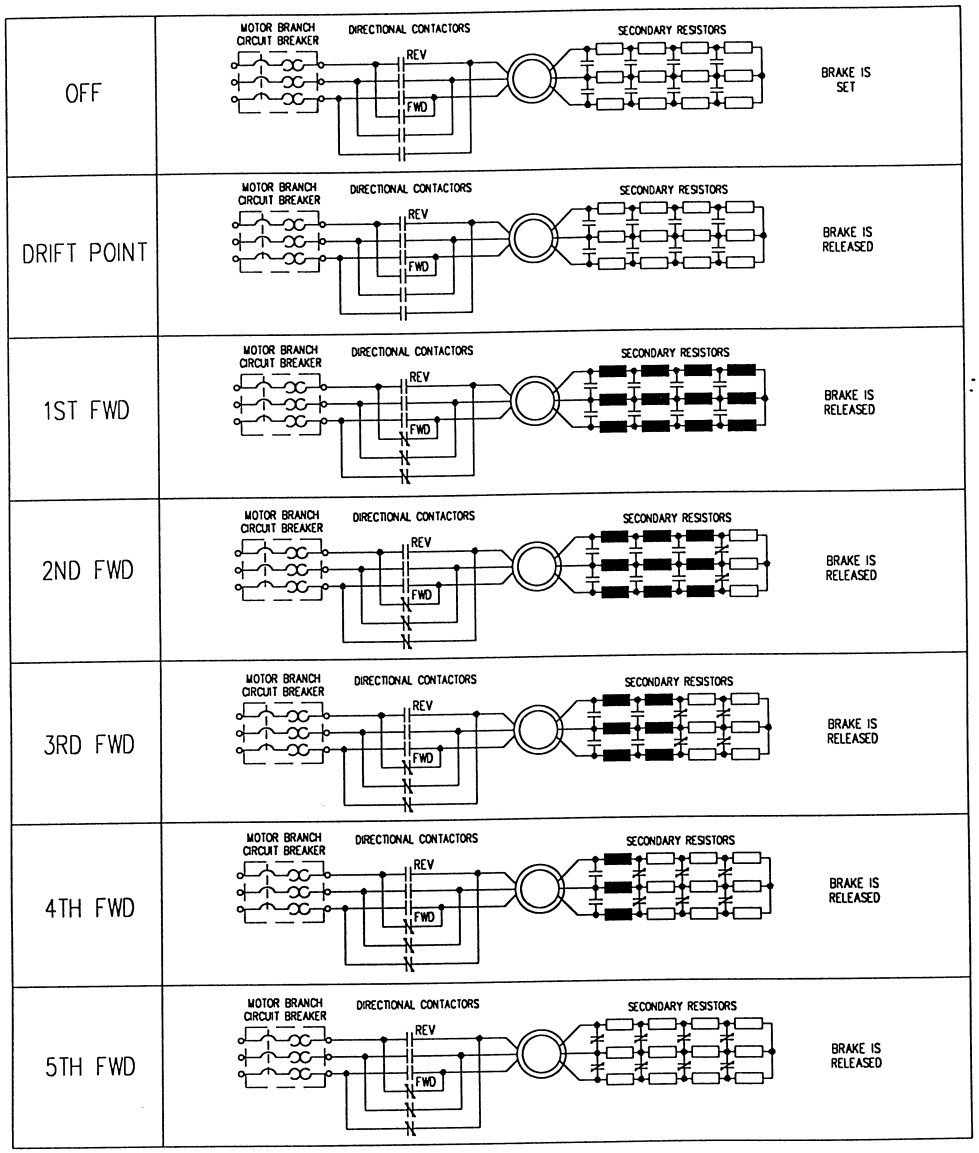

FIGURE 41
AC WOUND-ROTOR MOTOR BRANCH CIRCUIT (TRAVEL DRIVE)

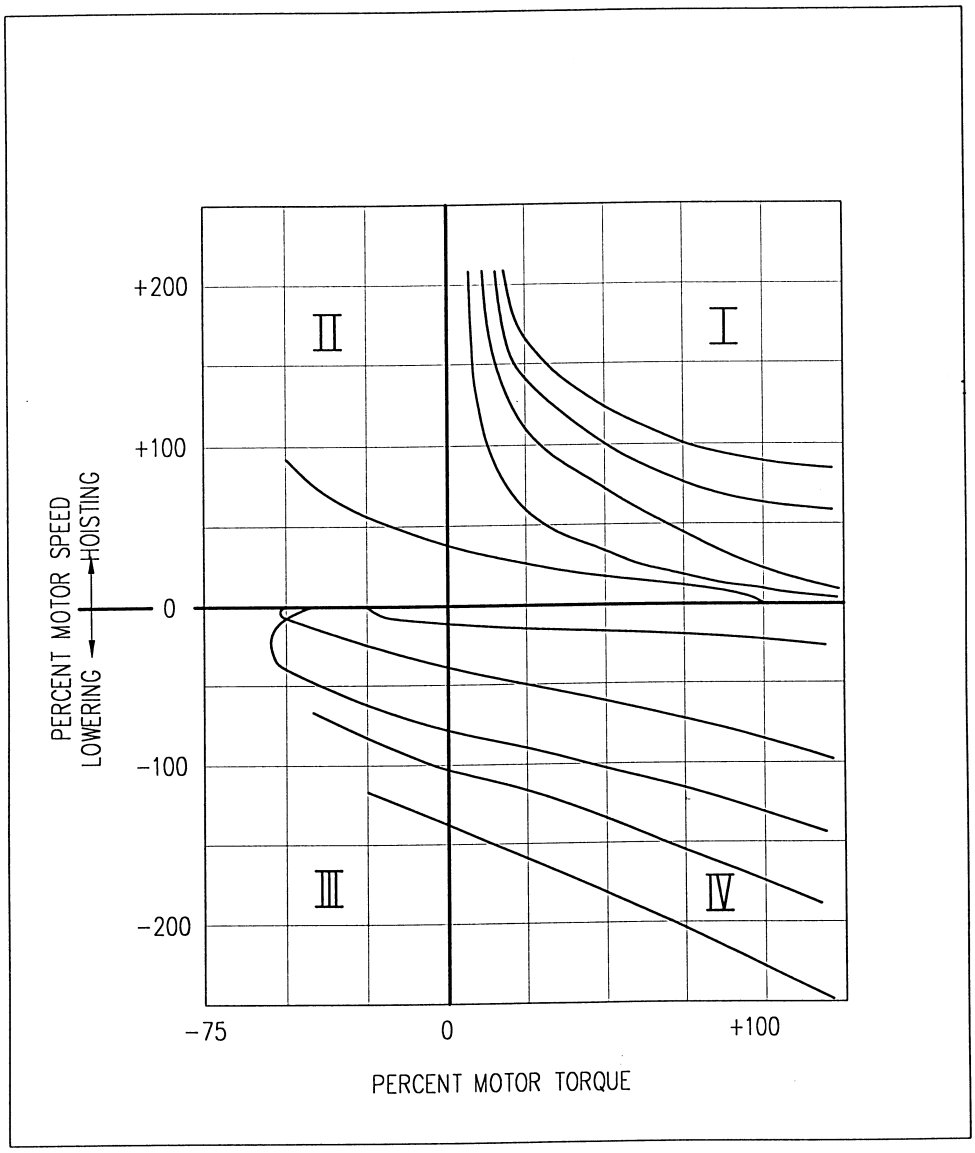

FIGURE 42
DC SERIES-WOUND MOTOR SPEED-TORQUE CURVES (HOIST DRIVE)

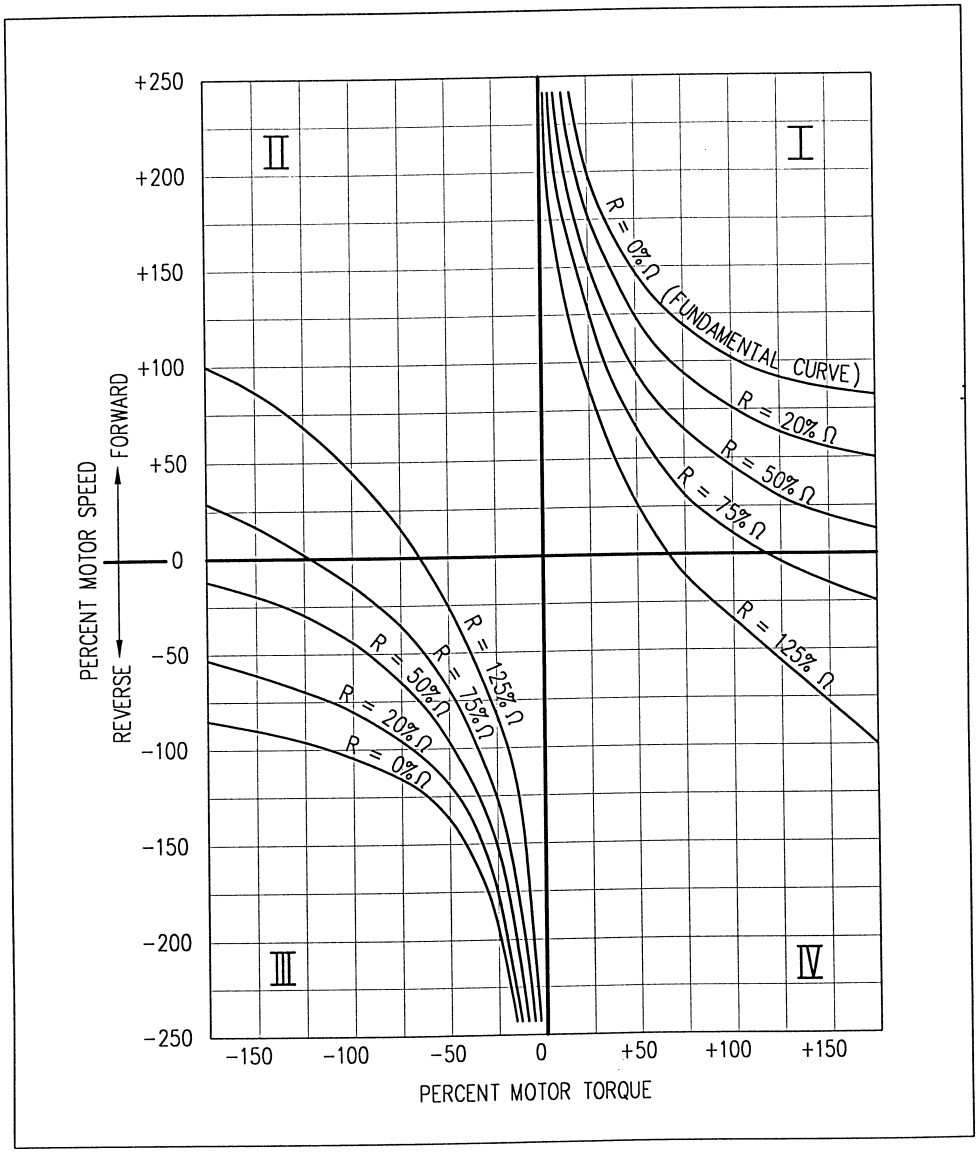

FIGURE 43
DC SERIES-WOUND MOTOR SPEED-TORQUE CURVES (TRAVEL DRIVE)

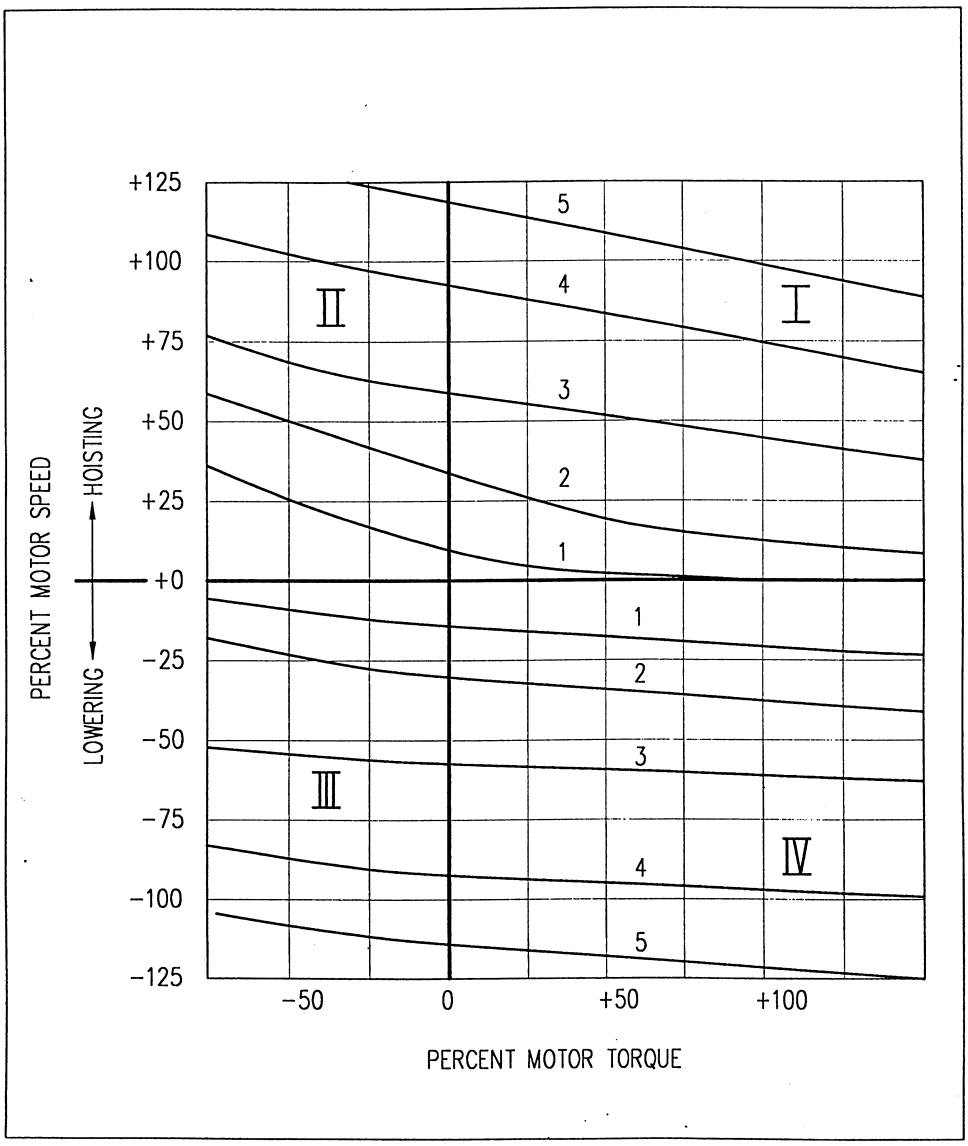

FIGURE 44
DC SHUNT-WOUND MOTOR SPEED-TORQUE CURVES (HOIST AND TRAVEL DRIVES)

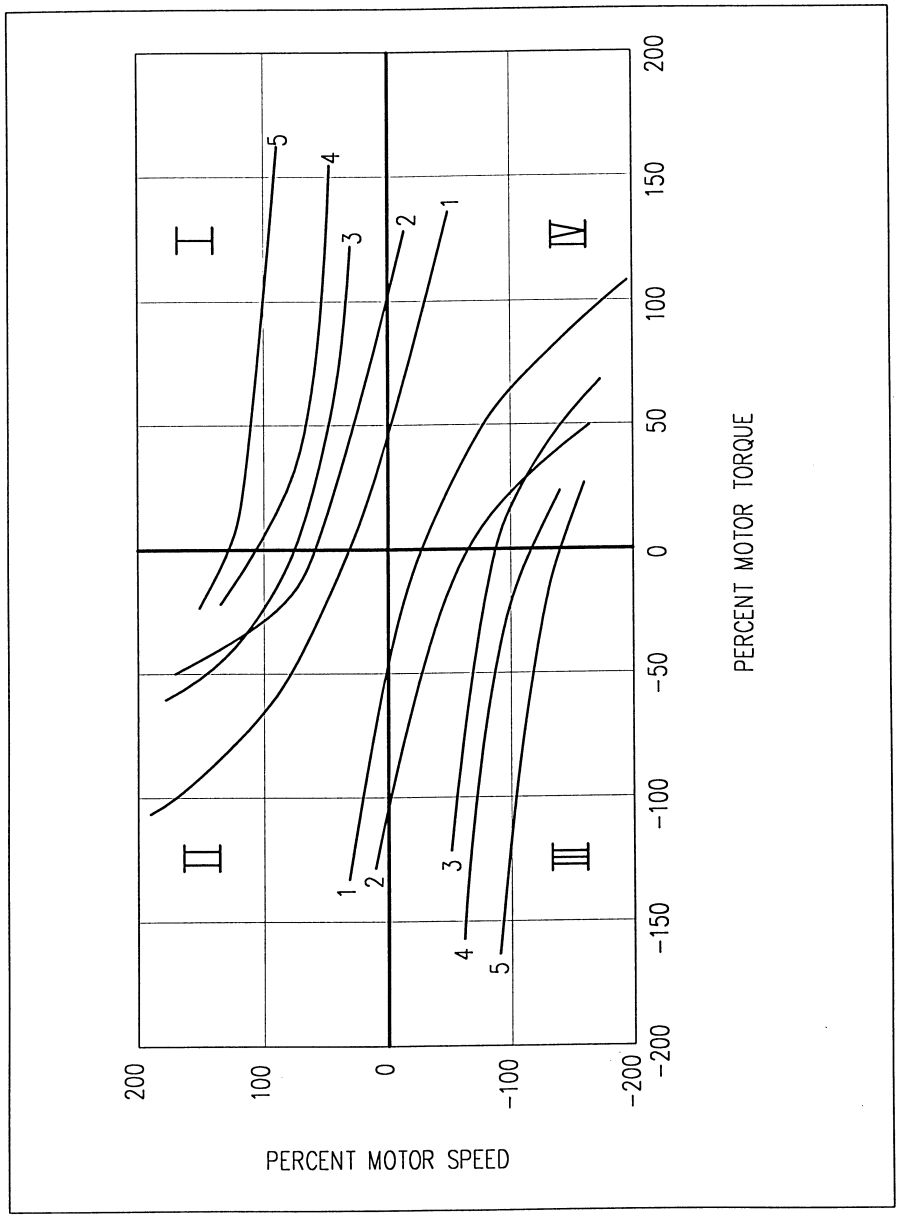

FIGURE 45
DC COMPOUND-WOUND MOTOR SPEED-TORQUE CURVES (TRAVEL DRIVES)

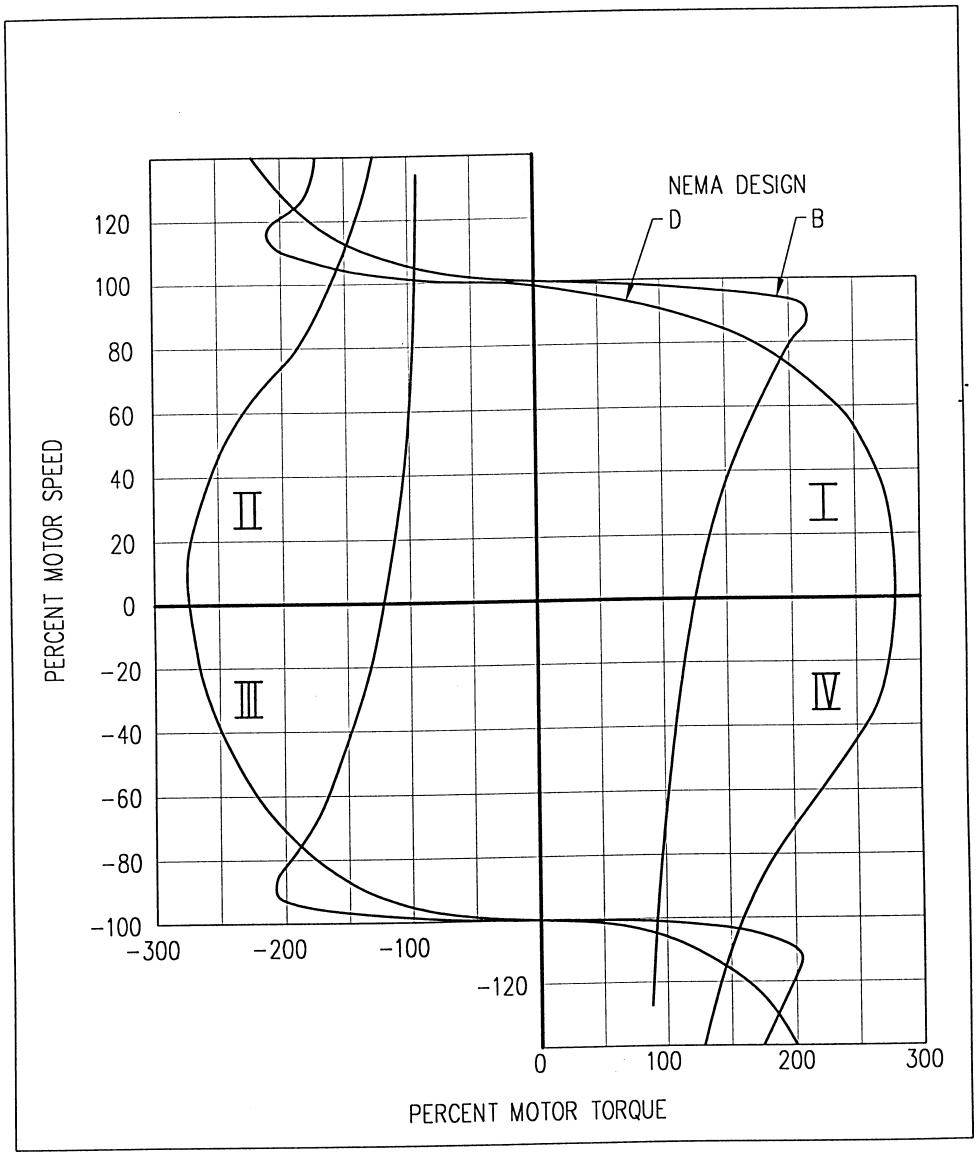

FIGURE 46
AC SQUIRREL CAGE MOTOR SPEED-TORQUE CURVES (HOIST AND TRAVEL DRIVES)

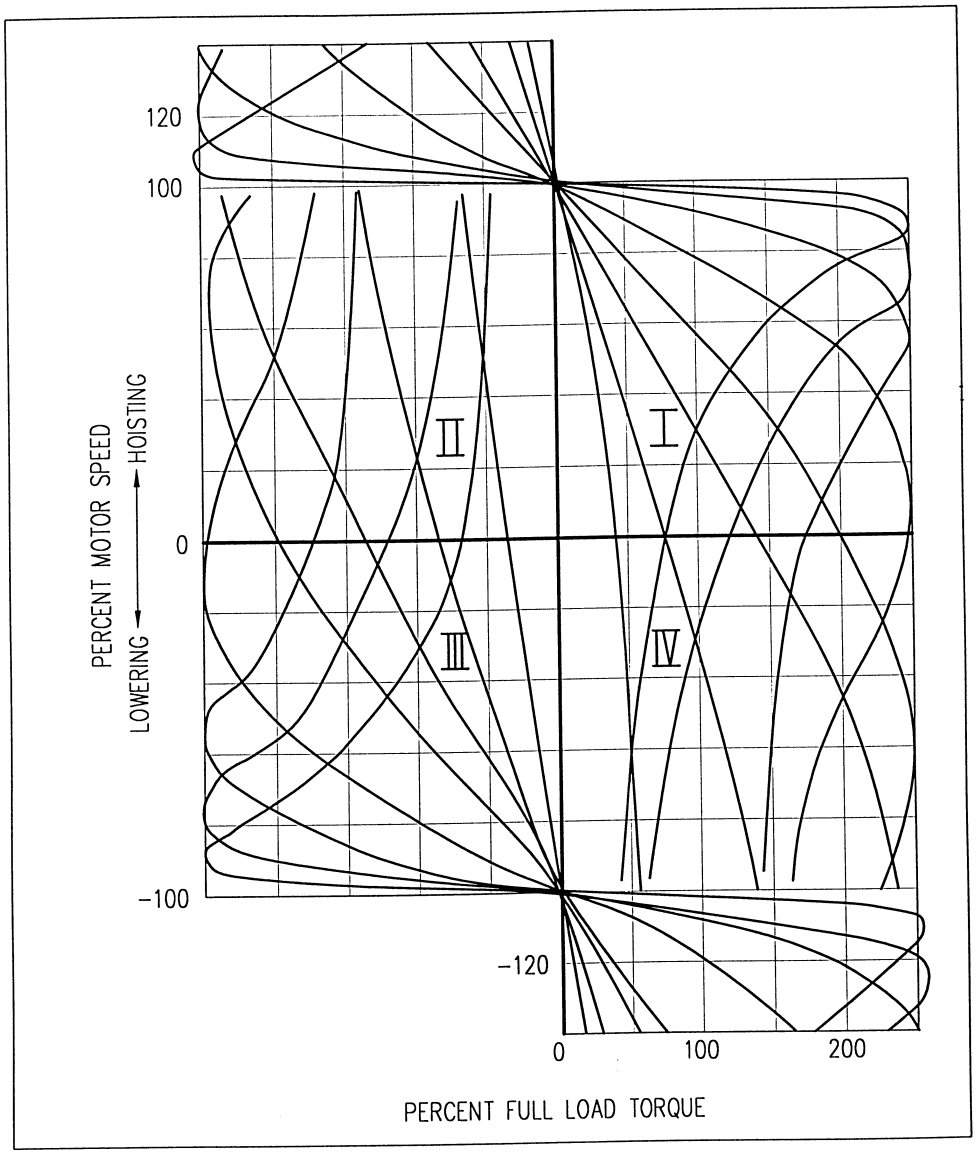

FIGURE 47
AC WOUND-ROTOR MOTOR SPEED-TORQUE CURVES (HOIST DRIVE; REGENERATIVE BRAKING)

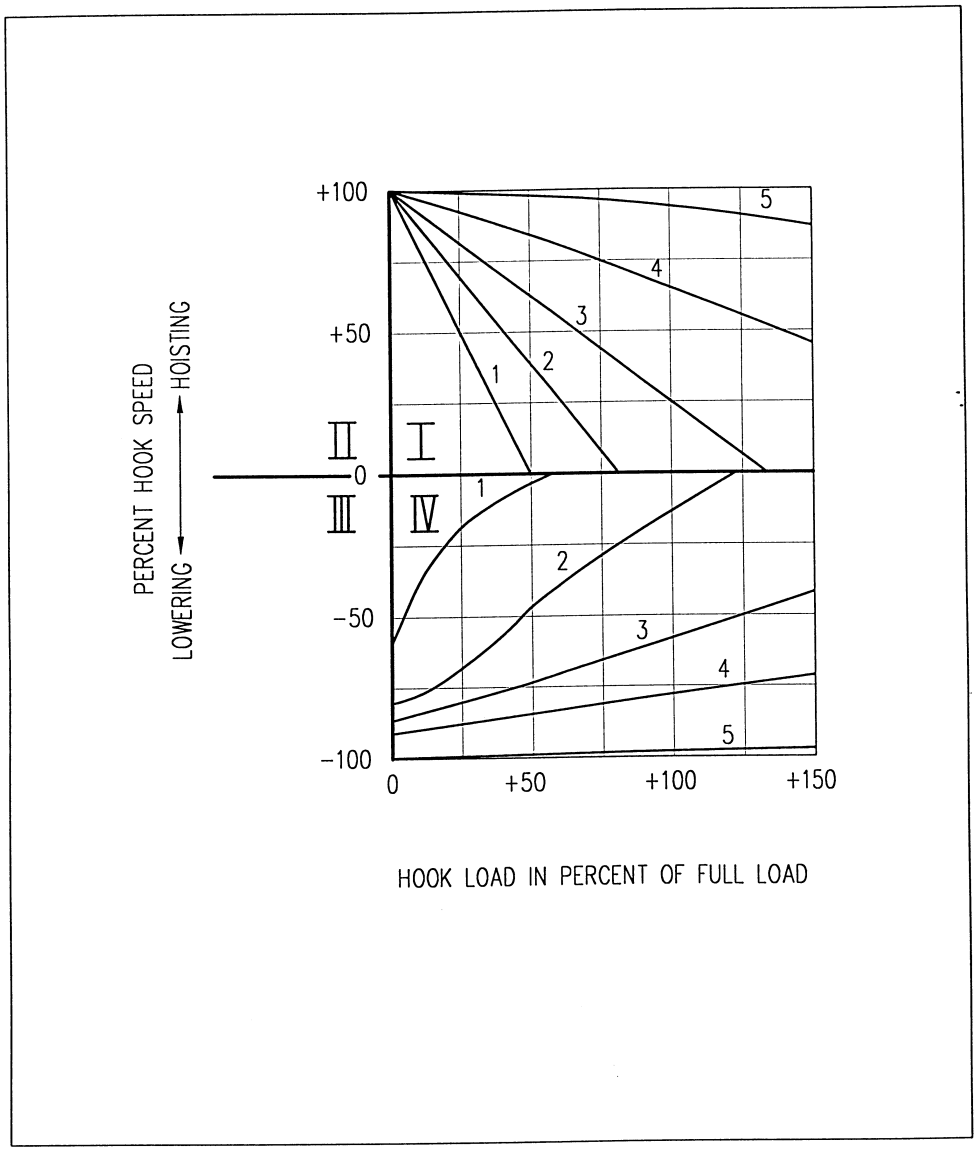

FIGURE 48
HOOK SPEED - HOOK LOAD CURVES
(AC WOUND-ROTOR MOTOR DRIVEN HOIST, WITH MECHANICAL LOAD BRAKE)

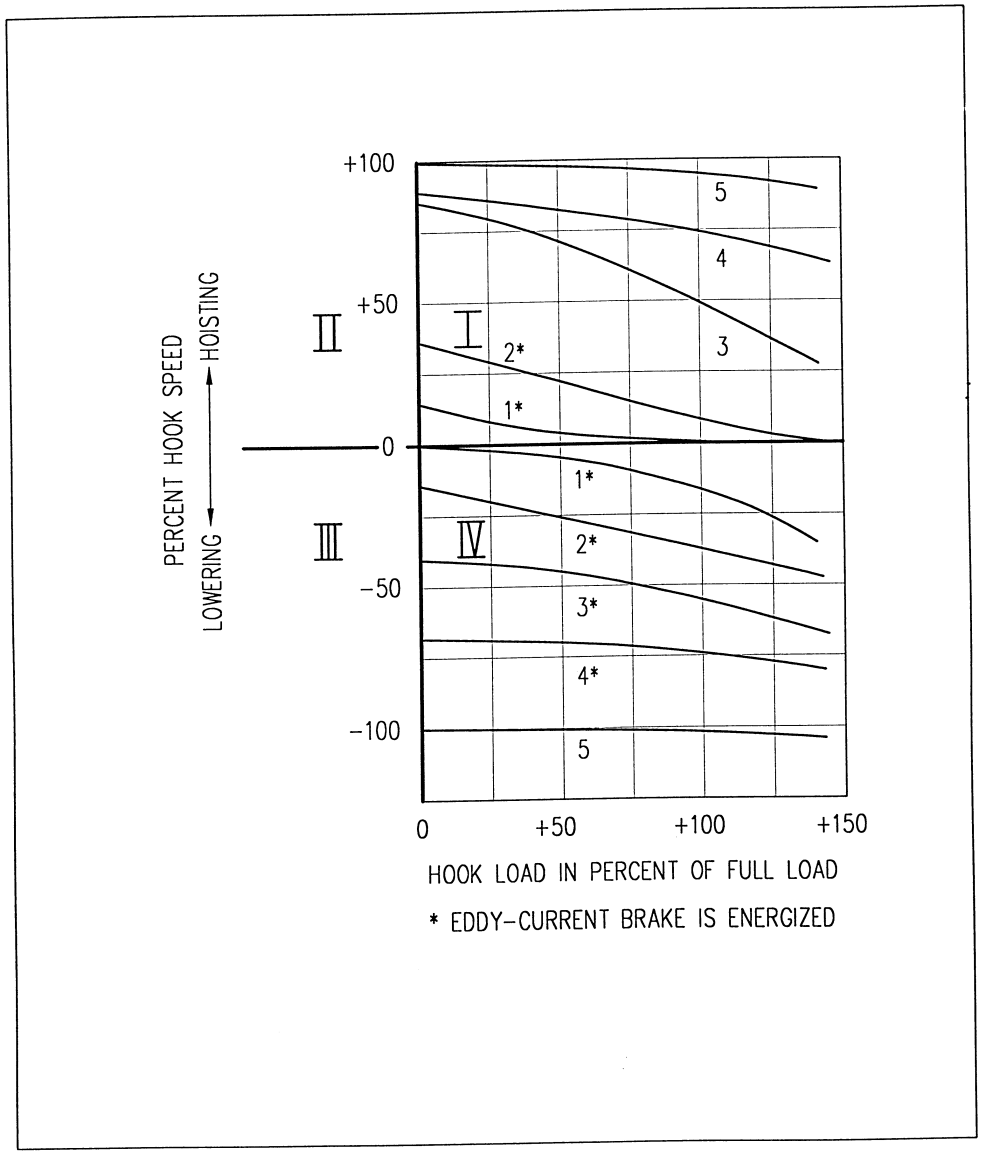

FIGURE 49
HOOK SPEED - HOOK LOAD CURVES (AC WOUND-ROTOR MOTOR DRIVEN HOIST, WITH EDDY-CURRENT BRAKE)

The two essential determinants, both of which are considered decisive characteristics of a diesel engine, are (a) horsepower (hp) and (b) revolutions per minute (rpm). Brake mean effective pressure (bmep) and piston speed are no longer considered to be essential determinants. Formerly, the following values had been accepted as the norm for each of the determinants: (a) an intermittent rating not more than the actual horsepower requirements of the crane and (b) 514 to 720 rpm. Bmep was previously limited to not more than 85-psi (g) and piston speed to not more than 1300 fpm. Now the following determinants are required to be used: (a) horsepower required to accelerate the largest drive with two others operating at rated load plus ancillary power requirements and (b) 1800 rpm. The number of cylinders has little significance because the engines normally operate at all times at full governed speed. Preference in competition should not be given to the number of strokes per cycle (2 or 4) because modern engines have been designed to overcome the disadvantages of each. Diesel engine-generator sets are required to be sized so that the crane drive with the largest motor(s) can be accelerated to its rated speed while the two drives with the next largest motors are operating at rated load/rated speed and the normal complement of ancillary equipment is functioning. The diesel engine of a portal crane is required to be selected, based on its prime rating, utilizing the following formula:

EQUATION $$D = (1.5)(T) + (H) + (M) + (1.675)(A) \quad (13)$$

Where

D = Diesel engine prime rating in horsepower
T = minimum calculated running travel drive horsepower
H = minimum calculated running main hoist horsepower
M = minimum calculated running horsepower for the third largest drive
A = ancillary loads (transformer rating in kVA)

An engine mounted thermal circulation tank-type immersion water heater, incorporating an adjustable thermostatic switch, is required to be installed. In colder climates, an external unit for heating of engine cooling fluid and lubricating oil when the engine is not operating is required to be used instead. All heaters are required to be fed from a separate panel dedicated to equipment heater and battery charger circuits. The fuel tank should be an independent, removable component of the crane; it should be bolted to the supporting structure. The interior of the tank should be accessible for inspection and cleaning. Its capacity should be at least 1100-gallons. Provisions are required to be made for filling the tank from ground level.

Depending on the type of power needed for the drives on the crane, the generator driven by the diesel engine is either an AC or DC unit. On some cranes with DC motors in the drives, an AC generator is used with the AC power being electronically converted to DC power. Generators are required to be oversized to take advantage of the “flywheel effect” to ride through short term overloadings of the diesel engine. Generators are required to be selected based upon the power required to simultaneously accelerate the three largest drives operating at rated load plus ancillary power requirements. The generator of a portal crane is required to be selected, based on its continuous rating, utilizing the following formula:

EQUATION $$G = (1.12)(T + H + M) + (1.25)(A) \quad (14)$$

Where

G = generator rating in kW
T = minimum calculated running travel drive horsepower
H = minimum calculated running main hoist horsepower
M = minimum calculated horsepower for the third largest drive
A = ancillary loads (transformer rating in kVA)

Anti-condensation heaters are required to be installed in generators. They are required to be de-energized whenever the generators rotate. All heaters are required to be fed from a separate panel dedicated to equipment heater and battery charger circuits.

The diesel engine driving the auxiliary diesel engine-generator set is a much smaller machine than is the main diesel engine. The horsepower rating of the diesel engine, and the power rating of the auxiliary generator, should be based upon, in addition to lighting and other ancillary loads, the power requirements of the charger for the diesel engine's own batteries and of the motor for the air compressor associated with the starting system for the main diesel engine, if used. The diesel engine's speed is 1800 rpm for continuous duty applications or 3600 rpm for intermittent duty applications.

5.5.5.2 Motor-Generator Sets. Power conversion to DC from AC for electro-mechanical adjustable voltage DC systems is accomplished through the use of motor-generator sets. The generators are required to be rated for continuous duty operation. The motor is required to be sized for simultaneous operation of specific drives. The motor-generator set is required to be provided with a reduced-voltage type squirrel cage motor starter with thermal overload protection, a generator field quenching circuit, and edgewound generator field resistors. Generator output voltage is required to be varied by the use of magnetic field relays to shunt out segments of the field resistors or by the use of a manually operated rheostat. (Drive motor direction is required to be changed by reversal of generator field polarity.) Particular attention is required to be given to the positioning of the generators so that the brushes are easily accessible for maintenance and inspection.

5.5.5.3 Motors. The selection of the type of motor to be used in a given drive train is dependent upon the type of power that is available to energize the motor, the desired performance characteristics for the drive, and the type of control equipment that is preferred. Motors are designed either to operate on alternating current power or to operate on direct current power. Therefore, the selection of the type of motor to be used is limited to those which would operate on the power available. Generally, AC power is available on bridge cranes and AC or DC power is available on portal, floating, or container cranes. Motor speed is either affected by the load or it isn't. So, if constant speed, regardless of load, is desired, a squirrel cage AC motor or a shunt-wound DC motor is to be the choice. If faster speed with lighter loads under the hook is desirable, then a wound-rotor AC motor or a series-wound DC motor is to be selected. The total gear ratio between a motor and its driven load is required to be computed, not on the motor's base or synchronous speed, but on the actual speed produced by the motor when developing the required torque to maintain the desired rated load running speed.

The size of the motor selected is required to be based upon design calculations. CMAA #70 formulas are required to be used for bridge, trolley, and hoist drive motors on bridge cranes. For hoist motor sizing calculations, the factor “Kc” is required to be greater than 1.0. For bridge and trolley drive motor sizing calculation, the factor “E” is required to be the published gear reducer efficiency rating(s). Calculations for hoist motors on portal, floating, and container cranes are required to take into account the reeving arrangement. Calculations for rotate motors on portal and floating cranes are required to take into account wind loading; additionally, calculations for floating cranes must also account for the effects of the list and trim of the barge on motor loading. Calculations for travel drive motors on portal cranes are required to take into account the unique loadings attributable to the crane starting up and travelling through curves. Also, for both rotate and travel drives, the effects on motor loading of drive operation with one rotate drive motor or a pair of travel drive motors out of service must be considered. However, the travel motors on a portal crane are required to have a combined total 60-minute horsepower rating of not less than as determined by the formula:

EQUATION $$HP = (534.75 \times 10^{-9})\,(W)(V) \qquad (15)$$

Where

W = total weight of crane plus hook load, in pounds
V = rated travel speed of crane, in feet per minute.

The selection of the motors for container cranes is based upon a theoretical duty cycle that describes the energizing/de-energizing and load variation with respect to time. It permits the determination of the peak torque and the calculation of the root-mean-square (RMS) horsepower that will indicate the proper motor rating from a heating standpoint. The load RMS horsepower is used to determine the required motor thermal capability at constant speed. The motor must also be capable of carrying the peak torque.

If a flux vector controller is used for a hoist drive, the drive motor is required to be an AC single speed vector design, with blower and encoder, squirrel cage induction type. If an adjustable frequency controller is used with a bridge or trolley drive, the motor is required to be an AC single speed inverter duty squirrel cage induction type. When a hoist drive motor is a two-speed squirrel-cage motor, a mechanical load brake is required to be provided.

Motor insulation is required to be Class H, but with a Class B temperature rise. On newer outdoor cranes, an anti-condensation heater is required to be installed in every drive motor. It is required to be de-energized whenever the motor rotates. All heaters are required to be fed from a separate panel dedicated to equipment heater and battery charger circuits.

5.5.5.4 Control Equipment. The range of complexity of motor control equipment is extensive; ease of maintainability is inversely proportional to the complexity of the equipment. The following is a list of the various types of motor controls in order of increasing complexity: AC electro-mechanical for squirrel cage motors, AC electro-mechanical for wound-rotor motors, DC electro-mechanical adjustable voltage, DC constant potential, AC adjustable frequency, AC flux vector, and DC electronic adjustable voltage.

Each motion of a crane is required to be controlled by a separate controller. Each controller is required to be electrically and mechanically interlocked between directions; mechanical interlocks are not required for solid state controllers. Bridge and trolley motor stepped control systems on bridge cranes, rotate motor stepped control systems on portal and floating cranes, and travel motor stepped control systems on portal cranes are required to be provided with a drift point between OFF and the first speed control point in each direction. All electrical components are required to be located so they are easily accessible for inspection and maintenance.

On all cranes with cabs, an operator controlled warning horn capable of producing a maximum audio signal of not less than 100 db at 10 feet is required.

On outdoor cranes, a thermostatically controlled anti-condensation heater is required to be installed in each control panel enclosure. It is required to be selected to provide 7 watts per cubic foot. All heaters are required to be fed from a separate panel dedicated to equipment heater and battery charger circuits.

5.5.5.5 AC Control Equipment. All AC control circuits are required to be fed from a single phase, air cooled, double wound transformer with a grounded metal screen between the primary and secondary windings of the transformer. “Single phasing” protection is required to be provided in all AC controllers for hoist drives. Plugging protection is required to be provided for bridge and trolley drives with AC squirrel cage motors.

For bridge and trolley drives with AC squirrel cage motors, an electrical torque reduction unit, utilizing solid state components, is available to operate with each motor’s electromagnetic controller to limit torque when the motor is starting or changing speed. The unit is specifically designed and marketed as a standard commercial product for use on cranes. Maximum torque is adjustable. The length of time the unit limits torque, subsequent to motor starting or changing speed, is adjustable. If used, the unit is required to be sized so as to provide sufficient starting torque to initiate motion of the motor from standstill with rated load under the hook.

Each AC adjustable frequency and flux vector controller is required to be sinusoidal pulsewidth modulation type in accordance with NEMA ICS 7. Each controller is required to include a full wave rectifier and a three-phase inverter. Each adjustable frequency controller is required to be selected so that its continuous current rating is not less than 200 percent of full load motor current; their peak inverse voltage ratings are required to be greater than 200 percent of the working peak inverse voltage. A flux vector controller is required to enable the motor to develop full torque continuously at zero speed. Each controller is required to include as a minimum: electronic instantaneous overcurrent protection, undervoltage protection, DC bus overvoltage protection, ability to withstand output line-to-line shorts without component failure, and continuous auto restart for source related faults only. Transients and harmonics protection are required to be provided; provision of standing wave protection is required for specific installations. Acceleration time and deceleration time are required to be independently adjustable from 2 to 20 seconds. The motors are required to run smoothly, without torque pulsations at the lowest speed, and are required to be energized at a frequency not exceeding 60 Hz at the highest speed. Motor overload protection is required to

utilize a thermal sensitive device embedded in its windings. Dynamic braking is required to be provided. Resistors are required to be connected to the controller's DC bus whenever motor regeneration causes the DC voltage to rise to a predetermined unacceptable level. The resistors are required to be rated at a minimum of 150 percent of full load motor current continuously.

The control system for a wound-rotor motor is required to be provided with resistive or reactive secondary controls. Acceleration and deceleration is required to be smooth. The eddy-current brake is required to be excited with reduced voltage when the control is in the OFF position. An alternator and rectifier are required to be used to provide reduced voltage excitation of the eddy-current brake for emergency dynamic braking. It is required that operation of a hoist drive on any eddy-current brake controlled point be prevented upon loss of brake excitation.

5.5.5.6 DC Control Equipment. On electronic adjustable voltage DC control systems, four quadrant motor control is required, with each quadrant fully rated. A complete set of software programs and programming instructions is required to be obtained with microprocessor-based controls. The control is required to provide automatic regenerative braking for speed-reduction and slow down before electro-mechanical brake setting and, for hoist drives, dynamic braking, when the control is in the OFF position, and emergency dynamic braking to limit hook speed to a maximum of 40 percent of rated hoisting speed with rated load under the hook, in case of power failure or opening of any fuse or circuit breaker that affects control of the load. Controlled electric braking is required to be provided by feeding regenerated power back into the AC lines. All non-time delayed brakes are required to be set upon main line contactor de-energization. For hoist drives, it is required that the minimum movement of the master switch in the hoisting direction will not allow a hook block or boom to lower under rated load. All hoist drives are required to include torque proving circuitry that does not cause "roll-up" when lowering motion is initiated. The use of a fuse in a motor loop is prohibited. Motor direction is required to be changed by reversal of armature voltage polarity. Weakening of motor field strength during motor operation is not permitted. Speed regulation is required to be 1.0 percent with tachometer feedback and 5.0 percent with armature voltage feedback. Speed regulation is required to be flat from no-load to full-load. A –600V-0-+600V volt meter, indicating thyristor bridge output voltage for each drive, is required to be in the cab and on the drive's control panel. An ammeter, indicating current in the loop circuit, is required to be on each control panel and, for hoist drives, in the cab. Contacts of loop contactors are required to be silver-laminated copper.

5.5.5.7 Contactors. Contactors are used for line, directional, and accelerating functions. In their line function, contactors are used to connect and disconnect motors. Energization of the main line contactor is required to be controlled by the POWER OFF-POWER ON pushbutton on the pendent pushbutton station or in the operator's cab.

For DC motors, directional contactors are also used to connect the motor branch circuit to the other side of the line and are arranged so as to cause current to flow through the motor armature in one direction or in the opposite direction while not changing the direction of current flow through the field; this changes the direction of motor rotation. The direction of rotation of AC motors is changed by reversing two of the three leads to the motor. Reversing contactors are used for this purpose. They consist of two mechanically interlocked

contactors. They are also electrically interlocked by connecting a normally closed contact of one contactor in series with the coil of the other contactor. In their accelerating function, contactors are used to shunt motor current around resistors. For example, the armature voltage of a series-wound DC motor changes because magnetic contactors, which are used to provide distinct speed points, usually five, shunt out or add in segments of resistance connected in series with the motor. The rotor or secondary circuit of a wound-rotor AC motor is changed by using contactors to shunt out or add in various segments of resistance. Timed delay relays are commonly used to ensure that the operation of the accelerating contactors is sequent. A timed delay relay is connected in the control circuit in parallel with an accelerating contactor’s coil and is energized simultaneously. The contacts of the timed delay relay are connected in series with the coil of the accelerating contactor for the next higher speed point and their closing is delayed for a preset length of time. This prevents the accelerating contactor from being energized for that length of time.

Normally closed contactors are arranged to establish the emergency dynamic braking loop for DC hoist motors upon loss of power or when the controls are in the OFF position. If the motor is being back-driven under these circumstances by an overhauling load, it acts as a self-excited generator and retards the load.

It is required that the requirements of NEMA Standards Publication No. ICS 8 for controllers for DC motors used on cranes be met. ICS 8, Parts 2 and 3 have tables listing the minimum equipment for constant-potential and adjustable voltage systems, respectively. These tables address the quantity and function of protection equipment, contactors, and switches. Other tables list 230 VDC ratings for DC contactors. The horsepower ratings for each size of contactor, are approximately 50 percent higher than its comparable general-purpose rating in ICS 2, Part 5. Although the horsepower rating of contactors for adjustable voltage controllers at voltages other than 230 VDC is proportional to the voltage, specific ratings are given for contactor use at 500 or 550 VDC in constant-potential controllers. The minimum size of DC contactor used is required to be NEMA Size 3. It is required that the requirements of NEMA Standards Publication No. ICS 8 for controllers for AC wound-rotor motors used on cranes be met; for squirrel cage motor controllers, the requirements of ICS 2, Part 2, for general-purpose controllers, are to be met. ICS 8, Parts 4 and 5 have tables listing the minimum equipment for magnetic and electronic controllers, respectively. These tables address the quantity and function of protection equipment, contactors, and switches. Definite purpose contactors are inexpensive and have ratings assigned to them by their manufacturer based upon relatively low duty cycles. Although intended for use on light duty cranes, these reversing contactors may also be used on small elevators, overhead doors, or commercial laundry equipment. The use of definite purpose contactors, where not originally provided by the OEM, is prohibited. Contactors manufactured to the standards of the International Electrotechnical Commission (IEC) are not assigned sizes as are NEMA rated contactors. IEC contactors are assigned utilization categories, based upon defined applications, and motor rating, in kilowatts. If IEC contactors are used, all conductors connected to them are to have a minimum temperature rating of 75 degrees (Centigrade) and Class J fuses are to be used to protect the contactors.

5.5.5.8 Thyristors. In an adjustable voltage DC system electronic conversion unit, output voltage, and the voltage applied across the associated motor’s armature

terminals, is varied by changing the firing rate of the thyristors. The conversion unit is required to be in the three phase, full wave configuration. The output (DC) voltage is 135 percent of the input (AC) voltage.

Minimum protection for an electronic conversion unit is required to consist of a line isolation transformer, transient surge suppressors, and either current-limiting rectifier type fuses in each conductor of the AC line or static instantaneous overcurrent circuits with sensing in each conductor of the AC line. The controls are required to include an adjustable operating current limit capable of limiting maximum current to not more than 50 percent overcurrent into shorted conductors. The rectifier bridge is required to be rated, based on RMS values, for continuous duty at a minimum of 150 percent of the highest motor current rating that will provide full torque at all speeds, and for 300 percent of this motor current rating for one minute. The peak inverse voltage rating is required to be greater than 200 percent of the working peak inverse voltage. Thyristor case temperatures are required to be less than 212 degrees in an 86 degree ambient when delivering rated current. Parallel operation of thyristors is not permitted. The firing pulse for thyristors is required to have a rise time of less than 1 microsecond and a peak gate current of not less than one ampere for all devices rated above 35 amperes RMS. The maximum DC average voltage is required to be less than 500 volts. Controlled electric braking is required to be provided by feeding regenerated power back into the power source.

5.5.5.9 Rectifiers. In a rectifier, output voltage, and the voltage applied across its load’s terminals, is constant. The relationship between output (DC) and input (AC) voltage for various types of rectifiers is as follows: single phase, half wave, 0.45; single phase, full wave or bridge, 0.9; three phase, full wave, 1.35.

Minimum protection for the power diodes is required to consist of a line isolation transformer, transient surge suppressors, and either current-limiting rectifier type fuses or static instantaneous overcurrent tripping of the line circuit breaker. The rectifier bridge is required to be rated for continuous duty at a minimum of 150 percent of the load rating and for 1 minute at a minimum of 300 percent of the load rating. The peak inverse voltage rating relative to the working peak inverse voltage is required to be greater than 200 percent for avalanche type diodes and greater than 250 percent for other types. Diode case temperatures are required to be less than 212 degrees in an 86 degree ambient when the diodes are delivering rated load. When parallel operation of diodes is utilized, each diode’s actual share of the load is required to differ from its calculated share by less than 10 percent. Purposely matched diodes are not permitted to be used; current-equalizing devices are to be provided to force diodes to share current. The current on the legs of the bridge circuit is required to be balanced to within 5 percent. The DC average output voltage is required to be less than 500 Volts. Regenerated power is required to be automatically absorbed by resistors or other devices.

5.5.5.10 Resistors. Resistors are used to control the speed of series-wound DC motors and, in an electro-mechanical adjustable voltage DC system, shunt-wound DC motors. With a series-wound DC motor, the series resistors are selected to provide evenly spaced speed points. For hoist drives, it is required that resistances be selected so that the minimum movement of the master switch in the hoisting

direction will not allow a hook block or boom to lower under rated load. When shunt-wound DC motors are connected in parallel, as in the rotate drive on a portal or floating crane, resistance is required to be connected in series with each armature for load equalization.

NEMA utilizes Class Numbers to designate the current ratings of resistors. The Class 90 rating is the continuous rating of a resistor. Other Class Numbers used on industrial (non-Navy) cranes are 150, 160, and 170. The current rating of each of these other Class Numbers is based upon the resistor being “on” for 15 seconds and being “off” for 45 seconds, 30 seconds, and 15 seconds, respectively. NEMA Standards Publication No. ICS 9, Part 2 addresses resistors. It is NCC policy to require that the continuous rating of a resistor must equal or exceed the full load amperes of the associated motor. When armature shunting is used to limit the hoisting speed of a lightly loaded motor, armature shunt resistor selection is required to be verified for across-the-line current because it could initially draw an equivalent current during plugging. With a shunt-wound DC motor, the resistors in the generator’s field circuit are selected to provide evenly spaced speed points; for a hoist motor, the resistance in series with the generator field is different in each speed point for hoisting and lowering directions.

When a diesel engine is not equipped with electronic speed and fuel controls, a load bank is required to be used with the set to maintain a minimum loading on the diesel engine (typically 40 percent) to obtain complete combustion of the fuel. The output from the generator is sensed and when it falls below 40 percent, the load bank is energized. When the output exceeds 80 percent, the load bank is disconnected. Load banks are required to establish the maximum regenerative load level for diesel engine-generator sets. Load banks are sized based upon the maximum amount of regenerative power available from predetermined combinations of simultaneous deceleration of travel or rotate drives and lowering of a fully loaded hook hoist and/or the boom. Limiting regenerative power prevents overspeeding of the diesel engine due to “back-driving” by the generator. When regenerative power exceeding 50 percent of the diesel engine’s friction power rating is sensed, the load bank is connected across the generator to absorb the regenerative power. When regenerative power being sensed is less than 50 percent of that rating, the load bank is disconnected.

Resistors are required to be fabricated of stainless steel or other corrosion resistant metal; the use of “wirewound” type resistors is prohibited for segments of 8 ohms or less. Resistors are required to be mounted in substantial enclosures designed to permit the free flow of air sufficient to cool the resistors within their current rating by natural convection. When the resistor enclosure is mounted outdoors, it is required to be fabricated from stainless steel.

5.5.5.11 Eddy-Current Brakes. Eddy-current brakes are required to be rated to produce not less than the following percentages of rated hoist motor torque: 75 percent at 1/8 full speed; and 112.5 percent at 1/4 full speed.

5.5.5.12 Limit Switches. On bridge cranes, there are required to be two hoist upper limit switches. The first one is required to be an adjustable geared control circuit type limit switch. On a DC powered crane, the second one is required to be a block actuated power circuit type limit switch requiring resetting of the crane control circuit by a keyed bypass switch prior to resuming

operation. On a newer AC powered crane, the second one is required to be a block actuated control circuit type limit switch operating a line contactor located on the line side of the directional contactors or flux vector controller requiring resetting of the hoist control circuit by a keyed bypass switch prior to resuming operation. The keyswitch is required to be spring returned to normal. A geared control circuit type hoist lower limit switch is also required. The primary upper limit switch setting is required to preclude activation of the secondary upper limit switch at full speed and no load. Bridge and trolley limit switches may be required.

With the NCC limit switch arrangement on newer portal or floating cranes, luffing hoist limit switching is required to prevent raising the boom above the angle which puts the main hoist hook at its minimum operating radius, to prevent lowering the boom below the angle which puts the main hoist hook at its maximum operating radius unless the operator uses a key-operated bypass switch, to prevent lowering the boom beyond horizontal, and to bypass the main and other hook hoist upper limits with a horizontal boom whenever the boom is at or above the angle which puts the main hoist hook at its maximum operating radius. A boom-actuated limit switch is also required as an emergency back-up of the geared upper limit switch, by causing power interruption to the hoist motor through a means different from that used by the geared limit switch (for example, by opening a line contactor). The operator would have the capability to bypass this switch and lower (not lift) the boom with the emergency back-up switch tripped. Main hoist limit switching on newer portal and floating cranes is required to prevent raising the hook beyond its maximum elevation with the boom at the angle which puts the main hoist hook at its maximum operating radius, to prevent raising the hook beyond its maximum elevation with a horizontal boom unless automatically bypassed whenever the boom is at or above the angle which puts the main hoist hook at its maximum operating radius, and to prevent lowering the hook beyond its minimum elevation with boom at the angle which puts the main hoist hook at its minimum operating radius. An independent geared limit switch or a block-actuated limit switch is required to provide an upper limit as emergency back-up of the geared upper limit switch by causing power interruption to the hoist motor. Power interruption must be by means different from that used by the primary geared limit switch (for example, by opening a line contactor). The operator retains the capability to bypass this switch and lower (not lift) the hook with the emergency back-up switch tripped.

When a hook hoist’s wire ropes are routed parallel to the boom, there is minimal movement relative to the boom due to luffing of the boom. Therefore, there would be no need for a switch to establish an upper limit for the hook with the boom at the angle which puts the main hook at its maximum radius. The upper limit established with the boom in the horizontal position will provide an adequate high hook elevation at its maximum radius.

Other hook hoist’s limit switching is required to function in the same manner as the main hoist limit switching. When the boom is at the angle for the main hook hoist maximum operating radius, all hook hoists are required to be at their maximum operating radii coincidentally.

5.5.5.13 Pendent Pushbutton Stations. The pendent pushbutton station is required to be suspended from the crane by a small stainless steel wire rope strain lead which is required to be 1/8 inch (minimum). The pendent cable is required to be type SOO. Minimum conductor size is required to be No. 14 AWG. The pushbutton

station case is required to be heavy duty dust-and-oil-tight. The exterior of the pendent pushbutton station may be made of non-conductive material. Two-speed pushbuttons are required to need a distinctive difference in pressure for low and high speed positions. Pushbuttons are required to be so constructed that they cannot be caught in the control case. Pushbutton stations are required to have their elements legibly marked and arranged vertically in order from top to bottom: POWER ON, POWER OFF, HOIST-UP, HOIST-DOWN, BRIDGE-NORTH/EAST, BRIDGE-SOUTH/WEST, TROLLEY-EAST/NORTH, TROLLEY-WEST/SOUTH. Energization of the main line contactor is required to be controlled by the POWER OFF-POWER ON pushbutton. Additionally, there is required to be a white pilot light to indicate that power is available on the load side of the crane disconnect and a blue pilot light to indicate that the main contactor is energized. These lights are required to be located above the POWER ON and POWER OFF pushbuttons. On AC powered cranes, the white pilot light is required to utilize a separate, fused transformer for its energization. A switch which controls the floodlights is required to be mounted on the pendent pushbutton station in a location convenient for operation. Operating pushbuttons and pilot lights are required to meet the heavy duty requirements of NEMA Standards Publication No. ICS 2-216.

The pendent pushbutton station may be suspended from a festooned system similar to that for a bridge-to-trolley electrification system.

5.5.5.14 Cab Control Stations. Cab master switches, pushbuttons and lighted indicators may be console or armchair mounted. The operator’s chair is required to be adjustable forward and backward and to rotate as necessary to provide access and operator visibility of the load. Master switch operating handles are to be non-spring returned to OFF, and to have an OFF position detent. They often have an OPERATOR ATTENTIVENESS MONITORING (dead-man) switch. At least one dead-man switch must be continually hand activated in order to operate all crane motions. All master switch operating handles must be in the OFF position before any initial crane function can begin. Additionally, there is required to be a white pilot light to indicate that power is available on the load side of the crane disconnect and a blue pilot light to indicate that the main contactor is energized, a floodlight toggle switch, and a horn pushbutton. On AC powered cranes, the white pilot light is required to utilize a separate, fused transformer for its energization. Furthermore, on portal and floating cranes which are variably-rated at capacities less than their straight-line rating beyond a certain main hoist hook radius, it is required that there be a flashing yellow pilot light in the cab to indicate that the hook is beyond the maximum radius for its straight-line rating. There is required to be a black POWER ON pushbutton and a red mushroom head POWER OFF pushbutton. Energization of the main line contactor is required to be controlled by the POWER OFF-POWER ON pushbutton. The POWER ON pushbutton is required to be guarded to prevent accidental actuation. Operating pushbuttons and pilot lights are required to meet the heavy duty requirements of NEMA Standards Publication No. ICS 2-216.

5.5.5.15 Transformers. Transformers are selected to achieve the intended voltage change. Knowledge of the turns ratio between primary and secondary windings is required to be used to make this determination.

All AC control circuits are required to be fed from a single phase, air cooled, double wound transformer with a grounded metal screen between the primary and secondary windings of the transformer.

5.5.5.16 Protective Devices. Motor branch circuits are required to be protected in accordance with NEC Table 430-152. There are exceptions in NEC Section 430-52 which permit ratings or settings exceeding NEC Table 430-152's maximums so as to accommodate standard ratings of protective devices and motors which have excessive starting currents. Standard ratings for fuses and circuit breakers are listed in NEC Section 240-6. If a circuit breaker is used for this protection, it is required in NEC Section 610-42(a) to be an inverse time type; an instantaneous trip breaker is not acceptable. If an inverse time circuit breaker with adjustable settings is used to protect a motor branch circuit, the breaker is required to have a rating of at least 115 percent of the motor full load current; this is addressed in NEC Section 430-110. The maximum rating for an inverse time breaker is dealt with above; the code does not address the instantaneous trip setting of an inverse time breaker. The maximum rating or setting of protective devices is listed in NEC Table 430-152 as a percentage of motor full load current. Full load current is listed in NEC Tables 430-147 and 430-150 for DC and AC motors, respectively. Full load current is required to be used rather than the nameplate amperes of a specific motor so that the motor can be replaced with another motor, having the same horsepower rating, without necessitating the replacement of overcurrent protective devices; this is addressed in NEC Section 430-6. Although a crane motor is considered in NEC Section 610-43 to be protected from overload by a properly selected branch circuit overcurrent device, the use of overload relay(s) is required by NCC. Unlike other protective devices, motor nameplate amperes are used to select the heater element in overload relays. This is done for the protection of a specific motor and may necessitate the replacement of the heater elements if that motor is replaced with another motor. The overload relay is required to be selected to trip at no more than 150 percent of motor nameplate amperes.

Control circuit conductors are required to have overcurrent protection as addressed in NEC Section 610-53; however, they are considered protected by an overcurrent device having a rating not in excess of 300 percent of the conductors' ampacity.

Overcurrent protection of transformers is required as addressed in NEC Section 450-3(b). The primary of a transformer is required to be protected by an overcurrent device rated or set at no more than 125 percent of the rated primary current. If the secondary of a transformer is protected by an overcurrent device rated or set at no more than 125 percent of the rated secondary current, the primary overcurrent protection device can be rated or set at no more than 250 percent of the rated primary current. There are exceptions in NEC Section 450-3(b) and, for motor control circuit transformers, in NEC Section 430-72(c) regarding the rating or setting of overcurrent protective devices. These arrangements only provide protection for the transformer; required primary and secondary conductor protection may have to be provided by other devices. NEC Section 240-3(i) considers the secondary conductors of a single-phase transformer having a 2 wire (single voltage) secondary to be protected if the primary side of the transformer is protected in accordance with NEC Section 450-3(b) and the overcurrent protection device's rating does not exceed the value determined by multiplying the secondary conductor ampacity by the secondary to primary transformer voltage ratio.

On bridge cranes, the disconnecting means is required to be sized for simultaneous operation of bridge, trolley, and hoist drives.

5.5.5.17 Conductors. The selection of conductors, both for size and insulation type, is required to comply with the National Electrical Code (NEC). Aluminum conductors and connectors are not permitted to be used. All wiring is required to be numbered or tagged at connection points.

NEC Table 610-14(a) lists the short time ampacities for the different sizes with various types of insulations. The allowable 30- and 60-minute ratings are listed and the method for calculating the allowable 15 minute rating is prescribed. NEC Tables 310-16 and 310-18 list the allowable ampacities for continuous applications. The short time ampacities listed are required to be used for the selection of feeder, loop, or branch circuit conductors used with similarly short time rated motors and their brakes; control circuit conductors and conductors supplying ancillary equipment are required to be selected using the continuous ampacities.

Under certain circumstances the published rating of the conductors are required to be adjusted to be in compliance with the Code. Correction factors for the conductor's ambient temperature are incorporated into NEC Tables 310-16, 310-18, and 610-14(a). Application of one of these factors either increases or decreases the ampacity listed in the main body of the Table. The number of simultaneously energized or current carrying conductors in a conduit also affects the ampacity of the conductors in that conduit. Note 8 to NEC Tables 310-16 and 310-18 addresses the reduction of ampacity for conductors used in continuous applications. Notes printed below NEC Table 610-14(a) address the reduction of ampacity for conductors used in short time applications. Equipment grounding conductors and certain grounded conductors are not included in the calculations.

The recommendation of AISE, in their Standard No. 8, that the minimum conductor size for motor and brake circuits should be No. 8 AWG is to be followed for motors rated at 5 horsepower or higher. Conductors for motor branch circuits and feeders are required to be sized to have an ampacity not less than 150 percent of the motor's nameplate full load amperes. Additionally, voltage drop is required to be calculated and to not exceed 5 percent. A voltage drop of less than 5 percent from the supply to the drive motor and of less than 3 percent in either the feeders and mains or in the branch circuit will provide reasonably efficient operation. Voltage drop is required to be calculated using the following "rule of thumb" formula:

EQUATION $$VD = 10.37 \times I \times F \times L \times CM \qquad (16)$$

Where

VD = Voltage drop, in volts
I = Current, in Amperes
F = 2.0 (for DC circuits), 2.0 (for single phase or line-to-neutral AC (circuits), or 1.732 (for three phase AC circuits)
L = Conductor length in feet
CM = Conductor cross-sectional area, in circular mils.

This formula does not account for reactance in AC circuits; however, for conductors smaller than 3/0 AWG, reactance does not effectively contribute to conductance impedance. The conductivity factor, 10.37, is required to be corrected for an ambient temperature (t) other than 20 degrees (Celsius) by multiplying it by [1+0.00393(t-20)].

5.5.5.18 Raceways. For both rigid metal conduit and liquid-tight flexible metal conduits, fill is required to be limited to 40 percent of the cross-section of the conduit. The cross-sectional areas of conductors having various types of insulation are listed in Chapter 9 of the National Electrical Code. For a cable, either shielded and unshielded, or a conductor with stranding not included in NEC Chapter 9, run in conduit, its actual cross-sectional area is required to be used in the calculation of percentage of fill. The cross-sectional area of equipment grounding conductors is required to be included in the calculation.

5.5.5.19 Electrifications. Bridge crane runway and bridge-to-trolley electrification system conductors are required to be selected so as to be of the longest length without splices. Conductors are required to be fabricated from copper. Conductors are required to be sized for simultaneous operation of bridge, trolley, and hoist drives. The crane is required to be grounded through the runway electrification system.

A festooned type electrification system is required to use flat cables suspended from carriers riding on an I-beam; for conductors larger than #2 AWG, round cable is to be used. Conductors are required to be extra-flexible type with ethylene propylene rubber insulation in a neoprene jacketed flat cable. Type G or type W portable power cables are to be used for round cable applications. It is required that the cable loops do not extend low enough to come into contact with any obstructions. A voltage drop of less than 5 percent from the supply to the drive motor and of less than 3 percent in either the feeders and mains or in the branch circuit will provide reasonably efficient operation. Effectively minimizing the contribution of the voltage drop along the length of the electrification conductor to the overall voltage drop being considered is required to be a criterion in electrification conductor selection.

The rings in collector ring assemblies on portal and floating cranes are required to be fabricated from a copper alloy; silver plated rings are required to be utilized in communication circuits. Collector ring assemblies are required to be selected based upon their non-rotating, continuous duty current rating. Spare rings, two of each size and construction used, are required to be provided on new cranes; however, there are to be three spare collector ring assemblies of the largest size used.
A thermostatically controlled anti-condensation heater is required to be installed in the collector ring assembly enclosure. It is required to be selected to provide 7 watts per cubic foot. All heaters are required to be fed from a separate panel dedicated to equipment heater and battery charger circuits.

Redundant, full capacity, sintered copper-alloy/graphite collectors are required to be used with rigid conductor systems on bridge cranes and collector ring assemblies on portal and floating cranes.

5.5.5.20 Grounding/Bonding/Lightning Protection. An equipment grounding conductor in the form of a wire, sized in accordance with NEC Table 250-95, is required to be routed with all ungrounded conductors. Only one equipment grounding conductor needs to be run in each conduit. It would be the largest size required for any circuit routed in that conduit. Regardless of the type of equipment grounding conductor used elsewhere on a crane, an equipment grounding conductor in the form of a wire is required to be included in all bridge crane festooned conductor and cable reel

electrification systems; an equipment grounding conductor is required to be included as one of the conductors in rigid conductor systems.

A copper ring/collector assembly is required to be provided on newer cranes to ground each hoist drum. The ring is required to be electrically bonded to the drum. The collector is required to be stationary and connected to the equipment grounding conductor by means of a No. 8 AWG copper wire.

For lightning protection on portal, floating, and container cranes, bonding conductors are required to be provided across all gudgeons and the boom and strut hinge pins; the minimum size of these conductors is to be 2/0 AWG. Also, the upperworks of a portal or floating crane is required to be electrically bonded to the portal base utilizing 2/0 AWG conductors and a collector ring having a minimum cross-sectional area of 70 square millimeters.

On outdoor bridge cranes, the runway and bridge-to-trolley electrification system conductors serving as equipment grounding conductors are required to have a minimum cross-sectional area of 70 square millimeters.

5.5.5.21 Transients and Harmonics Protection. Transients protection for each adjustable frequency or flux vector controller is required to be provided, consisting of metal oxide varistors (MOVs) connected line-to-ground close to the line terminals of the controller. A monitoring circuit is required to be connected to indicate a blown MOV. The circuit is required to disable the control circuit of the affected drive.

With motors of 50 horsepower or greater, minimum harmonics protection for a flux vector controller is required to be provided, consisting of an isolation transformer and a detuned harmonic filter. The filter is required to consist of a capacitor bank connected in series with a reactor; they are required to be tuned to have a low impedance at a series resonance frequency between 270 and 290 Hertz. The filter is required to be connected across-the-line between the transformer and the controller.

Minimum harmonics protection for adjustable frequency controllers, and for flux vector controllers for motors smaller than 50 horsepower, is required to be provided, consisting of a reactor connected in series with the input of the controller.

5.5.5.22 Standing Wave Protection. For motor branch circuit conductor lengths exceeding 100 feet, reactors are required to be connected in series with the output of flux vector controllers and adjustable frequency controllers.

5.5.5.23 Lighting Fixtures. In mercury exclusion areas, fluorescent and high intensity discharge lamps (which contain elemental mercury) must be installed within sealed lenses or refractors which serve as a second means of containment for the mercury. Otherwise, incandescent lamps are required to be used to illuminate crane passageways and space while metal halide or tungsten halogen (quartz) lamps are required to be used in floodlights and spotlights.

On outdoor cranes, exterior footwalks are required to be illuminated to 5 footcandles. In the machinery houses on portal, floating, and container cranes,

40 footcandles is the required level of illumination at a workplane 3 feet above the floor. Also, the floor area beneath a bridge crane is required to be illuminated to 40 footcandles at a workplane 3 feet above the floor.

5.5.5.24 Radio Frequency Links. The installation of radio frequency (RF) links is recommended on outdoor cranes. Each link should be selected on the basis of its load rating and should have a 50-kilovolt rating. A gauge for verifying the original length of the link is to be procured with each link.

5.5.5.25 Radio Controls. Assure that the transmission range of the portable transmitter unit to be used with the radio controls is less than 650 feet. If more than one crane in the building is to be operated by radio controls, assure that there will be no interference between the systems. Only systems which operate on frequencies between 30 and 50 megahertz are to be installed. Ensure frequency allocations and assignments are obtained before a new system is installed.

5.5.5.26 Shore Power. Two types of connections on portal cranes for AC shore power, one sized to supply all of the ancillary loads on the crane and the other sized to provide sufficient power for full crane operation are required; similar connections for DC shore power are recommended if DC shore power is available.

Section 6: SUPPLEMENTARY REQUIREMENTS AND DESIGN CONSIDERATIONS

6.1 Supplementary Requirements. Cranes operating in non-routine environments or unique, dedicated service must include additional features and characteristics beyond those described in the preceding sections of this handbook. In many cases the prescribed crane classifications correspond to more severe commercial service than the actual operational environment of these cranes, but these classifications are warranted by the cranes' inherent higher level of reliability and robustness desired for critical applications.

6.2 Special Purpose Service. Cranes in "special purpose service" (SPS) support various lifting operations associated with the servicing of nuclear reactors and related components aboard vessels and in shore facilities. With the exception of the container cranes, all the main crane types described in Section 2 of this handbook are used in SPS lifting operations. The following design features are mandatory for all SPS cranes; any deviations must be approved by NCC:

a) OET cranes are required to be CMAA #70, Class D or higher. (Those with rated capacities of 10 tons or less, must also comply with the requirements of NAVSEA 0989-030-7000, Lifting Standard.)

b) Underrunning cranes are required to be CMAA #74, Class D; with patented track bridge girders per ANSI MH27.1. (Those with rated capacities of 10 tons or less, must also comply with the requirements of NAVSEA 0989-030-7000, Lifting Standard.) Crane runways for underrunning end trucks must also be patented track per ANSI MH 27.1.

c) Standard commercial hoist/trolley units are required to be ANSI/ASME HST-4M, Duty Class H-4 or H-5.

d) Overrunning end trucks are required to be welded plate box-sections (with diaphragms) between the wheel pockets. Web plates are required to incorporate welded blocks with machined seats (semi-circular notches) for wheel axle bearings. (Flanged cartridge bearing housings are not permitted.)

e) Trolley frames are required to incorporate wheel bearing seats, as described above.

f) Trolley structural members, in close proximity to the wire rope drum flanges and designed specifically for the anticipated loads in case of wire rope drum failure, are required to provide support for the wire rope drum in case of shaft failure. For hoist arrangements with a drum gear, the wire rope drum supports must also maintain drum gear tooth engagement with the drive pinion in case of shaft failure.

g) Boom main chords are required to be rolled (open) structural sections, so that the condition of all their surfaces may be monitored. Tubular (closed) structural sections are permitted only for the lacing members.

h) Wire rope design factor is required to be 6.0 or greater.

i) For custom designed (built-up) cranes, shaft fatigue design factor is required to be 2.0 or greater.

j) For custom design (built-up) hoists, the wire rope drum and sheave groove depths are required to be 0.438 and 1.150 times the wire rope diameter, respectively.

k) Custom designed (built-up) hoists with double reeving must use and equalizer bar (rather than an equalizer sheave) for balancing wire rope pulls.

l) Custom designed (built-up) hoists of OET, cantilever, gantry, and semi-gantry cranes are required to have two electro-mechanical hoist brakes, each with a minimum rating of 130 percent of the rated motor torque.

m) Cranes utilizing standard commercial (packaged) hoists or hoist/trolley units, are required to have two hoist brakes, each with a minimum rating of 130 percent of the rated motor torque. Both hoist brakes may be electro-mechanical, or one may be electro-mechanical and the other a mechanical load brake. (Either Weston or roller/incline types of mechanical load brakes are acceptable.)

n) Portal, floating, and other cranes with operator’s cabs on the same structure as the hoist, require two electro-mechanical brakes (shoe, disc, band, or caliper type) in the hoist drive even when a foot operated hydraulic hoist brake is present for speed modulation. (The shoe type electro-mechanical brake and the hydraulic brake may be integral or separate units.)

o) Hoists on all cranes that handle nuclear fuel, and on all bridge cranes with rated capacities of 10 tons or less, are required to have one of their two hoist brakes (or brake sets) act directly on the wire rope drum. Single or multiple caliper disc brakes are to be applied to one or two discs bolted or welded to the drum barrel. Band brakes are to be applied to the drum barrel.

p) All drive components of custom designed (built-up) hoists – those that transmit the driving torque, braking torque, and their supports/housings – are required to be steel. Exceptions are permitted for gear reducer housings and brake wheels and discs, which may be of ductile cast iron; and electric motor housings, which may be ductile cast iron or aluminum. These ductile cast iron and cast aluminum components must have a minimum elongation of 5 percent in 2.00 inches.

q) Standard commercial hoists and hoist/trolley units, whose use cannot be avoided because of site-specific constraints, must be selected to comply with the requirements of item (p), above, to the maximum practical extent. (It is considered practical to replace certain components and assemblies, such as wire ropes and load blocks, with their higher grade or custom designed steel counterparts.)

r) Components and assemblies of cantilever, gantry, and semi-gantry cranes that correspond to those described above, must comply with those requirements.

s) Cab operated cranes are required to be equipped with “deadman” controls; or alternatively, with a seat for a back-up operator.

t) Mobile cranes require no modifications from their standard commercial configuration other than a wire rope design factor of 6.0 or greater. (This requirement may be satisfied either by de-rating the crane or replacing the original wire rope with one of higher strength.)

u) An additional maintenance/condition requirement for mobile cranes which use hydraulic cylinders for boom elevation, is the limitation of the rate of leakage of the hydraulic fluid under load. (Such leakage reduces the initial stability of the crane because the hook load radius increases as the hydraulic cylinders allow the boom to drift lower.) The specific limits on such boom cylinder leak-down (usually on the order of 0.5 to 1.0 inch in 10 minutes under rated load) are established by the local crane engineering organization.

v) Trolleys and bridge end trucks of OET cranes (and other cranes with such overrunning components) must be analyzed for the applicable seismic forces and must be equipped with seismic restraints. Depending on the particular crane design and seismic zone, the restraints may be required against both lateral dislodgment and lift-off. The restraints may engage the rail head or the flange of the structural rail support member.

w) Portal cranes must be analyzed for the applicable seismic forces. Portal cranes that rotate on roller path and king pin assemblies, also require the king pin to be designed for the total shear load due to the horizontal seismic force.

x) All external structural welds of indoor cranes must be smooth (so that they will not tear a cotton cloth when scrubbed on them) to permit complete removal of any radioactive contamination that may have been accidentally released and deposited on them.

y) Cast steel poured sockets, in both outdoor and indoor installations, require minimum values of fracture toughness. Those cast of carbon steel, must have a minimum fracture toughness of 15 foot-pounds at 10 degrees Fahrenheit; those cast of alloy steel, 30 foot-pounds at 10 degrees Fahrenheit. The values of fracture toughness are to be determined by Charpy V-notch tests on sockets from the same lot.

6.2.1 Captivation and Containment. Cranes used to lift radioactive materials or major reactor components directly over open reactor compartments, must include provision to captivate or contain any fastener, item of hardware, fluid, or other material in such foreign material exclusion areas. The following design features, in addition to those listed above, apply:

a) All load blocks are required to include drip pans fitted around the shank of the hook and extending outwards to encompass all possible points of lubrication drips. Individual hoist components, such as gear reducers, are also required to be equipped with drip pans unless the trolley floor is designed to contain any lubricant drips from equipment that is mounted on it. Travel drives require drip pans or other containment provisions at all lubricated components or assemblies. (Permanently lubricated and sealed bearings are not considered drip-proof.) On portal, floating, and mobile cranes, only the outer section of the boom is required to be equipped with drip pans. (Outer section of the boom is defined as from the tip to 20 feet inward, measured horizontally from the main hoist sheave nest when the boom is at its maximum operating radius.)

b) All exposed fasteners and other items of hardware that may loosen or become dislodged, must be captivated by means of applied thread locking compound, installed lock wire, or attached chain. Items such as equipment nameplates and their fastening rivets must be removed or the rivets replaced with captivated threaded fasteners. On OET, underrunning, cantilever, gantry and semi-gantry cranes – the entire hoist, trolley, or hoist/trolley unit must be captivated. Additionally, bridge drives that pass over open reactor compartments, must also be captivated. On portal, floating, and mobile cranes, the outer section of the boom (as defined above) requires captivation. (Structural bolts tensioned or torqued in accordance with the structural design requirements do not require captivation. The practice of tack welding structural bolts or nuts is prohibited.)

c) Devices containing elemental mercury are prohibited, unless they provide double containment for the mercury. (HID and fluorescent lamps are among such prohibited devices, but may be used if the lamps are within sealed lenses or refractors, which serve as the second means of containment for the mercury.)

d) Devices containing fluids, including bumpers and components of hydraulic systems, are prohibited.

6.3 Hazardous/Explosive Environment. Cranes operating in hazardous environments require features which minimize the possibility of creating a spark by impact or by electric arcing. The extent of anti-sparking provisions is limited by the boundaries of the hazardous region, usually defined as a distance above the floor. In the majority of cases, the hazardous region encompasses only the hook blocks, wire ropes, and the pendent pushbutton station; in rare cases, the entire crane must be made low-sparking. Standard commercial varieties of electrical equipment are available to comply with the National Electrical Code requirements for all formally defined classes of hazardous environments, but there are no comparable criteria for the mechanical components. The material restrictions for hazardous environments given below are the traditional Navy Crane Center requirements for materials with low sparking potential (when struck) and with adequate mechanical (strength) properties as engineering materials.

6.3.1 Minimum Anti-Spark Protection. As minimum protection against creation of sparks by impact, the load hook is required to be either bronze (any alloy) or stainless steel (any alloy). In this application, cast hooks are acceptable; other mechanical properties should be approved by NCC. The pendent pushbutton station must be Type 7 for Class I, hazardous environment; and Type 9 for Class II, hazardous environment, as classified by NEC.

6.3.2 Additional Anti-Spark Protection. An additional degree of protection can be obtained with a bronze or stainless steel hook block or by covering the exposed surfaces of the hook block with thin bronze, stainless steel, or aluminum covers attached with similar fasteners. (Sheaves and other internal components are not required to be spark resistant.) To complement the hook block materials, stainless steel wire rope should be used.

6.3.3 Maximum Anti-Spark Protection. When the hazardous region envelops the entire crane, all electrical equipment on the trolley and bridge, and runway electrification require anti-sparking protection. Trolley and bridge travel wheels should be bronze, electric motors and disc brakes must be of the totally enclosed type (shoe brakes may not be used), all electrical enclosures must be Type 7 for

Class I, hazardous environment; and Type 9 for Class II, hazardous environment as classified by NEC. Trolley and runway electrification must be in the form of covered conductors, either festooned or reeled.

6.3.4 Background. The highest probability of spark creation is at the make/break contact surfaces of electrical equipment. These spark-producing sites localized and are isolated from the hazardous environment by standard approved designs of electrical enclosures. The possible sites of mechanical/impact spark creation on exposed surfaces are of a type that cannot be shielded by isolating enclosures, and there are no materials that are definitely non-sparking and have the required mechanical properties for crane applications. Only a limited number of practical materials with low-sparking characteristics are available for use on cranes.

Military specifications were developed for hand tools for “use in the presence of flammable gases, dust, and explosives” in the 1960’s. The term “nonsparking” was used in their titles and the phrase “low sparking hazard” in their text. These tools included such high impact items as scrapers, cold chisels, and hammers. The prescribed materials for these hand tools were heat-treatable copper-beryllium alloys 172 and 173. The acceptance test for confirming the low sparking property of the tool involved pressing the tool (or sample of tool material) against a knurled carbon steel wheel with a hardness of Rockwell C60 to 65 and rotating at 10,000 revolutions per minute. The test was conducted in a chamber with oxygen-enriched air mixture and evaporated gasoline. To be acceptable, the tool specimen subjected to this test was not to cause an explosion on three successive runs to be acceptable.

American Petroleum Institute funded a research project to be conducted at Underwriters’ Laboratories, Inc. under the sponsorship of the Committee on Accident Prevention and Fire Protection. The results of the project were presented in an API publication PSN 22114, Spark Ignition Properties of Hand Tools, October 1980. The conclusion:

“In the 24 years since the publication of Sparks from Hand Tools, nothing essentially new has been learned. Sparks produced by violent contact between some substances and others, including some of the metals ordinarily termed nonsparking can, in fact, produce ignition of gases or vapors if sufficient energy is dissipated in the impact. However, such conditions are far removed from the actual conditions in which hand tools are used. The fire records of more and more companies that have never used or have ceased to use the nonsparking tools amply confirm and support the position taken by the Safety Committee of the API Board of Directors in 1956:

The Institute’s position is that the use of special nonferrous hand tools, sometimes referred to as nonsparking tools, is not warranted as a fire prevention measure applicable to oil and gas operations.”

6.4 Hot (Molten) Metal Service. These cranes are popularly known as “hot metal cranes” but in Navy service they only handle ladles with molten lead or copper alloys. (Cranes that lift solid hot castings or forgings are classified as general purpose service cranes.) The most common cranes in this service are OET and underrunning types. The following design features apply to hot metal cranes:

a) OET cranes are required to be CMAA #70, Class E or F.

b) Underrunning cranes are required to be CMAA #74, Class D.

c) Standard commercial hoist/trolley units are required to be ANSI/ASME HST-4M, Duty Class H-4.

d) Operator's cab is required to be enclosed, air conditioned, and shielded underneath the floor. The shield must be effective in preventing injury to the operator from spill, splash, or radiant heat of the molten metal. A 1/4-inch steel plate, of the same shape as the floor and suspended 6 inches below it to provide a fully vented space, is considered acceptable for this purpose.

e) The pendent pushbutton station should be mounted on a messenger track or an outrigger away from the hook load.

f) Heavy sheet metal heat shields are required underneath the trolley or hoist/trolley unit, and below the load block.

g) The trolley frame of the hoist/trolley unit is required to include safety lugs that would limit its drop to 1.0 inch in case of failure of any component.

h) Structural and mechanical assemblies and components, whose bolts or other fasteners are subjected to tensile stress due to the hook load, must include some means to limit their drop (in case of failure) to 1.0 inch. (If the bolts or other fasteners are subjected to mainly shear stress, the drop-limiting feature is not required.)

i) Hoists are required to have two braking means; either in the form of two electro-mechanical holding brakes (each rated at 100 percent of the rated load hoisting torque), or one holding brake (rated at 150 percent of the rated motor torque) and a mechanical load brake or, in case of a hoist with a wound rotor motor, an eddy-current brake. The eddy-current brake is considered an acceptable braking means only if resistors (not saturable reactors) are utilized in the rotor circuit of the hoist motor. Disc brakes are acceptable, but they should be of the DC magnet, self-adjusting, type.

j) Wire rope must be selected to provide a minimum design factor of 8.0 and they must have an independent wire rope core. Dead end connections that are subjected to the full wire rope pull must be zinc speltered or swaged fittings that develop the breaking strength of the wire rope.

k) A hoist load limit switch, which activates audible and visual alarms, is required. The Belleville spring type is recommended.

l) Electric motors are required to have Class H insulation.

m) Electrical conductors are required to have high-heat insulation, selected from the types listed in NEC Table 610-14(a) for 125-degrees Centigrade temperature rating and derated for the appropriate ambient temperature.

n) Electrical enclosures are required to be NEMA Type 3 or 12.

o) Circuit breakers are required for hoist circuits; fuses for control circuits.

p) A horn is required to provide an audible warning whenever any travel drive is energized.

q) An epoxy paint is recommended for the hoist and trolley structural assemblies.

6.5 Ordnance/Explosives Handling. Cranes handling palletized or unpackaged ammunition, missiles, torpedoes, and other types of ordnance are required to incorporate the following design features:

a) OET cranes are required to be CMAA #70, Class D, or higher. Underrunning cranes CMAA #74, Class D or higher; with patented track bridge girders per ANSI MH 27.1.

b) Standard commercial hoist/trolley units are required to be ANSI/ASME HST-4M, Duty Class H-4.

c) For custom designed (built-up) hoists, shaft fatigue design factor is required to be 1.5 or greater.

d) Hoists on OET, underrunning, cantilever, gantry, and semi-gantry cranes are required to have two braking means; either in the form of two electro-mechanical holding brakes (each rated at 100 percent of the rated load hoisting torque), or one electro-mechanical holding brake (rated at 150 percent of the rated motor torque) and a mechanical load brake or, in case of a hoist with a wound rotor motor, an eddy-current brake. The eddy-current brake is considered an acceptable braking means only if resistors (not saturable reactors) are utilized in the rotor circuit of the hoist motor. Disc brakes are acceptable, but they should be of the DC self-adjusting type.

e) Portal, floating, container, and other cranes with the operator’s cabs on the same structure as the hoist may include a foot operated hydraulic hoist brake in addition to the two electro-mechanical brakes for speed modulation. Alternatively, instead of an independent hydraulic brake, one of the elctro-mechanical brakes may be equipped with an integral hydraulic system for over-riding the electrical release and applying the brake.

f) All drive components of custom designed (built-up) hoists-those that transmit the driving torque, braking torque, and their supports/housings – are required to be steel. Exceptions are permitted for gear reducer housing and brake wheels and discs, which may be ductile cast iron; and electric motor housings, which may be ductile cast iron or cast aluminum. These ductile cast iron and cast aluminum components must have a minimum elongation of 5 percent in 2.0 inches.

g) Standard commercial hoist and hoist/trolley units, when used because of site-specific constraints, must be selected to comply with the requirements of item (f), above, to the maximum practical extent. (It is considered practical to replace certain components and assemblies, such as wire ropes and load blocks, with their higher grade or custom designed counterparts.)

h) Cab operated cranes are required to be equipped with “deadman” controls; or alternatively, with a seat for a back-up operator.

i) Components and assemblies of cantilever, gantry, and semi-gantry cranes that correspond to those described above, must comply with those requirements.

j) Mobile cranes require no modification from their standard commercial configuration, except that wedge sockets are prohibited for ordnance/explosives handling. However, since they are variably rated and may need to be set on unprepared surfaces, local policies and procedures must be followed to ensure safe operation.

6.6 Longshoring Service. All variably rated cranes engaged in longshoring service (loading and off-loading ships) are required to be equipped with load-moment indicating devices (LMIs). (This requirement applies to each variably rated hoist on a crane, and to each hoist of straight-line rated cranes which is variably rated near its extreme reach.) The available choices of LMIs include those with a continuous visual display of the percentage of rated capacity for the lifted load at a particular radius as the load is maneuvered, a simple alarm (in the form of a light or buzzer) to warn the operator that the stability limit has been reached, or an automatic stop of the destabilizing outward or rotate motion. Hoists on straight-line rated cranes require only a load indicating device (LID) for longshoring service, since their operation is not restricted by the radius or rotational position of the load hook. As in the case of LMIs, there are several types of LIDs available. OSHA Regulation 1917.46, Load Indicating Devices, contains requirements for such devices in longshoring service.

LMIs and LIDs are not intended to weigh loads by lifting them; their function is only to verify the weight of the loads after the weights have been closely estimated by other means. Paragraph 4.5.29 provides a description of the available types of LMIs and LIDs. NCC policy is to require LMIs or LIDs, as appropriate, on all new cranes, including those that may at some future date be placed into longshoring service.

Cranes used in longshoring are required to be fitted with wind speed indicating devices. In addition to indicating speed, NCC requires that wind direction be indicated. The indicating device shall also alert the operator with a visible or audible warning to a high wind condition. The warning is to be given whenever the wind reaches the speed previously determined by the crane’s designer to require special operating procedures be followed. Operating instructions for high wind conditions are required to be permanently posted in the operator’s cab. If the wind speed reaches the crane’s shutdown speed, the crane is to be safely moved clear of the vessel and secured.

Section 7: TECHNICAL DOCUMENTATION

7.1 Purpose. The purpose and extent of technical documentation required by Navy Crane Center in its contracts is to ensure that the crane design is the product of competent designers and that adequate drawings and calculations are available for future needs to verify or re-evaluate design details, assess or repair damage, and facilitate alterations or improvements. Custom designed assemblies and components must be supported by detailed calculations and drawings; serially produced items must be adequately described by published commercial literature.

7.1.1 Design Responsibility. All portions of the crane design must be performed by, or under direct supervision of, a registered professional engineer (PE) competent in the particular engineering discipline. Alternatively, the completed crane design may be reviewed and approved by a PE who is the contractor's employee or a consultant retained by the crane contractor for that purpose. In either case, the PE must be intimately familiar with the crane contract specification and the details of the proposed crane design. Every drawing and set of calculations must be stamped and signed by a PE. The stamp and signature must be original, or otherwise comply with the rules or regulations pertaining to their reproduction in the state of the PE's registration.

PE licensing must be by a board or agency authorized to license and register professional engineers in any state of the U.S. or province of Canada.

7.1.2 Scope. The crane design calculations must, as a minimum, include analyses for each identified load combination and operating condition or configuration. The selection of standard, serially produced, components and assemblies must be supported by their manufacturers' selection procedures. All material must be fully identified – including their condition, mechanical properties, and allowable stress levels. Calculations must demonstrate that the calculated stresses do not exceed the allowable values. Similarly, selection of standard purchased assemblies and components, following the published methods of selection or sizing, must demonstrate their adequacy for the imposed loadings. The standard purchased items must be fully identified by manufacturer and part number; and any additional information, such as material or test results, must also be provided. Additionally – all alignment, torquing, and other assembly procedures must be clearly specified on the drawings.

Drawings and calculations should be organized in a logical manner – by engineering discipline and level of detail. The technical documentation should include drawings for assembly/disassembly of the crane or major components, lubrication, and jacking arrangements.

Selection of critical items, such as rotate bearings, must include the manufacturer's certification of proper selection for the intended service and the identified load cases. Diesel engine-generator sets must be accompanied by a torsional vibration analysis and certification that the set is free of critical torsional frequencies in the normal operating speed range. Other items which are required to comply with national, state, or local regulations (for example, compressed air storage tanks) must be provided with appropriate certifications.

7.2 Floating Cranes. Technical documentation for the crane, including the rotate bearing and its lower structural support, must be as described above. The barge design, including the tub, must be reviewed and approved by the American Bureau of Shipping (ABS). The floating crane contractor is required to make arrangements with ABS for that purpose and provide the required technical documentation. ABS review would consider the presence and effect of the crane in the specified configurations.

ABS maintains authorized inspectors in the major U.S. ship building areas and many foreign locations. These ABS inspectors provide on-site surveillance and enforce the prescribed quality standards during the construction of the vessels.

Other technical data that requires ABS review and approval includes the trim and stability booklet, steel certificates, welding procedures, list of ABS qualified welders and their certificates, and weld inspection and testing documentation. Following review and approval of barge design, the contractor must obtain from ABS a class certificate confirming that the barge was manufactured and classed as a Maltese Cross A1 barge, International load Line certificate, and a Fitness To Proceed Under Tow certificate (confirming approval of the towing plan).

7.3 Commercial Cranes. Standard commercial cranes and line hauling mechanisms should be accepted with the standard documentation, in the form of operational and maintenance manuals, customarily provided with the equipment. Mobile and pedestal cranes warrant further elaboration. See paragraph 7.7, below.

7.3.1 Mobile Cranes. In the case of mobile cranes, the critical documentation is the load charts, which establish the operating envelope for the crane in its various configurations. The lifting capacities (load-radius combinations) are governed by the stability and strength limits of the crane, which is the product of a such key inputs as the boom length (and weight), reeving, rotate position, and site conditions. It is important to note that the weight of the load block (and on some models or configurations the wire rope) is considered part of the load.

7.3.2 Pedestal Cranes. Pedestal cranes should be procured from manufacturers authorized by American Petroleum Institute to use the API monogram, which is a registered trademark, and attests that the design and quality standards of API have been met. Additional documentation required for these cranes is in the form of load ratings. These cranes are variably rated for static and dynamic conditions. Static ratings apply when there is no relative motion between the crane and the load to be lifted; dynamic ratings apply when there is specific relative motion between them. As with the mobile crane ratings, the load block is considered part of the load.

7.4 Computer Analyses. Computer analyses are preferable to hand calculations, especially for the design and evaluation of complex structural assemblies. NCC policy is to accept computer-generated analyses provided that the program is proven and generally recognized by the industry, and that the presentation is properly tailored and its application is fully explained. As minimum requirements for acceptability, the computer analyses must:

a) Provide program title (and version), concise description, methodology, and assumptions.

b) Fully and clearly define all inputs.

c) Identify all load cases and load combinations, and match them to the specification requirements.

d) Use the same input of coordinates for the analytical model and the structural assembly.

e) Fully and clearly define all outputs.

f) Mark all pertinent or design-governing data items (such as loads, locations, positions, stresses, etc.) and the corresponding computed values. The marking of the data items must facilitate easy location and identification of the structural members on the assembly drawings.

g) Reference the printout page number of each data item extracted from the printout and used in the design hand calculations.

h) Show that all estimated computer program input values are not more than 3 percent on the unconservative side.

7.5 Catalog Cuts. The selection of standard commercial assemblies and components must be accompanied by manufacturers' technical literature (catalog cuts). Each catalog cut must be marked-up to fully identify the model or size/rating of the item and supplemental pages with data or information to demonstrate specification compliance. Catalog cuts which show modifications beyond the standard options and all supplemental pages must bear original signatures and dates of the manufacturer's authorized representative or the responsible PE. Each catalog cut and supplemental page must identify the crane, drive, and component to which it applies.

Normally catalog cuts are appropriate for packaged hoists, spreaders, monorail beams, standard end trucks, gear reducers, brakes, electric motors, runway electrification, master switches, pushbutton control stations, drive control equipment, and major hydraulic components. Catalog cuts for widely used mechanical and electrical components may be omitted.

7.6 Certifications. Certifications are required for certain items and procedures to confirm specification compliance and quality levels of workmanship. Each certification must bear the original signature and date of the appropriate responsible individual. Certifications are usually required for the following, where they apply, but additional certifications may be required in particular cases:

a) Welders and automatic welding machine operators for qualification with the requirements of AWS D1.1 or D14.1, as appropriate to the crane type and the weld types.

b) Weld inspectors for non-destructive examination of welds according to American Society of Non-Destructive Testing ASNT TC-1A.

c) High-strength bolts and nuts to verify U.S. manufacture (with positive traceability) and rotational capacity test data for each production lot and bolt-nut combinations.

d) Surface preparation and painting to confirm that the surfaces to be painted were properly blast-cleaned and the paint coats were applied in accordance with the paint manufacturer's recommendations.

e) Wire rope breaking strength and positive traceability to the manufacturer.

f) Shaft and coupling alignment readings to demonstrate compliance with the coupling manufacturer's alignment recommendations. The certification must include the identification and location of the coupling, the method of alignment, manufacturer's recommendations, and the actual alignment (both offset and angular) that was obtained.

g) Adequacy of rotate bearing and installation, to confirm the bearing manufacturer's approval of the selection, rigidity and accuracy of the mounting structure, and tensioning of the fasteners.

h) Hydraulic fluid cleanliness of the hydraulic system to confirm that initial condition complies with the specification criteria.

i) Torsional vibration analysis to confirm that the diesel engine-generator set is free of damaging torsional frequencies in the normal operating speed range.

j) Diesel engine emissions authorization/approval documents to confirm compliance with the local air quality regulations for the crane as a new emissions source.

k) Air storage tank inspection and pressure test results and distribution to the appropriate local authority to verify compliance with the ANSI/ASME Boiler and Pressure Vessel code. (A copy of the certificate must be attached to the tank.)

l) Approval of periodic overload testing (up to 130 percent of rated capacity) without detrimental effects on the equipment and continued validity of the manufacturer's warranty.

7.7 Technical Manuals. All cranes must be accompanied by a technical manual. Technical manuals for custom designed cranes are normally comprised of operating instructions, assembly and sub-assembly drawings (which are extracted from its technical documentation drawing set), and catalog cuts of standard commercial items with the manufacturers' literature for maintenance, adjustment, inspection, troubleshooting, and repair instructions. Manufacturers' literature usually includes identification of all parts and a listing of authorized service centers.

Technical manuals for standard commercial cranes limit their contents to the safe operation and maintenance instructions. Normally they do not permit/approve any significant repairs due to liability concerns. Damaged or malfunctioning components must be returned to the manufacturer for repairs, and only the manufacturer's replacement parts may be used in place of obsolete parts. Such technical manuals are normally the only available documentation for equipment.

7.8 Crane Alterations. Crane alterations, non-compliances with current requirements, and discovered variances from the design drawings of any kind must be properly documented. Those that involve load bearing and load controlling parts, and safety devices or circuits, require NCC approval; others may be approved locally by the responsible engineer, with an information copy to the NCC. The entire crane alteration documentation process is fully explained in NAVFAC publication P-307, Management of Weight Handling Equipment, and is mandatory for all Navy activities.

Section 8: FOREIGN DESIGN STANDARDS AND PRODUCTS

8.1 Foreign Design Standards. Navy Crane Center (NCC) policy is to accept foreign design standards and engineering practices of the major industrial countries, provided they are accompanied by satisfactory explanation and are correlated with corresponding U.S. standards and practices. The successful worldwide marketing and use of the standard products of such foreign countries provides hard evidence of their sound design workmanship. In general, the quality of engineering and design factors are consistent with those of U.S. industry. It is also prudent to permit foreign designers and manufacturers to follow their established practices and techniques, in which they are skilled, rather then force them to work to unfamiliar requirements. It must also be noted that some crane types and components are available only from foreign sources.

8.1.1 Federation Europeenne De La Manutention. Section I, Heavy Lifting Equipment, of Federation Europeenne De La Manutention (F.E.M./I), Rules for the Design of Hoisting Appliances, is the European standard applicable to the design of all main crane types described in this handbook, except the mobile cranes. It was first published in 1962 and has been widely used in many countries. It requires the procuring activity to specify the “class of utilization” for the structural design and the “state of loading” for each mechanism or drive. Application of this standard to the design of any crane must be approved by NCC.

8.2 Translation and Engineering Units. All design calculations and drawings that use foreign language and nomenclature must include corresponding English equivalents. Metric units may be used for both calculations and shop drawings, but they must include conversions to English units; in the case of calculations, only the initial inputs and final results need to be so converted.

8.3 Professional Credentials. Professional training and accreditation of foreign engineers may vary in some aspects from those in the U.S., but they are comparable and entirely satisfactory for the design work in which they engage. NCC reviews academic records and experience resumes and approves assignments of key design engineers for Navy crane projects to ensure competent execution of the design.

8.4 Materials. Mechanical properties and quality standards of common construction materials of foreign sources closely resemble those of ASTM and other U.S. standards. NCC reviews and approves all material specifications of foreign sources for use on Navy crane projects.

8.4.1 Commercial Grade Dedication. This term is used to identify items of segregated material obtained under a standard or specification (“commercial grade”) which does not provide the overall quality of material required by the crane specification, but from which individual items are selected by inspection and testing, that are proved to possess the required properties and characteristics. The inspection, testing, and segregating of such materials are normally performed by the distributor/supplier to the crane manufacturer; however, they may also be performed by the crane manufacturer. In either case, accurate documentation and strict inventory control are mandatory. Commercial grade dedication is most applicable to structural steel and shafting, but may be accepted for other products.

8.5 Welding. Welding procedures, materials, standards, and welder qualifications are comparable to those of AWS. NCC requires all the necessary certifications and other data for review and approval prior to start of work. In some foreign countries U.S. government inspectors are available to monitor the adherence to approved procedures and quality of workmanship and testing. American Bureau of Shipping inspectors are also stationed in the major ship building centers of some countries and may be commissioned to provide their services on Navy crane projects.

8.6 Wire Ropes. Federal Specification RR-W-410 and Wire Rope Users Manual contain a wide selection of wire rope constructions and sizes, and these are the preferred choices for the majority of crane applications. There are non-routine applications, however, that require specialty foreign designs for optimum operation and service life. Examples of such specialty wire ropes are those designed specifically for non-rotating characteristics, multi-layer spooling, and resistance to abrasion and mechanical damage. The unique construction and metric sizes of such ropes do not comply with those of RR-W-410 or Wire Rope Users Manual. Such wire ropes may be used on Navy cranes, subject to NCC review and approval of the specific applications.

It is common U.S. industry practice to groove sheaves for two wire rope diameters. In selecting metric wire ropes for installation on new cranes with such sheaves, the metric diameter must be within the limits of the wire ropes for which the sheave is grooved. When the wire rope is to be installed on an older crane (with sheave and hoist drum grooves configured for a specific U.S. produced wire rope type) the sheave and hoist drum grooving must be considered to ensure a satisfactory match with the wire rope, and NCC approval must be obtained.

8.7 Specialty Components. Some key components of cranes are produced only in foreign countries or by U.S. subsidiaries of foreign countries in conformance with foreign standards. The capacities or ratings of such components, and their installation requirements, are converted to the English engineering units and verified for specification compliance.

8.7.1 Common Components. Other foreign-manufactured standard mechanical and electrical components, even though they have U.S. equivalents, may also be used on Navy cranes. Their selection and sizing must be supported by engineering calculations and other appropriate documentation, in the same manner as the specialty components.

8.8 Exceptions. There are certain prohibitions on the use of components from foreign sources. Such prohibitions are due to practical considerations – either susceptibility to counterfeiting or maintenance and timely support.

8.8.1 High-Strength Structural Bolts and Nuts. Structural bolts are critical to the safety and integrity of the structures of all sorts, but are subject to counterfeiting and misidentification. NCC policy is to prohibit the use of high-strength structural bolts from foreign manufacturers.

8.8.2 Electrical Controls. Sophisticated electronic crane controls require expert technical support on short notice. The normal level of troubleshooting, maintenance, and repair that is presented in the technical manuals may not be adequate in some cases. Dependable expert technical support from the control manufacturer must be available on short notice. To that end, NCC policy is to prohibit electronic controls of foreign manufacturers.

Section 9: CRANE INFORMATION FORMS

9.1 Main Crane Types. Appendices A, B, and C are sample Crane Information Forms for the most frequently procured crane types for Navy activities. The appropriate form must be completed by the customer activity prior to the preparation of the crane procurement specification by The Navy Crane Center.

Appendix A – All limiting dimensions, clearances, access platforms, and interference's with load hooks in their operating envelope (such as the diagonal runway column brace in Sketch A-4) that affect crane design, must be shown on the sketches. For design of new buildings, typical crane dimensions and required clearances may be obtained from the Whiting Crane Handbook.

Appendix B – For underrunning cranes, the existing runway or the building support structure and anchor points for a new runway, must be shown in detail. Since underrunning cranes are primarily standard commercial products, manufacturers' catalogs should be reviewed to ascertain various configurations, dimensions, and the required clearances.

Appendix C – It is desirable to have the portal cranes delivered nearly fully assembled on a barge. Consequently, the off-loading location on the waterfront must be identified and fully described. Alternatively, if extensive assembly/erection at the site is envisioned, that area must be clearly marked. Sketch C-1 is intended for that purpose. Additionally, clearance envelopes at the level of travel trucks and above must be outlined. The curves in the rail system layout must be accurately defined in order to establish the required travel truck float.

9.1.1 Other Crane Types. Similar forms and sketches must be prepared by the customer activity for other crane types, using the sample forms as a guide for the appropriate information and level of detail, to procure a crane design suitable for the operational requirements and fully adapted to the site conditions.

APPENDIX A

Sample Crane Information Form for
Overhead Electric Traveling Crane(s)

Date_____

1. PROJECT INITIATION LETTER _____

2. REQUIREMENT VALIDATED BY _____
Name Signature

3. USING ACTIVITY _____

_____

4. BUILDING INFORMATION:

a) Building name (and number) _____

b) Room or area of crane location _____

5. NUMBER OF IDENTICAL CRANES REQUIRED _____
(If cranes are not identical, prepare a separate form for each crane)

6. RATED CAPACITY:

a) Main/auxiliary hoist _____ tons (short)

b) Bridge _____ tons (short)

7. CRANE DESIGN:

a) CMAA #70 Class _____ or

Approximate main hoist lifts per 8-hour shift:

Number of rated capacity lifts _____
Number of 75% rated capacity lifts _____
Number of 50% rated capacity lifts _____
Number of 25% rated capacity lifts _____

b) Desired speed ranges: high/low (feet per minute)

Main hoist _____/_____
Auxiliary hoist _____/_____
Trolley _____/_____
Bridge _____/_____

8. CRANE SERVICE: (Check and fill-in appropriate items.)

a) General Purpose Service (GPS): Yes_____ No_____
(If “no”, see Section 6.)

b) Special Purpose Service (SPS): Yes_____

Captivation and containment required? Yes_____ No_____

c) Hazardous/Explosive Environment: Yes_____

Spark protection required: Minimum_____Additional_____Maximum_____

NEC Class_____ Division_____ Group_____

Height above floor that protection is required: _____

d) Hot (Molten) Metal Service: Yes_____

e) Ordnance/Explosives Handling: Yes_____

f) Brief explanation of the operating procedure: _____

_____

_____

9. OPERATOR CONTROLS: (Specify)

a) Cab _____ (On bridge _____ On trolley _____)

b) Floor/Pendent (On trolley _____ On messenger track _____)
(Fixed _____ Retractable _____)

c) Portable (Radio _____ Infrared _____)

d) Wall _____

e) Lockable _____

f) Other (Explain)_____

10. ELECTRICAL CONTROL SYSTEM: (Specify in detail)

AC variable frequency or fixed speed point;
DC load-sensitive or fixed speed points;
Number of speed points; speed points cutouts –

Main hoist _____

Auxiliary hoist _____

Trolley _____

Bridge _____

11. OPERATING ENVIRONMENT:

a) Indoor _____ Outdoor _____ Both _____

b) Ambient temperatures (High_____ Low_____)

c) Environment classification:

Non-hazardous _____ Dusty _____ Sand blast _____

Corrosive _____

If corrosive, specify the nature of fumes or vapors _____

_____

12. OPERATOR'S CAB:

a) Open _____ Fan _____

b) Enclosed (Heated _____ Air Conditioned _____ Fan _____)

c) Lockable _____

d) Access (from the crane _____ from the building _____)

13. RUNWAY END STOPS:

a) Existing _____ New (to be provided) _____
(If existing, show on sketches)

b) Is there another crane on the runway? _____
(If existing, show location of the electrical junction box and provide description of bumpers or striker plates)

14. RUNWAY ELECTRIFICATION:

a) Existing _____ New (to be provided) _____
(If existing, show location on sketches and provide description, rating, and manufacturer's name.)
(If new, show location of the electrical junction box and provide circuit size.)

15. SPECIAL REQUIREMENTS:

a) Are floodlights required under the bridge girders?_____

b) Are drip pans required under any components?_____

c) Is any special paint required? _____

d) Is fungus resistance treatment required for any electrical components?
_____

e) Is radio interference suppression required? _____Class_____

f) Will the crane pass through doors?_____

g) Are anti-collision interlocks required?_____

h) Are there any other conditions or operational requirements that should be considered in the design and fabrication of the crane(s)?

_____

_____

_____

_____

Provide sketches and complete description for all of the above features that apply. Add any other features or requirements that may be appropriate.

16. INSTRUCTIONS FOR CLEARANCE SKETCH AND FLOOR PLAN:

a) The “C” dimension is measured from the top of the rail to the lowest overhead obstruction (bottom chord of truss, light fixtures, beams, knee braces, ducts, pipes, conduits, etc.)

b) Loads “K” and “P” are the wheel loads (without impact), and dimensions “L”, “M”, “N”, and “Q” are the spacings that were used for the design of the runway girders.

c) If the particular runway girder is of a different construction than shown on the clearance sketch, provide a new sketch showing the appropriate details of the girder.

d) Show the cardinal compass directions.

e) Show the required load hook approaches, of both hoists, at each end of runway and ends of the crane bridge.

f) Show access platform(s) to the crane.

g) Show runway girder support columns and spacing.

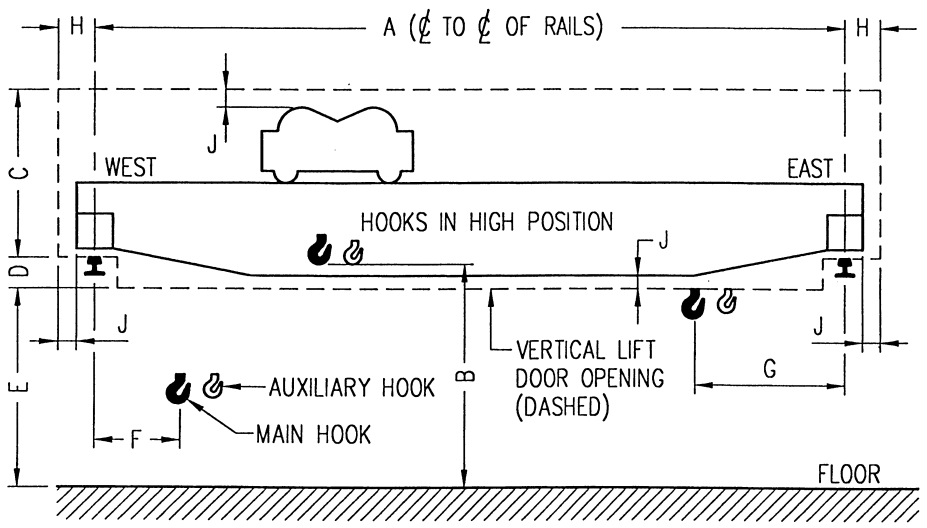

A 78'-7 5/8"	F 4'-6"	L 5'-3"
B 38'-0" (MIN)	G 8'-0"	M 5'-0"
C 9'-8"	H 1'-0"	N 3'-0"
D 4'-0"	J 0'-3" (MIN)	P 82.2 KIPS
E 36'-10"	K 51.2 KIPS	Q 17'-0"

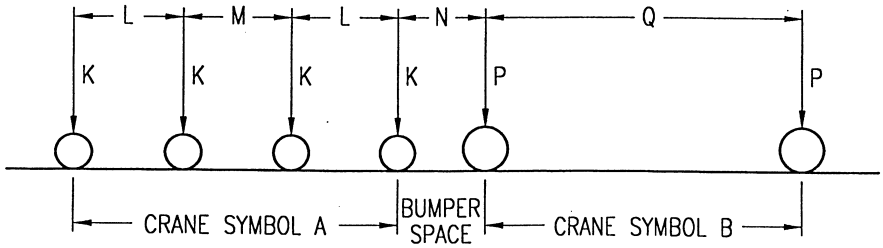

K AND P ARE THE WHEEL LOADS USED FOR DESIGN OF RUNWAY GIRDERS, EXCLUDING IMPACT, SPACED AS INDICATED.

SKETCH NO. 1

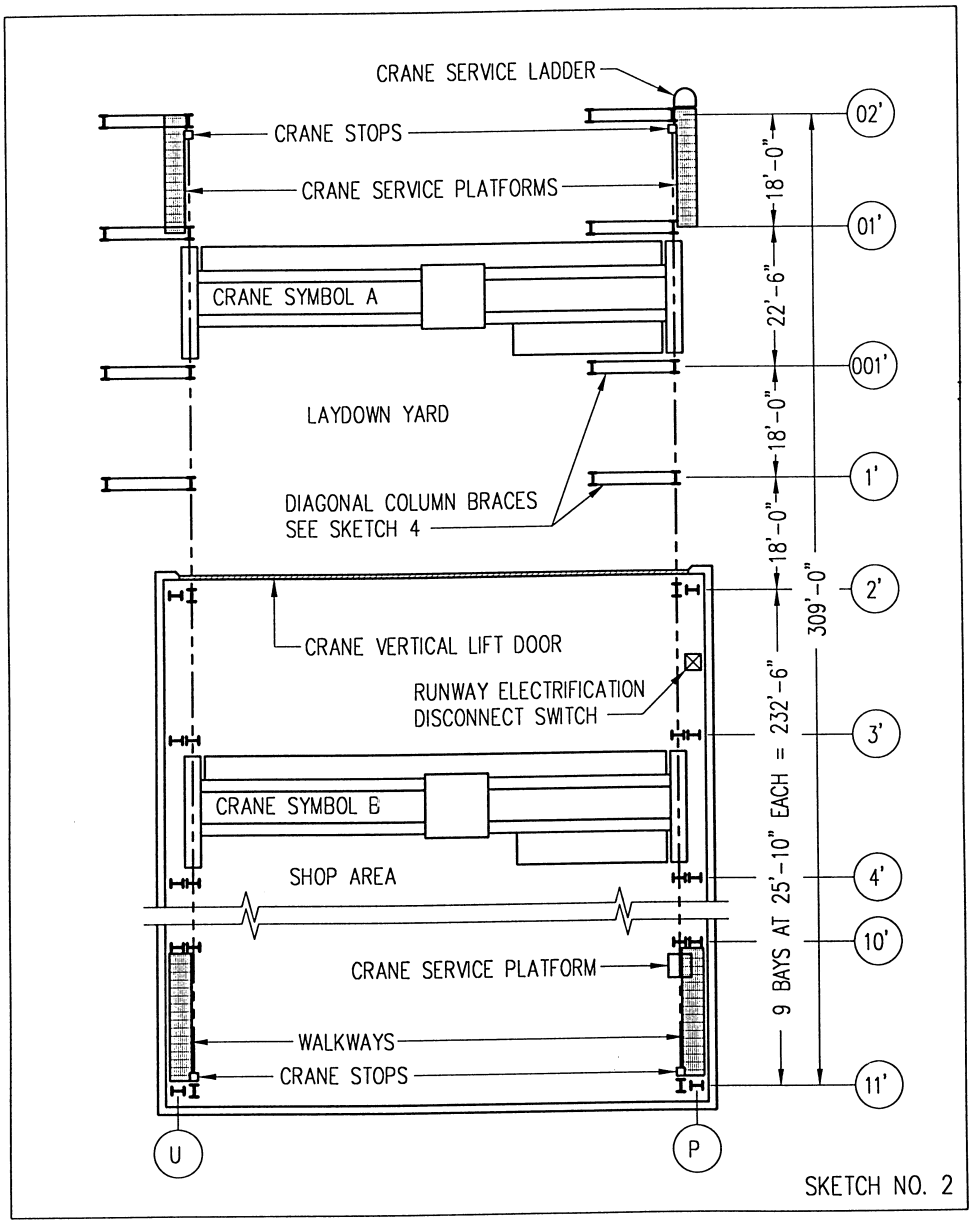
CRANE SERVICE LADDER
CRANE STOPS
CRANE SERVICE PLATFORMS
CRANE SYMBOL A
LAYDOWN YARD
DIAGONAL COLUMN BRACES
SEE SKETCH 4
CRANE VERTICAL LIFT DOOR
RUNWAY ELECTRIFICATION
DISCONNECT SWITCH
CRANE SYMBOL B
SHOP AREA
CRANE SERVICE PLATFORM
WALKWAYS
CRANE STOPS
02'
01'
001'
1'
2'
3'
4'
10'
11'
U
P
18'-0"
22'-6"
18'-0"
18'-0"
309'-0"
9 BAYS AT 25'-10" EACH = 232'-6"
SKETCH NO. 2

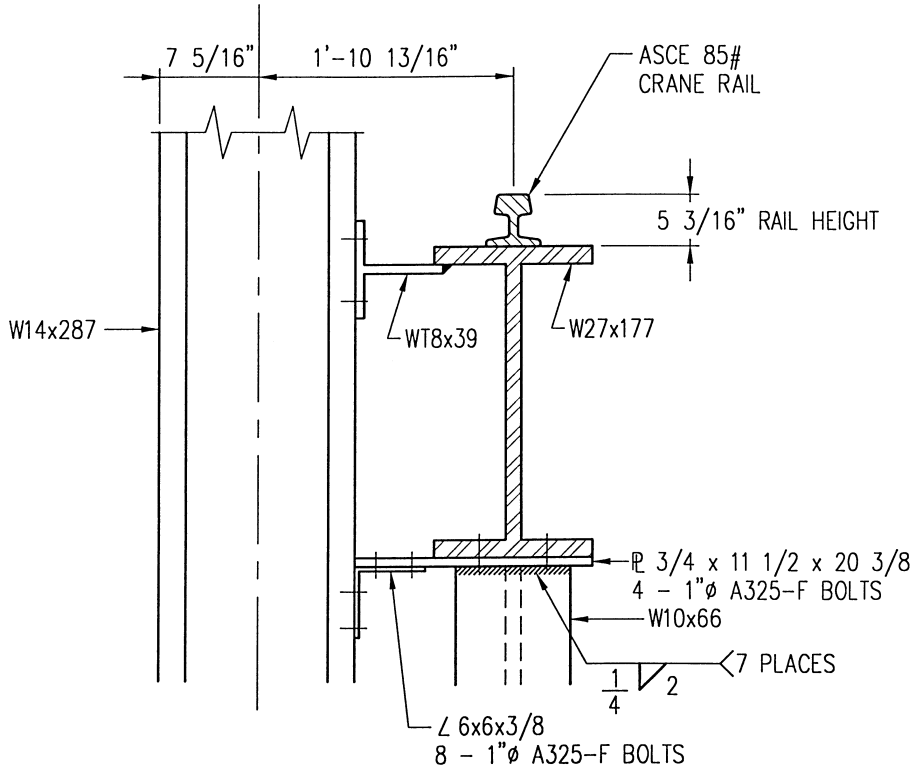

INTERIOR CRANE RUNWAY SECTION (TYP)

SKETCH NO. 3

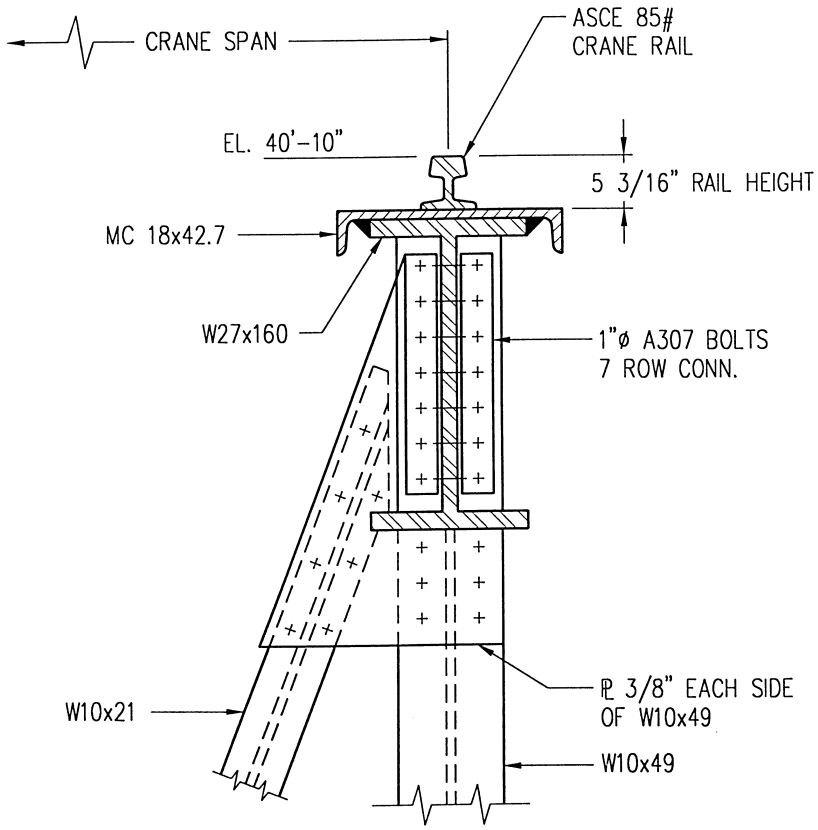

COLUMN AND BRACING IN LAYDOWN AREA (TYP)

SKETCH NO. 4

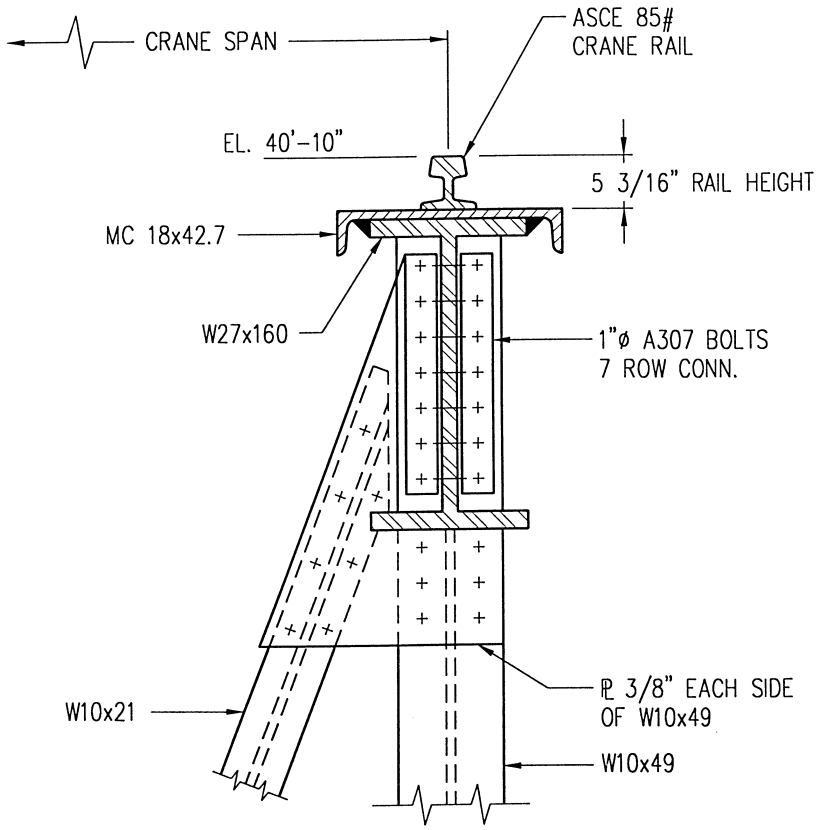

COLUMN AND BRACING IN LAYDOWN AREA (TYP)

SKETCH NO. 4

APPENDIX B

Sample Crane Information Form for
Underrunning (Single Girder) Crane(s)

Date_____

1. PROJECT INITIATION LETTER _____

2. REQUIREMENT VALIDATED BY _____
Name Signature

3. USING ACTIVITY _____

_____

_____

4. BUILDING INFORMATION:

a) Building name (and number) _____

b) Room or area of crane location _____

5. NUMBER OF IDENTICAL CRANES REQUIRED _____
(If cranes are not identical, prepare a separate form for each crane)

6. RATED CAPACITY:

a) Hoist/trolley unit _____ tons (short)

b) Bridge _____ tons (short)

7. CRANE DESIGN:

a) CMAA #74 Class _____ bridge structure

b) ANSI MH27.1 Class _____ bridge structure

c) ANSI/ASME HST-4M Duty Class _____ hoist/trolley unit

Or

Approximate main hoist lifts per 8-hour shift:

Number of rated capacity lifts _____
Number of 75 percent rated capacity lifts _____
Number of 50 percent rated capacity lifts _____
Number of 25 percent rated capacity lifts _____

b) Desired speed ranges: high/low (feet per minute)

Hoist _____

Trolley _____

Bridge _____

8. CRANE SERVICE: (Check and fill-in appropriate items.)

a) General Purpose Service (GPS): Yes_____ No_____
(If "no", see Section 6)

b) Special Purpose Service (SPS): Yes_____

Captivation and containment required? Yes_____ No_____

c) Hazardous/Explosive Environment: Yes_____

Spark protection required: Minimum_____Additional_____Maximum_____

NEC Class _____ Division _____ Group _____

Height above floor that protection is required: _____

d) Hot (Molten) Metal Service: Yes_____

e) Ordnance/Explosives Handling: Yes_____

f) Brief explanation of the operating procedure: _____

_____

_____

9. OPERATOR CONTROLS: (Specify)

a) Floor/Pendent (On trolley _____ On messenger track _____)

b) Portable (Radio _____ Infrared _____)

c) Wall _____

d) Lockable _____

e) Other (Explain) _____

10. ELECTRICAL CONTROL SYSTEM: (Specify in Detail)

AC variable frequency or fixed speed point; DC load-sensitive or fixed speed points; number of speed points; speed point cutouts

Hoist _____
Trolley _____
Bridge _____

11. OPERATING ENVIRONMENT:

a) Indoor _____ Outdoor _____ Both _____

b) Ambient temperatures (High _____ Low _____)

c) Environment classification:

Non-hazardous _____ Dusty _____ Sand blast _____

Corrosive _____

If corrosive, specify: the nature of fumes or vapors_____

_____

12. RUNWAY END STOPS:

a) Existing _____ New (to be provided) _____
(If existing, show on sketches)

b) Is there another crane on the runway? _____
(If existing, show location on sketches and provide description of bumpers or striker plates)

13. RUNWAY ELECTRIFICATION:

a) Existing _____ New (to be provided) _____
(If existing, show location on sketches and provide description, rating, and manufacturer's name)

(If new, show location of the electrical junction box and provide circuit size.)

14. SPECIAL REQUIREMENTS:

a) Are drip pans required under any components?_____

b) Is any special paint required?_____

c) Is fungus resistance treatment required for any electrical components? _____

d) Is radio interference suppression required? _____Class_____

e) Will the crane pass through doors?_____

f) Will the crane cross over to another runway?_____

g) Will the hoist/trolley unit cross over to another crane bridge?_____

h) Are the cross-over interlocks to be manual or electrically operated?_____

i) Are anti-collision interlocks required?_____

j) Are there any other conditions or operational requirements that should be considered in the design and fabrication of the crane(s)?_____
_____
_____

15. INSTRUCTIONS FOR CLEARANCE SKETCH AND FLOOR PLAN:

a) For a new runway (included in the crane contract), show the location and maximum allowable loads (without impact) on the overhead support points.

b) Show the transfer section locations and details.

c) If the particular runway girder is a structural section rather than patented track beam, identify the section shape and grade of steel.

d) Show the nominal compass directions.

e) Show the required load hook approaches at each end of runway and ends of the crane bridge.

f) Show runway girder bracing locations and description.

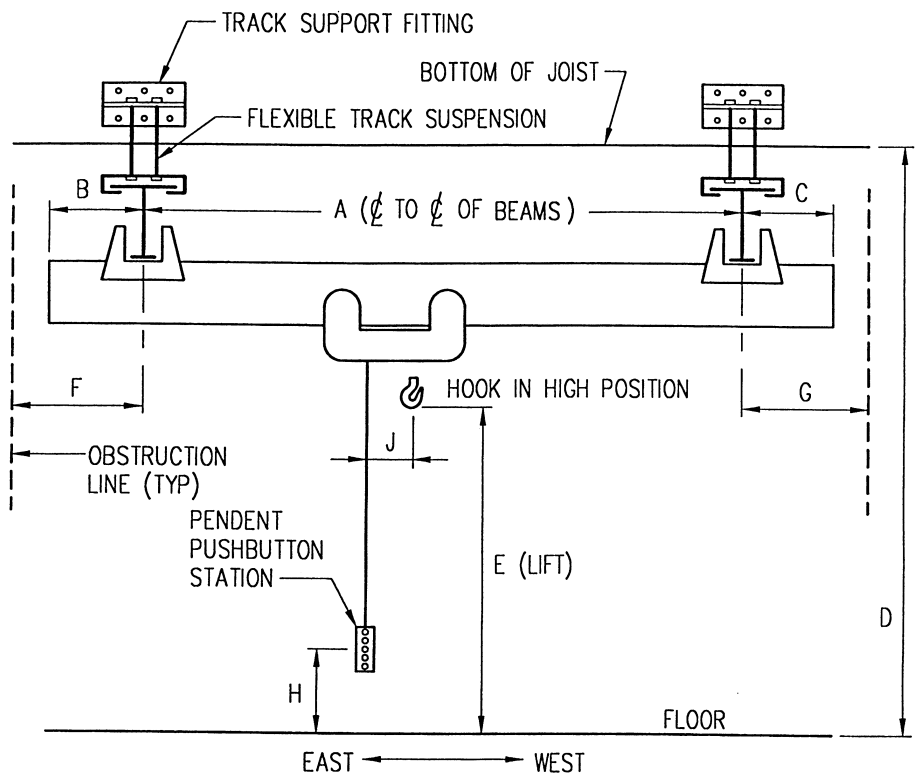

A 48'-0" B 3'-0" C 3'-0"	D 25'-8 1/2" E 14'-6" (MIN) F 3'-6"	G 3'-6" H 4'-0" J 4'-0" (MIN)

MAXIMUM SPAN OF RUNWAY TRACK BEAMS: 10'-8"

MAXIMUM ALLOWABLE LOAD AT RUNWAY TRACK
BEAM SUPPORT POINT (EXCLUDING IMPACT): 18,550 LBS

SKETCH NO. 1

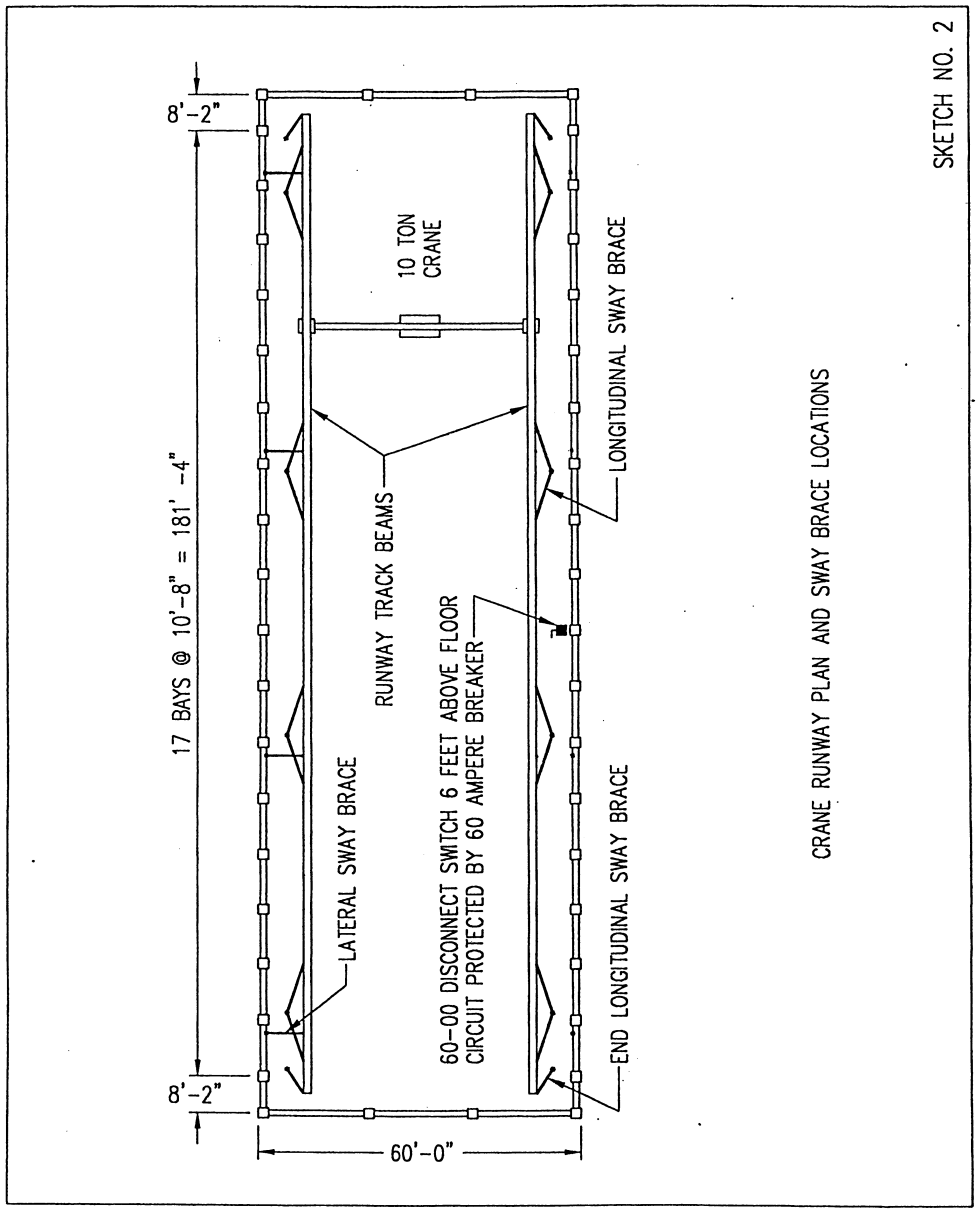
8'-2"
17 BAYS @ 10'-8" = 181' -4"
8'-2"
60'-0"
10 TON CRANE
RUNWAY TRACK BEAMS
LATERAL SWAY BRACE
60-00 DISCONNECT SWITCH 6 FEET ABOVE FLOOR
CIRCUIT PROTECTED BY 60 AMPERE BREAKER
LONGITUDINAL SWAY BRACE
END LONGITUDINAL SWAY BRACE
CRANE RUNWAY PLAN AND SWAY BRACE LOCATIONS
SKETCH NO. 2

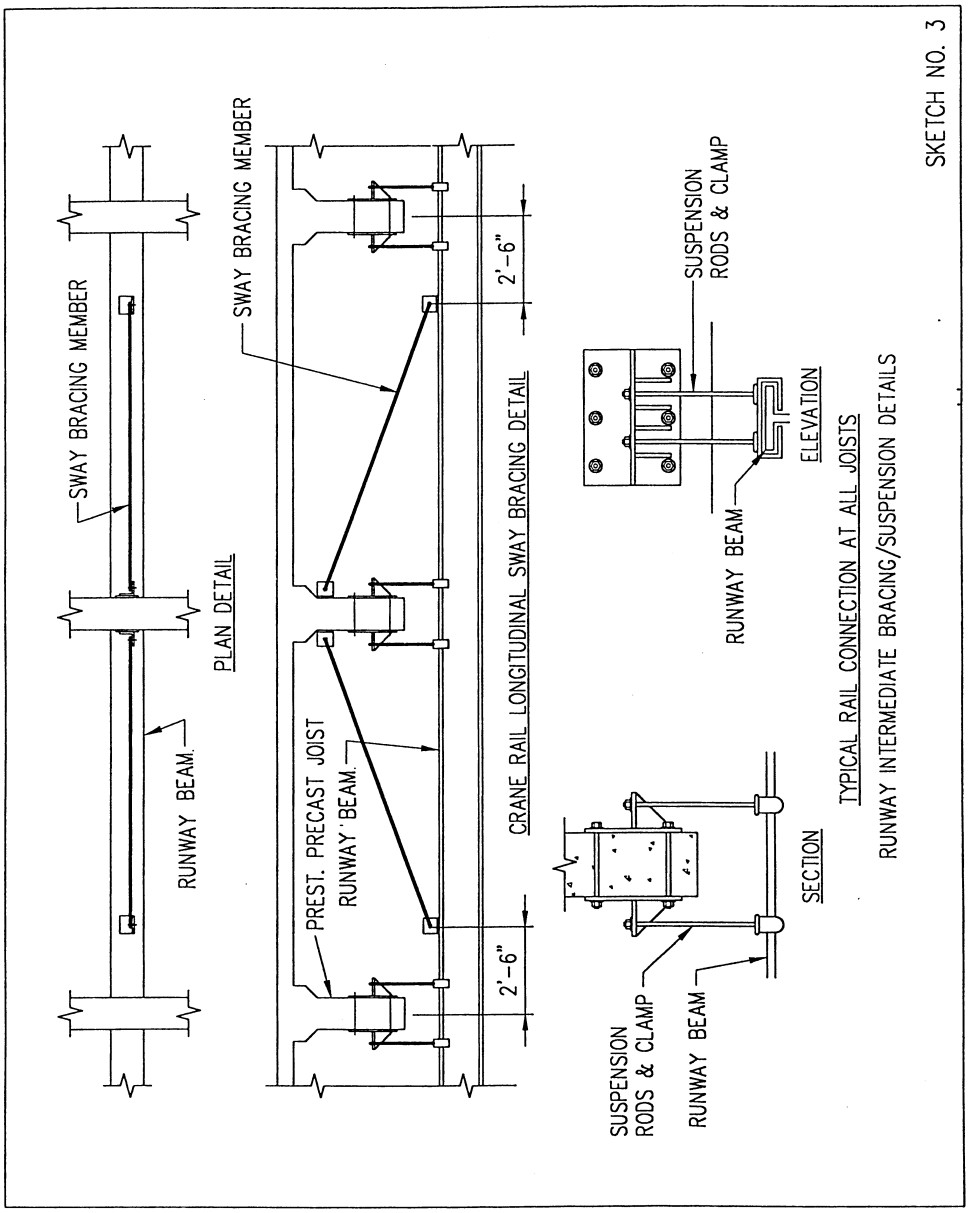
SWAY BRACING MEMBER
RUNWAY BEAM
PLAN DETAIL
SWAY BRACING MEMBER
PREST. PRECAST JOIST
RUNWAY BEAM
2'-6"
2'-6"
CRANE RAIL LONGITUDINAL SWAY BRACING DETAIL
SUSPENSION
RODS & CLAMP
RUNWAY BEAM
ELEVATION
SUSPENSION
RODS & CLAMP
RUNWAY BEAM
SECTION
TYPICAL RAIL CONNECTION AT ALL JOISTS
RUNWAY INTERMEDIATE BRACING/SUSPENSION DETAILS
SKETCH NO. 3

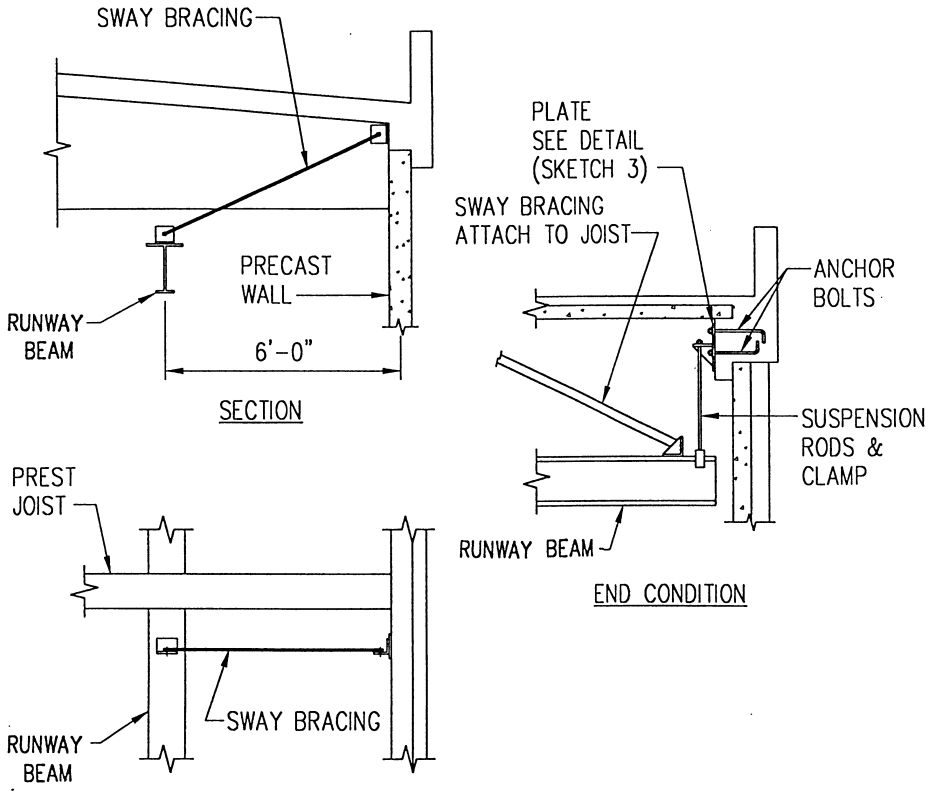

CRANE RAIL TRANSVERSE SWAY BRACING DETAIL

RUNWAY TRANSVERSE AND END BRACING/SUSPENSION DETAILS

SKETCH NO. 4

APPENDIX C

Sample Crane Information Form for
Portal Cranes

Date_____

1. PROJECT INITIATION LETTER_____

2. REQUIREMENT VALIDATED BY _____
Name Signature

3. USING ACTIVITY _____

_____

_____

4. SITE INFORMATION: (Provide site plan)

a) Location (pier, wharf, drydock)
_____

b) Erection or off-loading point
_____

c) Clearances along the entire operational rail circuit for the crane(s). (Provide clearance profiles to the nearest obstructions along the rail circuit.)

d) Straight track gauges _____/_____ (feet/inches)

e) Minimum inner rail radius _____/_____ (feet/inches)

f) Rail size _____ (pounds/yard)

g) Maximum allowable wheel load and spacing _____/_____ (pound and inches) (Due only to the dead load and rated hook load)

5. NUMBER OF IDENTICAL CRANES REQUIRED: _____
(If cranes are not identical, prepare a separate form for each crane)

6. RATED CAPACITY AND MAXIMUM REACH: (Straight-line rated cranes)

a) Main hoist _____/_____ (short tons/feet)

b) Auxiliary hoist _____/_____ (short tons/feet)
(When justified, normally not provided)

c) Whip hoist _____/_____(short tons/feet)
(Specify the desired minimum reach for a particular hoist, which will govern the minimum reach(es) of the other hoist(s).

(For variably rated cranes, provide specific combinations of capacity and reach that are required for each hoist.)

7. HOOK LIFTING RANGES: (Above tope of rails/radius.)

a) Main hoist _____/_____ (feet)

b) Auxiliary hoist _____/_____ (feet)

c) Whip hoist _____/_____ (feet)

d) All hooks, below top of rails at minimum radius _____/_____ (feet)

8. SPEEDS: (High/low at rated capacity)

a) Main hoist _____/_____(feet per minute)

b) Auxiliary hoist _____/_____ (feet per minute)

c) Whip hoist _____/_____ (feet per minute)

d) Luffing hoist _____/_____ (minutes from maximum to minimum radius)

e) Travel _____/_____ (feet per minute)

f) Rotate _____/_____ (revolutions per minute)

9. DRIVE CONTROL SYSTEM: (Specify in detail for each drive.)

DC load-sensitive or fixed speed points; or hydraulic with fixed speed points or variable. Indicate the number of speed points, drift points, quarter speed range, motion jogging, or other desired characteristics.

Main hoist_____
Auxiliary hoist (if provided)_____
Whip hoist_____
Luffing hoist_____
Travel_____
Rotate_____

10. DIMENSIONAL REQUIREMENTS:

a) Boom hinge pin height _____/_____ (feet/inches) above top of rails.

b) Minimum clearance under portal base _____/_____ (feet/inches)

c) Minimum clearance between portal base legs _____/_____ (feet/inches)

d) Maximum tail swing _____/_____ (feet/inches)

11. CRANE SERVICE: (Check and fill-in appropriate items.)

a) General Purpose Service (GPS): Yes _____ No _____
(If “no”, see Section 6)

b) Special Purpose Service (SPS): Yes _____

Captivation and containment required? Yes _____ No _____

c) Ordnance/Explosives Handling: Yes _____

d) Longshoring: Yes _____

e) Brief explanation of the operating procedure: _____

_____

_____

12. OPERATING ENVIRONMENT:

a) Ambient temperatures (High _____ Low _____)

b) Sand blast (Yes _____ No _____)

c) Back-up shore power operation (Yes _____ No _____)
(If yes, describe the power characteristics)_____

_____

13. SPECIAL REQUIREMENTS:

a) Is any special paint required?_____

b) Is fungus resistance treatment required for any electrical components?_____

c) Is radio interference suppression required?_____Class_____

d) Is there a requirement for simultaneous operation with two hooks?
Yes _____ No _____ (If yes, explain)_____

_____

_____

e) Are there any other conditions or operational requirements that should be considered in the design and fabrication of the crane(s)?

_____

_____

_____

_____

Provide sketches and complete description for all of the above features that apply. Add any other features or requirements that may be appropriate.

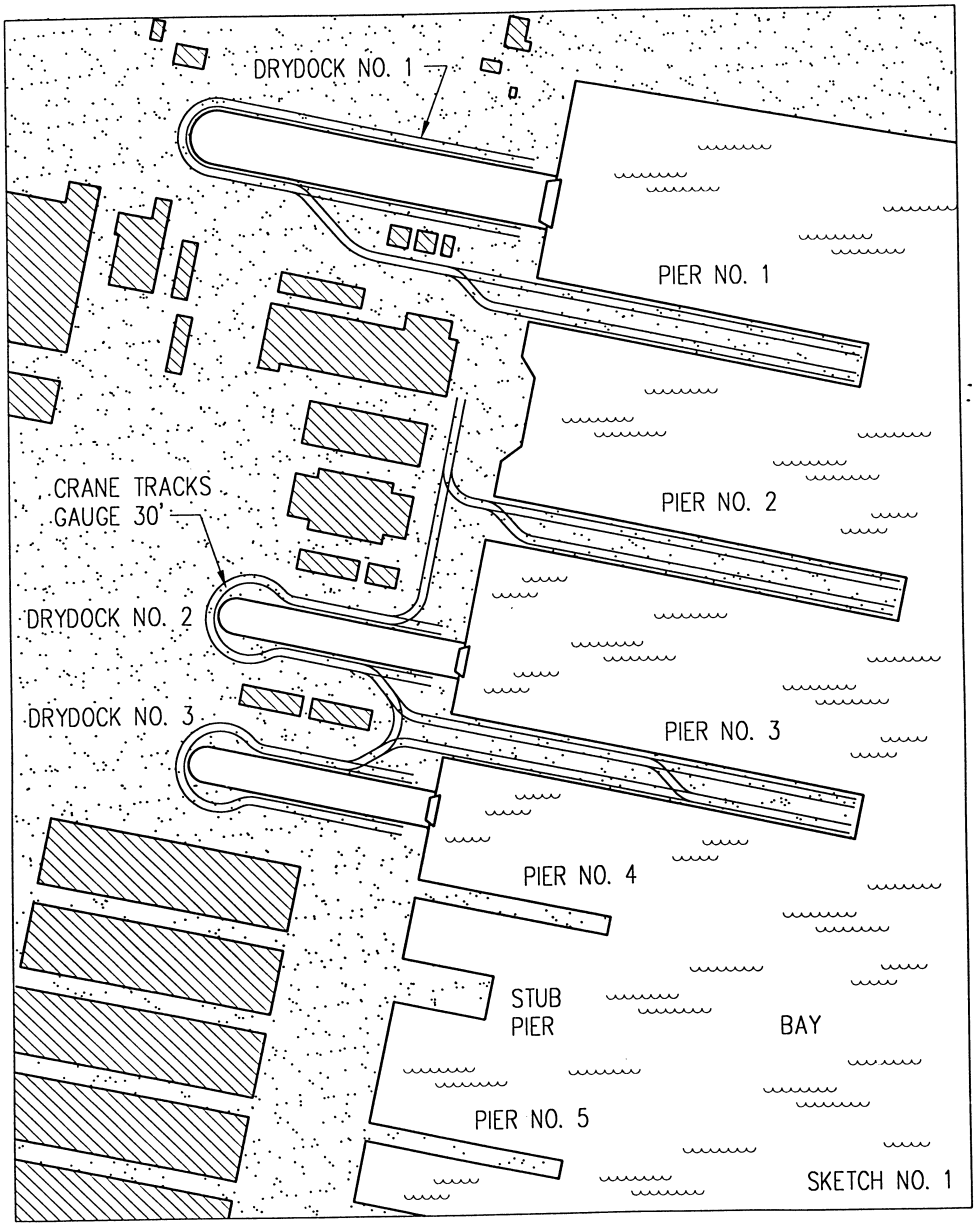
DRYDOCK NO. 1
PIER NO. 1
PIER NO. 2
CRANE TRACKS
GAUGE 30'
DRYDOCK NO. 2
DRYDOCK NO. 3
PIER NO. 3
PIER NO. 4
STUB
PIER
BAY
PIER NO. 5
SKETCH NO. 1

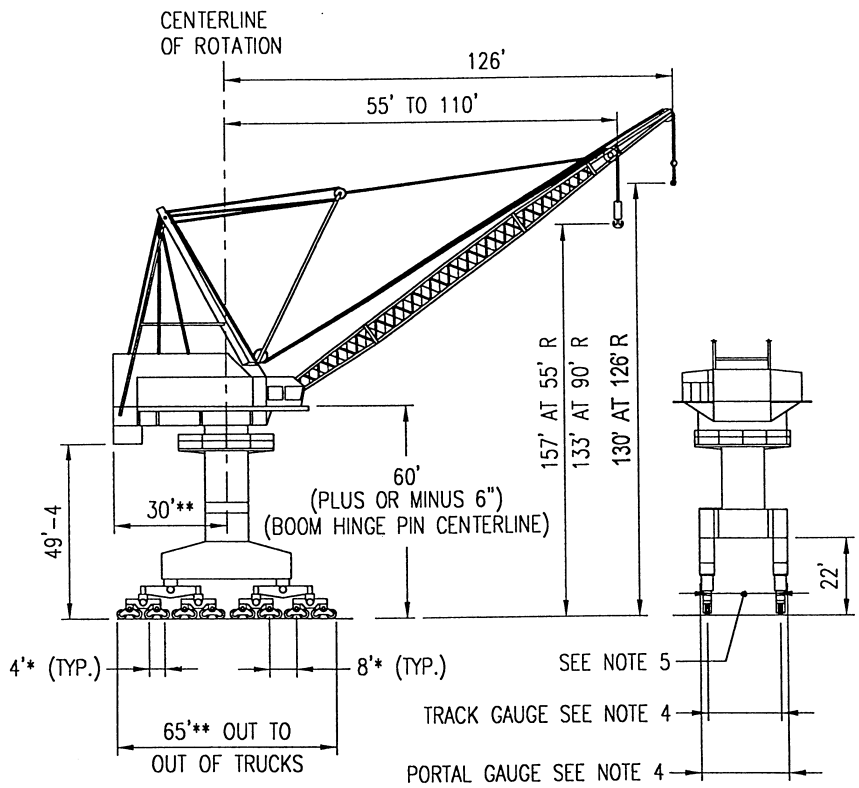

NOTES:
1. ALL DIMENSIONS ARE IN FEET; AND UNLESS NOTED OTHERWISE, ARE THE MINIMUM REQUIRED.
2. A SINGLE ASTERISK (*) INDICATES EXACT DIMENSIONS REQUIRED.
3. A DOUBLE ASTERISK (**) INDICATES DIMENSIONS TO BE MAXIMUM ALLOWED.
4. PORTAL AND TRACK GAUGES VARY WITH EACH NAVAL SHIPYARD.
5. CLEARANCE BETWEEN PORTAL BASE LEGS VARIES WITH EACH NAVAL SHIPYARD.

DIMENSIONS AND DESIGN CONCEPT

SKETCH NO. 2

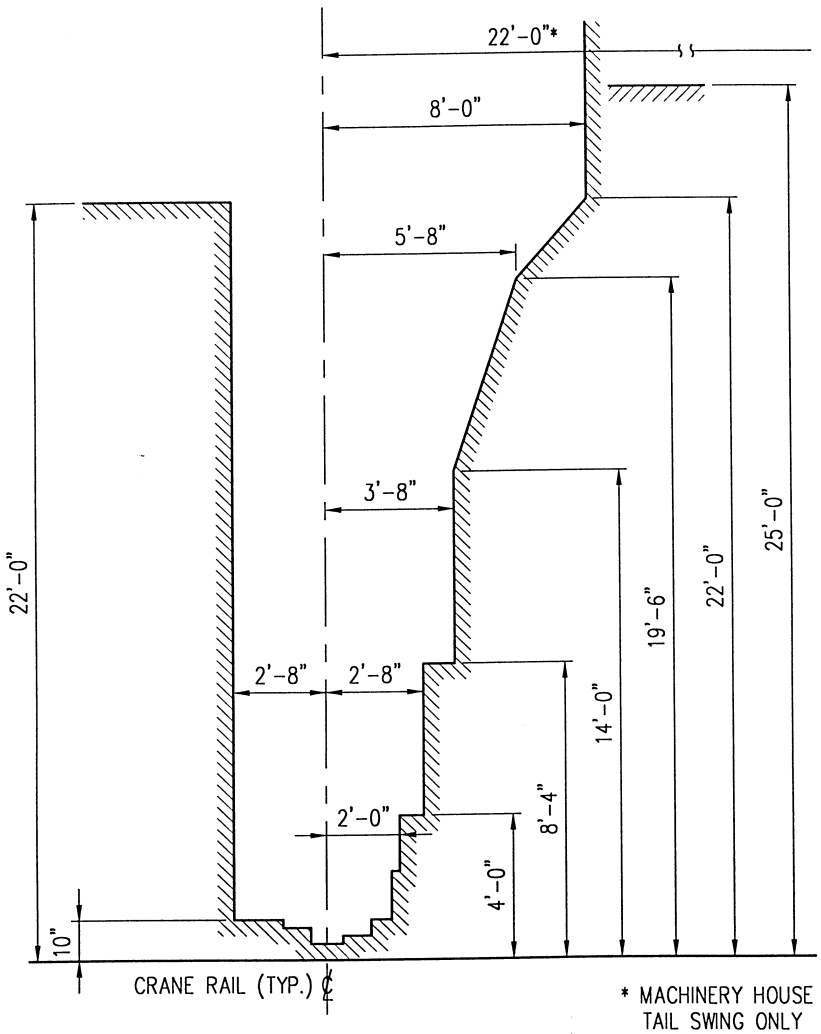

CLEARANCE OUTLINE (INCLUDING ALL FLOAT)

* MACHINERY HOUSE TAIL SWING ONLY

NAVSHIPYD PUGET CLEARANCE OUTLINE

SKETCH NO. 3

REFERENCES

NOTE: THE FOLLOWING REFERENCED DOCUMENTS FORM A PART OF THIS HANDBOOK TO THE EXTENT SPECIFIED HEREIN. USERS OF THIS HANDBOOK SHOULD REFER TO THE LATEST REVISIONS OF THE CITED DOCUMENTS UNLESS OTHERWISE DIRECTED.

GOVERNMENT DOCUMENTS AND PUBLICATIONS:

Federal Standard RR-W-410 Wire Rope and Strand

Unless otherwise indicated, copies are available from the Naval Publishing and Printing Service Office (NPPSO), Standardization Document Order Desk, Building 4D, 700 Robbins Avenue, Philadelphia, PA 19111-5094.

NON-GOVERNMENT PUBLICATIONS:

AMERICAN BUREAU OF SHIPPING

Rules for Building and Classing of Steel Barges

AMERICAN GEAR MANUFACTURERS ASSOCIATION

AGMA 908 Geometry Factors for Determining the Pitting Resistance and Bending Strength of Spur, Helical and Herringbone Gear Teeth

ANSI/AGMA 2000 Gear Classification and Inspection Handbook – Tolerances and Measuring Methods for Unassembled Spur and Helical Gears (Including Metric Equivalents)

ANSI/AGMA 2001 Fundamental Rating Factors and Calculation Methods for Involute Spur and Helical Gear Teeth

ANSI/AGMA 6019 American National Standard for Gearmotors Using Spur, Helical, Herringbone, Straight Bevel, and Spiral Bevel Gears

ANSI/AGMA 6034 American National Standard – Practice for Enclosed Cylindrical Worm Speed Reducers and Gearmotors

ANSI/AGMA 9002 Bores and Keyways for Flexible Couplings

Unless otherwise indicated, copies are available from the American Gear Manufacturers Association, 1910 North Fort Meyer Drive, Suite 1000, Arlington, VA 22209.

AMERICAN INSTITUTE OF STEEL CONSTRUCTION

Manual of STEEL CONSTRUCTION – Allowable Stress Design

Specification for Structural Joints Using ASTM A325 or A490 Bolts

Quality Criteria and Inspection Standards

Unless otherwise indicated, copies are available from the American Institute of Steel Construction, Inc. Wrigley Building, 8th Floor, 400 N. Michigan Avenue, Chicago, IL 60611.

AMERICAN PETROLEUM INSTITUTE

API Specification 2C – Specification for Offshore Cranes

PSD 2214 – Spark Ignition Properties of Hand Tools

Unless otherwise indicated, copies are available from the American Petroleum Institute, 1220 “L” Street, NW, Washington, DC 20005.

AMERICAN SOCIETY OF CIVIL ENGINEERS

ANSI/ASCE 7-95 Minimum Design Loads for Buildings and Other Structures

Unless otherwise indicated, copies are available from the American Society of Civil Engineers, World Headquarters, 1801 Alexander Bell Drive, Reston, VA 20191.

AMERICAN SOCIETY OF MECHANICAL ENGINEERS

ANSI/ASME B4.1 Preferred Limits and Fits for Cylindrical Parts.

ANSI/ASME B17.1 Keys and Keyseats

ASME B18.8.2 Taper Pins, Dowel Pins, Straight Pins, Grooved Pins, and Spring Pins

ASME B30.2 Overhead and Gantry Cranes (Top Running Bridge, Single or Multiple Girder, top Running Trolley Hoist)

ASME B30.4 Portal, Tower, and Pillar Cranes

ASME B30.5 Mobile and Locomotive Cranes

ASME B30.8 Floating Cranes and Floating Derricks

ASME B30.11 Monorails and Underhung Cranes

ASME B30.16 Overhead Hoists (Underhung)

ASME B30.17 Overhead and Gantry Cranes (Top Running Bridge, Single Girder, Underhung Hoist)

ASME B30.24 (under development) – Container Cranes

ANSI/ASME B106.1M Design of Transmission Shafting

ASME HST-1M Performance Standard for Electric Chain Hoists

ASME HST-2M Performance Standard for Hand Chain Manually Operated Chain Hoists

ASME HST-4M Performance Standard for Electric Wire Rope Hoists

ASME HST-5M Performance Standard for Air Chain Hoists

ASME HST-6M Performance Standard for Air Wire Rope Hoists

Unless otherwise indicated, copies are available from the American Society of Mechanical Engineers, 345 East 47th street, New York, NY 10017.

AMERICAN SOCIETY FOR TESTING AND MATERIALS

ASTM A6/A6M General Requirements for Rolled Structural Steel Bars, Plates, Shapes, and Sheet Piling

ASTM A504 Wrought Carbon Steel Wheels

ASTM Standards (for Various Materials and Testing)

Unless otherwise indicated, copies are available from the American Society for Testing and Materials, 1916 Race street, Philadelphia, PA 19103.

AMERICAN WELDING SOCIETY

ANSI/AWS D1.1 Structural Welding Code – Steel

ANSI/AWS D14.1 Specification for Welding of Industrial and Mill Cranes and Other Material Handling Equipment

ANSI/AWS D14.3 Specification for Earthmoving and Construction Equipment

Unless otherwise indicated, copies are available from the American Welding Society, 550 NW Le Jeune Road, Miami, FL 33126.

ASSOCIATION OF IRON AND STEEL ENGINEERS

AISE Standard No. 1 D.C. Mill Motor Standards

AISE Standard No. 8 Insulated Conductors for Crane and Mill Auxiliary Motors

AISE Standard No. 11 D.C. Mill Motor Brake Standard

Unless otherwise indicated, copies are available from the Association of Iron and Steel Engineers, Suite 2350, Three Gateway Center, Pittsburgh, PA 15222.

CRANE MANUFACTURERS ASSOCIATION OF AMERICA

No. 70 Specification for Top Running Bridge & Gantry Type Multiple Girder Electric Overhead Traveling Cranes.

No. 74 Specification for Top Running & Under Running Single Girder Electric Overhead Traveling Cranes Utilizing Under Running Trolley Hoist

Unless otherwise indicated, copies are available from The Material Handling Institute, 8720 Red Oak Boulevard, Suite 201, Charlotte, NC 28217.

E. & F. N. Spon

Electric Cranes by H.H. Broughton

Unless otherwise indicated, copies are available from E. & F.N. Spon, 22 Henrietta Street, W.C.2, London, England

FEDERATION EUROPEENE DE LA MANUTENTION

Rules for the Design of Hoisting Appliances

Unless otherwise indicated, copies are available from Secretariat de la Section I M. SICOT-10, Avenue Hoche 75 Paris (8e), France.

MONORAIL MANUFACTURERS' ASSOCIATION

ANSI MH27.1 Specifications for Patented Track Underhung Cranes and Monorail Systems.

Unless otherwise indicated, copies are available from Monorail Manufacturers Association, 8720 Red Oak Boulevard, Suite 201, Charlotte, NC 28217.

NATIONAL ELECTRICAL MANUFACTURER'S ASSOCIATION

MG-1 Motors and Generators

ICS 2 Industrial Control and Systems Controllers, Contactors, and Overload Relays Rated Not More than 2000 Volts AC or 750 Volts DC.

ICS 8 Industrial Control and Systems Crane and Hoist Controllers

ICS 9 Industrial Control and Systems Power Circuit Accessories

No. 250 Enclosures for Electrical Equipment (1000 Volts Maximum)

Unless otherwise indicated, copies are available from the National Electrical Manufacturers' Association, 2101 "L" Street NW, Washington, DC 20005.

NATIONAL FIRE PROTECTION ASSOCIATION

No. 70 National Electrical Code

Unless otherwise indicated, copies are available from the National Fire Protection Association, 470 Atlantic Avenue, Boston, MA 02210.

OCCUPATIONAL SAFETY AND HEALTH STANDARDS (OSHA)

29 CFR 1910 General Industry Standards and Interpretations

19 CFR 1917.46 Load Indicating Devices

Unless otherwise indicated, copies are available from the Superintendent of Documents, Government Printing Office, Washington DC 20402.

SOCIETY OF AUTOMOTIVE ENGINEERS

SAE J159 Load Moment System

SAE J376 Load Indicating Devices in Lifting Crane Service

SAE J429 Mechanical and Material Requirements for Externally Threaded Fasteners

SAE J765 Crane Load Stability Test Code

SAE J833 Human Physical Dimensions

SAE J987 Rope Supported Lattice-Type Boom Crane Structures Method of Test

SAE J1028 Mobile Crane Working Area Definitions

SAE J1063 Cantilevered Boom Crane Structures Method of Test

SAE J1078 A Recommended Method of Analytically Determining the Competence of Hydraulic Telescopic Cantilevered Crane Booms

SAE J1093 Latticed Crane Boom Systems – Analytical Procedure

SAE J1289 Mobile Crane Stability Ratings

SAE J1305 Two-Blocking Warning and Limit Systems in Lifting Crane Service

SAE Standards (for assorted Mechanical Hardware)

Handbook Supplement HS-150, Fluid Conductors and Connectors

Unless otherwise indicated, copies are available from the Society of Automotive Engineers, Inc., 400 Commonwealth Drive, Warrendale, PA 15096.

STEEL STRUCTURES PAINTING COUNCIL

ANSI A159.1 Surface Preparation Specifications

Unless otherwise indicated, copies are available from the Steel Structures Painting Council, 4400 Fifth Avenue, Pittsburgh, PA 15213

STRUCTURAL ENGINEERS ASSOCIATION OF CALIFORNIA

SEAOC Manual-Recommended Lateral Force Requirements and Commentary

Unless otherwise indicated, copies are available from the Structural Engineers Association of California, ICBO, 5360 Workman Mill Road, Whittier, CA 90601.

WHITING CORPORATION

Whiting Crane Handbook

Unless otherwise indicated, copies are available from the Whiting Corporation, 15700 Lathrop Avenue, Harvey IL 60426

JOHN WILEY AND SONS

Stress Concentration Factors, by R.E. Peterson

Unless otherwise indicated, copies are available from John Wiley and Sons Publishing, U.S. Distribution Center (USDC), 1 Wiley Drive, Somerset NJ 08875-1272

WIRE ROPE TECHNICAL BOARD

Wire Rope Users Manual

Unless otherwise indicated, copies are available from the Wire Rope Technical Board, P.O. Box 849, Stevensville, MD 21666

CUSTODIAN:
NAVY - YD2

PREPARING ACTIVITY:
NAVY - YD2

PROJECT NUMBER:
FACR-1182

STANDARDIZATION DOCUMENT IMPROVEMENT PROPOSAL

INSTRUCTIONS

1. The preparing activity must complete blocks 1, 2, 3, and 8. In block 1, both the document number and revision letter should be given.

2. The submitter of this form must complete blocks 4, 5, 6, and 7.

3. The preparing activity must provide a reply within 30 days from receipt of the form.

NOTE: This form may not be used to request copies of documents, nor to request waivers, or clarification of requirements on current contracts. Comments submitted on this form do not constitute or imply authorization to waive any portion of the referenced document(s) or to amend contractual requirements.

I RECOMMEND A CHANGE:	1. DOCUMENT NUMBER MIL-HDBK-1038	2. DOCUMENT DATE *(YYMMDD)* 980306

3. DOCUMENT TITLE WEIGHT HANDLING EQUIPMENT

4. NATURE OF CHANGE *(identify paragraph number and include proposed rewrite, if possible. Attach extra sheets as needed.)*

5. REASON FOR RECOMMENDATION

6. SUBMITTER

a. NAME *(Last, First, Middle Initial)*	b. ORGANIZATION	
c. ADDRESS *(Include Zip Code)*	d. TELEPHONE *(Include Area Code)* (1) Commercial (2) DSN *(If applicable)*	7. DATE SUBMITTED: *(YYMMDD)*

8. PREPARING ACTIVITY

a. NAME DIRECTOR NAVY CRANE CENTER CRITERIA OFFICE	b. TELEPHONE *(Include Area Code)* (1) Commercial (610) 595-0505 (2) DSN 443-0505
c. ADDRESS *(Include Zip Code)* 10 INDUSTRIAL HWY MS#82 LESTER, PA 19113-2090	**IF YOU DO NOT RECEIVE A REPLY WITHIN 45 DAYS, CONTACT:** Defense Quality and Standardization Office 5203 Leesburg Pike, Suite 1403, Falls Church, VA 22041-3466 Telephone (703) 756-2340 DSN 289-2340