UFC 3-410-05N
16 January 2004

UNIFIED FACILITIES CRITERIA (UFC)

OPERATION AND MAINTENANCE: HEATING SYSTEMS

APPROVED FOR PUBLIC RELEASE; DISTRIBUTION UNLIMITED

UNIFIED FACILITIES CRITERIA (UFC)

OPERATION AND MAINTENANCE: HEATING SYSTEMS

Any copyrighted material included in this UFC is identified at its point of use.
Use of the copyrighted material apart from this UFC must have the permission of the copyright holder.

U.S. ARMY CORPS OF ENGINEERS

NAVAL FACILITIES ENGINEERING COMMAND (Preparing Activity)

AIR FORCE CIVIL ENGINEERING SUPPORT AGENCY

Record of Changes (changes indicated by **1**\ ... /**1**/)

Change No.	Date	Location

FOREWORD

The Unified Facilities Criteria (UFC) system is prescribed by MIL-STD 3007 and provides planning, design, construction, sustainment, restoration, and modernization criteria, and applies to the Military Departments, the Defense Agencies, and the DoD Field Activities in accordance with USD(AT&L) Memorandum dated 29 May 2002. UFC will be used for all DoD projects and work for other customers where appropriate.

UFC are living documents and will be periodically reviewed, updated, and made available to users as part of the Services' responsibility for providing technical criteria for military construction. Headquarters, U.S. Army Corps of Engineers (HQUSACE), Naval Facilities Engineering Command (NAVFAC), and Air Force Civil Engineer Support Agency (AFCESA) are responsible for administration of the UFC system. Defense agencies should contact the preparing service for document interpretation and improvements. Technical content of UFC is the responsibility of the cognizant DoD working group. Recommended changes with supporting rationale should be sent to the respective service proponent office by the following electronic form: Criteria Change Request (CCR). The form is also accessible from the Internet sites listed below.

UFC are effective upon issuance and are distributed only in electronic media from the following sources:

- Unified Facilities Criteria (UFC) Index http://65.204.17.188//report/doc_ufc.html.
- USACE TECHINFO Internet site http://www.hnd.usace.army.mil/techinfo/index.htm.
- NAVFAC Engineering Innovation and Criteria Office Internet site http://criteria.navfac.navy.mil.
- Construction Criteria Base (CCB) system maintained by the National Institute of Building Sciences at Internet site http://www.nibs.org/ccb.

Hard copies of UFC printed from electronic media should be checked against the current electronic version prior to use to ensure that they are current.

AUTHORIZED BY:

Dwight A Beranek, P.E.
Chief, Engineering and Construction Division
U.S. Army Corps of Engineers

Dr. James W Wright, P.E.
Chief Engineer
Naval Facilities Engineering Command

KATHLEEN I. FERGUSON, P.E.
The Deputy Civil Engineer
DCS/Installations & Logistics
Department of the Air Force

Frank Lane
Director of Analysis & Investment
Deputy Under Secretary of Defense
for Installations and Environment
Department of Defense

CONTENTS

Page

CHAPTER 1 INTRODUCTION

Paragraph 1-1 PURPOSE AND SCOPE 1-1
1-2 APPLICABILITY 1-1
1-2.1 General Building Requirements 1-1
1-2.2 Safety 1-1
1-2.3 Fire Protection 1-1
1-2.4 Antiterrorism/Force Protection 1-1
1-3 REFERENCES 1-1

APPENDIX A MIL-HDBK 1114/2 ..... A-1

CHAPTER 1

INTRODUCTION

1-1 **PURPOSE AND SCOPE**. This UFC is comprised of two sections. Chapter 1 introduces this UFC and provides a listing of references to other Tri-Service documents closely related to the subject. Appendix A contains the full text copy of the previously released Military Handbook (MIL-HDBK) on this subject. This UFC serves as criteria until such time as the full text UFC is developed from the MIL-HDBK and other sources.

This UFC provides general criteria for operating and maintaining heating systems.

Note that this document does not constitute a detailed technical design, and is issued as a general guide to the considerations associated with operating and maintaining heating systems.

1-2 **APPLICABILITY**. This UFC applies to all Navy service elements and Navy contractors; Army service elements should use the references cited in paragraph 1-3 below; all other DoD agencies may use either document unless explicitly directed otherwise.

1-2 **APPLICABILITY**. This UFC applies to all DoD agencies and contractors preparing designs of maintenance facilities for ammunition, explosives and toxins.

1-2.1 **GENERAL BUILDING REQUIREMENTS**. All DoD facilities must comply with UFC 1-200-01, *Design: General Building Requirements*. If any conflict occurs between this UFC and UFC 1-200-01, the requirements of UFC 1-200-01 take precedence.

1-2.2 **SAFETY**. All DoD facilities must comply with DODINST 6055.1 and applicable Occupational Safety and Health Administration (OSHA) safety and health standards.

NOTE: All **NAVY** projects, must comply with OPNAVINST 5100.23 (series), *Navy Occupational Safety and Health Program Manual*. The most recent publication in this series can be accessed at the NAVFAC Safety web site: www.navfac.navy.mil/safety/pub.htm. If any conflict occurs between this UFC and OPNAVINST 5100.23, the requirements of OPNAVINST 5100.23 take precedence.

1-2.3 **FIRE PROTECTION**. All DoD facilities must comply with UFC 3-600-01, *Design: Fire Protection Engineering for Facilities*. If any conflict occurs between this UFC and UFC 3-600-01, the requirements of UFC 3-600-01 take precedence.

1-2.4 **ANTITERRORISM/FORCE PROTECTION**. All DoD facilities must comply with UFC 4-010-01, *Design: DoD Minimum Antiterrorism Standards for Buildings*. If any conflict occurs between this UFC and UFC 4-010-01, the requirements of UFC 4-010-01 take precedence.

1-3 **REFERENCES**. The following Tri-Service publications have valuable information on the subject of this UFC. When the full text UFC is developed for this subject, applicable portions of these documents will be incorporated into the text. The designer is encouraged to access and review these documents as well as the references cited in Appendix A.

1. US Army Corps of Engineers
   Commander
   USACE Publication Depot
   ATTN: CEIM-IM-PD
   2803 52nd Avenue
   Hyattsville, MD 20781-1102
   (301) 394-0081 fax: 0084
   karl.abt@hq02.usace.army.mil
   http://www.usace.army.mil/inet/usace-docs/

   USACE TM 5-642, Operations and Maintenance, Small Heating Systems, 30 August 1990

APPENDIX A

MIL-HDBK 1114/2
OPERATION AND MAINTENANCE: HEATING SYSTEMS

INCH-POUND

MIL-HDBK-1114/2
31 DECEMBER 1991
SUPERSEDING
NAVDOCKS MO-114
APRIL, 1964

MILITARY HANDBOOK

MAINTENANCE AND OPERATION OF HEATING SYSTEMS

AMSC N/A

AREA FACR

DISTRIBUTION STATEMENT A. APPROVED FOR PUBLIC RELEASE: DISTRIBUTION IS UNLIMITED

ABSTRACT

This handbook provides practical information for the operation and maintenance of heating systems at shore facilities. The described practices and procedures are recommended to ensure safety and reliability, as well as maximum readiness for facilities at a minimal cost.

The contents of this handbook include policy and procedural information; gas-fired and oil-fired furnace details; electric heating systems; steam and hot water systems; and heat pump processes. There is specific information included for electrical circuits, steam traps, and maintenance procedures.

FOREWORD

The purpose of this publication is to provide practical information on the operation and maintenance of heating systems with special emphasis on economy consistent with safety. It is primarily directed to the workers in the field who actually supervise and perform operation and maintenance work. Although the general subject of heating systems is highly technical, this publication has been written in nontechnical language, brief and direct, so that the reader will have the basic information required for the intelligent handling of field situations.

Recommendations for improvement are encouraged from within the Navy, other Government agencies, and the private sector, and should be furnished on the DD Form 1426 provided inside the back cover to Commander, Northern Division, Naval Facilities Engineering Command, Code 164, Philadelphia, PA 19112-5094; telephone commercial (215) 897-6688.

THIS HANDBOOK SHALL NOT BE USED AS A REFERENCE DOCUMENT FOR PROCUREMENT OF EQUIPMENT. IT IS TO BE USED AS A GUIDE TO ESTABLISH MAINTENANCE AND OPERATION PROCEDURES OF HEATING SYSTEMS. DO NOT REFERENCE IT IN MILITARY OR FEDERAL SPECIFICATIONS OR OTHER PROCUREMENT DOCUMENTS.

MAINTENANCE AND OPERATION OF HEATING SYSTEMS

CONTENTS

		Page
Section 1	INTRODUCTION	
1.1	Purpose	1
1.2	Cancellation	1
1.3	Training	1
1.4	Educational Program	1
1.5	Keeping As-Built Drawing Records	1
1.6	Manufacturers' Instructions	2
1.7	Maintenance Program	2
1.7.1	Inspection	2
1.7.2	Maintenance	2
1.7.3	Repair	2
1.8	Tool Requirement	3
1.8.1	Required Tools	3
1.9	Safety	4
Section 2	RESIDENTIAL AND COMMERCIAL GAS FIRED FURNACES	
2.1	Fuels	7
2.1.1	Natural Gas as a Fuel	7
2.1.2	Liquified Petroleum (LP) Gas as a Fuel	7
2.2	Gas Burning Equipment	10
2.3	Atmospheric Gas Burners	10
2.4	Light Off	14
2.5	Pilot Burner	15
2.6	Combination Gas Valve	18
2.7	Bimetal Type Pilot	20
2.8	Automatic Reignition	20
2.9	Low Gas Pressure Cutout	21
2.10	Heat Exchanger	21
2.11	Furnace Fan	23
2.11.1	Fan Switch	23
2.12	Limit Switches	27
2.13	Millivoltage Systems	29
2.13.1	Pilot Relay	30
2.13.2	Automatic Flue Damper	33
2.14	Electronic Ignition Systems	34
2.14.1	Retrofitting to Electronic Ignition	35
2.15	Condensing Furnaces	36
2.16	Troubleshooting Gas-Fired Furnaces	36
Section 3	RESIDENTIAL AND COMMERCIAL OIL-FIRED FURNACES	
3.1	Oil-Fired System	43
3.2	Oil as a Fuel	43
3.3	Oil Combustion	44
3.3.1	Role of Excess Air in Combustion	48

Page

3.3.2	Excess Air-Smoke Relationship	51
3.3.2.1	Effect of Air Leaks	51
3.4	Combustion Chamber	52
3.4.1	Floor Size	53
3.4.2	Shape	53
3.4.3	Walls	53
3.4.4	Burning Setting	57
3.4.5	Baffles	57
3.4.6	Soft Refractory	57
3.5	Heat Exchanger	59
3.6	Draft	60
3.6.1	Draft Regulators	63
3.6.1.1	Draft Over the Fire	65
3.6.1.2	Draft at the Breech Connection	65
3.6.2	Flue and Chimney Exhaust	65
3.7	Fuel Oil Burners	65
3.7.1	Flame-Retention Burners	70
3.7.1.1	Function of Flame Retention Burners	73
3.7.1.2	Adverse Effects of Flame Retention Burners	74
3.8	Burner Motor	75
3.8.1	Primary Controls	76
3.8.2	Cadmium Cell Flame Detectors	76
3.8.3	Stack Detector	79
3.8.4	Stepping the Stack Control	80
3.8.5	Checkout Procedure	80
3.9	Flue Gas Measurement and Flue Loss Efficiency	80
3.9.1	Stack Loss Theory	80
3.9.1.1	Assumptions	81
3.9.2	Measurement of Carbon Dioxide or Oxygen	90
3.9.2.1	Fyrite Analyzer	90
3.9.2.2	Amount of Carbon Dioxide in a Gas Stream	91
3.9.2.3	Testing with Fyrite	92
3.9.2.4	Determining Strength of Absorbing Solution	92
3.9.2.5	Determining Sampling Leakage	93
3.9.3	Other Carbon Dioxide or Oxygen Measurement Techniques	93
3.9.4	Measurement of Flue Gas Temperature	94
3.9.5	Smoke Measurement	95
3.9.6	Draft	97
3.10	Maintenance	99
3.11	Troubleshooting	100
3.11.1	Burner Motor Does Not Start, Starts and Locks Out, or Cycles	100
3.11.2	Burner Does Not Operate Correctly	101

		Page
Section 4	THERMOSTATS	
4.1	Thermostats	104
4.2	Gas Furnace Electrical Circuits	112
4.3	Oil Furnace Electrical Circuits	123
Section 5	ELECTRIC HEAT	
5.1	Resistance Heating	127
5.2	Electric Furnace	127
5.3	Heating Element	128
5.4	Operating Sequence	130
5.5	Element Staging-Single-Stage Thermostat	130
5.6	Blower Control	131
5.7	Electric Furnace Electrical Circuits	131
Section 6	STEAM AND HOT WATER SYSTEMS	
6.1	One-Pipe Hot Water System	138
6.2	Two-Pipe Water System	139
6.3	Control of Water Coils	140
6.4	Steam Piping	145
6.5	Condensate Systems	146
6.6	Condensate Piping	147
6.7	Condensate Pumps	152
6.8	Pipe Expansion	152
Section 7	STEAM TRAPS	
7.1	Steam Trap	155
7.2	Steam Trap Classification	155
7.3	Steam Trap Types	155
7.3.1	Mechanical Traps	156
7.3.1.1	Inverted Bucket Trap (Figure 97, external)	156
7.3.1.2	Float Trap (Figure 98)	157
7.3.2	Thermostatic Traps	157
7.3.2.1	Bimetallic Trap (Figure 100)	160
7.3.2.2	Liquid Filled Bellows or Diaphragm Trap (Figure 101)	160
7.3.2.3	Float and Thermostatic Trap (Figure 102)	160
7.3.2.4	Thermal Expansion Steam Trap (Figure 104)	162
7.3.3	Thermodynamic Traps	163
7.3.3.1	Orifice Trap (Figure 105)	163
7.3.3.2	Piston Impulse Trap (Figure 106)	165
7.3.3.3	Disk Trap (Figure 107)	166
7.4	Selecting the Type of Trap	167
7.4.1	Design Considerations	167
7.4.2	Trap Limitations	173
7.5	Sizing Traps	174
7.5.1	Condensate Load	174
7.5.2	Pressure Differential	174
7.5.3	Safety Factor	174
7.6	Installation Guidelines	176

Page

7.7 Implementing Standards 180
7.8 Economic Benefits of Proper Inspection and Maintenance 180
7.8.1 Replacing Old or Faulty Traps 182
7.8.2 Continuous Inspection and Maintenance 183
7.9 Establishing an Inspection and Maintenance Program . . 184
7.9.1 Baseline Survey 184
7.9.2 System Standards 185
7.9.3 Training 185
7.9.4 Equipment 187
7.9.5 Inspection Schedules 188
7.9.6 Records 188
7.9.7 Upgrade of the System 189
7.10 Inspection Schedules 189
7.11 Safety Precautions. 190
7.12 Inspection Methods 190
7.12.1 Visual Observation 190
7.12.2 Sound Detection 192
7.12.3 Temperature Measurements 192
7.13 Inspection Procedures 192
7.14 Inspection for Misapplication 195
7.15 Trap Failures 196
7.15.1 Residue 196
7.15.2 Wear 196
7.16 Troubleshooting 197
7.17 Inspection Reports and Records 197
7.18 Trap Repair and Replacement 201
7.19 Shop Testing of Steam Traps 201

Section 8 HEAT PUMPS
8.1 Objective 205
8.2 Heat Pumps Versus Electric Heat 205
8.3 Heat Pump Components 206
8.4 Four-Way Reversing Valve 208
8.5 Effect of Outside Temperature 210

Section 9 HEATING SYSTEMS MAINTENANCE PROCEDURES
9.1 Motors and Drives 212
9.2 Filters 212
9.3 Gas Burners 213
9.4 Cleaning of Heat Exchangers 213
9.5 Pilot Burner Orifices 213
9.6 Checking Draft 213
9.7 Controls 213

APPENDIX

			Page
Appendix	A	PREVENTIVE MAINTENANCE AND INSPECTION SCHEDULE	216
	B	ANSWERS TO SELF-STUDY QUESTIONS	231

FIGURES

Figure	1	LP Storage Tank	8
	2	Pressure/Temperature Relationship for Propane and Butane	9
	3	Cross Section of a Typical Atmospheric Gas Burner	11
	4	Fixed Orifice for Delivery of Fuel Gas	12
	5	Manifold and Multiple Burner Arrangement	12
	6	Electrical Voltage Generation Using Two Diodes	16
	7	Pilot Safety Valve in Conjunction with Main Gas Valve	16
	8	Pilot Light Flame Positions	17
	9	Pilot Burner	18
	10	Combination Gas Valve	19
	11	Bimetal Pilot Supply	20
	12	Bimetal Pilot Glow Coil	21
	13	Low Gas Pressure Cutout	22
	14	Heat Exchanger and Furnace Fan	22
	15	Furnace Arrangements	24
	16	Direct Drive and Belt Driven Fans	24
	17	Fan Safety Cutoff Switches	25
	18	Time Delay Fan Switch	26
	19	Internals of Time Delay Fan Switch	27
	20	Combination Fan Limit Switch	28
	21	Millivolt Pilot Generator System	30
	22	Pilot Generator and Thermocouple Construction	31
	23	Pilot Operated Diaphragm Valve	32
	24	Automatic Flue Damper	33
	25	Electronic Ignition Retrofit Kit	35
	26	Relationship Between Excess Air and Percent Carbon Dioxide	48
	27	Representation of the Effect of Excess Air on Combustion Gas Temperature	49
	28	The Effect of Excess Air on Carbon Dioxide	50
	29	Smoke and Efficiency Versus Excess Air Curve	52
	30	Combustion Chamber Design	54
	31	Recommended Minimum Inside Dimensions of Refractory Type Combustion Chambers	58
	32	Approximate Relationship for Percent Excess Air With Flame Temperature and Volume of Combustion Gases	61
	33	Draft Regulator	64
	34	Diagram of Common Chimney Troubles	68

Page

35 Oil Burner for Residential Use 69
36 Atomization and Ignition of Fuel Oil 69
37 Ignition Transformer 70
38 Flame Retention Oil Burner 71
39 Conventional and Retention Head Flames 72
40 Fuel Oil Pump 75
41 Stack-Mounted Primary Control 77
42 One Piece Primary Control 78
43 Cad-Cell Used to Prove Flame to Primary Control 78
44 Switching Action of a Three-Wire Stack Switch 79
45 Distribution of Heat as Determined By the Flue Loss Method 81
46 Theoretical Combustion Relationship Between Carbon Dioxide and Oxygen for No. 2 Heating Oil 83
47 Bacharach Instrument Company's Fire Finder Efficiency Chart 84
48 Graph of Heating Plant Efficiency 89
49 Construction of Carbon Dioxide Gas Analyzer 91
50 Flue Gas Thermometer 94
51 Bacharach Smoke Spot Tester 96
52 Oil Burner Smoke Scale 98
53 Draft Measurement Devices 99
54 Two-Wire Thermostat 104
55 Three-Wire Thermostat With a Subbase 105
56 Manual Changeover, Heating and Cooling Thermostat With Subbase 107
57 Internal Wiring of a Four-Wire Heating/Cooling Thermostat 108
58 System Wiring for a Four-Wire Thermostat With Heating and Cooling Anticipators 109
59 Four-Wire Thermostat Subbase 110
60 Temperature Limit Switch in 24-Volt Circuit 112
61 Temperature Limit Switch in 120-Volt Circuit 113
62 Horizontal or Downflow Furnace With Timed Start Fan Control 114
63 Furnace With Bimetal Pilot Safety Switch 115
64 Honeywell S-86 Electronic Ignition Circuit 116
65 Intermittent Pilot System (IPS) 117
66 Direct Spark Ignition System Troubleshooting Procedure . . 119
67 Carrier, BDP, Payne Pick-Hold Type Ignition 120
68 Automatic Pilot Reignition System Used on Roof-Top Furnaces 121
69 Automatic Electronic Reignition System 122
70 Honeywell R8118 Oil Burner Control 124
71 Honeywell R8119 Oil Primary Control 125
72 Electric Furnace 128
73 Electric Heating Element 129

Page

74 Heat Relay Used for Electric Heat Element Sequencing . . . 130
75 Current Sensing Blower Control 131
76 Electric Heat Single Element 132
77 Electric Heat - Two Elements Operated From a Two-Stage Room Thermostat 134
78 Electric Heat - Three Elements Sequenced From One Room Thermostat 135
79 Electric Heat - Two Elements Sequenced From One Room Thermostat and an Outdoor Thermostat 136
80 One-Pipe Hot Water System 138
81 Monoflow Fittings - Used on Return Side (A), Supply Side (B), or Both Sides of a Hot Water Heater 139
82 Two-Pipe Direct Return Hot Water System 140
83 Two-Pipe Reverse Return Hot Water System 141
84 Two-Pipe Reverse Return System Used to Provide Heating or Cooling (But Not Both Simultaneously) 142
85 Unit Heater 143
86 Face and Bypass Dampers 144
87 Two-Way Control Valve on Heating Coil 144
88 Two-Pipe Steam System 145
89 Condensate Building in an Uninsulated Steam Supply Line . 146
90 End-of-Main Drip Leg Prevents Accumulation of Condensate in the Steam Header 148
91 Correct Method of Preventing Condensate Accumulation When Dropping the Steam Main Below an Obstruction . . . 148
92 Lifting Condensate to an Overhead Return Header 149
93 Modulated Steam Coil With Vacuum Breaker and 12- to 24-Inch Minimum Liquid Leg 150
94 Steam Distributing (Non-Freeze) Type Coil 151
95 Condensate Return Pump 152
96 Piping Detail to Allow for Pipe Expansion 153
97 Inverted Bucket Trap 157
98 Float Trap 158
99 Thermostatic Trap Operation 158
100 Bimetallic Trap 159
101 Bellows and Diaphragm Traps 159
102 Float and Thermostatic (F&T) Trap 161
103 Operation of a Float and Thermostatic Trap 162
104 Thermal Expansion Steam Trap 163
105 Orifice Traps 164
106 Piston Impulse Trap (External Cutaway) 165
107 Disk Trap 166
108 Typical Steam Trap Installations 177
109 Example Baseline Survey Form 186
110 Illustration of Difference Between Flash Steam and Live Steam 191
111 Steam Trap Inspection Equipment 194
112 Example of Inspection Log 200

Page

113 Steam Trap Shop Test Stand 203
114 An Electric Resistance Heater Converts 1 kW of Electricity to 3,414 Btu/hr of Heat 205
115 The Heat Pump Moves 15,414 Btu/hr From the Outside Air Into the Heated Space for a Cost of 1 kW 206
116 Refrigerant Piping for a Heat Pump 207
117 Bypasses Around Thermostatic Expansion Valves 208
118 Four-Way Reversing Drive 209

TABLES

Table 1 Orifice Capacity Table (10 cubic Btu/hr) 13
2 Pilot Burner Service Analysis Chart 37
3 Troubleshooting Furnace Operations 38
4 Amount by Weight and Volume of Combustion Products When One Pound of Fuel Oil is Burned (0 Percent Excess Air) . . . 46
5 Amount by Weight and Volume of Combustion Products When One Pound of Fuel Oil is Burned (50 Percent Excess Air) . . 47
6 Combustion Chamber Sizing Data 55
7 Example of Draft Changes in a Chimney 63
8 Recommended Size and Height for Chimneys 66
9 Common Chimney Troubles and Their Corrections 67
10 Efficiency Table for No. 2 Oil (Oxygen vs Temperature) . . 85
11 Efficiency Table for No. 2 Oil (Carbon Dioxide vs Temperature) 87
12 Thermostat Service Analysis 111
13 Steam Trap Selection Guide 168
14 Steam Trap Operating Characteristics 171
15 Estimating Condensate Loads 175
16 Percentage Reduction in Steam Trap Capacity 176
17 Example of a Standard Steam Trap Selection Table 180
18 Examples of Steam Loss for Various Orifice Sizes at 100 psig 181
19 Inspection and Maintenance Program Training 187
20 Normal Pipe Temperatures at Various Operating Pressures . 193
21 Troubleshooting Steam Traps 198
22 Common Steam Trap Malfunctions 202

REFERENCES 236

GLOSSARY 237

Section 1: INTRODUCTION

1.1 Purpose. This handbook provides guidance and reference material needed for the maintenance and operation of heating systems in structures throughout the Naval Shore Establishment. Information given applies to inspection, maintenance, and repairs of water heaters, space heaters, gas and oil burners, steam and hot water systems, and forced warm air systems.

1.2 Cancellation. This handbook cancels and supersedes Chapter 2 of NAVDOCKS MO-114, Plumbing, Heating and Ventilation, dated April, 1964.

1.3 Training. This handbook is prepared for use by maintenance mechanics familiar with heating systems and domestic hot water systems terminology. For trainees and apprentices who may need additional instruction in the trade, the following correspondence courses are available from Naval Public Works Training Center, NAVFACENGCOMHQ DET (Code 161.5), PW Industrial Management Division, 1220 Pacific Highway, San Diego, CA 92132-5190.

Course No.	Title
100	Basic Arithmetic
105	Basic Craft Tools
115	Basic Water and Sewage
120	Basic Public Works Maintenance Management
130	Heating and Maintenance - Basic
230	Heating and Maintenance - Intermediate
330	Heating and Maintenance - Advanced

Video Tapes Available:

Naval Civil Engineering Laboratory, (NCEL):

"Maintenance and Tune-Up of Oil-Fired Furnaces and Hot Water Heaters"

Naval Energy and Environmental Support Activity, (NEESA):

"Boiler Maintenance, Steam Traps, etc."

1.4 Educational Program. Every user of a heating system should be encouraged to assist in maintenance and energy conservation. Placards posted in hallways, offices or other areas promote good maintenance. These can be cartoons, drawings, or short slogan-type messages slanted toward enlisting assistance of users, and should give telephone numbers to be called if the heating system is found out of order.

1.5 Keeping As-Built Drawing Records. Every installation has available charts, diagrams, prints of drawings, and other data showing locations of heating system components including piping and ductwork. Maintenance personnel must have these accessible and must know locations of hidden pipes

and fittings, shut-off valves and electrical switches which can be quickly turned off in an emergency. This information should be kept up to date and available on as-built drawings. Alteration during repair should be reported to the Public Works Engineering Department immediately so the drawings can be updated.

1.6 Manufacturers' Instructions. The information in this handbook is presented in as much detail as possible. However, it is impossible to completely cover the many types of heating furnaces, boilers, materials and their component accessories produced by numerous manufacturers for Navy use. Manufacturers' instructions are the best source of information and contain excellent instructions, diagrams, exploded drawings, and photographs that are most helpful in showing how various parts are assembled. If a conflict exists between the manufacturers' instructions and any procedure outlined in this handbook, the manufacturers' instructions are to be followed.

1.7 Maintenance Program. An inspection and maintenance program for heating systems should be developed and maintained in accordance with NAVFAC MO-322, Volumes 1 & 2, Inspection of Shore Facilities. The objective of the Maintenance Program is the prevention or prompt detection of deficiencies or damage and the quick maintenance or repairs in an economical and workable manner. Damaged parts should be replaced or repaired as soon as possible because when one item is not working, the entire system may not function as expected or required. The following should be considered in developing and implementing the maintenance program.

1.7.1 Inspection. Visual and mechanical checking of the condition of facilities should be performed on a regularly scheduled basis as indicated in this handbook. Inspection is required to determine the extent of the maintenance and repair work necessary to ensure proper system operation. The inspections will determine the degree of hazard involved with each structure. The degree of hazard will be used to determine the priority sequence of repair and the extent of repair required. Additional inspections may be necessary under certain circumstances, such as heavy freezes and damage by occupants. Basic checklists and procedural techniques for inspection are included in this handbook.

1.7.2 Maintenance. Maintenance is the day-to-day, periodic, or scheduled work required to preserve or restore a facility to a condition so it can be effectively used for its designed purpose. It includes maintenance work to prevent damage or stop the deterioration of a facility that otherwise would be more costly to restore. Prompt maintenance or repairs in an economical and workable manner is essential for personnel safety and to protect the facility from extensive fire damage. Therefore, the maintenance program should provide for detailed procedures to be performed on schedule.

1.7.3 Repair. Repair is the restoration of a system to a condition that allows it to be used for its designed purpose. The repair may require overhaul, reprocessing, or replacing parts or materials that have deteriorated because of use or time and have not been corrected through maintenance.

welfare balance must be achieved between smoke generation (caused b

Repair can be part of a modernization program. The overall economy of the system and facility served and the requirements for a safe and operable system should be studied before recommending major repairs. Factors to evaluate include, but are not limited to, the following:

a) Replacement cost of the system in relation to the expected life span of the system and the facility and to the cost of repairs.
b) Prompt detection of deficiencies or damage.
c) Operation and maintenance costs of the old versus a new system.
d) Possible obsolescence of the system and the present adequacy of the facility.
e) Present and future availability of maintenance funds.
f) Operational economics and safety hazards of downtime involved in major repair or replacement of facilities.

1.8 Tool Requirement. The heating maintenance mechanic's job consists of performing basic mechanical operations using common tools and materials of the trade. Three principles should be followed in performing the operation:

a) Know what needs to be done.
b) Select the proper tools and materials.
c) Follow approved safety procedures.

1.8.1 Required Tools. The following tools should be available:

a) Standard and Phillips head screwdrivers (various sizes).
b) Pliers: vise grip, slipjoint, needlenose, diagonal, cutting pliers, side cutters.
c) Ball peen hammer.
d) Hack saw and spare blades.
e) 3/8-inch drive socket set and ratchet.
f) Small set of Allen wrenches.
g) Assorted center punches, drift punches, steel chisels.
h) 12-foot measuring tape.
i) Crescent wrenches 4 to 14 inches.
j) Open and box end wrenches 1/4 to 3/4 inch.
k) Files.
l) Pipe wrenches to 24 inches.
m) Small level and square.
n) Pocket knife.
o) Flashlights
p) Grease guns and oilers.
q) Extension cord and inspection lights.
r) Various cleaning tools - brushes, scrapers, etc.
s) Emery cloth.
t) Thermometer.
u) Tubing and pipe cutters.
v) Flaring tool.
w) Small acetylene outfit.
x) Package kit and packing.

y) 1/2-inch drive socket set.
z) Basin wrench.
aa) Strap wrench.

1.9 Safety. Safety is of prime importance in the performance of any maintenance/operation of plumbing equipment. It applies to "safety of the operator" and also for "safety of the system or equipment." There is no exception to the rule that "The safe way is the right way." The following general safety precautions should be observed by the maintenance mechanic working with tools or equipments:

a) Dropping heavy objects on feet or toes is a hazard. This can be avoided by using proper trucking and hoisting equipment. The operator should wear safety shoes with metal tips to protect toes.
b) Back injuries may be caused by attempting to lift heavy objects and by not using arm and leg muscles correctly.
c) Good housekeeping is very important. Keep work area clean. Keep oil and water off the floor.
d) "Mushroom" heads should be ground from chisels and punches as these particles may fly when struck with the hammer causing serious injury to the operator or a bystander.
e) Files should never be used without handles. The tang may injure the hands.
f) Wear goggles when drilling, chips may fly. Eyes should always be protected.
g) Never use a hammer to pound on a screwdriver or use a screwdriver as a punch or chisel.
h) Never stroke a hacksaw over 60 strokes per minute.
i) Never use pliers on parts designed to be used with wrenches.
j) Always pull on a wrench instead of pushing.
k) Avoid pounding on a wrench or the use of "cheater bars" to obtain greater turning torque.
l) Wrenches should always fit snugly. Poorly fitted wrenches will ruin nut and bolt heads. They may slip and cause injury to the service mechanic.
m) Always "crack" valves before opening.
n) Always have good lighting and good ventilation.
o) Never use gasoline or other flammable material when cleaning.
p) Never use carbon tetrachloride for cleaning. Its effects are cumulative in the body.
q) Many parts of plumbing systems are quite fragile. Parts may be ruined by overtightening nuts and bolts, not tightening them in the correct order, or using the wrong size wrench.
r) Always disconnect the electrical circuit or make sure that electrical devices are safe before starting on a job. An electrical short across a ring or wrist watch can cause a severe burn. It is best to remove rings and wrist watches when working on electrical equipment.

s) Many electrical shocks occur when the service technician comes in contact with an electrical current and a ground. Avoid working on any electrical circuit if standing on a damp floor or if one hand is touching a water pipe.

t) Never use oxygen to pressure test lines.

u) In addition to the safety precautions previously mentioned, specific safety requirements for equipment or system conditions will be identified throughout the text where appropriate. Safety precautions, safe maintenance practices, and safety policy are covered in detail in NAVFACINST 5100.11, Command Safety and Health Program. All maintenance personnel should be familiar with the contents of this instruction.

Section 1: SELF-STUDY QUESTIONS

Q1-1 Oily, greasy, and paint-filled rags must be stored for disposal in:

a. Any old box
b. Self-closing metal containers.
c. Your personal locker
d. Standard trash container

Q1-2 When a fire occurs it is very important to:

a. Keep your head
b. Protect the safety of all individuals
c. Notify the fire department
d. Do all of the above and attempt to extinguish it

Q1-3 Keep all combustibles from the immediate areas where fires can be started such as:

a. Welding areas
b. Trash-burning areas
c. Boiler rooms
d. All of the above

Q1-4 Hand tools should never be used which are:

a. Oily and greasy
b. Heavy and cumbersome
c. Checked out to another person
d. Usable only one time

Q1-5 A screw driver should never be used as a:

a. Chisel
b. Punch
c. Pry bar
d. All of the above

Q1-6 Avoid jamming or locking the blade of a hacksaw in the work to prevent possible injury by:

a. Shattering the material
b. Fracturing the handle
c. Flying pieces of broken blade
d. Separation of the locking device

Q1-7 Small pieces of material to be ground or buffed should be:

a. Hand held
b. Held by the foreman
c. Mechanically held by vise grips or similar devices
d. Not buffed at all

Section 2: RESIDENTIAL AND COMMERCIAL GAS FIRED FURNACES

2.1 Fuels

2.1.1 Natural Gas as a Fuel. Natural gas is extracted from beneath the earth's surface. It is a petroleum product comprised essentially of hydrocarbons (molecules containing hydrogen and carbon atoms). Natural gas is actually a mixture of two different gases (methane and ethane). Many natural gases are odorless in their raw form. The distinctive natural gas odor is actually from a powerful odorant called mercaptain, which is added during the refining process. When combustion of natural gas takes place, the following chemical reaction takes place:

$$CH_4 + 2O_2 \longrightarrow CO_2 + 2H_2O \qquad (1)$$

The above chemical notation simply means that 1 cubic ft of methane will react with 2 cubic ft of oxygen from the air. The products formed when this combustion takes place are 1 cubic ft of carbon dioxide and 2 cubic ft of water vapor. In furnaces, it would be very impractical to burn the natural gas in an atmosphere of pure oxygen. Rather, we burn the gas in air, and the oxygen in the air enters into the reaction above. However, only 20 percent of the air is actually oxygen, the remaining 80 percent is nitrogen. Nitrogen is supplied to the combustion as part of the air. It does not enter into the reaction above, but it merely comes along for the ride. The actual reaction which takes place when burning methane in air is:

$$CH_4 + 2O_2 + 8N_2 \longrightarrow CO_2 + 2H_2O + 8N_2 \qquad (2)$$

In order to supply the required 2 cubic ft of oxygen required to completely react with the 1 cubic ft of methane, 10 cubic ft of air must actually be introduced into the flame. Of that air, 80 percent (or 8 cubic ft) does not enter into the reaction. It leaves with the products of combustion. On the average, when 1 cubic ft of natural gas is burned, 1,000 Btu of heat will be produced. Values of 900 to 1,100 Btu/cubic ft are common. The actual amount of heat liberated when a cubic ft of fuel gas is burned is called the heating value of that fuel. Natural gas has a specific gravity of 0.65. This means that a volume of natural gas weighs only 65 percent as much as an equal volume of air. From a safety standpoint, this is quite important. Fuel from a natural gas leak will rise rather than fall. It actually floats in the air, and will become dispersed to a very low, noncombustible concentration. Therefore, it will not settle into a low point in a building where it could cause an explosion.

2.1.2 Liquified Petroleum (LP) Gas as a Fuel. Propane and butane are processed as a by-product of petroleum refining. Unlike natural gas, these gases may be liquified by putting them under pressure. In the liquid state, they are called liquified petroleum gas, usually abbreviated as LP gas or LPG.

The advantage of LP gas is flexibility in handling and storage. A typical LP storage tank is shown in Figure 1. The vapor at the top of the tank is used as the fuel. As the vapor is drawn off, the pressure in the tank tends to decrease, causing the remaining liquid in the tank to boil. Each gallon of liquid which boils will replenish 36 cubic ft of gas.

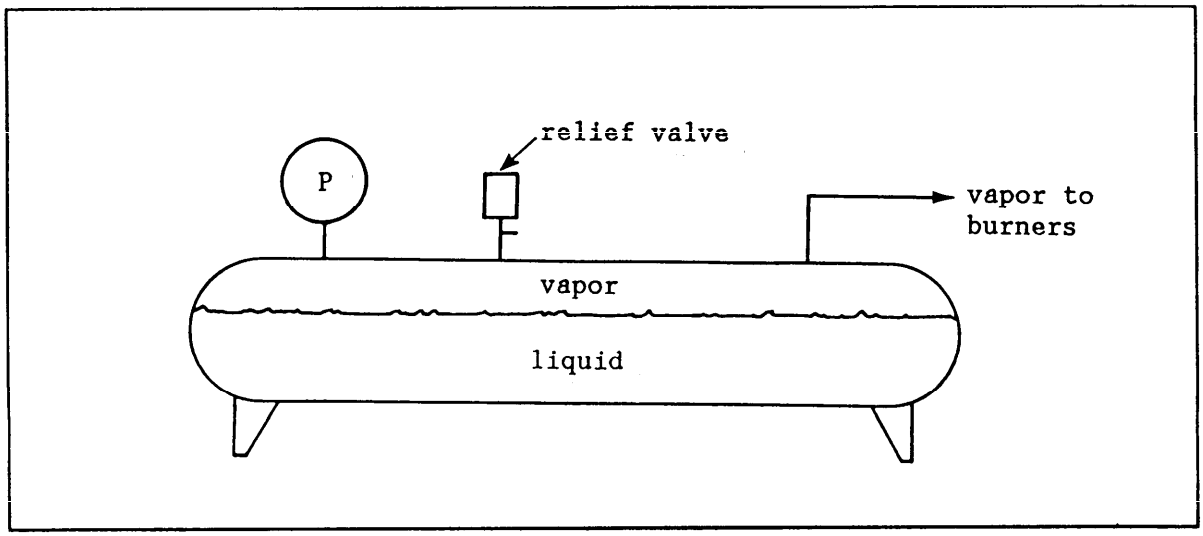

Figure 1
LP Storage Tank

The pressure inside the LP storage tank is dependent on temperature. The pressure-temperature (P-T) relationship for propane and butane gas is shown in Figure 2. The minimum tank pressure required for delivery to the fuel burning equipment is 11 inches of water column, or 0.4 psig. From Figure 2 propane will have sufficient delivery pressure at all normally encountered outside air temperatures. However, butane pressure drops below 0.4 psig when the temperature at which it is stored drops to below 33 degrees F. LP gas is usually a mixture of propane and butane gas. At any temperature, the actual pressure in an LP tank will be somewhere between the pressures for the individual gases shown in Figure 2.

The heating value of LP is considerably higher than that of natural gas. One cubic foot of propane will produce 2,550 Btu when burned. One cubic foot of butane will produce 3,200 Btu. Natural gas burners must be adjusted to burn a smaller volume when being converted for use with LP gas. Otherwise, overfiring and overheating would result.

An important safety consideration in the use of LP gas is the specific gravity of propane and butane. They are each heavier than air (specific gravity higher than 1.00). Gas escaping from any source can settle into a low pocket such as a firebox or a basement, resulting in a potential explosion. Leaks

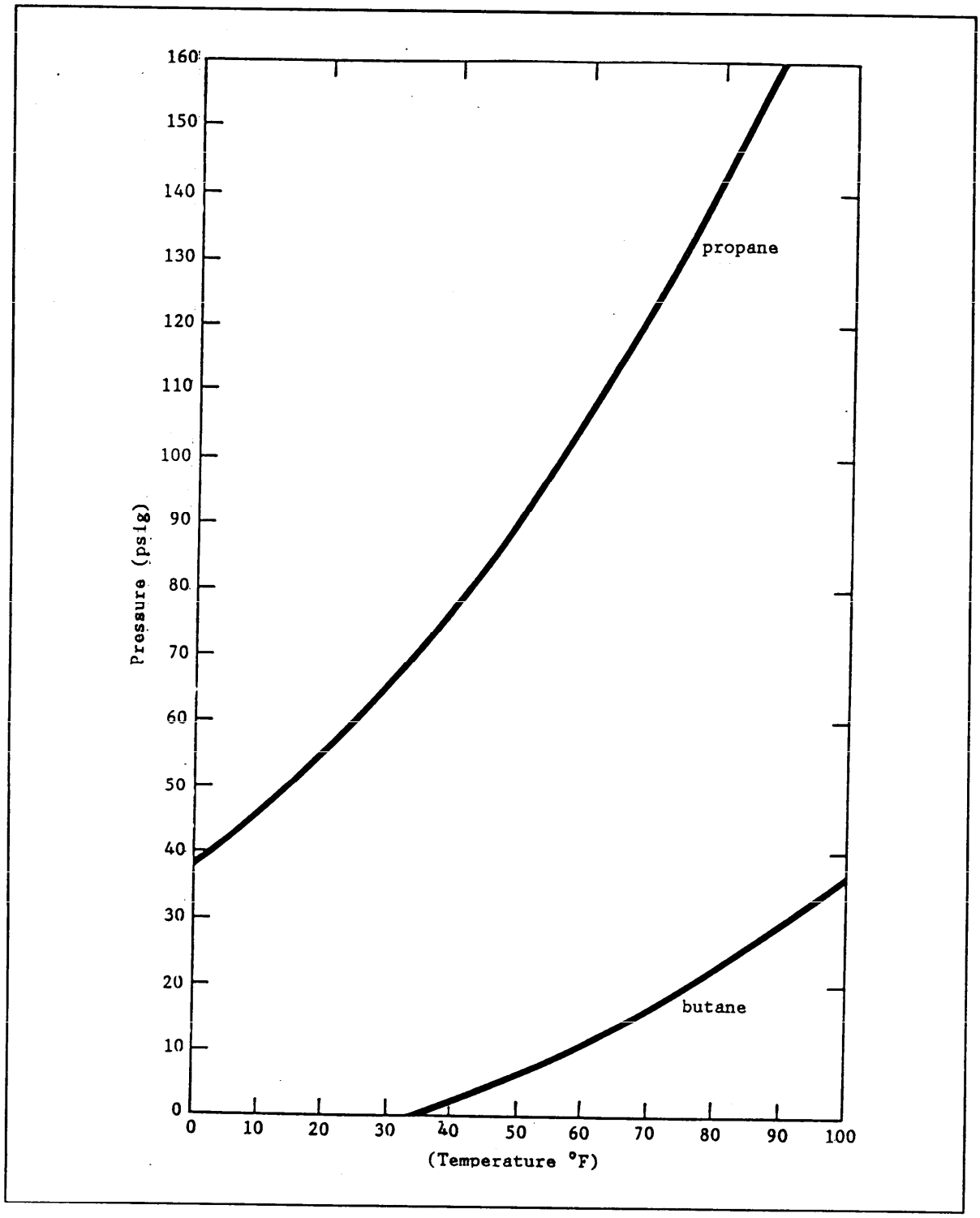

Figure 2
Pressure/Temperature Relationship for Propane and Butane

from LP storage tanks in manufacturing plants have been known to travel hundreds of feet along the ground until a source of ignition was reached. The resulting explosion then involves the entire area engulfed by the LP gas cloud.

2.2 Gas Burning Equipment. In para. 2.1.1, the combustion process for natural gas was described as:

$$CH_4 + 2O_2 + 8N_2 \longrightarrow CO_2 + 2H_2O + 8N_2 \qquad (3)$$

A perfect gas burner will allow this reaction to take place exactly as shown. However, in practice this is impossible. Unless perfect mixing between the gas molecules and the air molecules takes place, there will be some gas molecules that don't find oxygen molecules with which to react. Or, worse yet, there may be some gas molecules which do not react completely. With incomplete combustion, the reaction produces a quantity of carbon monoxide instead of reacting completely to form carbon dioxide.

Carbon monoxide is colorless, odorless, and potentially lethal. We cannot tolerate the potential of producing carbon monoxide in the combustion process.

In order to produce sufficient mixing to assure complete combustion, we introduce more air than is actually required for the reaction. This will insure that every molecule of natural gas will be able to find sufficient molecules of oxygen to allow the reaction to go to completion. The extra air which is introduced is called excess air.

So why not allow unlimited quantities of excess air to enter the combustion process? The answer is that the excess air actually reduces combustion efficiency, even while assuring that complete combustion takes place. Excess air requires that extra oxygen and nitrogen be introduced to the combustion zone. It does not enter into the reaction, but it is heated to the same temperature as the other producers of combustion. This increases the amount of heat which is actually thrown away up the stack (flue gas). Therefore, increasing the quantity of heat which goes up the stack decreases the amount of heat which is available for space heating. A gas burner which has been well designed will produce complete combustion while using the minimum possible quantity of excess air.

2.3 Atmospheric Gas Burners. Practically all domestic and commercial gas burners are of the atmospheric type. That is, primary air is drawn from the atmosphere by the venturi effect of fuel gas. The gas is introduced at a pressure of 3.5 inches (water column) for natural gas, or 11 inches (water column) for LPG. In contrast, some burners, especially in industrial applications, may use fuel at higher pressure, and will force the air to mix with the fuel by using combustion air fans.

Figure 3 shows the cross-section of a typical atmospheric gas burner. Actual designs will vary from one manufacturer to another. Various types are:

a) Drilled port burners are constructed of heavy cast iron. The gas/primary air mixture is released to feed the flame through a series of drilled holes.
b) Slotted port burners are constructed of sheet metal or stainless steel. The mixture is fed through a long slot or series of slots.
c) Inshot burners feed the mixture through a single large opening and impinges the mixture onto a target plate.

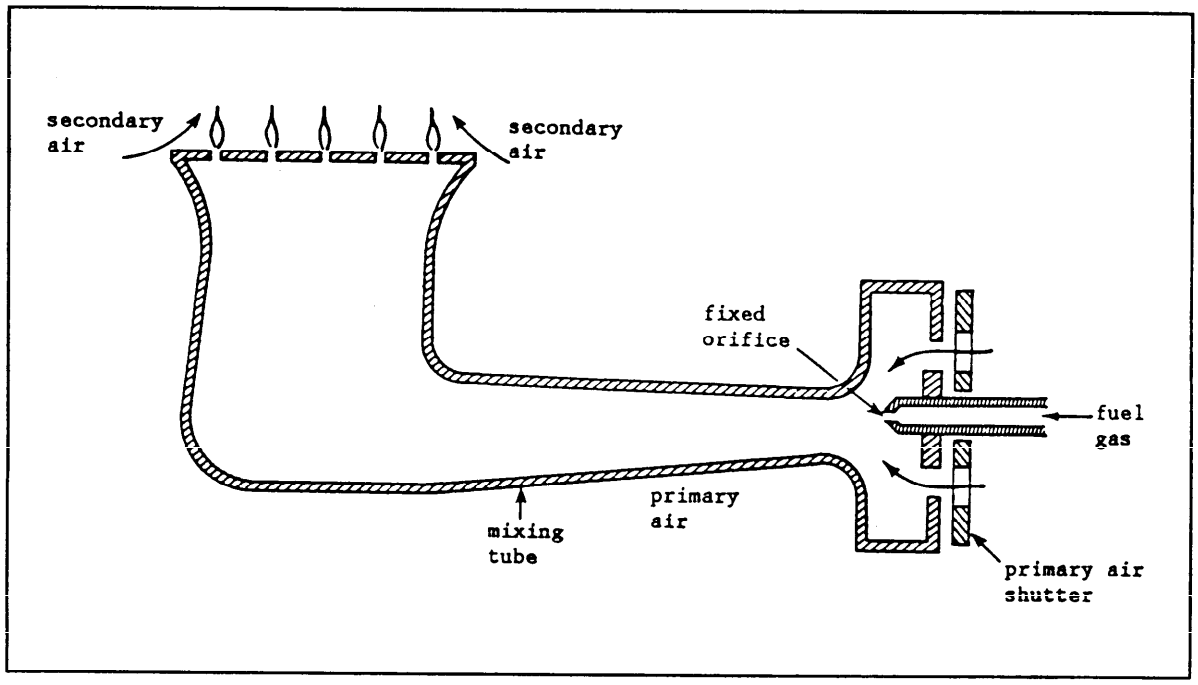

Figure 3
Cross Section of a Typical Atmospheric Gas Burner

Additionally, some designs use adjustable primary air shutters, while others have a fixed opening for primary air. The fixed orifice shown in Figure 4 is usually located on a gas manifold. Two or more burners are supplied with gas from a common manifold as shown in Figure 5. The size of the orifice is critical. It must supply the proper heat input to the burner. The heat input will change if any one of the following three conditions change; the type of fuel, the supply pressure of the fuel gas, or if the physical configuration of the orifice is changed. The convention for identifying the size of the orifice is to determine the size of the drill bit used to make the orifice hole. Table 1 shows the orifice size required for natural gas or propane at normal delivery pressures.

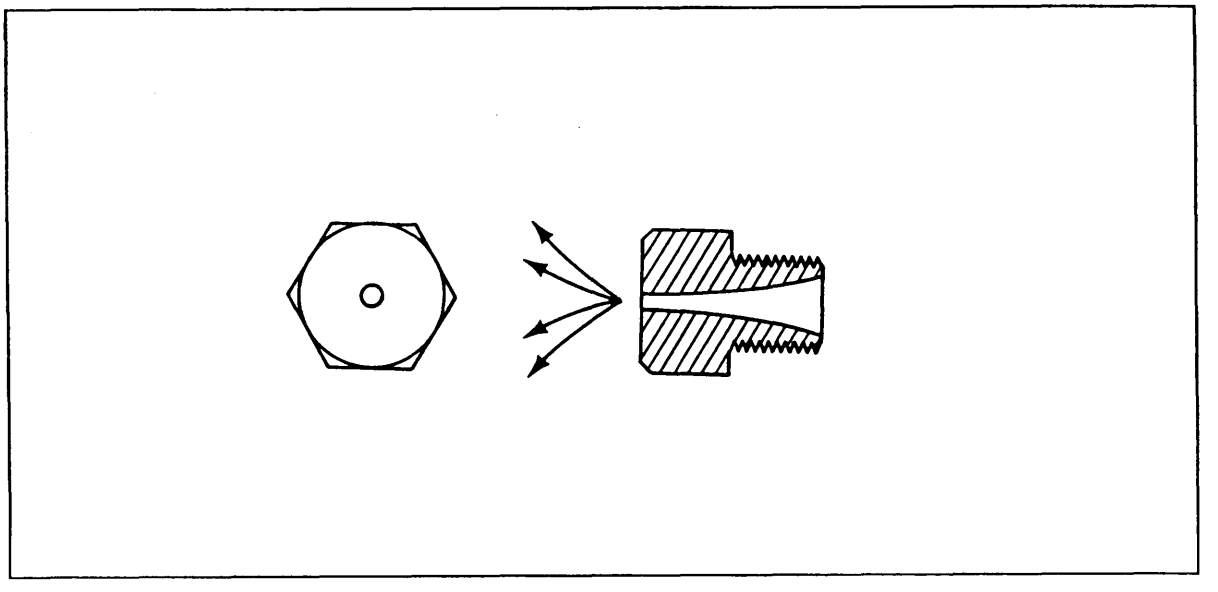

Figure 4
Fixed Orifice for Delivery of Fuel Gas

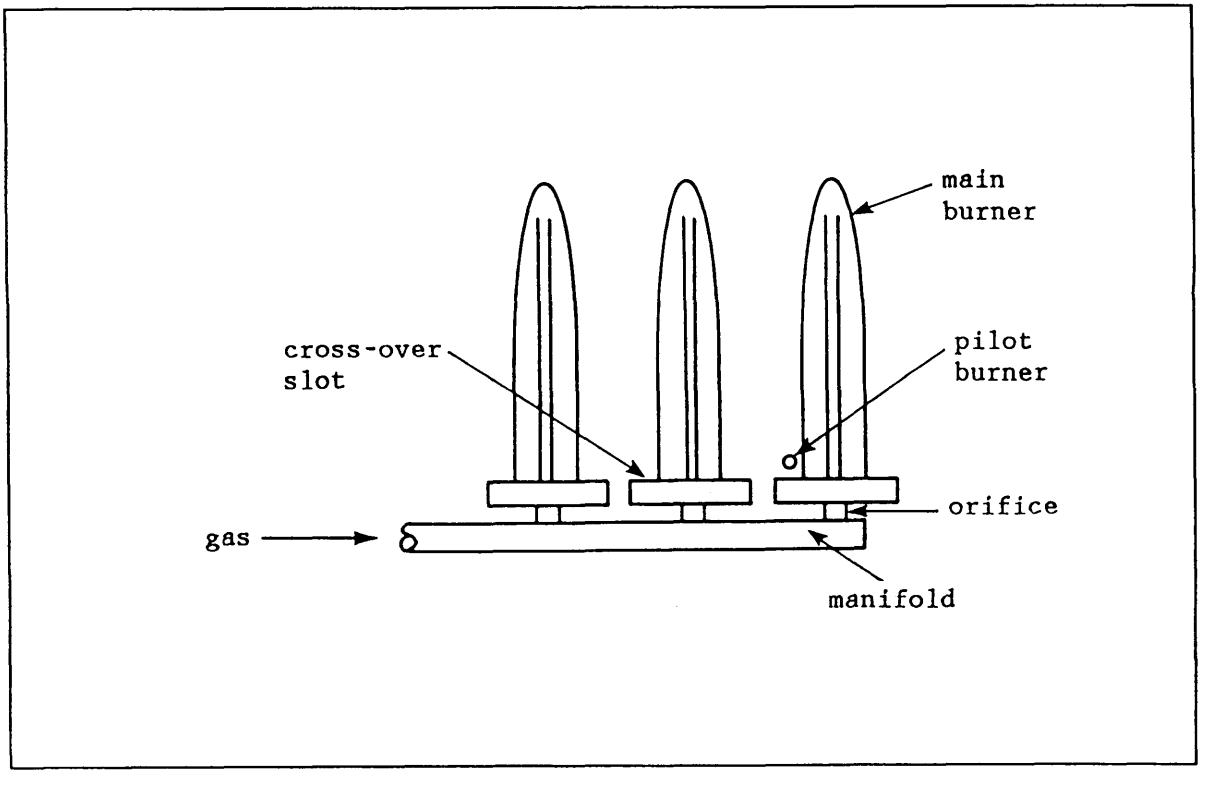

Figure 5
Manifold and Multiple Burner Arrangement

Example: A 100,000 Btu/hr furnace with four burners is to be converted from natural gas to propane. The orifice size must therefore be changed to maintain the same heat input. What size orifices are required for use on propane?

Solution: Each of the burners is rated at 100,000/4 = 25,000 Btu/hr

From Table 1, the orifice size for natural gas should be a number 42. If propane is used, the same Btu rating will be obtained using a number 54 orifice (23,900 Btu/hr).

Table 1
Orifice Capacity Table (1000 Btu/hr)

DRILL SIZE	NATURAL GAS CAPACITY (a) (Btu/hr)	PROPANE CAPACITY (Btu/hr)	BUTANE CAPACITY (b) (Btu/hr)
20	74.0		
22	69.0		
24	63.0		
26	57.0		
28	52.0		
30	47.0		
32	38.5	106.0	117.0
34	35.2	97.0	107.0
36	32.4	89.2	98.8
38	29.4	81.0	89.6
40	27.4	75.4	83.5
42	25.0	68.7	76.2
44	21.1	58.0	64.4
46	18.7	51.5	57.0
48	16.5	45.5	50.3
50	14.0	38.5	42.8
52	11.5	31.7	35.1
54	8.6	23.9	26.3
56	6.2	17.0	18.8
58	5.0	13.8	15.3
60	3.6	12.6	13.8

(a) Based on 1,050 Btu/cubic ft, and 3.5 inch W.C. pressure
(b) Based on 11 inch W.C. pressure

The orifice size is critically matched to the burner. To adjust an atmospheric burner, the orifice size or gas pressure behind the orifice is selected so that the heat input rate matches the burner rating. The primary air shutter is then adjusted so that there is a blue flame.

If the primary air shutter is adjusted badly, the appearance of the flame will be changed. A slight shortage of primary air will cause yellow tips to form on the flame. A severe shortage of primary air will cause the entire flame to turn yellow, except for the small blue inner cone. A shortage of primary air has the following effects:

a) Incomplete combustion, allowing the formation of carbon monoxide.
b) Formation of soot, which is unburned carbon. This soot collects on the furnace surfaces and can eventually interfere with the proper venting of the products of combustion.
c) Poor combustion efficiency, resulting in high fuel costs.

If the combustion air contains dust particles, they will cause orange streaks in the flame. These should not be confused with the yellow tips caused by insufficient primary air. Unless the dust is causing other problems such as plugged burner ports, they are not a cause for concern.

The primary air shutters may also be badly adjusted so that too much air is being admitted into the mixing tube. The symptom observed is a small, hard blue flame which may be lifting off the burner heat. The flame may be noisy and may also cause resonance of the furnace. Resonance is a condition where the resulting noise is similar to that of a bass guitar, and can be quite loud. In some cases of too much primary air, flame instability results. The flame may blow itself out along with the pilot light.

2.4 Light Off. The gas burners described in paras. 2.2 and 2.3 have no capability for reduced capacity. They are either full on or full off. Capacity control is accomplished by a thermostat which switches a gas valve to the fully open position when heat is required. When the space is warm enough, the thermostat causes the gas valve to fully close.

One popular way to ignite the main gas is by the use of a standing pilot flame. That is, a very small gas flame is allowed to burn all the time in a pilot burner. When the main gas valve opens, the main gas is ignited by the standing pilot (see Figure 5). When more than one main burner is to be ignited by a single pilot flame, a crossover or carryover wing is used. It is a slot which allows main gas to cross over all the burners, and be ignited from the common pilot. If the crossover slot becomes blocked or misaligned, it will result in delayed ignition. Delayed ignition occurs when the main gas is not ignited immediately. Gas continues to enter the furnace until a large gas cloud is ignited by the pilot flame. Depending upon the length of the delay, delayed ignition can cause noisy light off or a minor explosion which remains inside the furnace. A dangerous explosion may be caused if sufficient gas is introduced to the furnace prior to ignition.

A blocked cross over may be cleaned with a tool fashioned from a scrap of sheet metal. With the burner off, the sheet metal is worked through the slot to dislodge dust or rust. On light off, another combustion problem may occur. It is called flashback. This occurs when the velocity of the gas/primary air is too low to keep the flame outside the burner head. The flame flashes back into the mixing chamber and burns at the gas orifice. This causes an objectionable noise, as well as incomplete combustion, sooting, and overheating of the orifice. The most common cause for flashback is a low pressure in the main gas supply line. Less common causes are too much primary air, an obstructed or nicked burner orifice, and a damaged or obstructed main burner.

2.5 Pilot Burner. The safety implications of a reliable pilot burner cannot be overemphasized. Before the main gas valve is allowed to open, it must be proved that a pilot flame is available. Most furnaces with a pilot flame use a thermoelectric generator, commonly called a thermocouple, to prove the pilot flame.

The thermocouple operates on the principle that when two dissimilar metals are joined at one end and heated, a small electrical voltage is produced (see Figure 6). The voltage produced depends on the temperature reached at the hot junction. The higher the temperature, the higher the voltage that will be produced. The voltage produced by a common thermocouple is 15 to 30 millivolts. This millivoltage is used to energize an electromagnet which is used in the gas flow control circuit.

Figure 7 shows how a pilot safety valve is used in conjunction with the main gas valve to assure a safe light off. A transformer provides 24 volts to energize a coil in the main gas valve whenever the switch in the room thermostat is closed. However, in order for the main gas to reach the burners, the pilot safety valve must also be open. During normal operation, this valve will always be open, as long as there is a pilot flame. If the pilot flame goes out for any reason, the thermocouple voltage output will drop to zero, and the pilot safety valve will close.

The arrangement shown in Figure 7 will shut off only the main gas in the event of a pilot flame failure. The pilot gas continues to be supplied through the pilot burner. This small quantity of unburned gas is allowed to rise and escape through the flue gas vent to the outside, there is no safety hazard involved, as long as the fuel is natural gas.

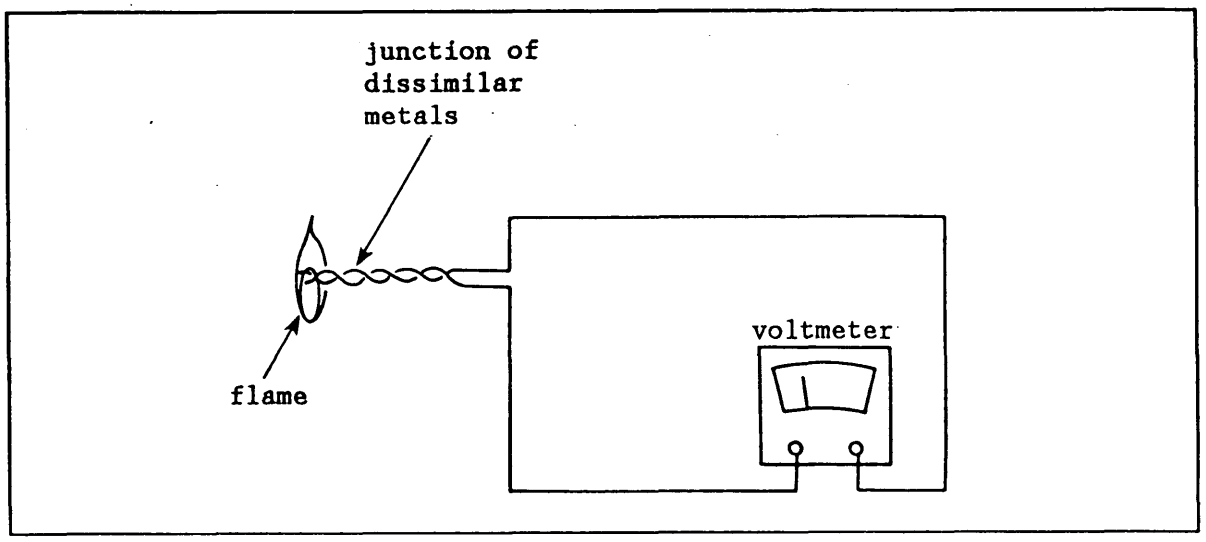

Figure 6
Electrical Voltage Generation Using Two Diodes

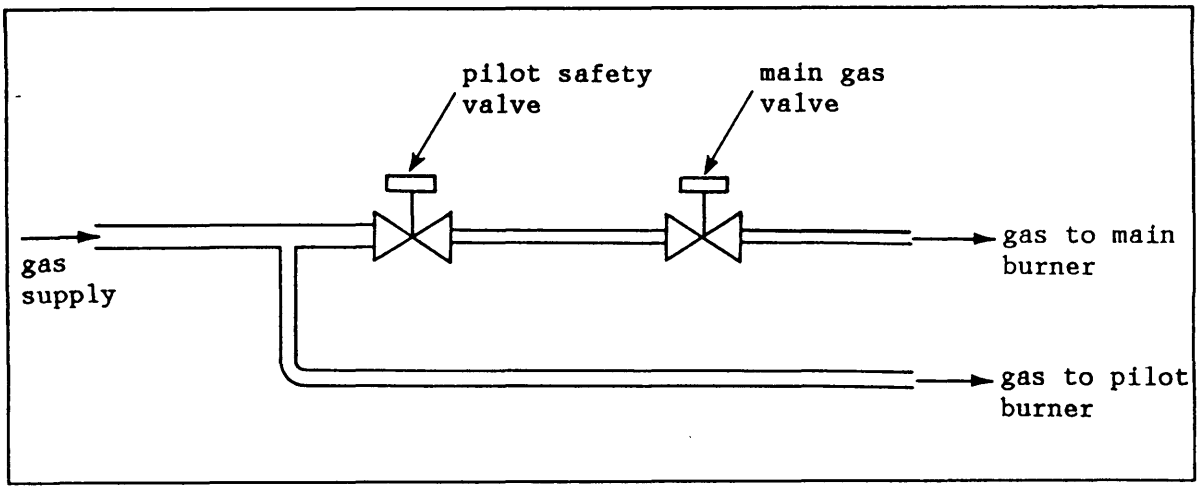

Figure 7
Pilot Safety Valve in Conjunction with Main Gas Valve

For propane systems, this type of system is not permitted. Propane is heavier than air, and the unburned pilot gas would sink, creating a dangerous collection of unburned gas. For all propane systems and most natural gas systems, a 100 percent shut-off is used. When the pilot flame is not proved, not only is the main gas shut down, but the pilot gas is also automatically shut off. Once this happens, the pilot flame must be manually relighted. Installation notes for thermocouple systems:

a) The thermocouple must be screwed into the valve only finger tight, plus one quarter of a turn. If the thermocouple is overtightened, the insulation separating the two thermocouple conductors will be crushed.
b) The end 3/8 to 1/2 inch of the thermocouple should be in the pilot flame. Figure 8 shows the correct and incorrect mounting positions.

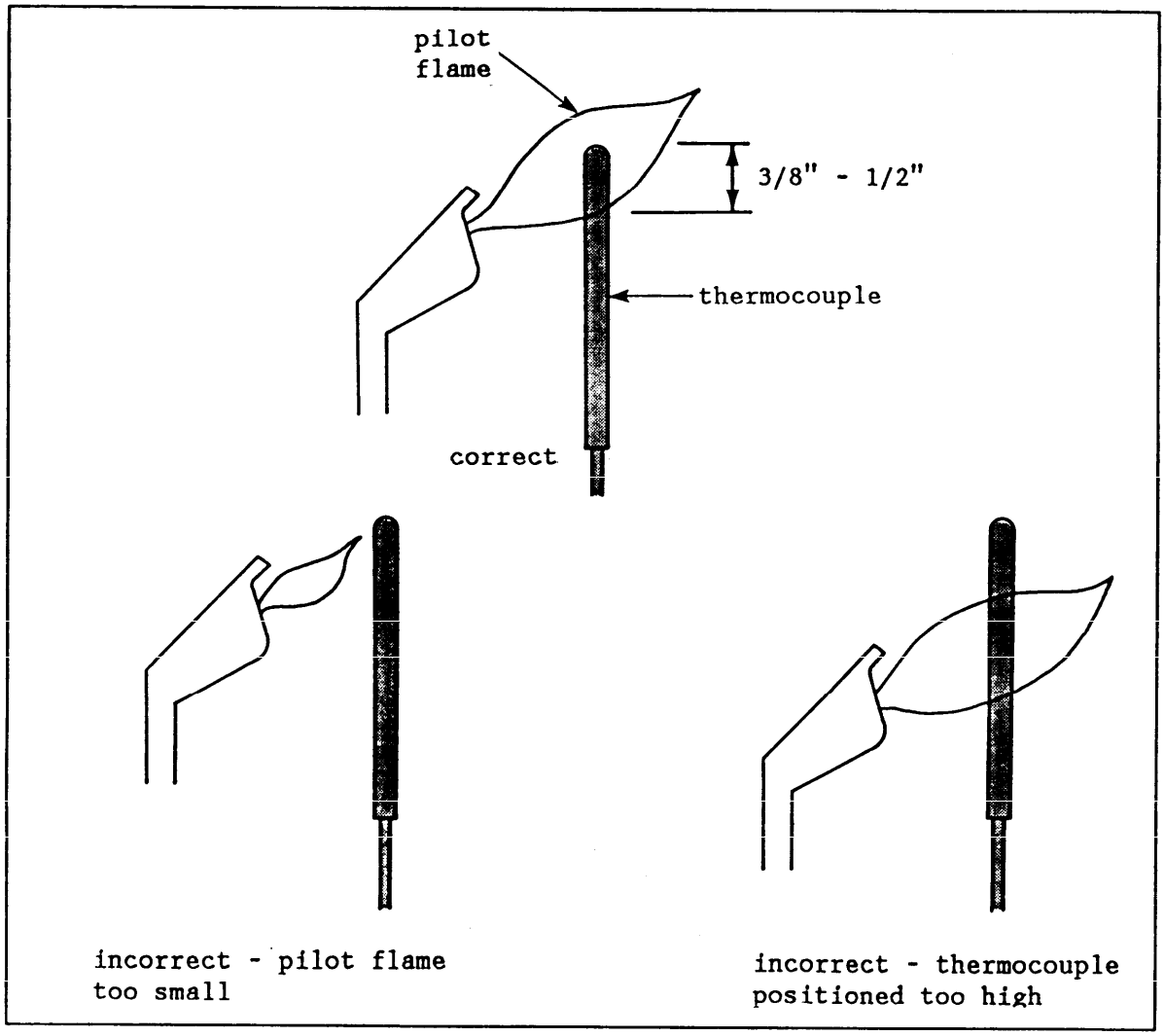

Figure 8
Pilot Light Flame Positions

c) The pilot flame must be large enough to supply sufficient heat to the thermocouple. Where pilot gas is supplied from a pilot safety valve, there is usually an adjustment screw on the valve for the size of the pilot flame. Sometimes the small orifice in the pilot burner (Figure 9) can become obstructed, and must be cleaned by disassembling the pilot burner. The pilot burner gas supply line is normally 1/4-inch aluminum. Older systems using 1/4-inch copper should be changed over to aluminum in order to minimize the potential of orifice blockage due to scaling of the gas line.

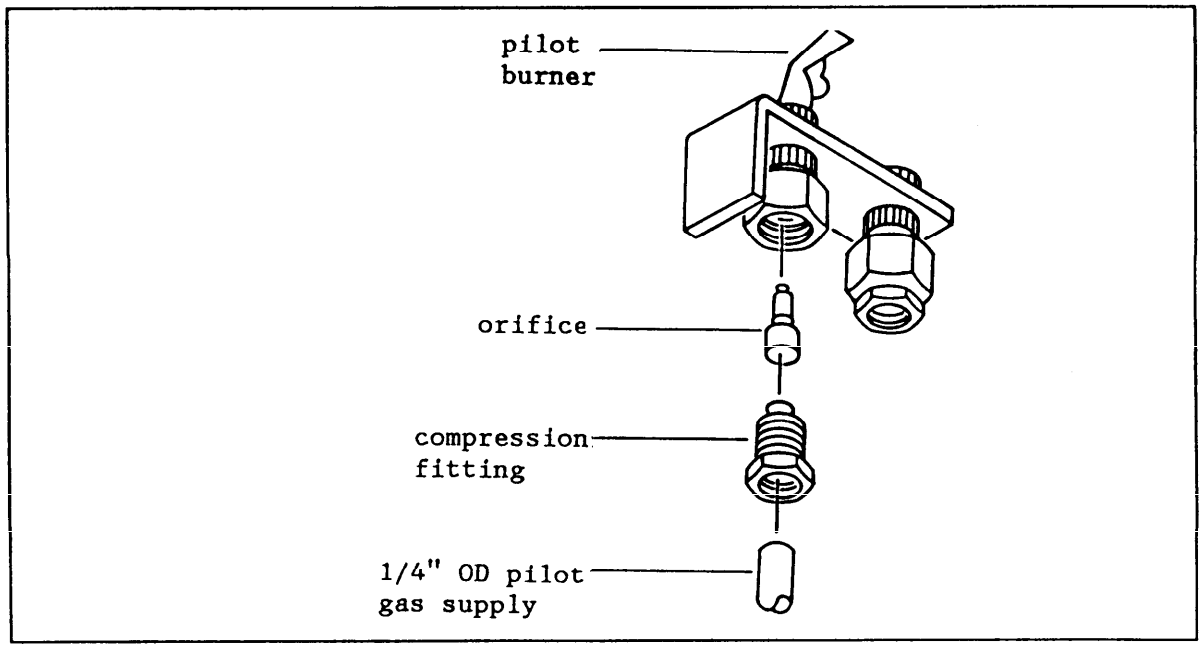

Figure 9
Pilot Burner

2.6 Combination Gas Valve. In the previous sections, separate functions were performed by a pressure regulator, a pilot safety valve, and a main gas valve. A combination gas valve (Figure 10) performs all of these functions. A pressure regulator inside the valve body is adjustable from 2 inches to 5 inches water column gas supply pressure to the manifold. Internal to the valve there are actually two valves in series. One can only be open when the thermocouple proves a pilot flame. The other opens when the thermostat completes a control voltage circuit.

But if that were all that were included, it would be impossible to light off the system. The valve will not supply gas to the pilot burner until there is a proven pilot flame. And there can be no pilot flame until there is a supply

of gas to the burner! In order to solve this dilemma, a manual override for pilot gas is supplied as part of the valve. Pushing down on the red button will allow gas to be supplied to the pilot burner for as long as the button remains depressed. The pilot flame must be lit while holding down this red button. After one minute, the pilot flame will have produced sufficient heat for the thermocouple to provide 18 millivolts or more. An electromagnet in the gas valve builds sufficient strength to hold open the valve, and the red button may then be released.

Valves of different design may use a red button, pushing down on the selector switch, or any other method of manually holding the valve open may be used. The selector switch has three positions, "on," "off," and "pilot." While lighting the pilot flame, the selector switch is turned to "pilot." Once the pilot flame has been established, the selector switch is turned to "on." This then allows main gas to be supplied to the burner whenever the thermostat calls for heating.

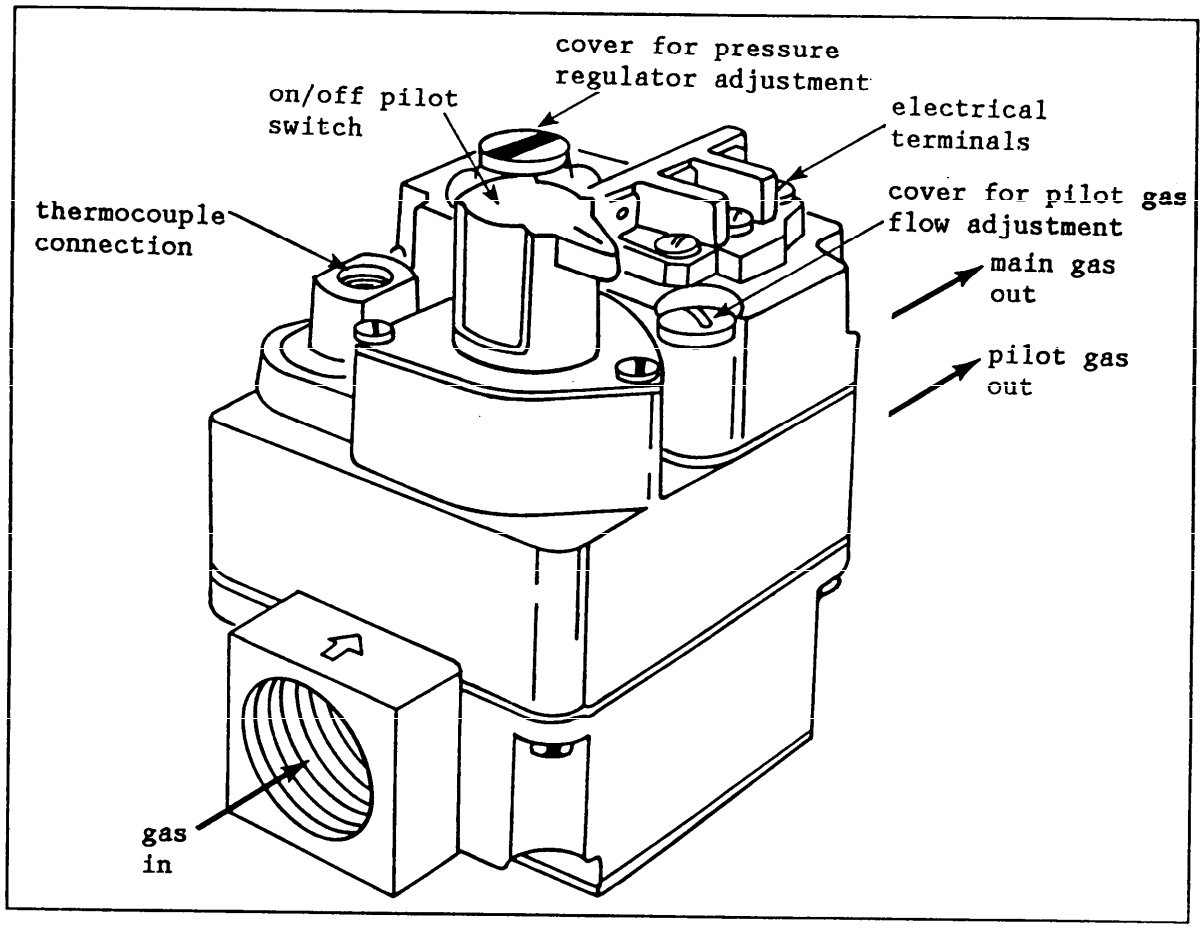

Figure 10
Combination Gas Valve

2.7 Bimetal Type Pilot. Figure 11 shows another type of device used to prove a pilot flame. The pilot flame is allowed to impinge directly onto a bimetal element. When heated sufficiently, the bimetal element bends, causing a switch to close. Otherwise, the switch remains open. When this type of device is used, it is wired in series with a simple 24-volt single function automatic gas valve.

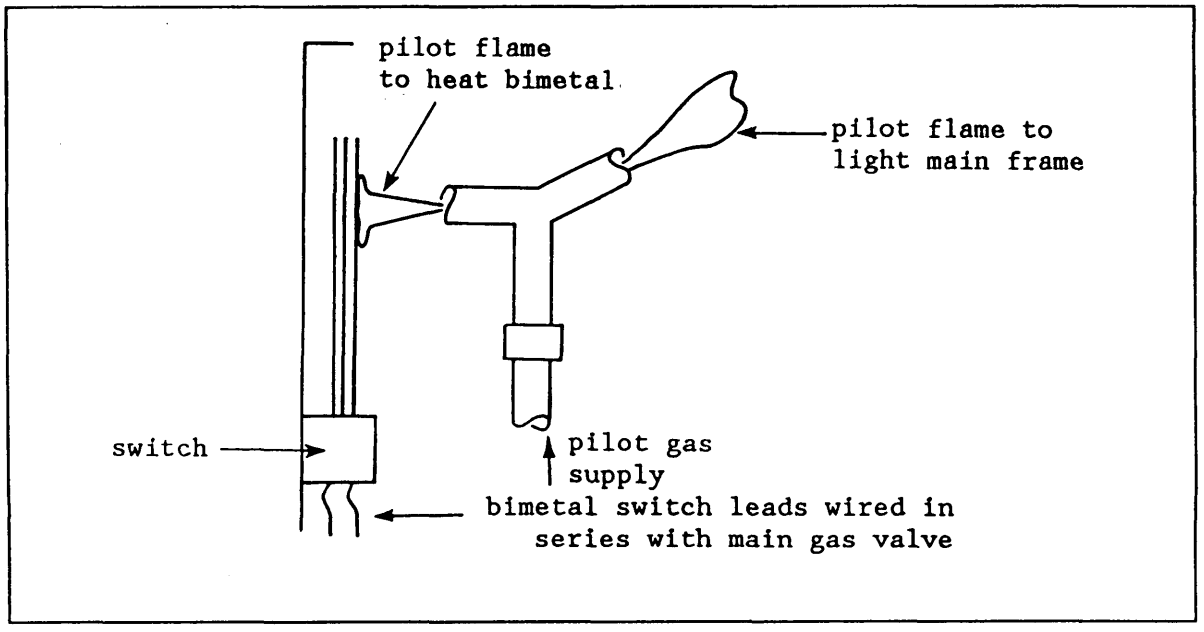

Figure 11
Bimetal Pilot Supply

2.8 Automatic Reignition. The simple two wire bimetal described above served only one function. With no pilot flame, the circuit to the main gas valve opens. With no pilot flame, the switch remains open until somebody physically relights the pilot.

Figure 12 shows a slightly more sophisticated bimetal safety switch which incorporates a third wire and a glow coil. This type of arrangement is frequently found on rooftop furnaces where the pilot flame is more susceptible to being blown out by the wind. Whenever the pilot flame goes out, the flow coil is energized, thus relighting the pilot flame. When the flame is reestablished, the glow coil is deenergized and the gas valve circuit through the pilot safety is once again completed.

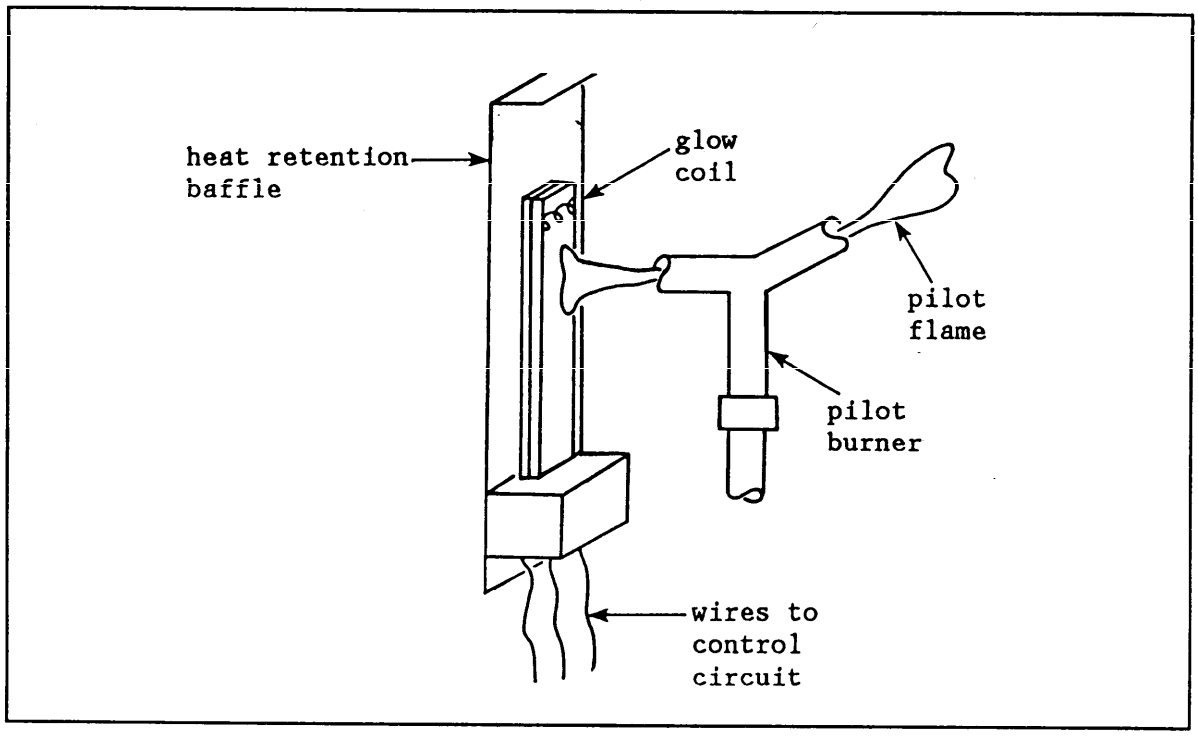

Figure 12
Bimetal Pilot Glow Coil

2.9 Low Gas Pressure Cutout. Figure 13 shows a device which senses gas pressure, and opens a switch should the gas pressure fall below the set point. This device is used in conjunction with the automatic reignition system. If the pilot has gone out because the gas supply to the heater has been turned off, the reignitor glow coil would continue to attempt to relight the pilot until it burned out. The low gas pressure switch is wired in series with the glow coil circuit. Automatic reignition is then not even attempted unless there is sufficient gas pressure available.

2.10 Heat Exchanger. In order to get the heat from combustion out of the furnace and into the room, a heat exchanger is used between the heat from combustion and the room air (Figure 14). The heat exchanger may be constructed from cast iron, stamped steel, or ceramic coated steel. Various shapes are used to make the path of travel for the flue gas more tortuous, so it has more time to allow its heat to transfer to the room air. The design of the heat exchanger is the key to furnace efficiency. The more heat transfer surface area provided, the less heat will be wasted up the stack. Most residential and commercial furnaces are provided with a heat exchanger which will transfer 80 percent of the heat input into the room air. The heat exchanger is the heart of the furnace, and the most expensive component. They are rarely repaired or replaced. When they fail, it is usually time to replace the entire furnace.

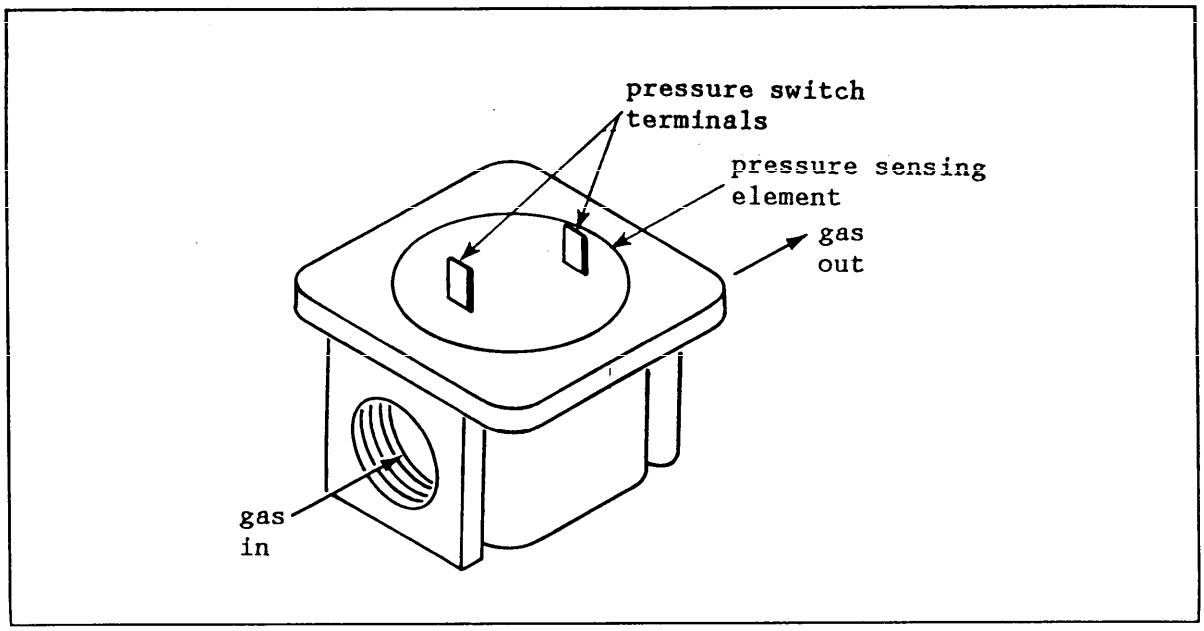

Figure 13
Low Gas Pressure Cutout

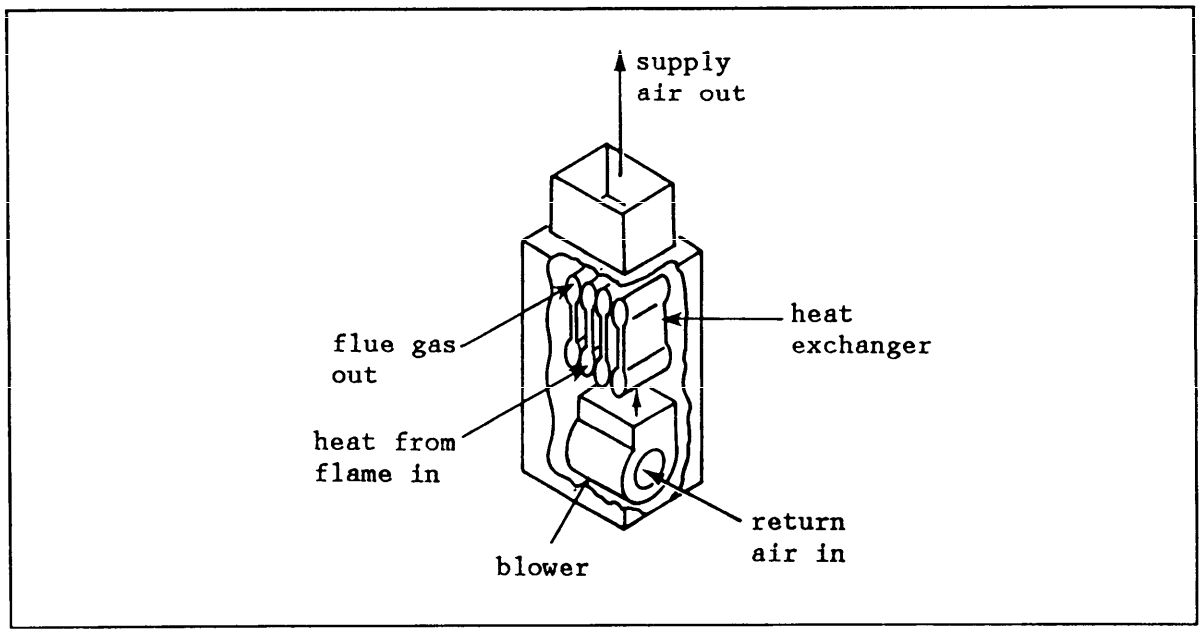

Figure 14
Heat Exchanger and Furnace Fan

2.11 Furnace Fan. The furnace fan shown in Figure 14 draws air from the heated space at room temperature. As the air moves over the heat exchanger, it will experience a temperature rise of between 45 and 100 degrees F. Many fans have two- or three-speed motors. At the higher fan speeds, the temperature rise of the air is lower and the furnace efficiency is improved. However, if the room air flow is too high, the low discharge air temperature may be perceived as a draft by the room occupants. Also, the increased fan operating cost can offset the decreased gas consumption.

The relationship of the fan to the heat exchanger may be as shown in Figure 14. This is called a vertical upflow furnace or just upflow, and is the most common arrangement for residential applications.

Figure 15 shows a vertical downflow furnace, a horizontal furnace and an upflow. The downflow furnaces are used to discharge into under-the-floor ductwork. The horizontal furnace is commonly found in attic installations and on rooftop furnaces. The furnaces may also be blow-through or draw-through arrangements. That is, the fan may blow through the heat exchanger, or it may draw the room air through the heat exchanger. From a safety standpoint, blow-through units are preferable.

If a hole develops in the heat exchanger due to corrosion or any other reason, a draw-through unit will be more likely to draw the products of combustion into the room air. The fan (or furnace blower as it is sometimes called) may be either belt-drive or direct-drive. Both types are shown in Figure 16. The direct-drive blower and motor will operate at 1,075 rpm. The belt-drive blower motor will be 1,750 rpm, and then reduced to 1,075 by using a large blower pulley and a smaller motor pulley. Many blower motors, especially those which are also used for air conditioning, will have three or four different speeds available. On multispeed motors, the operating speed may be changed by choosing which coil in the motor is connected into the circuit. Or, on heating plus cooling systems, the fan will be automatically switched to the higher speed when the thermostat calls for cooling.

Fans are used on most furnaces, except some small room space heaters and very old central heating furnaces. These are referred to as gravity type furnaces because they rely on the effects of natural convection to move the air around the occupied space.

2.11.1 Fan Switch. In the normal furnace operating sequence, the gas valve is opened by the room thermostat. Then, only after the heat exchanger has been sufficiently heated, does the fan turn on. When the room is satisfied, the thermostat causes the gas valve to close. Then, after another time delay, the fan is allowed to turn off. These delays in fan operation are accomplished by the use of a fan switch. The delay in turning the fan on is to prevent blowing uncomfortably cool air onto the occupants on each furnace start up. The delay in turning the fan off is to increase furnace efficiency. Once the gas has been burned to heat up the heat exchanger, it makes sense to run the fan for an extra minute or two to capture that heat.

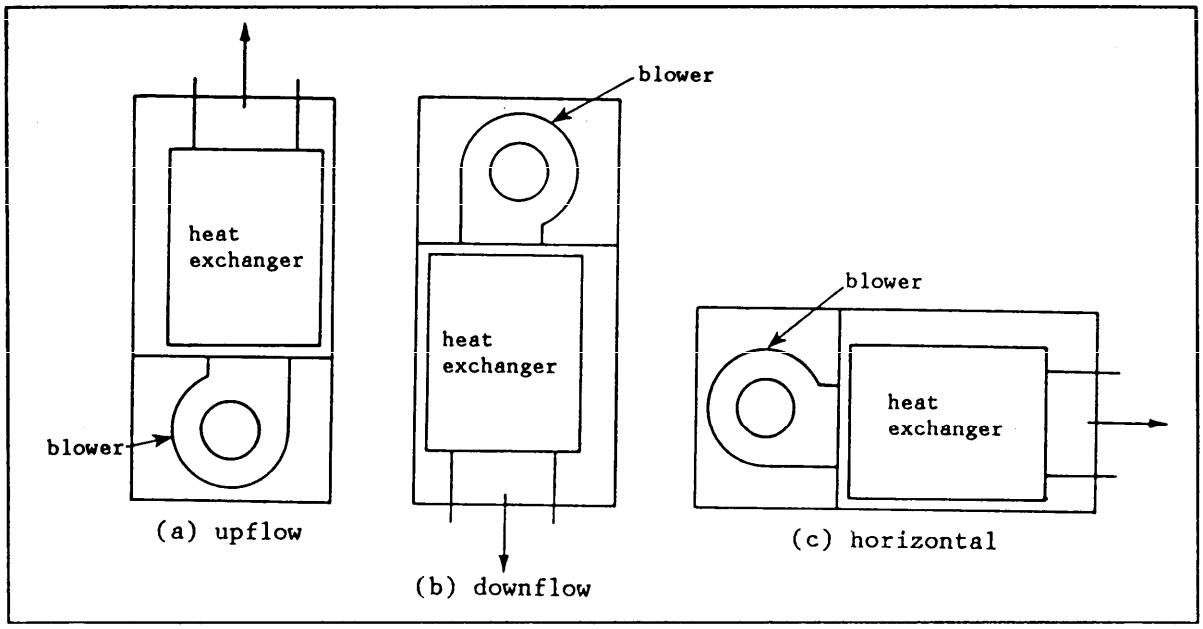

Figure 15
Furnace Arrangements

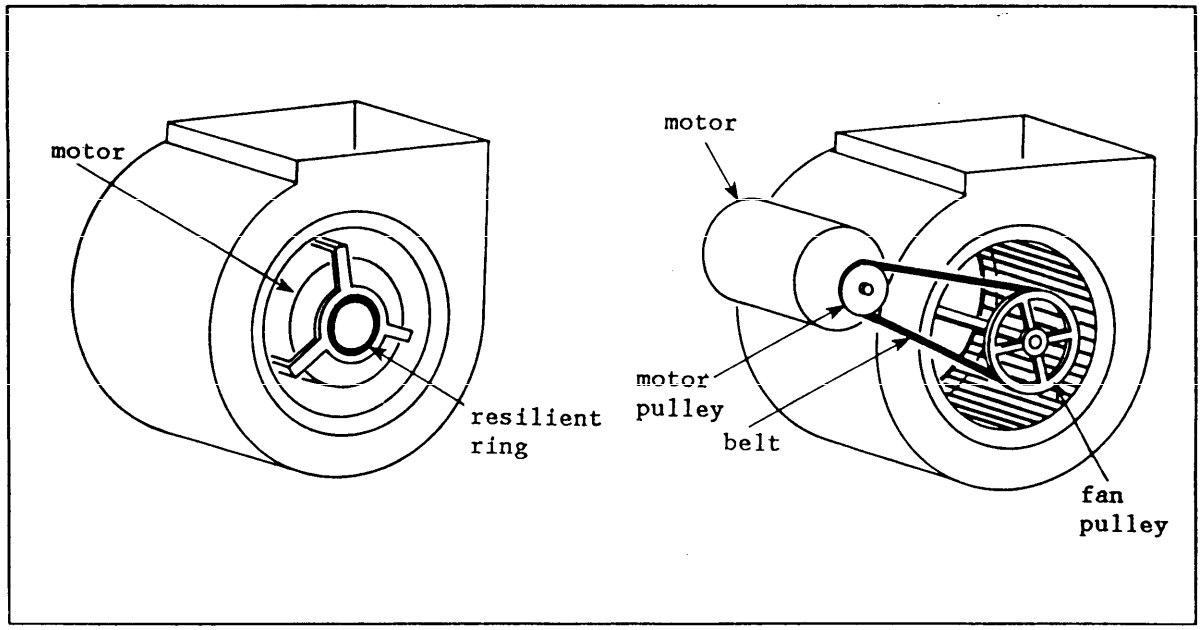

Figure 16
Direct Drive and Belt Driven Fans

Several types of fan switches are shown in Figure 17. Each of them senses the temperature of the air as it passes through the heat exchanger. There are two set points on the switch. Typically, the switch will close, turning on the fan when the bonnet temperature reaches 120 to 130 degrees F. The switch will open, turning off the fan when the bonnet temperature reaches 100 to 110 degrees F.

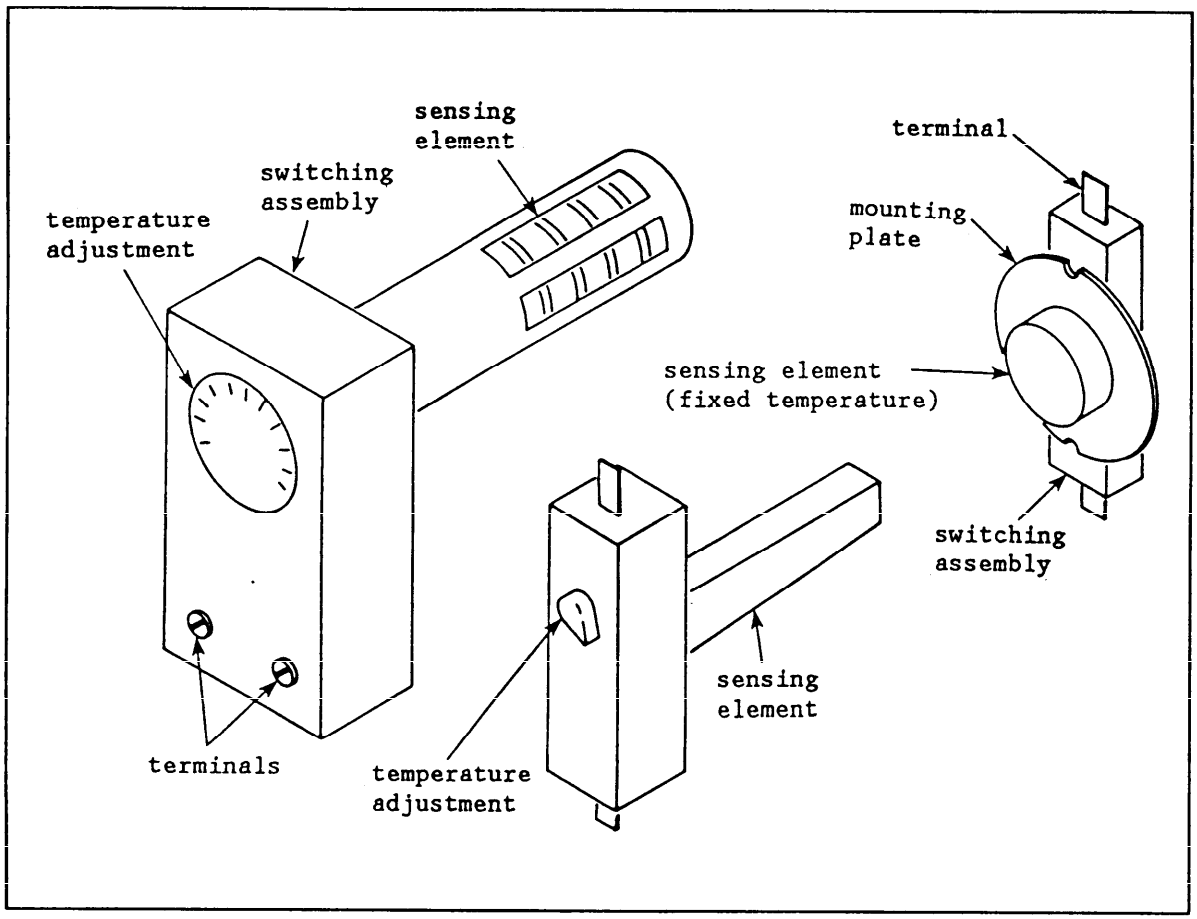

Figure 17
Fan Safety Cutoff Switches

For downflow furnaces, there is a peculiar problem in finding a suitable location for the temperature sensing fan switch. If the switch were to be located downstream from the heat exchanger, it would never turn the fan on. This is because before the fan comes on, the heat from the heat exchanger rises, and would not be sensed by the fan switch (the furnace could overheat). If the fan switch were to be located before the heat exchanger, it would turn the fan on. But as soon as it did, it would sense the cool room air returning to the furnace, and promptly turn the fan back off. In order to solve this dilemma, downflow furnaces use the type of time delay fan switch shown in Figure 18. Instead of trying to sense temperature to control the fan, this

switch uses a fixed-time delay. A schematic cutaway of the inside of the time delay fan switch is shown in Figure 19. It consists of a heater element and a bimetal switch. The heater element is nothing more than a 24-volt resistor. It is energized whenever the room thermostat calls for heat. While the gas valve opens immediately, it takes about one minute for the heater element to build up heat. When sufficient heat from the resistor reaches the bimetal element, it warps, closing the 120-volt fan switch. On shut-down, when the thermostat opens, the heater element is deenergized. After two minutes, it cools sufficiently for the bimetal switch to return to its original position, turning the fan off. Time delay relay switches are used in all the downflow and horizontal furnaces, and in some upflow furnaces.

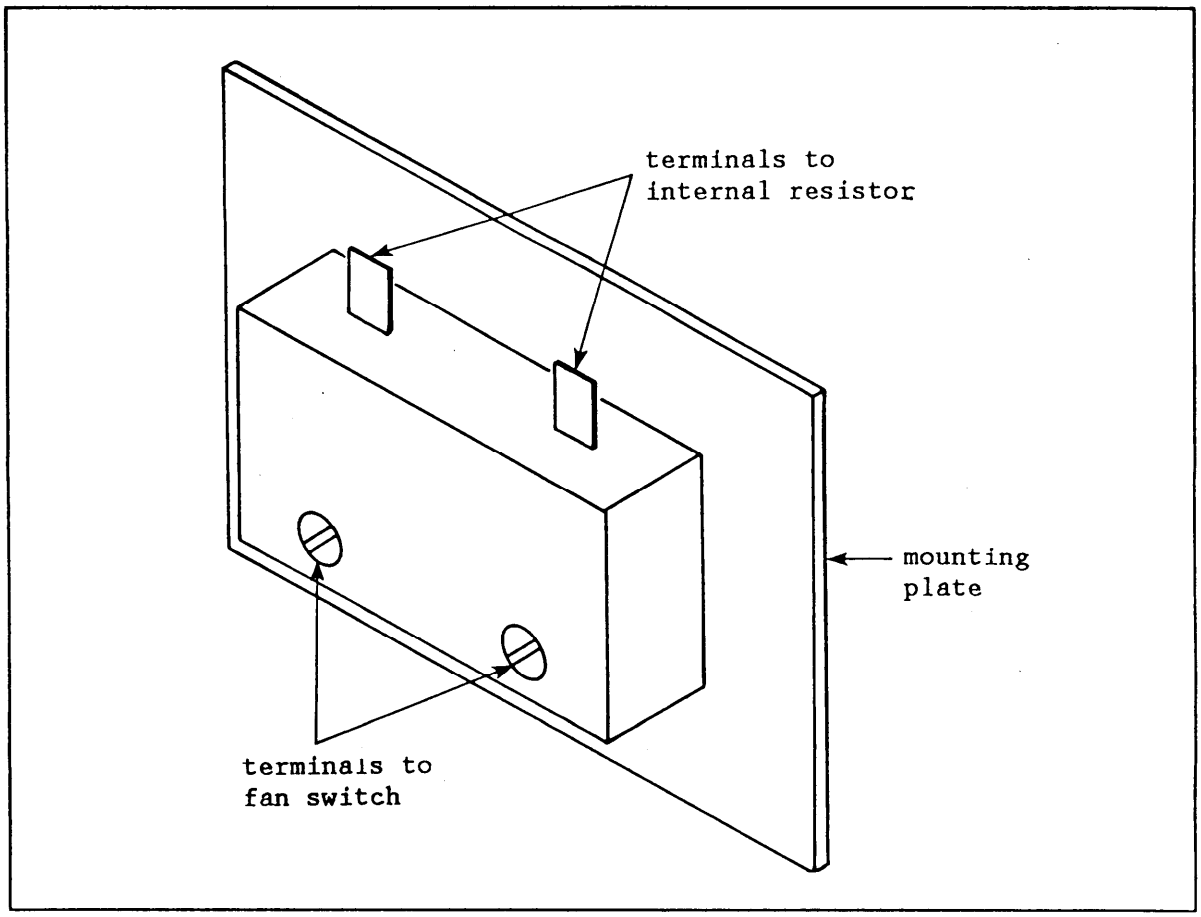

Figure 18
Time Delay Fan Switch

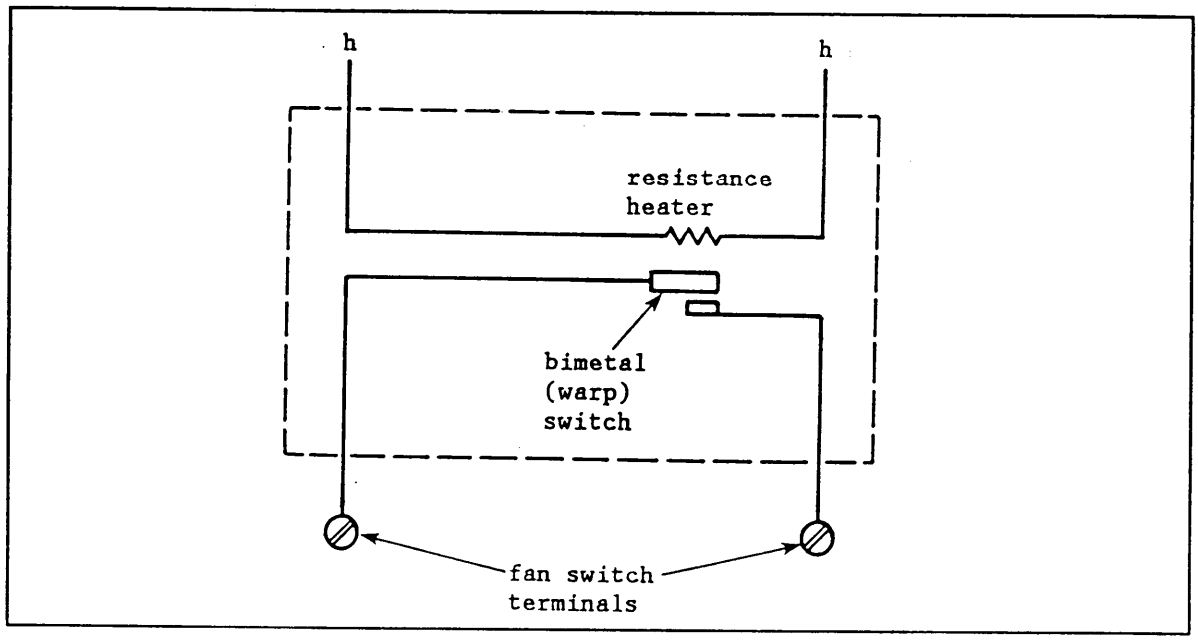

Figure 19
Internals of Time Delay Fan Switch

2.12 Limit Switches. The normal discharge temperature of the air from the furnace is below 140 degrees F. There are several abnormal situations which can cause this temperature to be higher. Therefore, a temperature switch is provided to sense bonnet temperature and shut off the gas valve if the bonnet temperature reaches 190 degrees F. These switches, called limit switches, may have either a fixed set point which will be written on the switch, or an adjustable cutout temperature. All limit switches will have a fixed differential. That is, the switch will reclose at a temperature of 15 to 30 degrees F lower than the temperature at which it opened.

Because the limit switch and the fan switch both sense the same temperature, they are sometimes combined into a single unit as in Figure 20. This is called a combination fan/limit switch. There is only one temperature sensing element, but there are two separate switches inside. There are three different set points on the combination fan/limit. The highest set point is the cutout temperature for the limit. The other two temperatures control the operation of the fan.

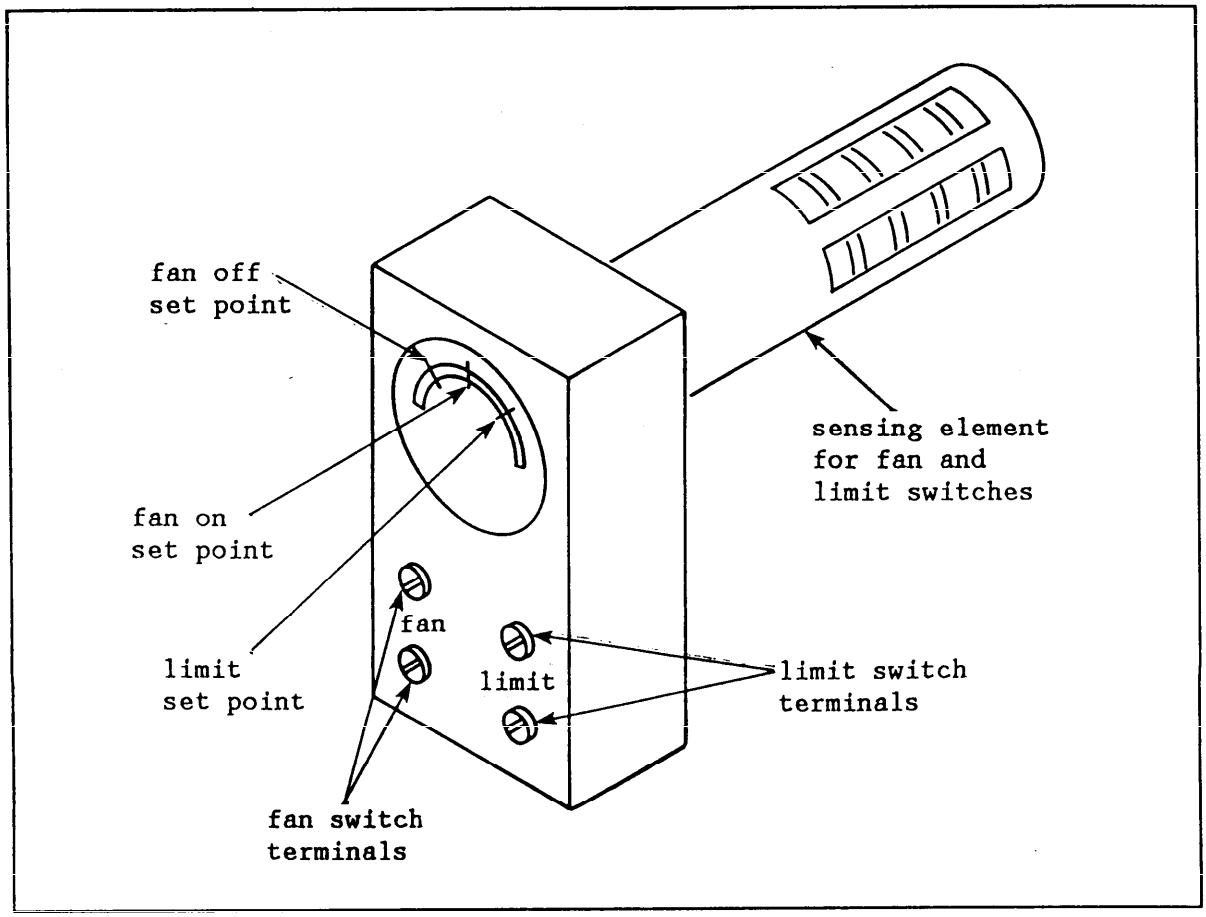

Figure 20
Combination Fan Limit Switch

Under normal circumstances, the limit switch will not open during the entire life of the furnace. If the safety cutout of the limit switch is required, it will probably be caused either by loss of airflow or overfiring of the burner. Loss of airflow may be due to any of the following reasons:

a) The fan switch is defective and has not closed its switch.
b) The blower motor has failed.
c) The air filters are extremely dirty, blocking the airflow.
d) A duct has collapsed or otherwise become blocked.
e) On a direct-drive blower, the set screw attaching the blower to the motor shaft has loosened.
f) On a belt-drive blower, the belt is slipping or has broken.

Overfiring, if it occurs, would most likely be due to one of the following reasons:

a) The wrong orifices have been installed for the fuel gas being used (most likely on new installations).
b) The fuel supply pressure is too high.
c) The orifice has become enlarged or is missing.

2.13 Millivoltage Systems. On gravity systems (heaters using no fan), the control system is different from the 24-volt systems discussed to this point. The heart of the millivolt system is the pilot generator or powerpile. Figure 21 shows schematically what a pilot generator does. The end of the pilot generator is positioned in the pilot flame as if it were a thermocouple. But it is actually a number of thermocouples, wired together in series to provide a much higher voltage than a single thermocouple. Where a standard thermocouple might normally produce 18 to 25 millivolts, pilot generators will produce between 250 and 1,000 millivolts (remember, 1,000 millivolts is still only one volt). This millivoltage is the only electrical power source available, and is used to provide the power through the thermostat, limit switch, and gas valve.

The pilot generator shown in Figure 22 is different in appearance from the thermocouple in several ways. The end of the pilot generator is physically larger than the end of the thermocouple. The voltage is transmitted over two wires, protected by metal shielding. The end of the pilot generator has normal wire terminations rather than the screw in arrangement used with the thermocouple. The thermostat used in the millivoltage system is also different from the thermostat used in a standard 24-volt system. A 24-volt thermostat usually contains a small resistor called a heat anticipator. Its function is discussed in the section. A millivoltage thermostat cannot allow this added electrical resistance, as there is already precious little voltage available to open the gas valve.

And, of course, the millivoltage gas valve is going to be very different from the 24-volt gas valve. The millivoltage valve will be a diaphragm type valve, shown schematically in Figure 23. When the valve is closed, there is inlet gas pressure available on both the top and the bottom of the diaphragm. In fact, the area of the top of the diaphragm which "sees" the gas pressure is larger than the area on the bottom. Therefore, the gas pressure actually tends to help the small spring hold the valve closed. When the room thermostat closes, the millivoltage from the pilot generator is supplied to the coil, creating a magnetic field. The top of the small pilot valve is pulled to the coil. The passage from the gas inlet is shut off, while the trapped gas pressure above the diaphragm is allowed to bleed off through the vent tube (where it is routed to be burned off by the pilot flame). This type of diaphragm valve is sometimes used in 24-volt systems, but it is always used in automatic millivoltage systems.

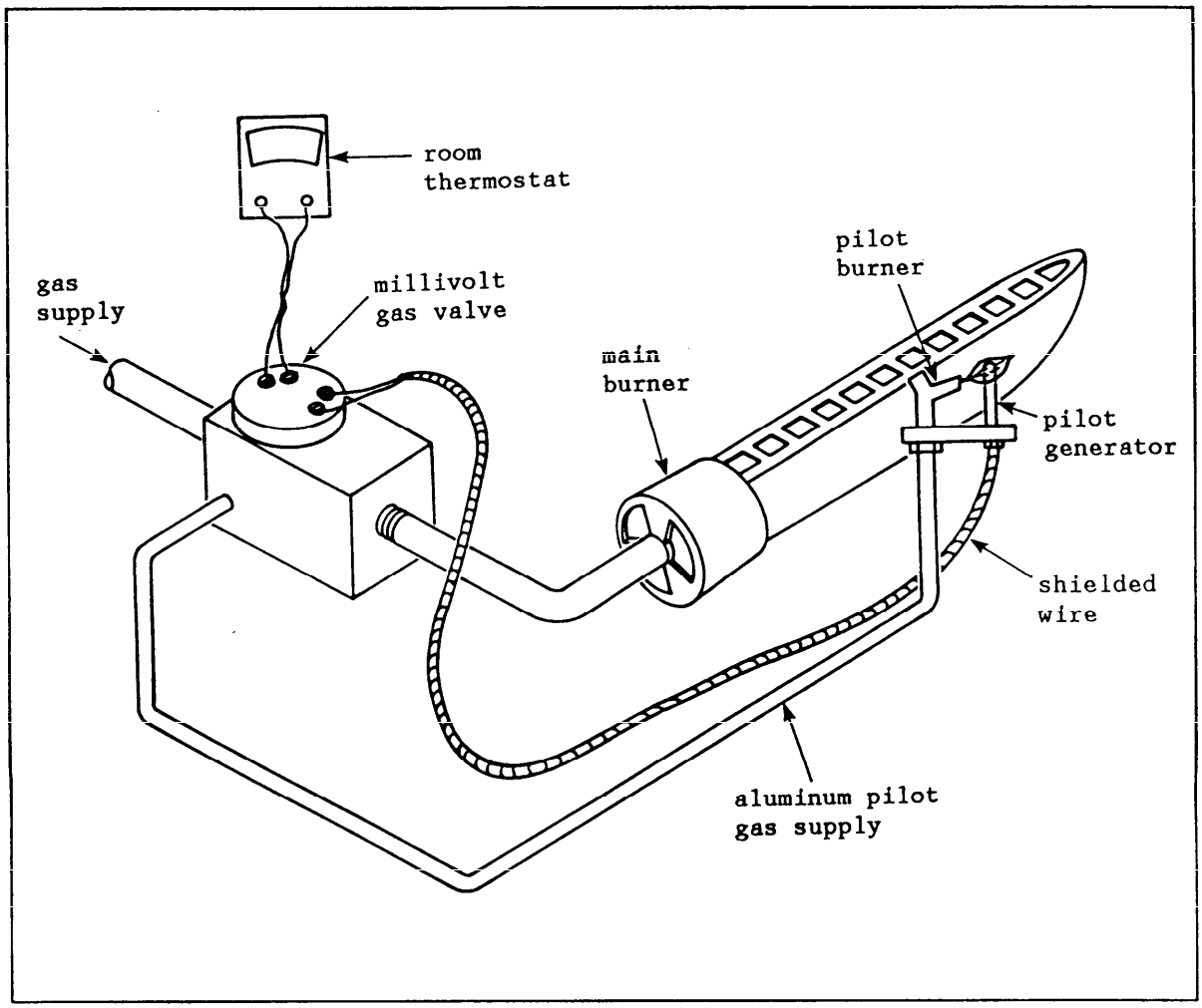

Figure 21
Millivolt Pilot Generator System

2.13.1 Pilot Relay. The pilot relay is commonly called a thermopilot relay, although thermopilot is actually a registered trademark of General Controls. The pilot relay uses a millivoltage signal from a pilot generator in order to open and close a switch within the relay. This switch is then wired in series with the solenoid coil in a 24-volt valve. Plug-in types of pilot relays are available. The plugs on the relay fit directly into the top of a specially designed gas valve, thus completing the wiring of the gas valve solenoid and the pilot safety relay switch.

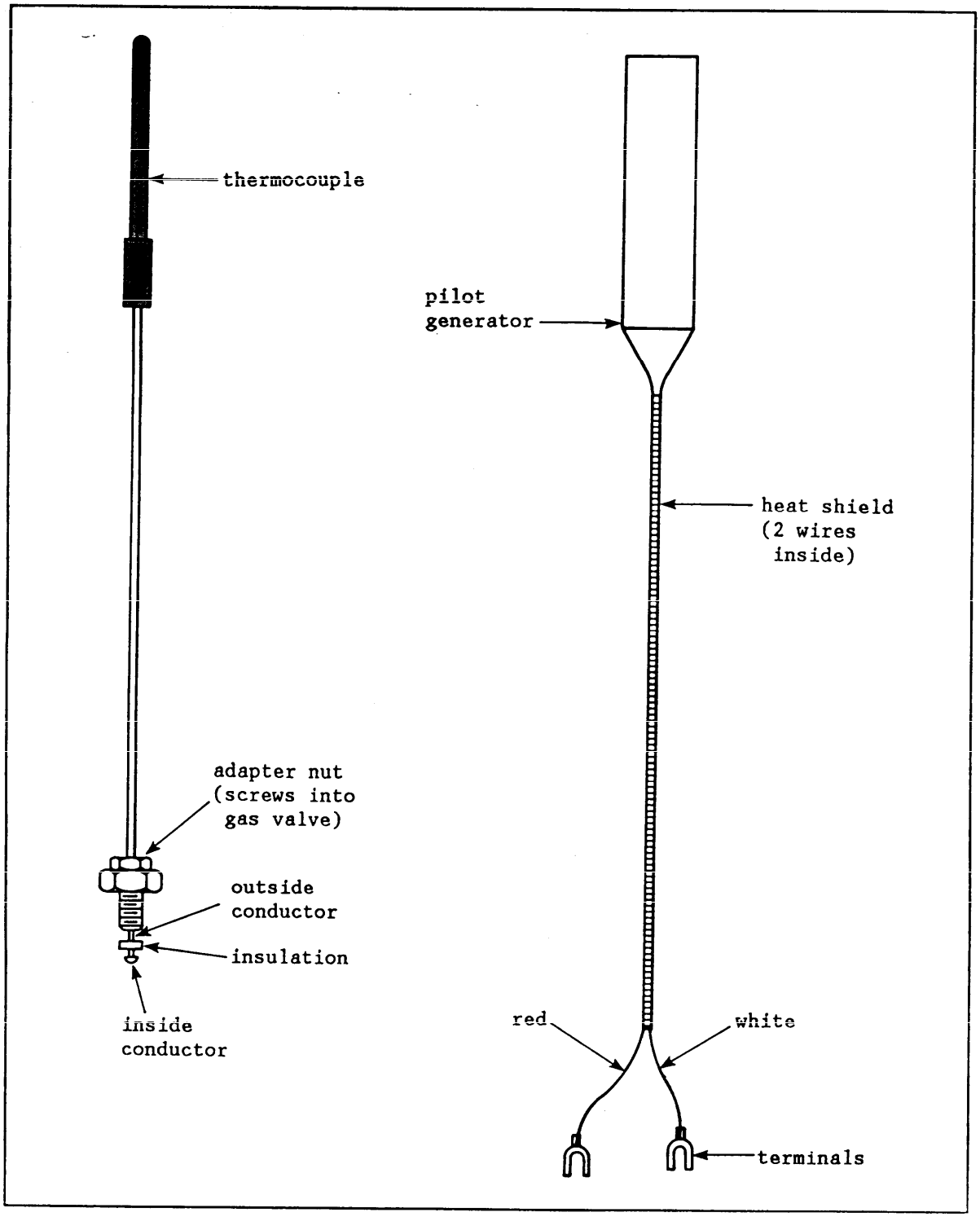

Figure 22
Pilot Generator and Thermocouple Construction

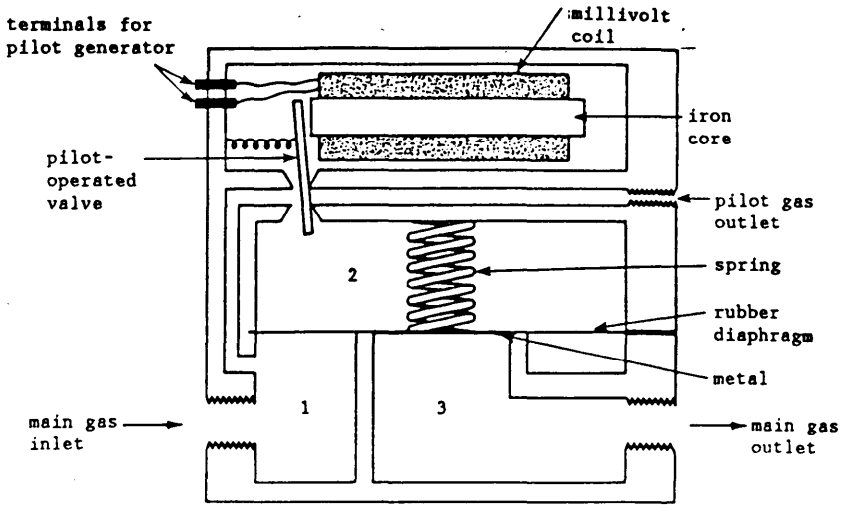

(a) de-energized

With the millivolt coil not energized, the pilot valve allows the pressure in chamber 2 to equalize with the inlet pressure in chamber 1. Pressure in chamber 2 plus spring pressure hold the valve closed.

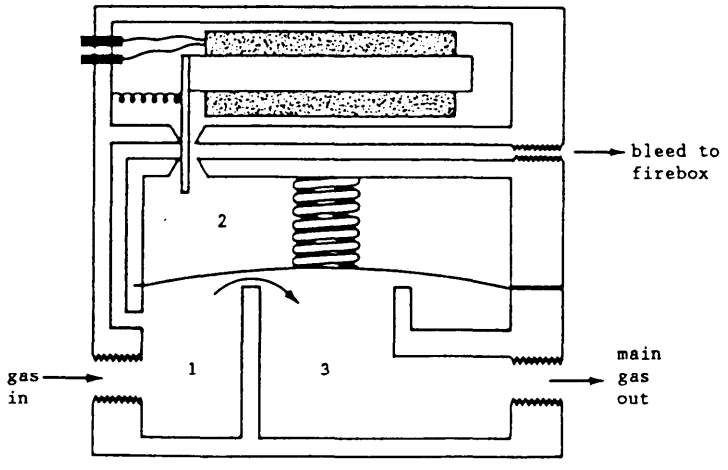

(b) energized

When the millivolt coil is energized by the pilot generator, the pilot valve bleeds off the pressure in chamber 2. The pressure in chamber 1 overcomes the spring pressure, lifting the metal disk off its seat.

Figure 23
Pilot Operated Diaphragm Valve

2.13.2 Automatic Flue Damper. The automatic flue damper shown in Figure 24 is another energy saving device popularized during the shortages of the 1970s. It is a damper which is installed in the flue gas stack. When the room thermostat calls for heating, the damper motor is energized, and the damper is moved to a fully open position. A microswitch senses when the damper has in fact been fully opened. It deenergizes the damper motor, and then allows the ignition sequence to begin. When the room thermostat has been satisfied, it shuts down the gas valve in the normal fashion. It also energizes the damper motor once again, moving the damper inside the flue stack to the closed position. The full travel of the damper requires 15 seconds. During this closing time, any residual flue gas remaining in the heat exchanger section is vented. Where local codes require outside air ventilation of the closed damper where the furnace is installed, very little energy savings will result from the closing of the vent damper. The same is true for furnaces installed in unheated garages, attics, or outdoors. Vent dampers may only be used on furnaces which are certified by the American Gas Association (AGA) as suitable for use with vent dampers.

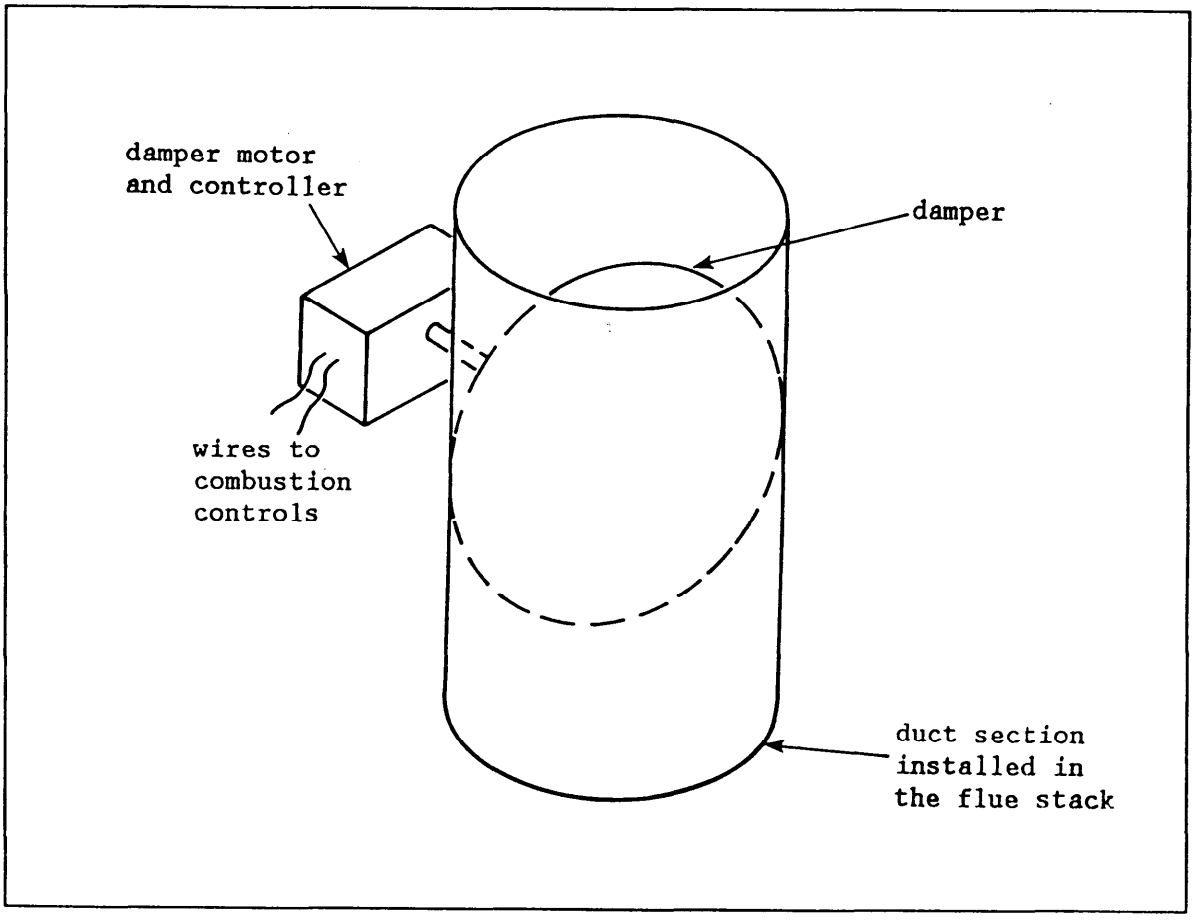

Figure 24
Automatic Flue Damper

2.14 Electronic Ignition Systems. During the energy shortages of the 1970s, electronic ignition systems were popularized. They save energy by eliminating the burning of gas to support the continuously burning of the pilot flame. Electronic ignition systems fall into two categories:

a) Intermittent Pilot Ignition, or
b) Direct Spark Ignition

The intermittent pilot system goes into action when the thermostat calls for heat. Gas is supplied to the pilot burner, and at the same time a spark is provided near the pilot gas. When the pilot has been lit and sensed, the main gas is then allowed to open and the sparking stops. When the thermostat is satisfied, both the main and pilot gas flow is stopped, and is ready for the next heating cycle.

The direct spark ignition system is different in that it does not use a pilot to light the main burner. Rather, the spark is used to light the main burner directly. With this system, the gas valve has two steps of opening. On trial for ignition, the valve allows a reduced quantity of gas to flow. When ignition of the burner has been proven, the main valve is then allowed to fully open. If the flame is not proven within the trial for ignition time, the system will go into lock-out. That is, the gas valve will close fully and the sparking will stop. The system will not try to relight again until after it is reset. Resetting the system may be accomplished by pushing a reset button on the control module if one is provided. Otherwise the system is reset by turning the thermostat down to minimum for 10 seconds, and then returning it to a call for heat. Direct ignition systems are not suitable for use with propane systems. Intermittent pilot systems may be used with either natural gas or propane. On natural gas systems, trial for ignition may go on indefinitely, but propane systems must be supplied with 100 percent lock-out if the pilot flame is not proven. There are three popular methods in use to prove the existence of a flame in electronic ignition systems. In place of the thermocouple, these systems may use any of the following:

a) **Flame Rectification.** With this system, the same wire that carries the spark senses the existence of the flame. This is done through sophisticated electronics which sense the ionized gas molecules produced in a flame.
b) **Bimetal Pilot Safety Switch.** This is similar to the two-wire bimetal safety used in conventional furnaces, except that it incorporates a normally open and a normally closed switch. The pilot gas valve is energized through the normally closed contact. When the heat of the pilot flame moves the switch, the main gas valve is energized through the normally open set of contacts.

c) Bulb-Type Sensor. A liquid- or gas-filled bulb is positioned close to the pilot flame. The presence of a flame causes the pressure to build and a switch on top of the valve is caused to change position. This type of sensing is not as quick to respond as the flame rectification type of sensor.

2.14.1 Retrofitting to Electronic Ignition. There are retrofit kits available, as shown in Figure 25. That allows a furnace which has a standing pilot for ignition to be changed over to an electronic ignition system. The retrofit kit consists of a new gas valve, a control module, and a spark ignition/flame sensing module. They are easily installed, as the component sizes are engineered to match the components being replaced. The spark/sensor is especially convenient, fitting into the same brackets which were used to hold the pilot burner and thermocouple. The only advantage in changing over to electronic ignition is the reduction in fuel required to keep the pilot burning. Normally, the cost of the retrofit cannot be justified on a furnace which is working properly. However, when a furnace has been diagnosed as needing a new gas valve, then the retrofit kit becomes an attractive option at very little additional cost.

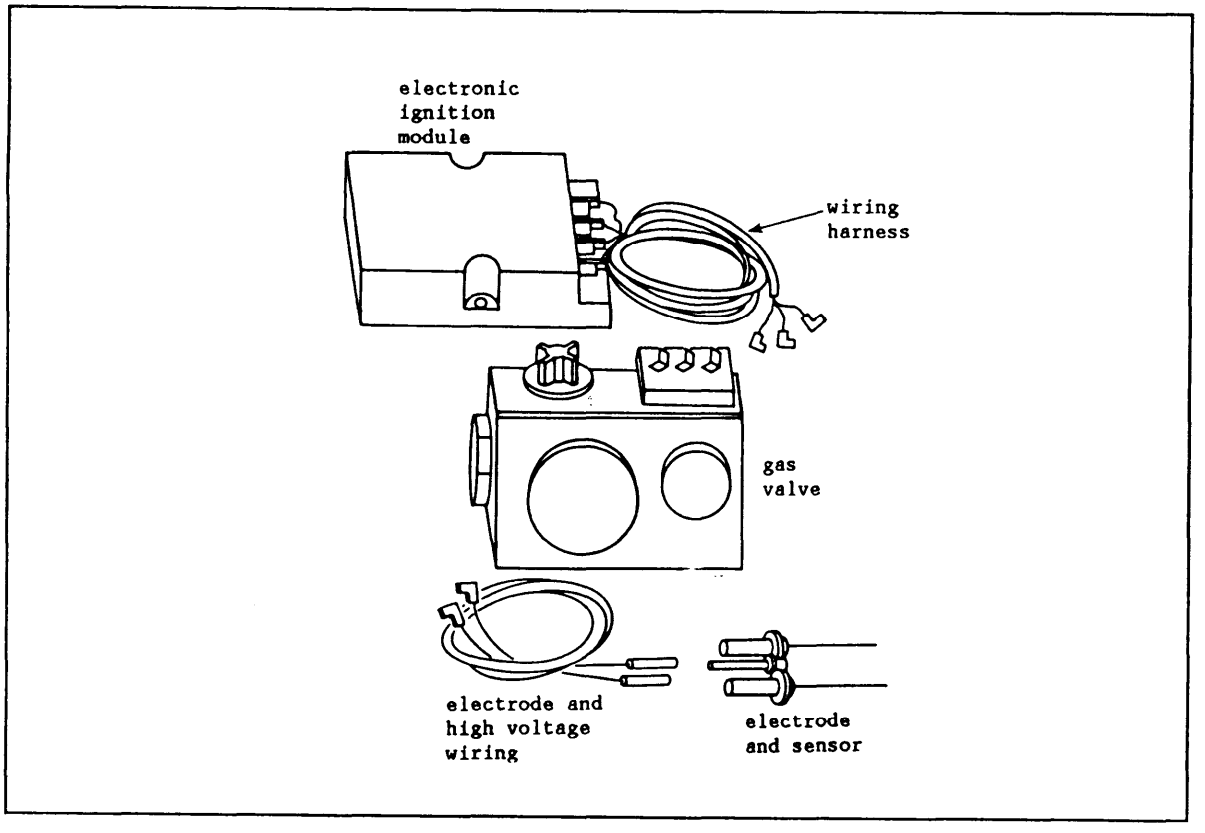

Figure 25
Electronic Ignition Retrofit Kit

2.15 Condensing Furnaces. Conventional furnaces described to this point produce heating efficiencies of between 75 and 80 percent. This means that for every 100 Btu of fuel burned, 75 or 80 Btu are converted into useful heat and delivered into the heated space. This also means that 20 or 25 Btu go up the stack with the flue gas. Condensing furnaces effectively reduce this loss up the stack. An auxiliary heat exchanger is provided in which the 300 degrees F flue gas which would normally be vented is allowed to be cooled to 100 degrees F by the 72 degrees F air returning to the furnace from the room. The big recovery in heat is attributable to the condensing of the water vapor in the flue gas which occurs when it is cooled to 100 degrees F. The volume of the flue gas is reduced dramatically. The products of combustion and the condensed water vapor are removed from the furnace through a small (2-inch) PVC drain line.

2.16 Troubleshooting Gas-Fired Furnaces. Troubleshooting gas-fired furnaces is covered in Table 2 and Table 3. Tables 2 and 3 contain the most common problems found with gas-fired furnaces. Thermostat, direct spark ignition (DSI) and intermittent pilot system (IPS) troubleshooting are covered in Section 4.

Table 2
Pilot Burner Service Analysis Chart

T/S INDICATES ROOM THERMOSTAT

CONDITION								
T/S jumpered; system won't work	T/S jumpered; system works	Room temp overshoots T/S setting	Room temp doesn't reach T/S setting	T/S seems out of calibration	T/S cycles too often	T/S doesn't cycle often enough	Room temp swings excessively	POSSIBLE CAUSES
x								T/S not at fault; check elsewhere
		x						T/S mounted on cold wall
		x						T/S wiring hole not plugged
		x						T/S exposed to cold drafts
		x				x	x	T/S not exposed to circulating air
		x	x	x				T/S not mounted level (mercury switch type)
		x	x	x				T/S not properly calibrated
			x			x		Heating plant too small or underfired
x			x					Limit control set abnormally low
			x					T/S exposed to direct rays of sun
			x					T/S affected by heat from fireplace
			x					T/S affected by lamp, TV or appliances
			x					T/S affected by stove or oven
			x					T/S is mounted on warm wall
			x					T/S mounted near register or radiator
		x				x	x	T/S heater set too high
					x			T/S heater set too low
		x					x	Heating plant too large or input excessive
		x				x	x	T/S does not have heater
	x		x			x		T/S contacts are dirty
x								Low voltage control circuit open
x								Low voltage transformer burned out
x								Main valve operator is bad
x			x	x				Bad terminals, staking, splicing or soldering
	x							T/S damaged
			x	x				Clogged filter in forced warm air system

Table 3
Troubleshooting Furnace Operations

SYMPTOM AND POSSIBLE CAUSE	POSSIBLE REMEDY
1. Flame Too Large	
(a) Pressure regulator set too high.	(a) Reset using manometer.
(b) Defective regulator.	(b) Replace.
(c) Burner orifice too large.	(c) Replace with correct size.
2. Noisy Flame	
(a) Too much primary air.	(a) Adjust air shutters.
(b) Noisy pilot.	(b) Reduce pilot gas.
(c) Burr in orifice.	(c) Remove burr or replace orifice.
3. Yellow Tip Flame	
(a) Too little primary air.	(a) Adjust air shutters.
(b) Clogged burner ports.	(b) Clean ports.
(c) Misaligned orifices.	(c) Realign.
(d) Clogged draft hood.	(d) Clean.
4. Floating Flame	
(a) Blocked venting.	(a) Clean.
(b) Insufficient primary air.	(b) Increase primary air supply.
5. Delayed Ignition	
(a) Improper pilot location.	(a) Reposition pilot.
(b) Pilot flame too small.	(b) Check orifice; clean, increase pilot gas.
(c) Burner ports clogged near pilot.	(c) Clean ports.
(d) Low pressure.	(d) Adjust pressure regulator.
6. Failure To Ignite	
(a) Main gas supply off.	(a) Open manual valve.
(b) Burned out fuse.	(b) Replace.
(c) Limit switch defective.	(c) Replace.
(d) Poor electrical connections.	(d) Check, clean, and tighten.
(e) Defective gas valve.	(e) Replace.
(f) Defective thermostat.	(f) Replace.
(g) Defective DSI or IPS	(g) Replace: See Section 4.

Table 3 (Continued)
Troubleshooting Furnace Operations

SYMPTOM AND POSSIBLE CAUSE	POSSIBLE REMEDY
7. Burner Will Not Turn Off	
(a) Poor thermostat location.	(a) Relocate.
(b) Defective thermostat.	(b) Check calibration; check switch and contacts; replace.
(c) Limit switch maladjusted.	(c) Replace.
(d) Short circuit.	(d) Check operation at valve; check for short and correct.
(e) Defective or sticking automatic valve.	(e) Clean or replace.
8. Rapid Burner Cycling	
(a) Clogged filters.	(a) Clean or replace.
(b) Excessive anticipation.	(b) Adjust thermostat anticipation for longer cycles.
(c) Limit setting too low.	(c) Readjust or replace limit.
(d) Poor thermostat location.	(d) Relocate.
9. Rapid Fan Cycling	
(a) Fan switch differential too low.	(a) Readjust or replace.
(b) Blower speed too high.	(b) Readjust to lower speed.
10. Blower Will Not Stop	
(a) Manual fan on.	(a) Switch to automatic.
(b) Fan switch defective.	(b) Replace.
(c) Shorts.	(c) Check wiring and correct.
11. Noisy Blower and Motor	
(a) Fan blades loose.	(a) Replace or tighten.
(b) Belt tension improper.	(b) Readjust (usually allow 1 in. slack.
(c) Pulleys out of alignment.	(c) Realign.
(d) Bearings dry.	(d) Lubricate.
(e) Defective belt.	(e) Replace.
(f) Belt rubbing.	(f) Reposition.

Table 3 (Continued)
Troubleshooting Furnace Operations

SYMPTOM AND POSSIBLE CAUSE	POSSIBLE REMEDY
12. Burner Will Not Turn On	
(a) Pilot flame too large or too small.	(a) Readjust
(b) Dirt in pilot orifice.	(b) Clean.
(c) Too much draft.	(c) Shield pilot.
(d) Defective auto flue damper.	(d) Replace.
(e) Defective thermocouple.	(e) Replace.
(f) Improper thermocouple position.	(f) Properly position thermopile.
(g) Defective wiring.	(g) Check connections; tighten and repair shorts.
(h) Defective thermostat.	(h) Check for switch closure and repair or replace.
(i) Defective automatic valve.	(i) Replace.
(j) Defective DSI or IPS.	(j) Replace (see Section 4).
13. Blower Will Not Run	
(a) Power not on.	(a) Check power switch; check fuses and replace if necessary.
(b) Fan control adjustment.	(b) Readjust or replace.
(c) Loose wiring.	(c) Check and tighten.
(d) Defective motor overload, protector, or motor.	(d) Replace motor.
14. Not Enough Heat	
(a) Thermostat set too low.	(a) Raise setting.
(b) Lamp or some other heat source too close to thermostat.	(b) Move heat source away from thermostat.
(c) Thermostat improperly located.	(c) Relocate thermostat.
(d) Dirty air filter.	(d) Clean or replace.
(e) Thermostat out of calibration.	(e) Recalibrate or replace.
(f) Limit set too low.	(f) Reset or replace.
(g) Fan speed too low.	(g) Check motor and fan belt and tighten if too loose.

Table 3 (Continued)
Troubleshooting Furnace Operations

SYMPTOM AND POSSIBLE CAUSE	POSSIBLE REMEDY
15. Too Much Heat	
(a) Thermostat set too high.	(a) Lower setting.
(b) Thermostat out of calibration.	(b) Recalibrate or replace.
(c) Short in wiring.	(c) Locate and correct.
(d) Valve sticks open.	(d) Replace valve.
(e) Thermostat in draft or on cold wall.	(e) Relocate thermostat to sense average temperature.

Section 2: SELF-STUDY QUESTIONS

Q2-1 Name two important differences between the properties of natural gas and propane.

Q2-2 How many cubic feet of natural gas will be burned each hour of operation for a furnace which has a 125,000-Btu/hr input rating?

Q2-3 What delivery pressure is used for natural gas burners?

Q2-4 What delivery pressure is used for propane burners?

Q2-5 What is excess air?

Q2-6 What is the effect of too much excess air? Not enough excess air?

Q2-7 What is primary air? Secondary air?

Q2-8 What size orifice would you use to convert a 4-burner, 120,000-Btu/hr input propane furnace to burn natural gas?

Q2-9 A flame appears to be longer than normal, and yellow in color. What problem would you suspect?

Q2-10 What causes the formation of soot on the heat exchanger?

Q2-11 What is flashback? What are the most likely causes?

Q2-12 Name three devices which can be used to sense the standing pilot flame.

Q2-13 What is the problem with copper piping to the pilot burner?

Q2-14 Name all the functions performed by the combination gas valve.

Q2-15 What is a timed start (also known as time delay) fan switch? In what applications must it be used?

Q2-16 Describe the sequence of operation for an electronic ignition system.

Q2-17 What is a condensing furnace? What is its major advantage?

Section 3: RESIDENTIAL AND COMMERCIAL OIL-FIRED FURNACES

3.1 Oil-Fired System. The sequence of operation for the oil-fired furnace is similar to that for the gas-fired furnace:

a) Thermostat calls for heat.
b) Burner fires up.
c) Fan turns on.

The differences between the oil-fired burners and the gas-fired burners are:

a) The physical configuration of the burner used for burning oil is different from the gas burner
b) The safety checks for safe ignition are different

3.2 Oil as a Fuel. Fuel oil is a product of the refining of crude oil, the same process which produces gasoline, kerosene, jet fuel, gases, lubricating oil, coke, and asphalt. All of these products consist principally of hydrogen and carbon. The refining process separates the crude oil into the lighter products and the heavier products. There are several different grades of fuel oils which can be produced within the refining process. They are classified by the numbers 1 through 6, with the low numbers signifying light oil and the higher numbers indicating heavier oil.

Number 1 oil is highly refined, and the most expensive of all the fuel oils. It contains only trace quantities of water or sediment, and cannot contain more than 0.5 percent sulfur, by weight.

Number 2 oil is the general purpose domestic heating oil. It may contain 0.10 percent maximum water and sediment, and 1.0 percent sulfur. It has a higher viscosity than No. 1 oil, but it still flows easily at normal temperatures.

Number 4 oil may contain up to 0.50 percent water and sediment, and there is no limit to the percent of sulfur it may contain. High sulfur contents can make fuel oils difficult to use where there are regulations governing the emission of sulfur compounds from the combustion process. The viscosity of No. 4 fuel oil is quite high.

Number 5 oil contains up to 1.0 percent water and sediment and, like No. 4 oil, may contain any percentage of sulfur. It is higher in viscosity than No. 4 oil, and requires the use of a preheating system in order to reduce the viscosity sufficiently for it to be pumped.

Number 6 oil is the most difficult of all the fuel oils to burn. It is only used because it is by far the cheapest of the oils. It may contain up to 2.0 percent water and sediment, and there is no specification as to the amount of sulfur or ash that it may contain. It may only be used in burners equipped with a preheater, and permitting the use of this high viscosity fuel.

Contrary to what some may believe, fuel oil is not very flammable. If you were to apply a propane torch flame to a bucket of fuel oil at room temperature, it would not ignite. In fact, it is the job of oil burners to break the oil supply into a mist in order to provide an extreme amount of surface area relative to the weight of oil. Without these measures, the oil will not burn.

The physical properties of fuel oils can vary depending upon the source and the refining process. The heating value will generally fall in the range of 18,000 to 20,000 Btu per pound. Its density can vary from 7.4 to 8.3 pounds per gallon (it is lighter than water). Heating value per gallon is relatively consistent between different fuel oils, providing approximately 140,000 usable Btu per gallon.

3.3 Oil Combustion. Combustion, as we normally think of it, is generally described as **rapid oxidation** of any material which is classified as combustible matter. The term **oxidation** simply means the adding of oxygen in a chemical reaction and **combustible matter** means any substance which combines readily and rapidly with oxygen under certain favorable conditions. Since fuel oil primarily consists of carbon (85 percent) and hydrogen (15 percent), combustion of fuel oil, according to our previous definition, is the rapid combining of carbon and hydrogen with oxygen.

As you know, the oxygen needed for combustion comes from the air blown into the burner. Approximately 21 percent of the air is oxygen while the remaining 79 percent is nitrogen. Therefore, to supply the oxygen needed for combustion, a great deal of nitrogen goes along for a free ride. This will become an important factor in later discussions of proper oil burner adjustment!

What we see and feel from combustion - flames, smoke, heat - is a result of chemical reactions. Since we can't see carbon, hydrogen or oxygen atoms (the smallest units to combine), we symbolize the reactions with formulas that describe the process. For example:

$$\text{Carbon} + \text{Air} \left(\begin{array}{c} \text{Oxygen} \\ + \\ \text{Nitrogen} \end{array} \right) \xrightarrow[\text{(forms)}]{} \text{Carbon Dioxide} + \text{Nitrogen} + \text{Heat} \qquad (1)$$

$$\text{Hydrogen} + \text{Air} \left(\begin{array}{c} \text{Oxygen} \\ + \\ \text{Nitrogen} \end{array} \right) \xrightarrow[\text{(forms)}]{} \text{Water Vapor} + \text{Nitrogen} + \text{Heat} \qquad (2)$$

These reactions can be rewritten using symbols that represent the different chemical species in the following manner:

$$C + O_2 + N_2 \longrightarrow CO_2 + N_2 + \text{Heat} \quad (1)$$

$$2H_2 + O_2 + N_2 \longrightarrow 2H_2O + N_2 + \text{Heat} \quad (2)$$

Both chemical reactions produce entirely new products and each reaction gives off heat. However, you may have noticed that in each reaction nitrogen has not changed, indicating that nitrogen does not participate in the reactions. If pure oxygen rather than air were used in these reactions, the final products of each reaction would be heat plus carbon dioxide and water, respectively. We know that flue gas does not contain 100 percent carbon dioxide and water, now we can see why! Because of the large amounts of nitrogen in the air, the bulk of the flue gas is made up of unreacted nitrogen.

If exactly the right amount of air (no excess air) were supplied for complete combustion of the carbon and hydrogen in the fuel oil, the products of combustion would be as indicated in Table 4. However, with actual oil burner equipment, it is not possible to get a perfect mixture in which all the carbon and hydrogen are supplied with the exactly correct quantity of oxygen.

To insure that all the carbon and hydrogen come into contact with enough oxygen to burn completely, excess air must be supplied. The excess air is simply air over and above the theoretical requirement for the combustion of fuel oil. With excess air needed for combustion, reaction (1) becomes:

$$C + 2O_2 + N_2 \longrightarrow CO_2 + N_2 + O_2 + \text{Heat} \quad (3)$$

Note that the only difference between reaction (3) and reaction (1) is that oxygen is a product of the reaction. This oxygen is the oxygen in the excess air that does not combine with carbon to make carbon dioxide. In essence, extra oxygen is provided, as a component of excess air, to guarantee that all the carbon and hydrogen come in contact with the oxygen and burn.

Table 4
Amount by Weight and Volume of Combustion Products When One Pound of Fuel Oil is Burned (0 Percent Excess Air)

OIL (1 pound)		WATER (1.18 pounds) (amount of water vapor is not considered in percent carbon dioxide by volume determination)
+		+
AIR (14.36 pounds or 188 cubic feet) (Air is 20.9 percent oxygen and 79.1 percent nitrogen)	forms →	84.7 percent by volume NITROGEN (11.02 pounds or 150 cubic feet) 15.3 percent by volume CARBON DIOXIDE (3.16 pounds or 27.2 cubic feet)
1.00 lb. oil 14.36 lb. air 15.36 lb. total		1.18 lb. water 11.02 lb. nitrogen 3.16 lb. carbon dioxide 15.36 lb. total

This excess air does not react during the combustion process but enters the heating unit at room temperature and reduces the temperature of the combustion gases so less heat is available to be transferred to the distribution medium. As a result, excess air is a source of heat loss. By introducing 50 percent excess air, the situation shown in Table 5 is created. Compare this with Table 4, note that:

a) The amount (weight) of water, carbon dioxide, and nitrogen formed is the same.
b) The percent by volume of carbon dioxide and nitrogen formed is less than is formed in Table 4.
c) Oxygen (as part of excess air) is a product in Table 5 but not in Table 4.

Table 5
Amount by Weight and Volume of Combustion Products When One Pound of Fuel Oil is Burned (50 Percent Excess Air)

OIL (1 pound)		WATER (1.18 pounds)
+		+
		56.1 percent by volume NITROGEN (11.02 pounds or 150 cubic feet)
50 percent excess AIR (21.54 pounds or 281 cubic feet)		
	forms →	10.2 percent by volume CARBON DIOXIDE (3.16 pounds or 27.2 cubic feet)
(Air is 20.9 percent oxygen and 79.1 nitrogen)		
		33.8 percent by volume EXCESS AIR (7.18 pounds or 90.4 cubic feet)
		1.18 lb. water
		11.02 lb. nitrogen
1.00 lb. oil		3.16 lb. carbon dioxide
21.54 lb. air		7.18 lb. excess air
22.54 lb. total		22.54 lb. total

In Table 5, since 20.9 percent of the excess air is oxygen, 7.1 percent of all the combustion gases is oxygen. You determine this by multiplying the percent excess air (33.8 percent) times that portion of excess air which is oxygen (0.209). This gives approximately 7.1 percent oxygen.

Note in Table 5, the percentage of carbon dioxide or oxygen changed from that shown in Table 4 is the result of excess air. Therefore, we can use the percent carbon dioxide or oxygen in the flue as a measure of excess air or vice versa - as a general rule:

a) the greater the carbon dioxide, the less excess air;
b) the greater the oxygen, the more excess air.

Figure 26 displays the relationship between carbon dioxide and excess air.

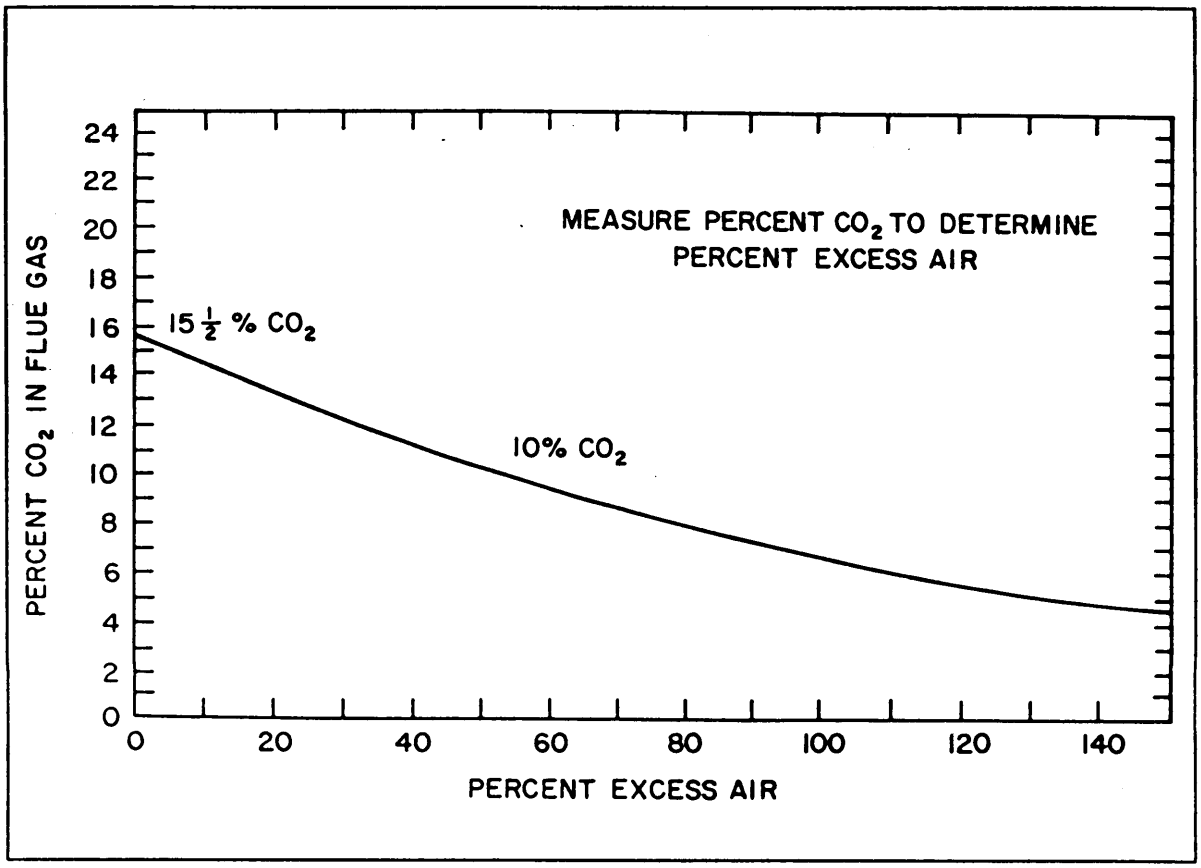

Figure 26
Relationship Between Excess Air and Percent Carbon Dioxide

The above discussion is a simplification of the actual combustion process. The chemical reactions provided are only those that are important to the overall combustion process. Nevertheless, the information in this section is sufficient to support you in your oil burner service work. Make sure you understand the concepts and if necessary reread this section or ask a knowledgeable person to assist you. Don't go on without understanding the basic concepts!

3.3.1 Role of Excess Air in Combustion. You have seen that excess air must be supplied to insure adequate mixing of fuel and oxygen. However, excess air is one of the major causes of low efficiencies. To see how this occurs consider that excess air:

a) Dilutes combustion gases.
b) Absorbs heat.
c) Drops overall temperature of combustion gases.

The dilution of combustion gases occurs simply because of the presence of additional gas in the form of excess air. The excess air absorbs heat in the combustion zone and reduces the flame temperature. This in turn reduces the transfer of heat to the heat exchanger since a significant amount of heat is transferred by radiation. Moreover, as excess air is introduced, the overall temperature of the combustion gases drops as heat from these combustion gases is used to raise the temperature of the excess air. This process is similar to adding refrigerated cream to a cup of coffee as shown in Figure 27. The cup of coffee is originally 160 degrees F (high temperature) and occupies a small volume (half a cup). Adding cream at 40 degrees F increases the volume (almost a full cup) and lowers the overall temperature to 120 degrees F (mild temperature). Note that the temperature of the mixed coffee and cream is higher than the temperature of the cream alone and lower than the temperature of the coffee alone. Heat from the coffee went into heating the cream and the overall temperature dropped, in other words, the cream absorbed some heat from the coffee.

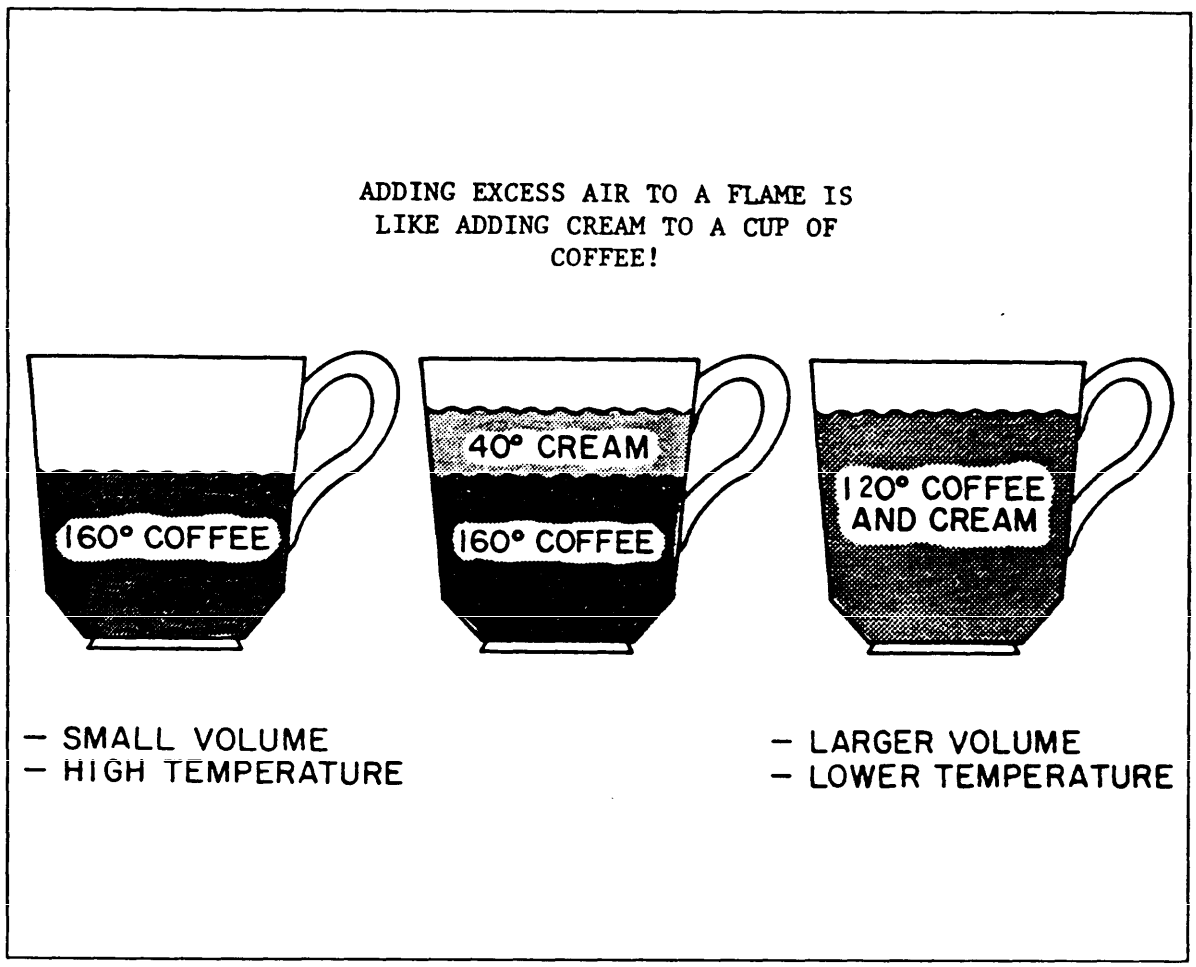

Figure 27
Representation of the Effect of Excess Air on Combustion Gas Temperature

Figure 28, coffee example, illustrates the effect of excess air (shown as water) in diluting the gas (coffee) and the resulting reduction in the carbon dioxide percent.

This temperature reduction and dilution takes place in the combustion zone not in the flue or stack. It is important to note that the effect of excess air on the temperature of the flue gas is different; with more excess air the flue gas temperature tends to rise. This happens because the volume of combustion gas per unit of fuel burned is now greater than before so that the gases pass over the heat exchange surfaces more rapidly and reduce the contact time. This reduces the heat transfer rate to the heat exchanger.

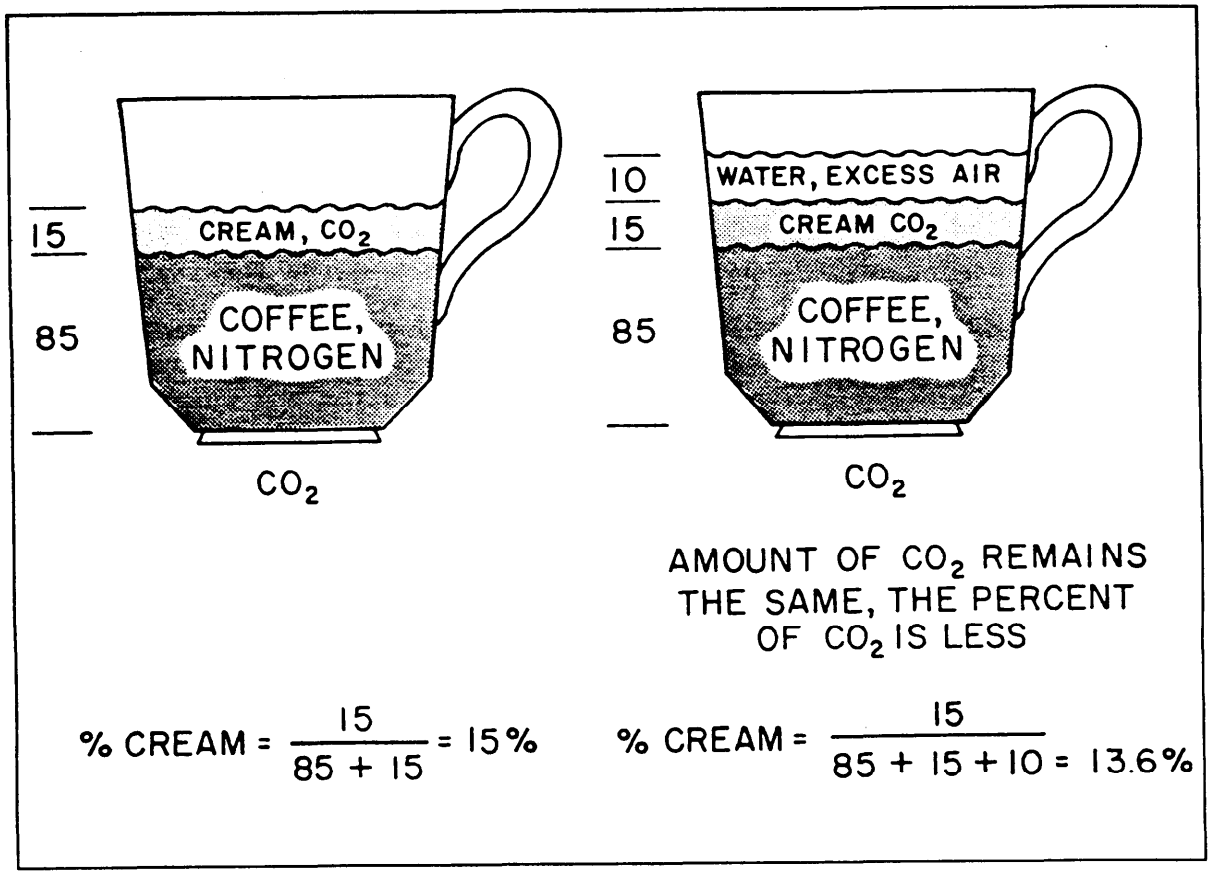

Figure 28
The Effect of Excess Air on Carbon Dioxide

To review, remember that excess air causes the following:

a) Lower flame temperature.
b) Lower combustion gas temperature.
c) Higher flue or stack gas temperature.
d) Poorer heat exchange to the distribution medium.

All of these changes play a role in reducing the efficiency of the heating system. So minimizing excess air is essential in the proper adjustment of oil burners; however, simply reducing excess air without concern for other factors could lead to a great deal of trouble.

Excess air causes one other problem that cannot be seen in the comparison of coffee and cream. Excess air increases the volume of combustion products per unit of fuel burned so that the products pass over the heat exchange surfaces more rapidly and reduce the contact time. As was pointed out earlier, this reduces the heat transfer rate to the heat exchanger.

3.3.2 Excess Air-Smoke Relationship. During the combustion of oil, particularly, during burner start-up and shut-down, some smoke is usually generated since some of the oil droplets do not contact enough oxygen to complete the reaction which forms carbon dioxide. This smoke consists of small particles of mainly unburned carbon. Some of these particles stick to the heat exchanger surfaces acting as insulation and can eventually clog up the flue passages while others are emitted through the stack and add to the pollution of the air.

There must be sufficient excess air to provide good mixing of combustion air and fuel oil. Without this excess air, incomplete combustion occurs and smoke is formed. Thus, to minimize smoke, excess air is generally added. Unfortunately, as the amount of excess air is increased, the transfer of heat to the heat exchange medium (hot water, warm air, or steam) is reduced. A delicate balance must be achieved between smoke generation (caused by insufficient excess air) and reduced heat transfer due to reduced combustion gas temperature and an increased volume of combustion products (caused by unnecessary excess air).

Figure 29 illustrates the typical relationship between smoke and efficiency and excess air. Notice that smoke and efficiency increase as the excess air is decreased. The exact shape of this curve varies from unit to unit. Knowing this curve can give a clear picture of how the burner air should be adjusted. The highest efficiency occurs when trade-off between smoke and excess air is properly balanced.

3.3.2.1 Effect of Air Leaks. Air which leaks into the combustion gases before they pass through the heat exchanger acts like excess air. The air leaks dilute the combustion gases, cooling them and increasing their volume so that they pass through the heat exchanger more quickly. However, an air leak is even worse than excess air in the combustion chamber because an air leak cannot reduce the smoke formed in the combustion zone.

3.4 Combustion Chamber. The function of the combustion chamber is to surround the flame and to radiate heat back into the flame to aid in fuel vaporization and combustion. The combustion chamber design and construction helps determine whether the fuel will be burned efficiently. The chamber must be made of the correct material, properly sized for the nozzle firing rate, shaped correctly, and of the proper height.

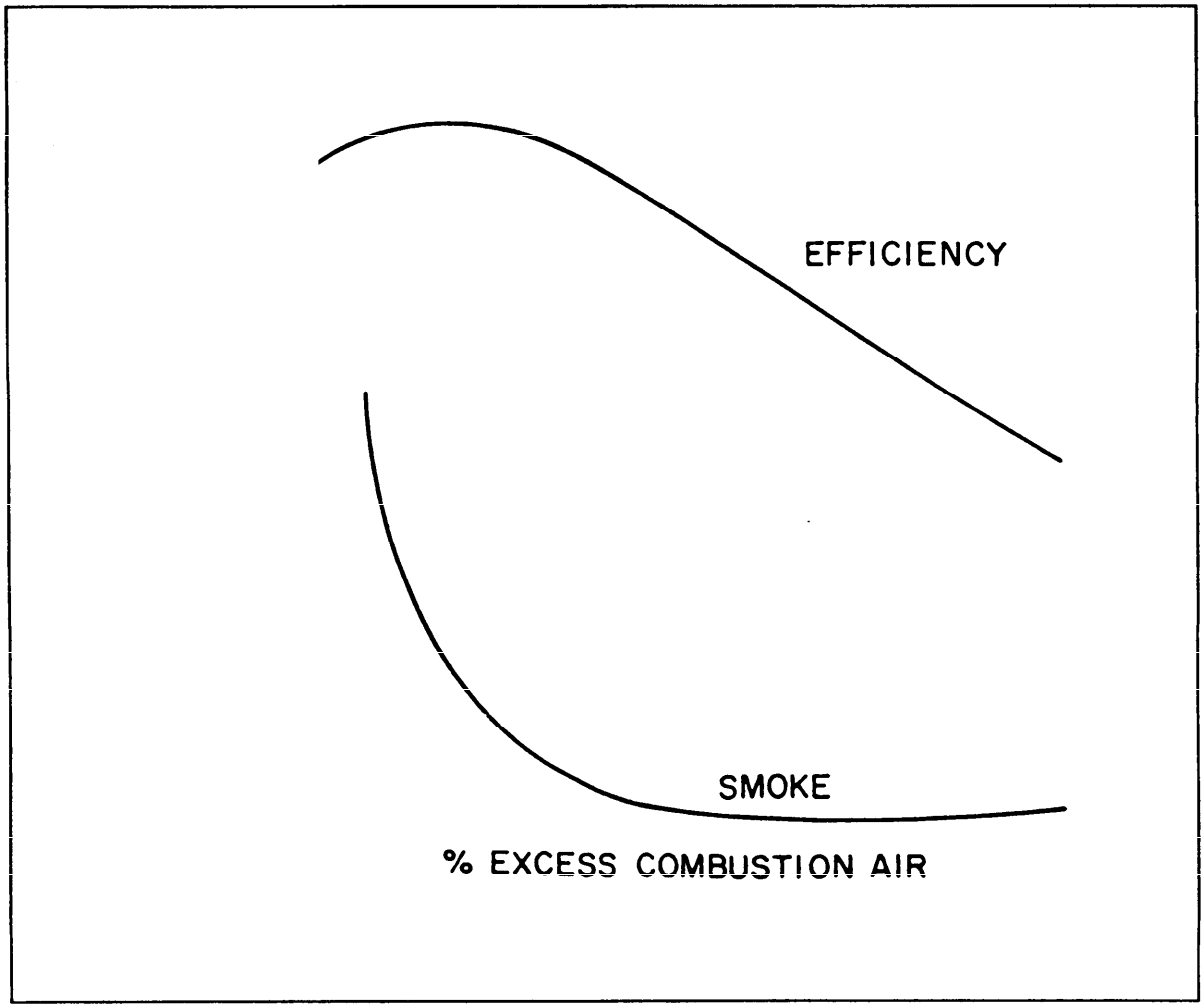

Figure 29
Smoke and Efficiency Versus Excess Air Curve

The chamber should be designed and built to provide the maximum space required to burn the oil needed to fire the heating plant and to meet its load. Unburned droplets of oil should not touch the chamber surface, especially a cold surface. A cold surface will reduce combustion temperatures and cause soot and carbon formation. The hotter the area around the burning zone, the easier the oil droplets will vaporize and ignite, and the hotter the flame

will be. If the chamber is too small, the oil will not have enough time to complete combustion before it strikes the colder walls.

When the chamber is too large, there will be areas in the chamber which the flame will not fill. This causes cooler chamber surfaces and reduces the reflected heat from the chambers walls. As a result, the fuel droplets will not evaporate as rapidly in the cooler chamber and will be more difficult to burn completely. More air will be required to burn smoke-free and the result will be low carbon dioxide (high oxygen) and lowered efficiency.

3.4.1 Floor Size. The size of the combustion chamber is measured in square inches of floor space. The ideal size for a home is about 80 to 90 square inches per gallon of oil. If the burner is functioning well and the chamber has quick heating refractory material, and is properly designed, it is possible, in most cases, to use this formula up to 1.50 GPH. For residential use, the chamber should not normally exceed 95 square inches per gallon for a high pressure (retention head) burner.

When the combustion chamber is accurately sized to the heating plant capacity it is extremely important that the nozzle pattern and spray angle conform to the characteristics of the burner air pattern and that the oil pressure at the nozzle should normally be 100 psig unless manufacturer's instructions contain other specifications.

3.4.2 Shape. The majority of combustion chambers are square, rectangular or round. Curved surfaces generally produce more complete mixing of oil and air and also eliminate the pockets of air in the corners of square or rectangular chambers, which reduces the reflected heat from the chamber walls to the flame. The air in these corners also does not usually become a part of the combustion process and therefore dilutes the combustion products as they flow through the heating plant. This is particularly true of the corners at the front of the chamber where the oil is sprayed in because the flame is narrow and the oil has not been heated up to maximum temperature at this point. See Figure 30.

3.4.3 Walls. It is important that the walls of the chamber should be high enough to assist combustion, but not to interfere with the heat transfer from the combustion products to the heat exchanger. Table 6 shows the height to be used based on the firing rate. The chamber wall should be 2 to 2-1/4 times as high above the nozzle as it is from the floor to the nozzle.

If the base of a heating plant has a tendency to overheat, the walls should be 2-1/2 to 3 times the height from floor to nozzle. This is sometimes a problem in gravity type air duct systems. Be sure to use insulation between the furnace and chamber wall up to the top of the wall.

Space between the chamber wall and the heating plant should always be filled with an insulating material, such as mica pellets. A poor grade of backfill shortens the life of the chamber, reduces the efficiency at which the oil burns, and increases combustion noise.

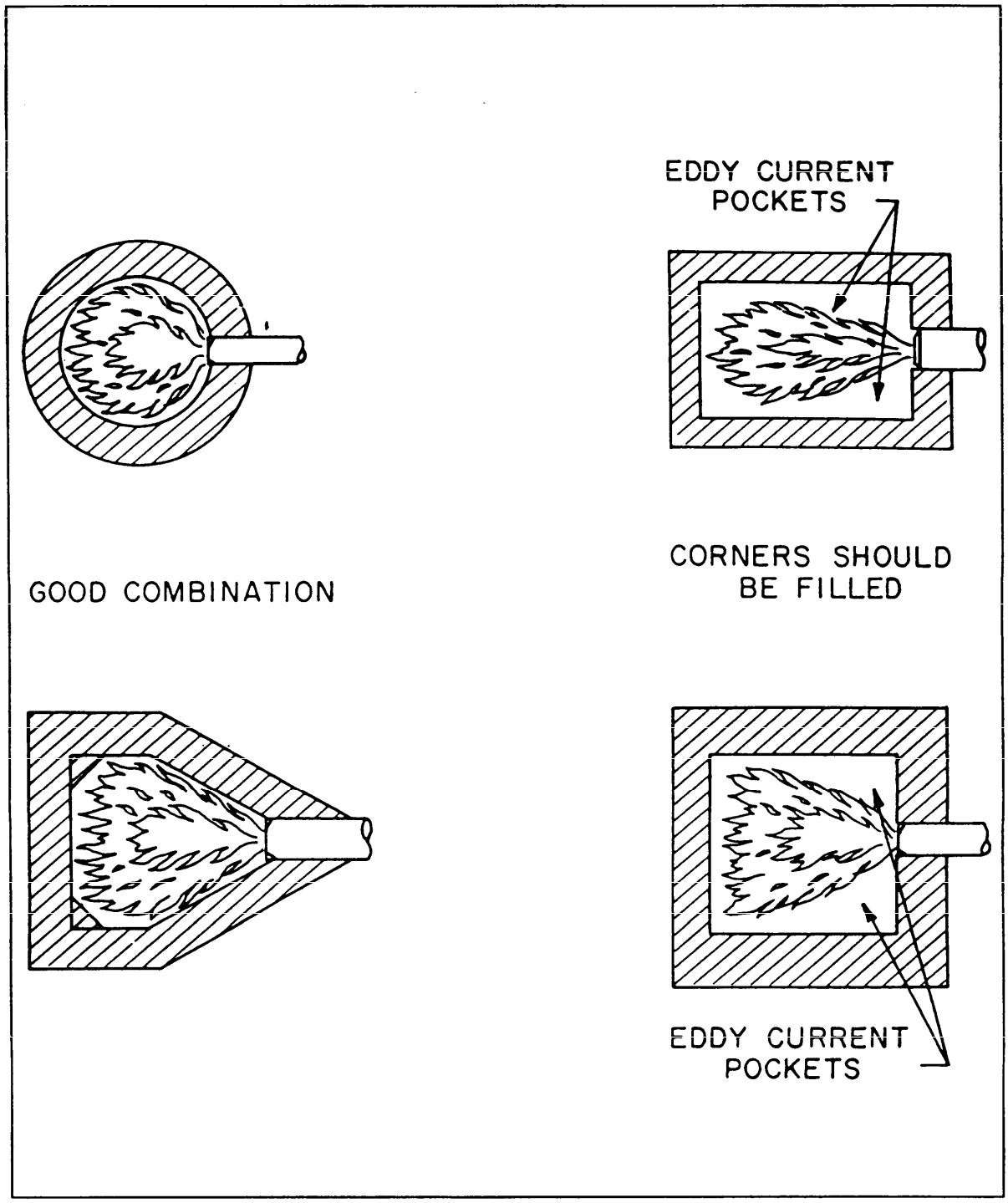

Figure 30
Combustion Chamber Design

Table 6
Combustion Chamber Sizing Data

OIL CONSUMPTION G.P.H.		SQ. IN. AREA COMBUSTION CHAMBER	DIMENSION OF SQ. COMBUSTION CHAMBER (IN.)	DIAMETER OF ROUND COMBUSTION CHAMBER (IN.)	DIAMETER OF RECTANGULAR COMBUSTION CHAMBER (IN.)
	.75	60	8 x 8	9	.....
	.85	68	8.5 x 8.5	9	.....
	1.00	80	9 x 9	10 1/8	.....
	1.25	100	10 x 10	10 1/4	.....
80 sq.in.	1.35	108	10 1/2 x 10 1/2	11 3/4	.....
per gal.	1.50	120	11 x 11	12 3/8	10 x 12
	1.65	132	11 1/2 x 11 1/2	13	10 x 13
	2.00	160	12 5/8 x 12 5/8	14 1/4	11 x 14 1/2
	2.50	200	14 1/4 x 14 1/4	16	12 x 16 1/2
	3.00	240	15 1/2 x 15 1/2	17 1/2	13 x 18 1/2
	3.50	315	17 3/4 x 17 3/4	20	15 x 21
	4.00	360	19 x 19	21 1/2	16 x 22 1/2
90 sq.in.	4.50	405	20 x 20		17 x 23 1/2
per gal.	5.00	450	21 1/4 x 21 1/4		18 x 25
	5.50	550	23 1/2 x 23 1/2		20 x 27 1/2
	6.00	600	24 1/2 x 23 1/2		21 x 28 1/2
	6.50	650	25 1/2 x 25 1/2		22 x 29 1/2
	7.00	700	26 1/2 x 26 1/2		23 x 30 1/2
100 sq.in.	7.50	750	27 1/2 x 27 1/4		24 x 31
per gal.	8.00	800	28 1/4 x 28 1/4		25 x 32
	8.50	850	29 1/4 x 29 1/4		25 x 34
	9.00	900	30 x 30		25 x 36
	9.50	950	31 x 31		26 x 36 1/2
	10.00	1000	31 3/4 x 31 3/4		26 x 38 1/2

Table 6 (Continued)
Combustion Chamber Sizing Data

OIL CONSUMPTION G.P.H.		CONVENTIONAL BURNER SINGLE NOZZLE	CONVENTIONAL BURNER TWIN NOZZLE	SUNFLOWER FLAME BURNER SINGLE NOZZLE	SUNFLOWER FLAME BURNER TWIN NOZZLE
	.75	5	x	5	x
	.85	5	x	5	x
	1.00	5	x	5	x
	1.25	5	x	5	x
80 sq.in.	1.35	5	x	5	x
per gal.	1.50	5	x	6	x
	1.65	5	x	6	x
	2.00	6	x	7	x
	2.50	6.5	x	7.5	x
	3.00	7	5	8	6.5
	3.50	7.5	6	8.5	7
	4.00	8	6	9	7
90 sq.in.	4.50	8.5	6.5	9.5	7.5
per gal.	5.00	9	6.5	10	8
	5.50	9.5	7	10.5	
	6.00	10	7	11	8.5
	6.50	10.5	7.5	11.5	9
	7.00	11	7.5	12	9.5
100 sq.in.	7.50	11.5	7.5	12.5	10
per gal.	8.00	12	8	13	10
	8.50	12.5	8.5	13.5	10.5
	9.00	13	8.5	14	11
	9.50	13.5	9	14.5	11.5
	10.00	14	9	15	12

3.4.4 Burning Setting. The chamber must be installed so that the oil can burn clean without inpinging on the floor and causing carbon to form. Figure 31 shows the inside dimensions recommended by a burner manufacturer. The burner end cone should typically be installed 1/2-inch back from the inside chamber wall. Always check the individual manufacturer's installation instruction manual for proper burner mounting dimensions. We recommend that you cover the end cone edges with high temperature insulating material to prevent the burnout of the end cone.

3.4.5 Baffles. A baffle stool or a hanging baffle installed over the combustion chamber may help increase the combustion chamber temperature. It will aid in causing the combustion products to scrub the walls of the heat exchanger which will result in more heat absorption.

A firetube boiler can often be equipped with spiral (twist) baffles in the tubes to enhance heat transfer and thus improve efficiency. These baffles should be checked and cleaned annually.

3.4.6 Soft Refractory. Refractories of low specific heat and low conductivity (fiberfax or Kaowool ceramic fiber types) will rise in temperature more rapidly from a cold start and maintain a higher temperature during steady operation of an oil burner. This will help produce more complete combustion and increase the heat transfer by radiation to the heat transfer surfaces of the heat exchanger.

Tests by National Institute of Standards and Technology (NIST) comparing a hard brick to a precast soft chamber in the same boiler determined that losses by radiation, conduction, convection and incomplete combustion were 13.4 percent for the brick and 8.6 percent for the precast. The difference was equal to 8300 Btu/hour in favor of the precast. This amounts to a possible saving of 6 percent.

Although it is possible to obtain a relatively good fire without a chamber, you should realize that a properly sized and shaped combustion chamber will substantially improve combustion, provide a hotter flame, and reduce the amount of soot accumulation associated with start-up and shut-down.

Commercial burners with large input rates are frequently fired without a chamber, but with small residential burners the chamber becomes extremely important. The modern materials for chamber construction become red hot within 20 seconds after starting the fire, causing heat to be reflected back into the oil spray, speeding up the conversion of liquid oil to vapor, and making the flame smaller but hotter. In general, combustion temperatures of high speed flame retention head burners will be somewhat higher than older conventional burners.

1 Firing Rate (GPH)	2 Length (L)	3 Width (W)	4 Dimension (C)	5 Suggested Height (H)	6 Minimum Dia. Vertical Cyl.
0.50	8	7	4	8	8
0.65	8	7	4.5	9	8
0.75	9	8	4.5	9	9
0.85	9	8	4.5	9	9
1.00	10	9	5	10	10
1.10	10	9	5	10	10
1.25	11	10	5	10	11
1.35	12	10	5	10	11
1.50	12	11	5.5	11	12
1.65	12	11	5.5	11	13
1.75	14	11	5.5	11	13
2.00	15	12	5.5	11	14
2.25	16	12	6	12	15
2.50	17	13	6	12	16
2.75	18	14	6	12	18

NOTES:

1. Flame lengths are approximately as shown in column (2). Often, tested boilers or furnaces will operate well with chambers shorter than the lengths shown in column (2).
2. As a general practice any of these dimensions can be exceeded without much effect on combustion.
3. Chambers in the form of horizontal cylinders should be at least as large in diameter as the dimension in column (3). Horizontal stainless steel cylindrical chambers should be 1 to 4 inches larger in diameter than the figures in column (3) and should be used only on wet base boilers with non-retention burners.
4. Wing walls are not recommended. Corbels are not necessary although they might be of benefit to good heat distribution in certain boiler or furnace designs, especially with non-retention burners.

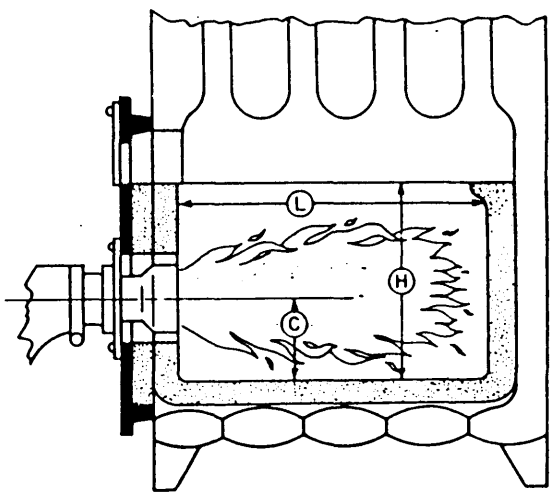

Figure 31
Recommended Minimum Inside Dimensions of Refractory Type Combustion Chambers

While we have had much to say about the improved combustion achieved through utilization of a chamber, there are also some other benefits to be considered. Chambers act as sound absorbers and this feature is highly desirable as flame-retention burners tend to be somewhat louder than the older burners they are replacing. Another benefit obtained from combustion chambers is the protection of those portions of the dry-base boiler or furnace which could not withstand prolonged exposure to intense heat or the rapid heating-cooling of the metal.

When the correct firing rate to match the heat load has been determined, the proper size combustion chamber should be selected to match that firing rate. This will result in maximum efficiency being achieved. The relation between the size of an existing chamber and the determination of the correct firing rate to fit that chamber is important and should be considered whenever the firing rate is altered.

3.5 Heat Exchanger. The next step in the operation of the heating plant is the transfer of heat energy from the combustion gases to the air in the furnace or to the water in the boiler. This is accomplished in the heat exchanger which can be thought of as a wall which keeps gases or liquids separated and allows heat energy to flow out of the hot medium and into the cooler medium. Heat is transferred in two ways:

a) Hot combustion gases directly contact the heat exchange surfaces and transfer heat.
b) Radiant energy in the combustion chamber heats the heat exchange surfaces (similar to being heated by the sun).

The selection of wall material will depend on its ability to easily pass heat, its cost, and several other factors. This is a whole area of study in and of itself.

If the heat exchanger were a perfect transfer of heat, all the energy in the combustion products would be transferred to the distribution medium. This would mean no losses of heat! With no heat losses the stack temperature would be reduced to room temperature. Of course you know this is not the actual case. Losses are caused by:

a) Temperature differences.
b) Contact time.
c) Insulation.

The greater the temperature differences between the combustion gases and the temperature of the air or water to be heated, the more heat will be transferred in a given time. There is very little that can be done about the temperature of the air or water to be heated, but if the temperature of the combustion gases can be raised, more heat would be transferred. This is another reason why a high flame temperature from the burner is desirable.

The longer the hot combustion gases are in contact with the walls of the heat exchanger, the more heat will be transferred. The scrubbing of the heat exchanger walls by the combustion gases is essential. This means that small flue passages in the heat exchanger provide better contact than wide open flue passages. With greater heat exchange surface area per volume of combustion gas, more intimate contact of heat and walls occurs. Longer contact time can also be achieved by reducing the amount of combustion gases produced per gallon of fuel burned or per period of time. A smaller volume takes longer to flow over heat exchange surfaces. Lowering the excess air can reduce the volume of combustion gases produced per gallon of fuel burned and reducing the nozzle firing rate can reduce the volume of combustion gases produced per unit time. Figure 32 indicates the relationship between excess air and the flame temperature and volume of combustion gases.

Insulation is any material that stops or slows down the normal rate of heat transfer. Obviously, you do not want to place an insulating material between the combustion gases and the heat exchanger walls. Smoke deposits (often called soot) act as an insulator! Smoke deposits from smoky combustion can collect on the heat exchange surfaces and reduce the effectiveness of the heat transfer process. Estimates have been made indicating that a 1/8-inch thick coating of soot on heat exchanger walls has the same insulating ability as a 1-inch thick fiberglass sheet.

It should be understood at this point that smoke caused by a poorly operating oil burner is a bad thing, not because the smoke represents unburned fuel, but because:

SMOKE SOOTS UP HEAT EXCHANGE SURFACES AND PREVENTS TRANSFER OF HEAT TO THE HEATING LOAD!

A good burner helps the heat exchanger be more efficient by:

a) Providing combustion products at a high temperature. This means a high flame temperature.
b) Providing combustion products which have a low volume per gallon of fuel burned. This means low excess air.
c) Providing clean combustion products which contain a minimum of smoke.

3.6 Draft. In the oil heat industry, the word "draft" is used to describe the slight vacuum, or suction, which exists inside most heating plants. The amount of vacuum is called draft intensity. Draft volume, on the other hand, specifies the volume (cubic feet) of gas that a chimney can handle in a given time. Draft intensity is measured in "inches of water" - just like a mercury barometer is used to measure atmospheric pressure in inches of mercury, a draft gauge is used to measure draft intensity (which is really pressure) in inches of water.

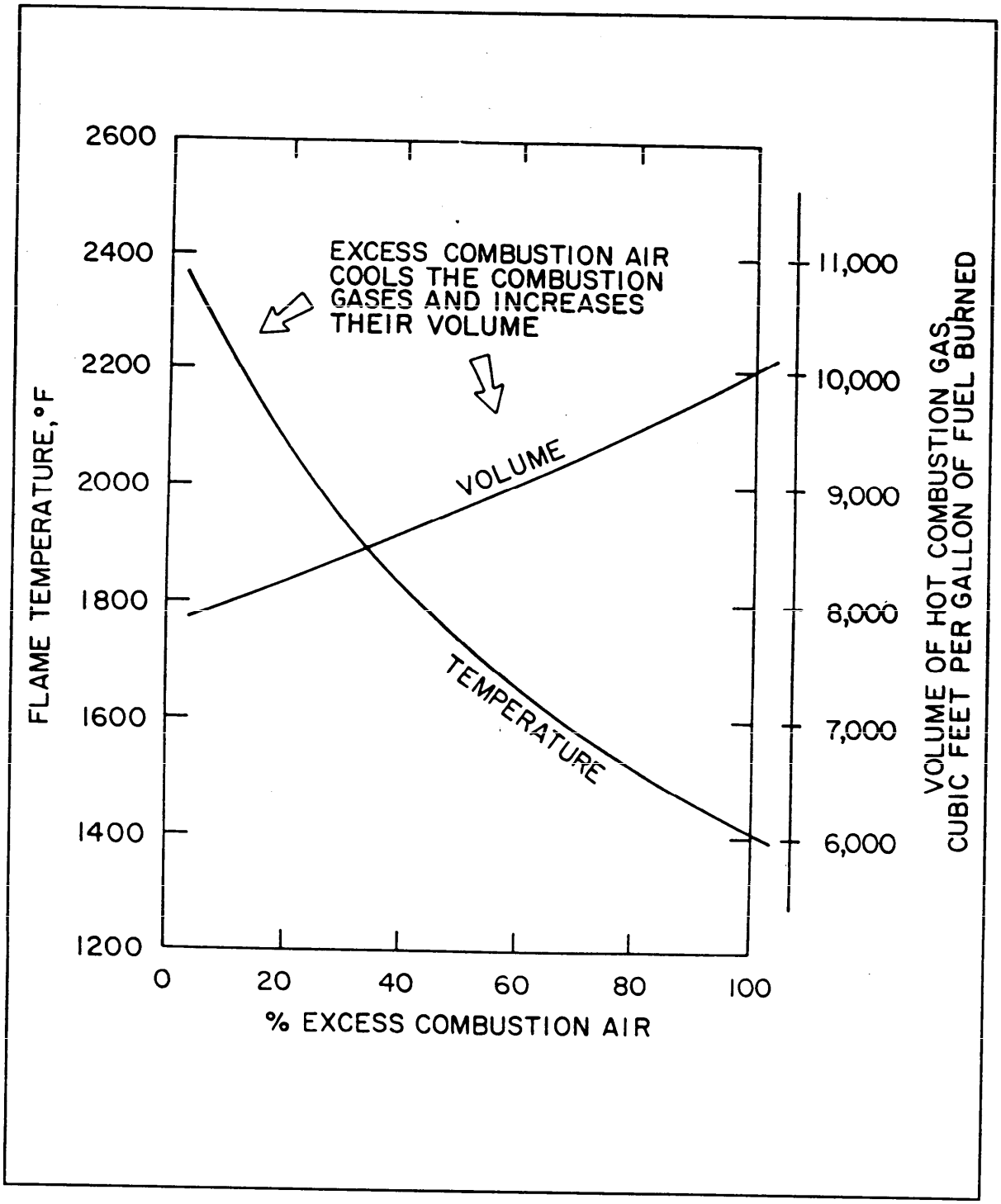

Figure 32
Approximate Relationship for Percent Excess Air With Flame Temperature and Volume of Combustion Gases

"Natural" draft is actually thermal draft and occurs when gases that are heated expand so that a given volume of hot gas will weigh less than an equal volume of the same gas at a cool temperature. Since hot combustion gases weigh less per volume than room air or outdoor air, they tend to rise. The rising of these gases is contained and increased by enclosing the gases in a tall chimney. The vacuum or suction that you call "draft" is then created through this column of hot gases.

"Currential" draft occurs when high winds or air currents across the top of a chimney create a suction in the stack and draw gases up. "Forced mechanical" draft is the force that is exerted by the burner fan which passes gases up the chimney.

There are three factors which control how much draft a chimney can make:

a) The height of the chimney - the higher the chimney, the greater the draft.
b) The weight per unit volume of the hot combustion products - the hotter the gases, the greater the draft.
c) The weight per unit volume of the air outside the home - the colder the outside air, the greater the draft.

Since the outside temperatures and flue gas temperature can change, the draft will not be constant. When the heating plant starts up, the chimney will be filled with cool gases. After the heating plant has operated for a while, the gases and the chimney surface will be warmer, and the draft will increase. Also, when the outside air temperature drops, the draft will increase. To indicate the size of these changes, the information in Table 7 was determined for a 20-ft high chimney. You can see that the draft produced by this chimney could be expected to vary from 0.011 to 0.136 inch of water. The high draft is over 12 times more than the low draft. This large variation cannot be tolerated for the following reasons:

a) Too little draft can reduce the combustion air delivery of the burner and can result in an increase in the production of smoke.
b) Excessively high draft increases the air delivery of the burner fan and can increase air leakage into the heating plant, reducing carbon dioxide and raising stack temperature, resulting in reduced operating efficiency.
c) High draft during burner off periods increases the standby heat losses up the chimney.

Table 7
Example of Draft Changes in a Chimney

CONDITION	OUTSIDE TEMPERATURE, DEGREES F	CHIMNEY TEMPERATURE, DEGREES F	DRAFT (INCHES) CARBON DIOXIDE
Winter start-up	20	110	0.050
Winter operation	20	400	0.136
Fall start-up	60	80	0.011
Fall operation	60	400	0.112

To understand why varying draft causes these problems, you should bear in mind that the air pressure (positive draft) caused by a burner fan averages about 0.25 inch of water in the air tube. If the combustion chamber has a draft of 0.10 inch of water and the burner fan provides a pressure of 0.25 inch of water, the total force causing air to flow will be a 0.35 inch of water. If the combustion chamber draft drops to 0.01 inch of water, the total pressure becomes 0.25 + 0.01 = 0.26 inch of water. This is a reduction in draft of about 25 percent which will cause a similar reduction in the amount of air flowing into the combustion chamber. Remember what happens when the excess air is not properly adjusted? The burner will very likely smoke as a result of this change. It is for this reason that the proper draft should be obtained before the air adjustment is set.

Because draft will not exist to any great amount during a cold start-up, the burner should not depend on the additional combustion air caused by draft. The best way to be sure the burner does not depend on this air to set the burner for smoke-free combustion with a low overfire draft (0.01 to 0.02 inch of water). If a burner cannot produce good smoke-free combustion under low draft conditions, there is something wrong with the burner and it should be corrected. Using a high draft setting to obtain enough combustion air for clean burning is like depending on a crutch, which is not always there. A burner which gives clean combustion only with high draft will cause smoke and soot any time the chimney is not producing high draft.

3.6.1 Draft Regulators. From the previous information, you should realize that a constant draft is needed and this draft should be no more than that which will just prevent escape of combustion products into the home. Since natural draft as obtained from a chimney will vary, it is necessary to have some sort of regulation. The normal draft regulator for home heating plants is the so-called by-pass, or air bleed, type as shown in Figure 33.

This type of regulator is simply a swinging door which is counterweighted so that any time the draft in the flue is higher than the regulator setting, the door is pulled in. When the door is pulled in, it allows room air to flow into the flue and mix with the combustion gases. Because the room air is much cooler than the flue gases, it cools them. Then the cooler gases fill the chimney, there is less temperature difference between the chimney gases and the outside air and less draft is produced. If the draft is less than the regulator setting, the counterweight keeps the swinging door closed and only flue gas flows into the chimney. This gives the highest draft possible under those conditions.

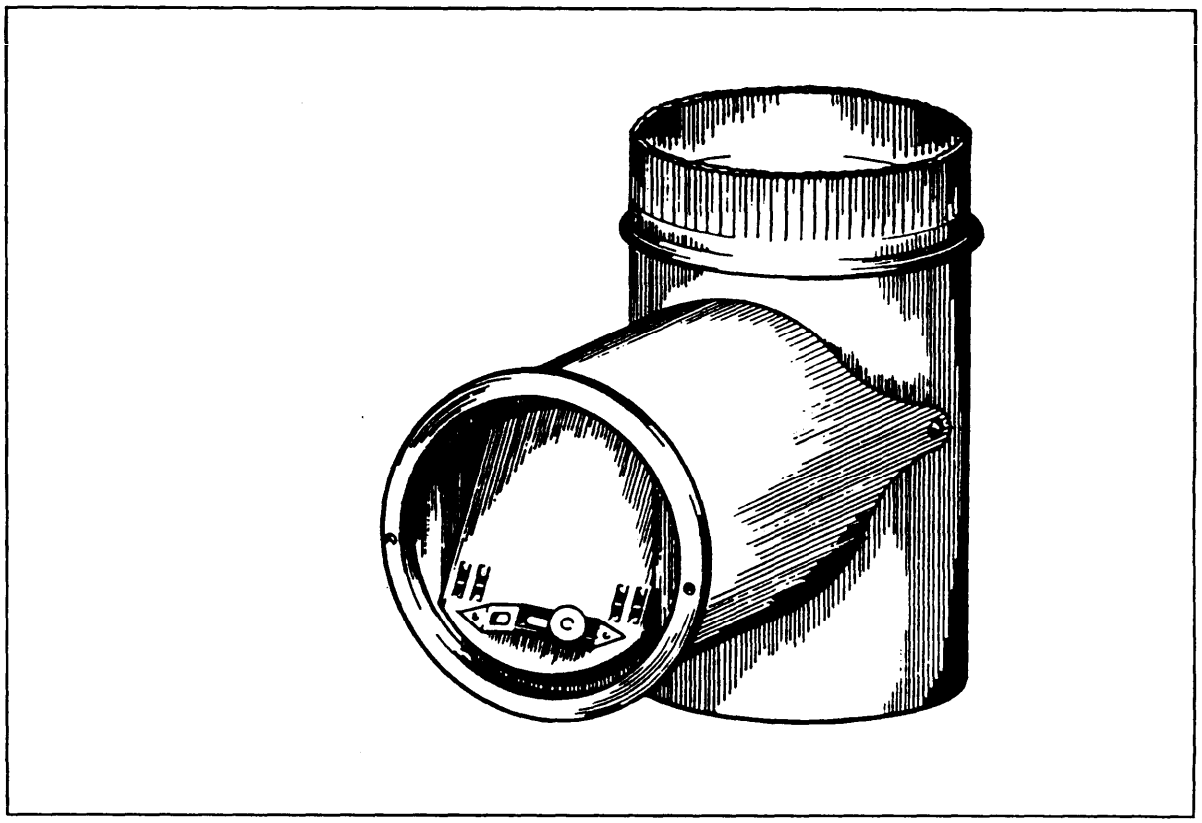

Figure 33
Draft Regulator

It is important to understand that the function of a draft regulator is to maintain a stable or fixed draft through the heating equipment within the limits of available draft of the chimney by means of an adjustable barometric damper. Draft can be measured by using a draft gauge. It cannot be estimated or "eye balled." The draft should be checked at two different locations in the heating plant:

a) over the fire which indicates firebox draft condition and
b) draft in the breech connection.

3.6.1.1 Draft Over the Fire. The draft over the fire is the most important and should be measured first. The overfire draft must be constant so that the burner air delivery will not be changed. The overfire draft must be at the lowest level which will just prevent escape of combustion products into the home under all operating conditions. Normally an overfire draft of 0.01 to 0.02 inch of water will be high enough to prevent leakage of combustion products and still not cause large air leaks or standby losses.

If the overfire draft is higher than 0.02 inch the draft regulator weight should be adjusted to allow the regulator door to open more. If the regulator door is already wide open, a second regulator should be installed in the stack pipe and adjusted. If the draft is below 0.01 inch the draft regulator weight should be adjusted to just close the regulator door. Do not move the weight more than necessary to close the door. Never wire or weight a regulator so it cannot open. There may be times when the outside air is colder, or the chimney hotter, and the draft needs regulation.

The overfire draft is also affected by soot buildup on heat exchange surfaces. As the soot builds up, the heat exchange passages are reduced and a greater resistance to the flow of gases is created. This causes the overfire draft to drop. As the overfire draft drops, the burner air delivery is reduced and the flame becomes even more smoky. It is a vicious cycle which gets increasingly worse.

3.6.1.2 Draft at the Breech Connection. After the overfire draft is set, the draft at the breech connection should be measured. The breech draft will normally be slightly more than the overfire draft because the flow of gases is restricted (slowed down) in the heat exchanger. This restriction, or lack of it, is a clue to the design and condition of the heat exchanger. A clean heat exchanger of good design will cause the breech to be in the range of 0.03 to 0.06 inch when the overfire draft is 0.01 to 0.02 inch.

3.6.2 Flue and Chimney Exhaust. The flue pipe should be the same size as the breech connection on the heating plant. For modern oil designed heating plants, this should cause no problem in sizing the flue pipe. The sizes generally are 6 inches under 1 GPH, 7 to 1.50 GPH and 8 for 1.50 to 2.00 GPH. The flue pipe should be as short as possible and installed so that it has a continuous rise from the heating plant to the chimney. Elbows should be minimized and the pipe should be joined with metal screws and straps.

The draft regulator should be installed in the flue before the chimney and after the primary control, if one is used. Make sure the draft regulator is at least as large as the flue pipe diameter. Table 8 gives recommended size and height for chimneys based on BTU input. Table 9 and Figure 34 list common chimney problems and their corrections.

3.7 Fuel Oil Burners. Figure 35 shows a pedestal oil burner which is similar to many which are used on a variety of furnaces or boilers. The motor (1,725 or 3,450 rpm) drives a fan and a fuel pump. The fan draws in the combustion air which will be mixed with the atomized fuel oil. The pump draws

the fuel to the burner, and supplies sufficient pressure (300 to 1,000 psi) that the oil can be pushed through an atomizing nozzle. Once the fuel oil is atomized, it may easily be lighted. Figure 36 shows an oil nozzle producing a fine oil spray, a pair of electrodes are used to ignite the oil. These electrodes are positioned so that there is a 1/8 inch air space between the ends. The control system applies a high voltage of 10,000 volts or more, creating a spark between the electrodes. The position of the electrodes relative to the cone formed by the oil spray is important. It must not be within the oil spray to prevent the oil residue from bridging between the electrodes. But it must be close enough that the primary air stream blows the arc into the spray. The ends of the electrodes should have a pointed shape, but not to the point of being sharp. The ends of the electrodes will gradually disappear due to the high voltage spark.

Table 8
Recommended Size and Height for Chimneys

GROSS BTU INPUT	RECTANGULAR TILE (INCHES)	ROUND TILE (INCHES)	MINIMUM HEIGHT (FEET)
144,000	8 1/2 X 8 1/2	8	20
235,000	8 1/2 X 13	10	30
374,400	13 X 13	12	35
516,000	13 X 18	14	40
612,200	-	15	45
768,000	18 X 18	-	50
960,000	20 X 20	18	55

Table 9
Common Chimney Troubles and Their Corrections

KEY	TROUBLES	EXAMINATION	CORRECTIONS
A	Top of chimney lower than surrounding objects.	Observation.	Extend chimney above all objects within 30 feet.
B	Chimney cap or ventilator.	Observation.	Remove.
C	Coping restricts opening.	Observation.	Make openings as large as inside of chimney.
D	Obstruction in chimney.	Can be found by light and mirror reflecting conditions in chimney.	Use weight to break and dislodge.
E	Joist projecting into chimney.	Lowering a light on extension cord.	Must be handled by a competent brick contractor.
F	Break in chimney firing.	Smoke test-build smudge fire blocking off other opening, watching for smoke to escape.	Must be handled by a competent brick contractor.
G	Collection of soot at narrow space in flue opening.	Lower light on extension cord.	Clean out with weighted brush or bag or loose gravel on end of line.
H	Offset.	Lower light on extension.	Change to straight or to long offset.
I	Loose-seated pipe in flue opening.	Smoke test.	Leaks should be eliminated by cementing all pipe openings.
J	Smoke pipe extends into chimney.	Measurement of pipe from within or observation of pipe by means of lowered light.	Length of pipe must be reduced to allow end of pipe to be flush with inside of tile.

Table 9 (Continued)
Common Chimney Troubles and Their Corrections

KEY	TROUBLES	EXAMINATION	CORRECTIONS
K	Two or more openings into same chimney.	Found by inspection from basement.	The least important opening must be closed using some other chimney flue.
L	Failure to extend the length of flue partition down to the floor.	By inspection or smoke test.	Extend partition to floor level.
M	Loose-fitted clean-out door.	Smoke test.	Close all leaks with cement.

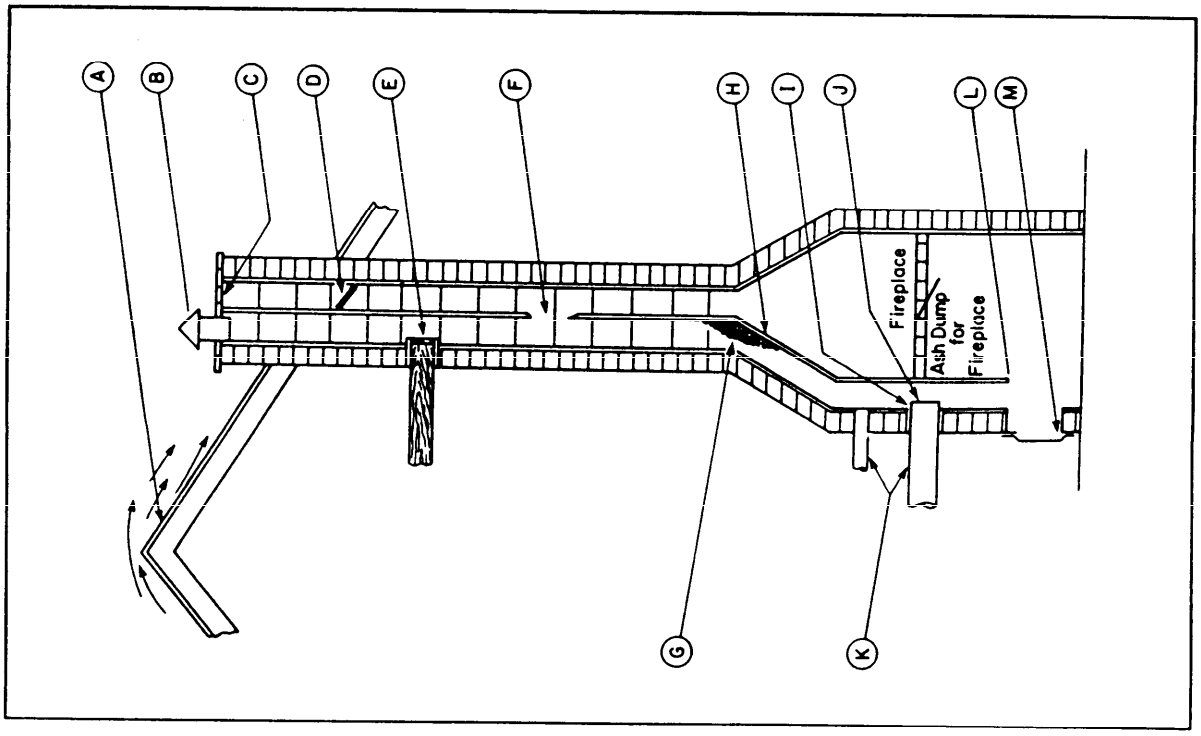

Figure 34
Diagram of Common Chimney Troubles

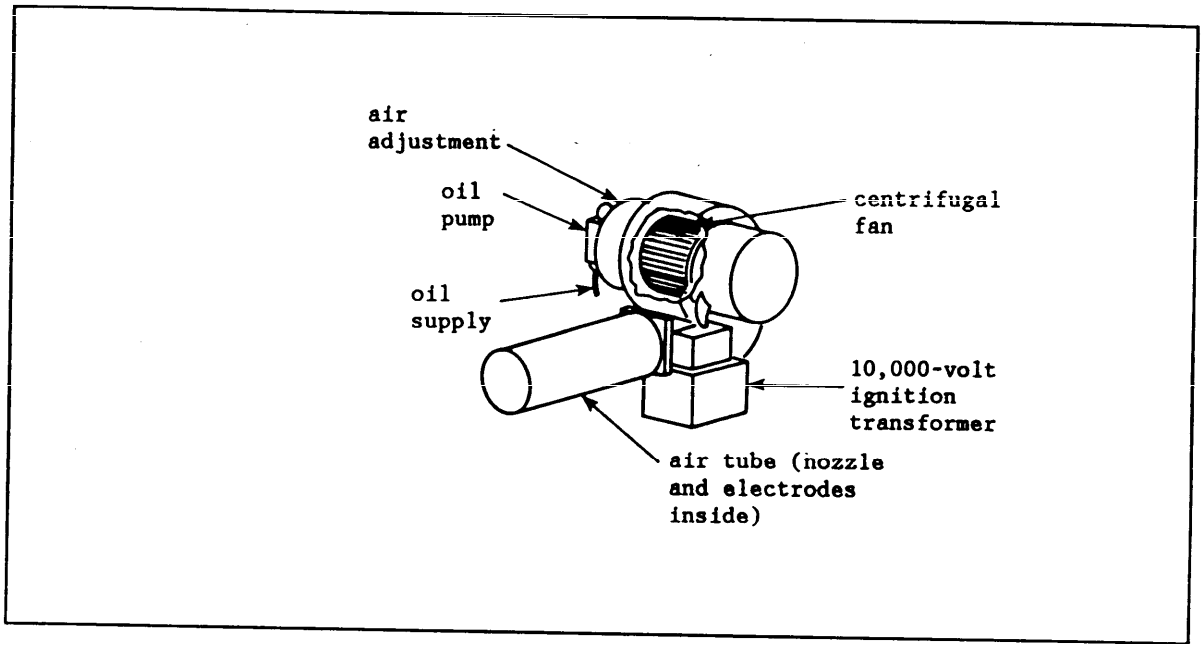

Figure 35
Oil Burner for Residential Use

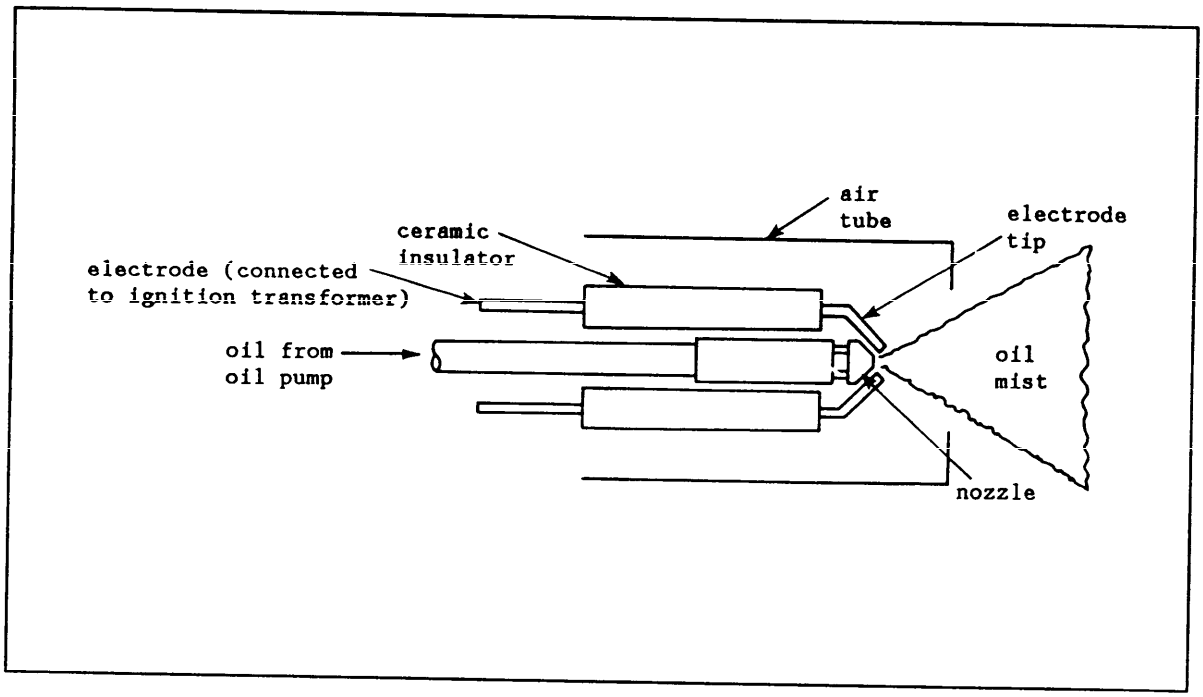

Figure 36
Atomization and Ignition of Fuel Oil

They may be reshaped with a file and bent to adjust the gap to 1/8 inch. The nozzle and pair of electrodes, insulated with ceramic, is called the oil gun assembly.

Once the oil flame has been established, the ignition spark may remain on, or it may turn off depending on the manufacturer. Those which remain on are called "continuous ignition." Where "intermittent ignition" is used, the flame itself provides sufficient heat to burn the entering fuel and keep the chain reaction going.

The 10,000-volt supply to the electrodes is provided by the ignition transformer (Figure 37). It is a step-up transformer, using 115 volts as the input voltage. The connection from the transformer to the electrodes may be either through a buss bar connection or snap-on terminals.

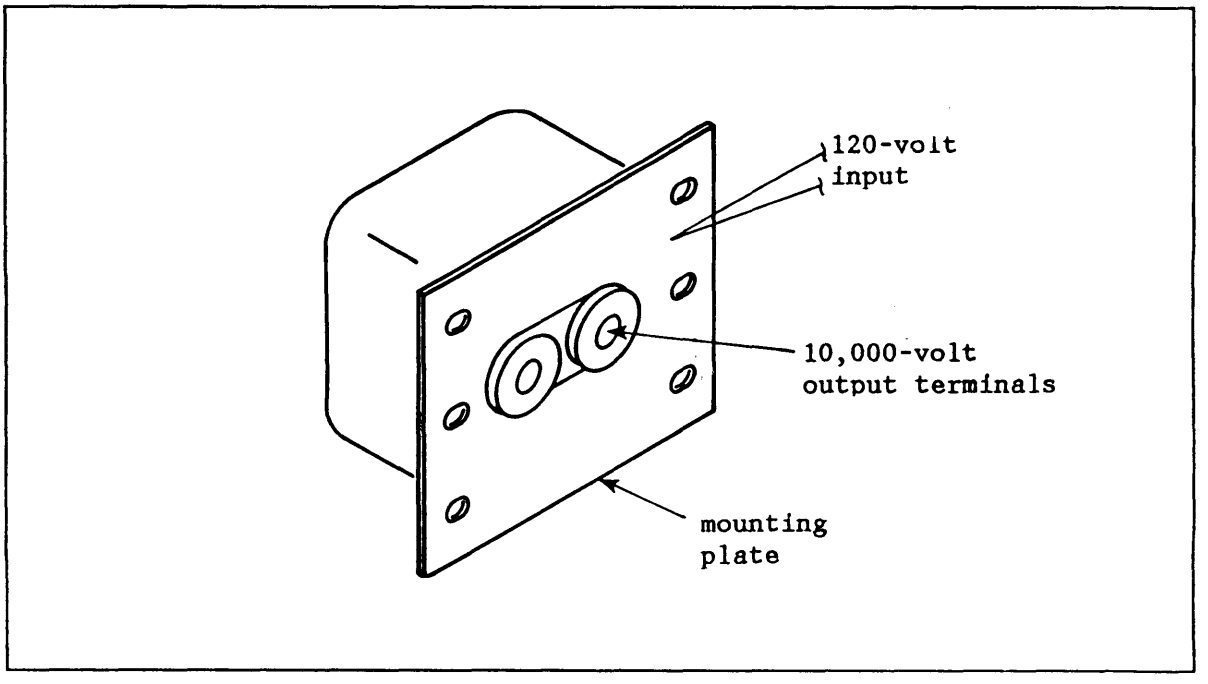

Figure 37
Ignition Transformer

3.7.1 Flame-Retention Burners. An advancement in burner design that has evolved within the past 15 years is the flame retention head. The flame retention head end cone provides a modified air flow pattern and improved burner performance. A picture of one type of flame retention head burner is shown in Figure 38. Note that the end design is quite different from older style burners. The improved design produces a swirling air pattern with some recirculation of combustion products for improved fuel-air mixing. The flame stabilizes near the burner head and that is where the name "flame-retention" originates.

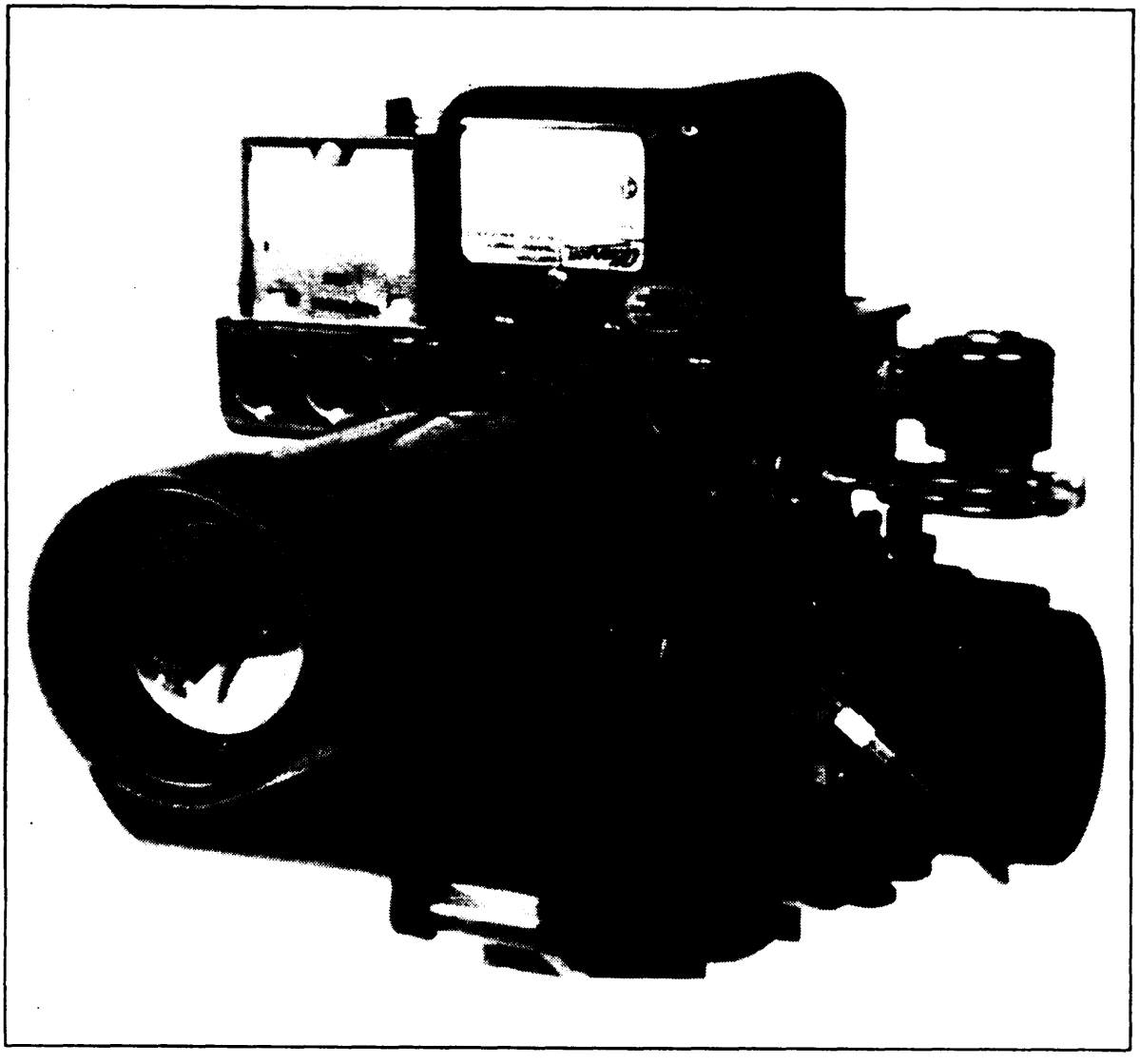

Figure 38
Flame Retention Oil Burner

Several companies manufacture these burners and some of the design details differ slightly. The general flame retention concept is similar, however, and it represents a significant improvement over earlier burner designs.

The intensity of fuel and air mixing is largely dependent upon the velocity and swirl of the combustion air. Modern burners that use the flame retention principle produce high intensity mixing that provide very stable well-defined flames. In contrast to this, some burners of older design do not produce intense mixing but operate instead with lazy, diffuse flames. A comparative illustration is shown in Figure 39.

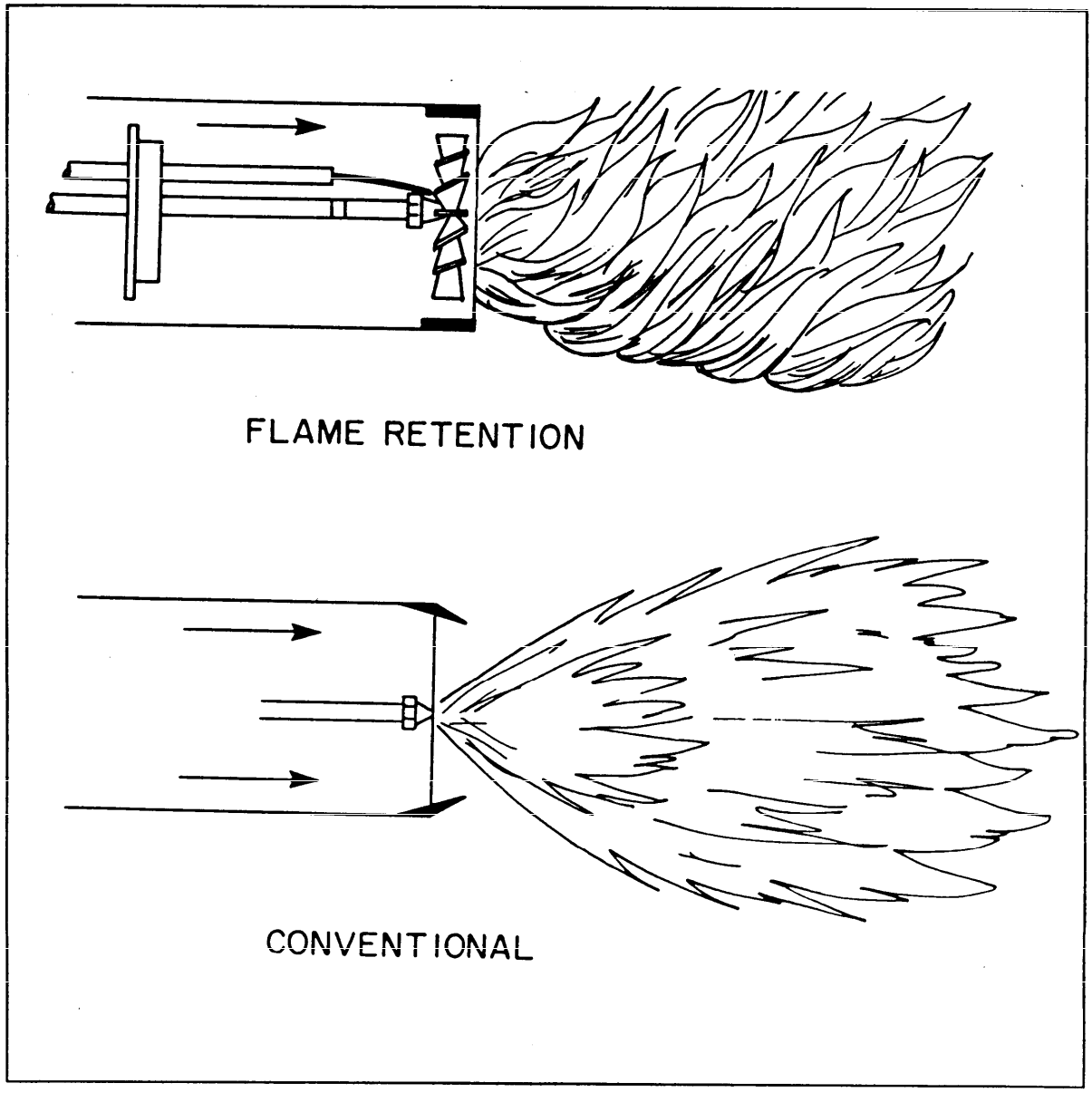

Figure 39
Conventional and Retention Head Flames

The improvement of fuel air mixing provided by flame retention head burners is evident from performance i.e., low smoke numbers and high levels of carbon dioxide in the combustion product gases. Typical retention head burners can produce a 10 to 13 percent carbon dioxide with a zero to number one smoke. Older burners using stabilizers and end cones reach only seven to nine percent carbon dioxide with marginal smoke levels.

Selection of a flame retention head burner to replace an old oil burner is not a simple task, and careful attention to detail is required to assure safe and efficient operation. Important questions to consider are:

a) Is a new burner needed?
b) Can the efficiency of the existing burner be improved?
c) Should other modifications be considered first?
d) Can the existing boiler or furnace handle the higher flame temperatures associated with flame retention head burners?
e) Are there other important considerations?

The efficiency of the existing heating unit must be measured to determine possible fuel savings with the new burner. The original system should be adjusted to peak efficiency (and acceptable smoke number) before the fuel saving is estimated. Setting the draft damper, replacing fuel nozzles, adjusting combustion air, eliminating air leaks, and cleaning heat exchange surfaces are some of the measures that can improve the performance of the existing burner-boiler or burner-furnace. If the flue loss efficiency of the tuned heating unit is less than 75 percent, then a flame retention burner is advisable in many cases.

Inspection of the combustion chamber and heat exchanger is necessary to determine if the unit can tolerate higher temperature. Remedial steps may be required. Any other specific factors that may effect the choice of a flame retention burner should be considered.

3.7.1.1 Function of Flame Retention Burners. The basic design of a flame retention burner is similar to other pressure atomizing burners. The main difference is the way in which fuel and combustion air are mixed, and this is controlled through careful design of the burner end cone (burner head). The flame retention head has a smaller area through which air can flow and the resulting flow pattern allows more efficient operation. The other components of flame retention burners (fuel pump, nozzle, electrodes, transformer) often are the same as non-flame-retention types. One other difference is frequent use of 3450 rpm motors instead of 1725 rpm to overcome the pressure drop through the retention head, but this is not a requirement for flame retention.

Flame retention burners can improve boiler or furnace efficiency in two ways. Flue heat loss during burner operation can be lowered, and off-cycle heat loss may be reduced.

Excess air reduces efficiency, and flame retention burners usually operate with less excess air than older burner designs. Flame retention types require 20 to 30 percent excess air, while older burners need 50 to 100 percent or more to achieve low smoke numbers. The difference in flue heat loss for these burners is about 10 percentage points. This translates into a fuel saving of more than 10 percent.

The second advantage of flame retention burners is their tendency to reduce off-cycle heat loss while the burner is idle. The flow of off-cycle air

through the heating unit is reduced by the restrictive design of the flame retention head, and off-period heat loss is less. This improves the annual fuel utilization efficiency. The magnitude of on-cycle and off-cycle savings depends on the design of the burner and boiler or furnace combination.

3.7.1.2 Adverse Effects of Flame Retention Burners. Flame retention head burners do not present the reliability problems that are sometimes associated with new energy saving add-ons because these burners have been available for more than a decade. Many burner components are the same as older oil units that have been used for several decades. Therefore, few problems are expected by wider use of retention head burners. One area that must be considered by installers, however, is the possible imcompatibility with some older heating units. These boilers and furnaces may not have been designed for the higher flame temperatures produced by new burners, and modification of the combustion chamber may be required.

Retention head burners operate with higher flame temperatures that can be 600 degrees F hotter than older burners. The higher temperature is caused by reduced excess air and contributes to higher system efficiency. Higher temperature combustion gases transfer their heat more rapidly to the boiler water increasing thermal efficiency. Remember too, that reducing excess combustion air (producing higher flame temperature) causes flue heat loss to drop. From an efficiency point of view, high combustion gas temperatures are desirable.

Most new boilers and furnaces can accommodate higher combustion temperatures, and flame retention burners are used in almost all of them. Unfortunately, this is not true for all older heating units. Raising the temperature of combustion can pose problems including burn-out of combustion chambers or heat exchangers in extreme cases. The judgement of experienced service personnel is important to eliminate safety hazards.

Several precautions should be considered whenever older heating units are retrofitted with new burners. The best decision from an efficiency viewpoint is to replace the entire heating unit, with a new burner-boiler or burner-furnace. This will provide maximum fuel savings and the fewest problems.

Another solution is to reline older combustion chambers with high temperature refractory inserts. These are available in moldable (Wet-Pak) form or similar combustion chamber liners which can be installed in the field and reduce the chance of chamber problems. Also, reducing the firing rate (fuel nozzle size) may lessen the undesired effects of high combustion temperatures.

Finally, increasing excess combustion air reduces flame temperatures, but also reduces fuel savings. Dry-base boilers and older warm air furnaces are prime candidates for this approach. For those cases a maximum carbon dioxide concentration of about 10 percent (or about 50 percent excess air) may be acceptable. Fuel savings will be lowered by increasing excess air, so this is not a general recommendation for all systems.

Careful attention by experienced servicemen is required for proper use of all retrofit improvements, and safety is the primary consideration in all cases. Safe operation must never be compromised for gains in efficiency.

3.8 Burner Motor. The burner motor may be either split phase or capacitor start. Residential burners will most commonly use either 1/6 hp or 1/8 hp split phase. Manual overload protection is required, with the reset button provided on the motor housing. The combustion air blower is fastened directly to the motor shaft. The fuel pump (Figure 40) may be either directly coupled to the opposite end of the motor shaft, or it may be belt-driven. The belt drive arrangement for the pump is commonly used on the 3,450-rpm motors to allow the pump to run at 1,725 rpm.

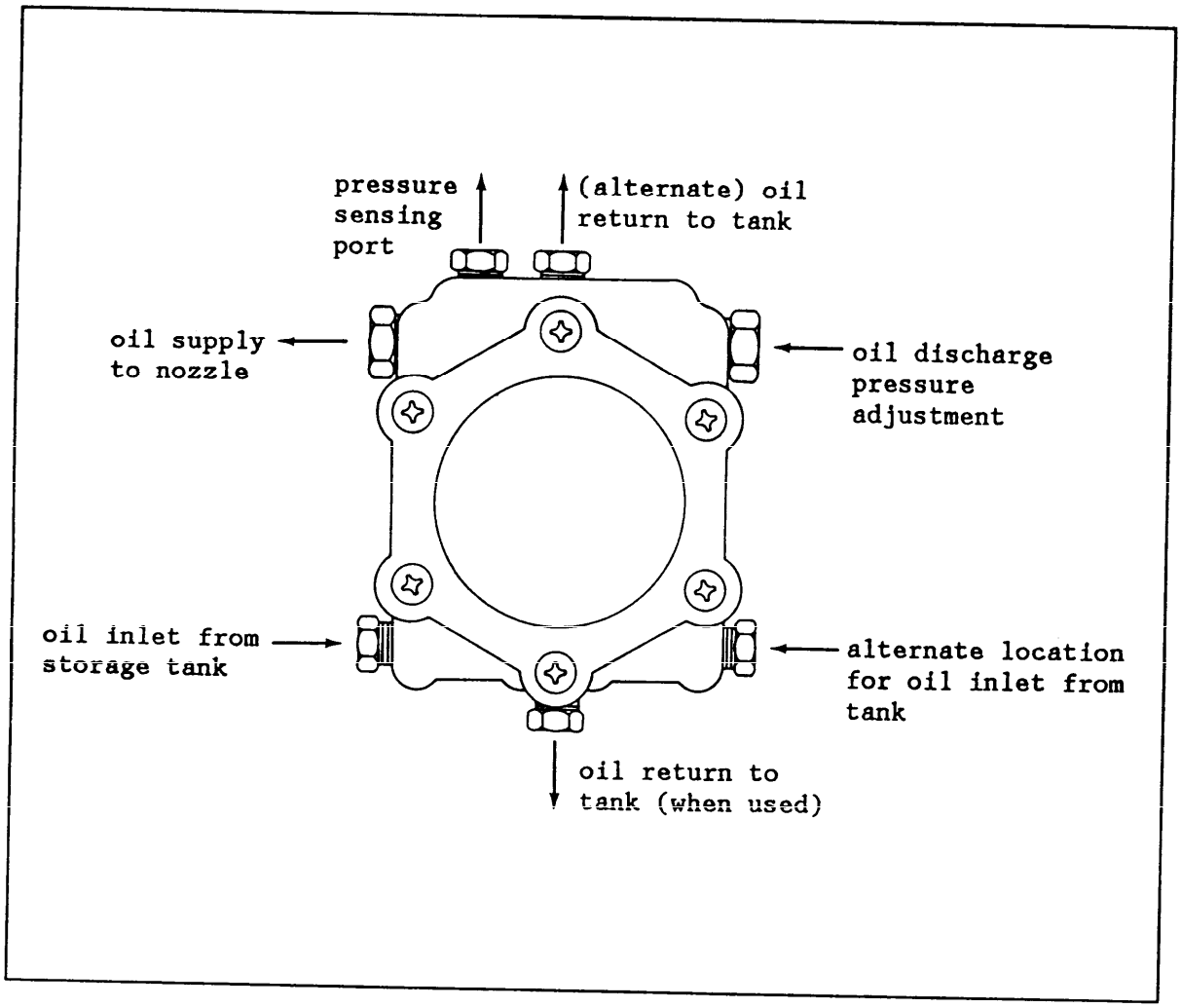

Figure 40
Fuel Oil Pump

3.8.1 Primary Controls. All the control for the oil burner is centered in a "black box" called a primary control. It may also be referred to as a stack control. The function of the primary control is:

a) On a call for heat from the thermostat, start the burner motor and energize the ignition transformer.
b) When the oil flame has been established, turn off the ignition transformer (intermittent ignition only).
c) If the oil flame has not been established within a specified time (usually around one minute), shut-down the burner motor. In this case, the system will not automatically recycle. The reset button on the primary control must be reset before a new trial for ignition may proceed.
d) When the thermostat is satisfied, the primary control turns off the burner motor and the ignition transformer (continuous ignition models).
e) In the event of a power failure or a flame failure for any other reason, some models will allow the fan to run for one minute (scavenging period) to remove fumes in the fire box, and then make one attempt to restart.

There are several ways in which the primary control determines if the trial for ignition has been successful. The primary control shown in Figure 41 has a heat sensing element which senses flue gas temperature. This controller is mounted directly on the flue stack, hence it is sometimes called a stack controller. Stack controllers are also available in two pieces. One piece is mounted on the stack, and the rest of the control is mounted elsewhere. The stack sensing switch may actually be two switches. They are called the hot switch and the cold switch.

Non-stack-mounted controllers use a remote flame sensing device. Most common of these for residential use is the cadmium sulfide cell, or cad cell (Figure 42).

3.8.2 Cadmium Cell Flame Detectors. The cad cell is a light sensitive device which is mounted so that it can "see" the oil flame (Figure 43). The characteristic of the cad cell is that it has a very high resistance when it sees darkness. When it sees light, its resistance becomes very low, and it therefore behaves like a switch in the primary control circuit. The cadmium cell will not react to just any light. For example, while it will react to an oil flame, it will not react to the wavelength of the light which is emitted from a well-adjusted gas flame.

A burner which is properly adjusted will cause the cad cell to have a resistance of between 300 and 1,000 ohms. Higher resistance could mean that the burner is poorly adjusted, or that the cad cell needs to be cleaned.

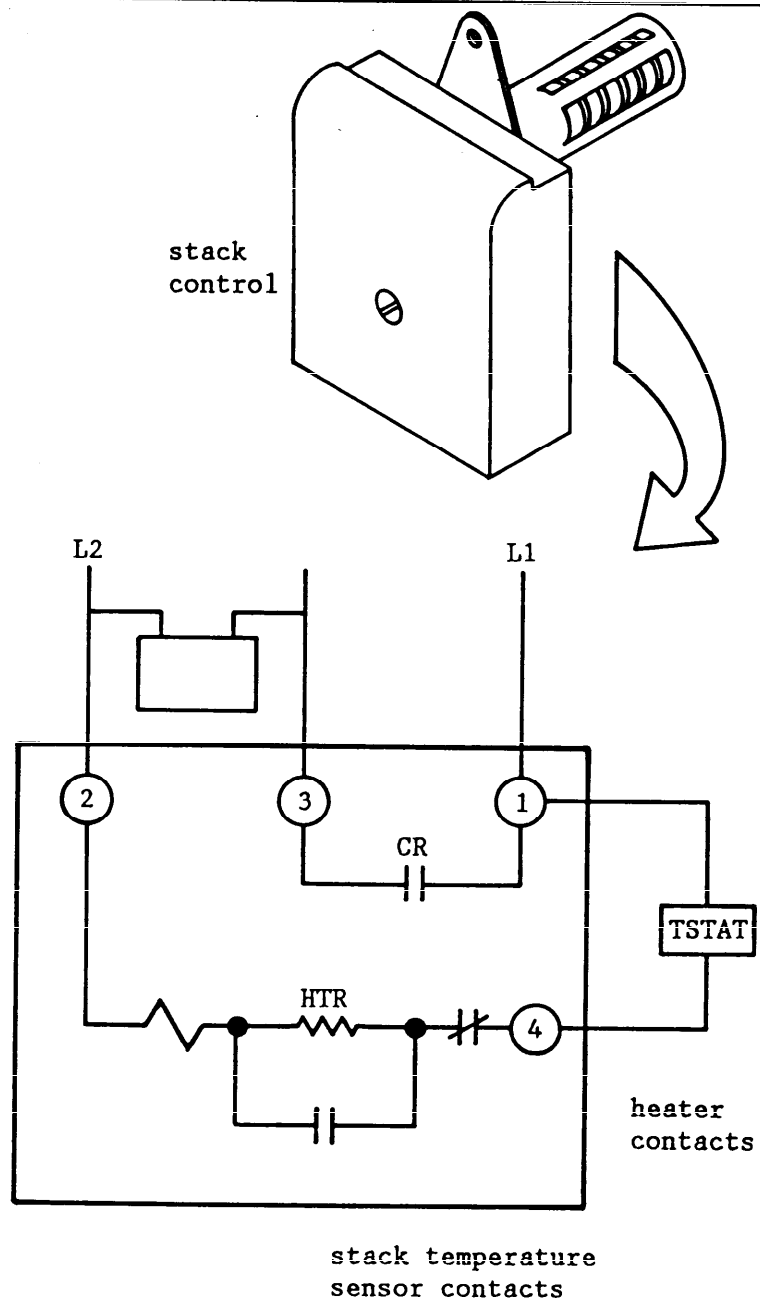

In order for the oil burner to become energized, the stack temperature sensor contacts must close, energizing the control relay and shorting out the heater.

Figure 41
Stack-Mounted Primary Control

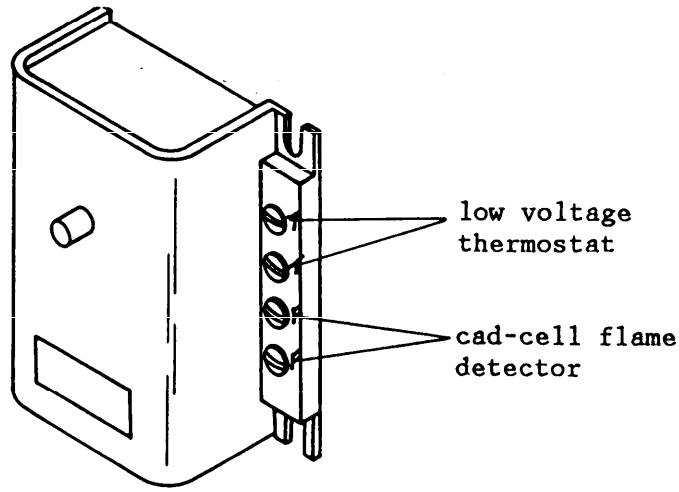

A low-voltage thermostat is wired to the T-T terminals.
A cad-cell flame detector is wired to the F-F terminals.

Figure 42
One Piece Primary Control

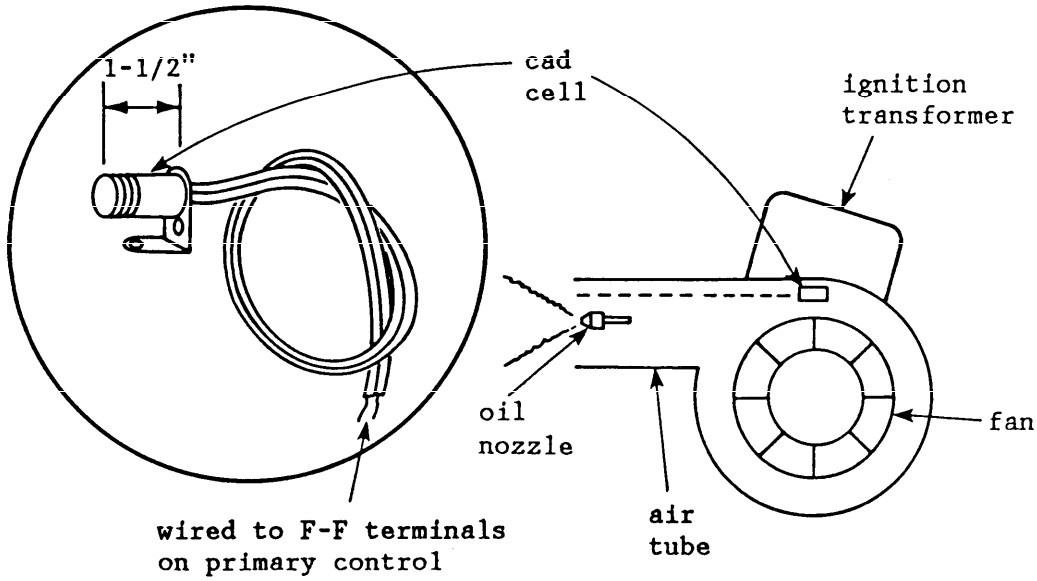

Figure 43
Cad-Cell Used to Prove Flame to Primary Control

The cad cell is located so that it is cooled by the combustion air. The cad cell must be kept at a temperature below 140 degrees F. The two wires from the cad cell will be connected to terminals F - F on the primary control (flame). On older controls, the terminals may be labeled S - S (sensor).

3.8.3 Stack Detector. The stack detector is located where it will be able to sense heat when the oil flame is established. Usually, this is on the flue stack, but it may also be found on the front of the furnace above the combustion chamber. In any event, it must be mounted ahead of any draft regulator (which would dilute the heat). If it is mounted in an elbow in the flue stack, it should be on the outside of the elbow.

The stack detector may have two wires or three wires. The two-wire model has a single switch which is normally closed. When the sensor detects heat, the switch opens.

The three-wire detector contains two switches (Figure 44). In the cold starting position, the switch between R and B is closed. On a temperature rise, R to B will open, and R to W will close. While the sensor element is heating, you may find both switches to be open, or both switches to be closed simultaneously.

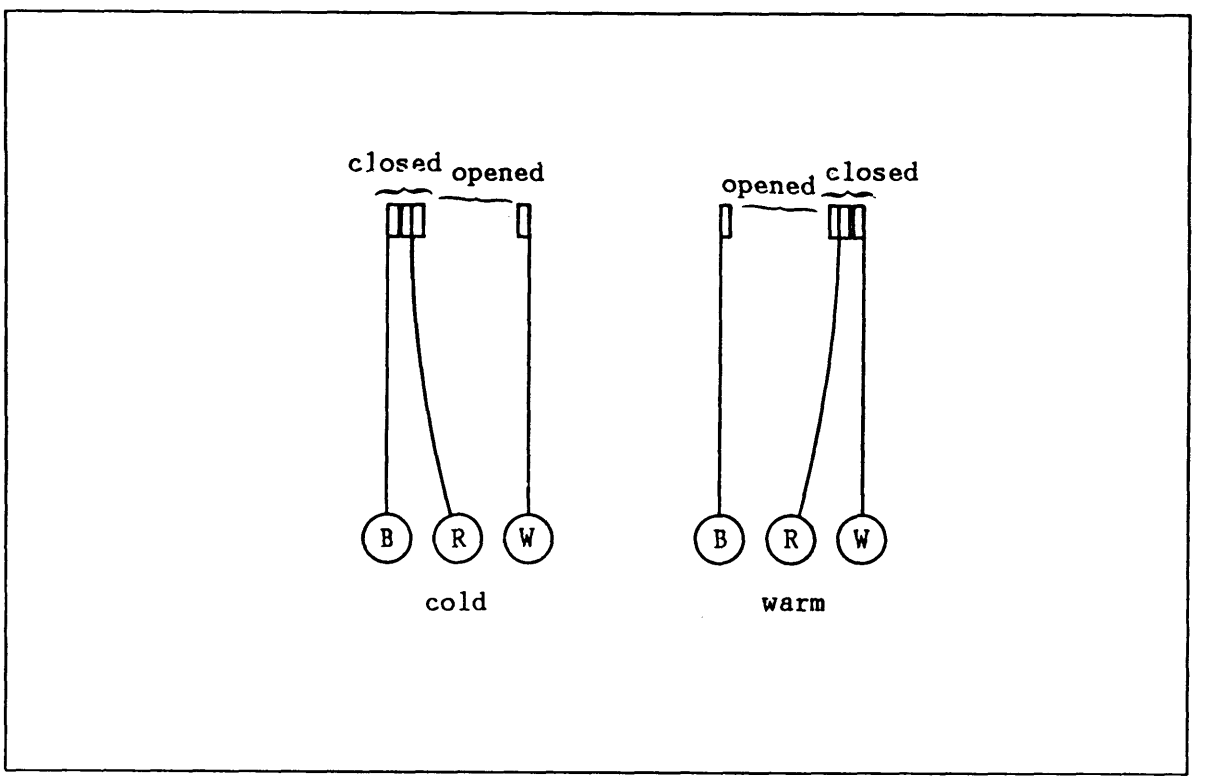

Figure 44
Switching Action of a Three-Wire Stack Switch

3.8.4 Stepping the Stack Control. One popular stack controller uses a friction clutch which is mounted on a rod connected directly to the heat actuated element. It is this clutch which operates the hot and cold contacts. If the clutch has slipped, the cold contacts will not be closed. Without the closed cold contacts, the burner cannot start. For other types (see figures on controllers), the cold contact can be placed in the closed position by pulling a lever on the drive shaft outward about 1/4 inch, and then releasing it.

3.8.5 Checkout Procedure. In order to determine that a new or existing system is operating properly, the function of the controller must be checked. With the burner operating, a flame failure can be produced by shutting off the fuel oil supply hand valve. Recycle models will shut down the burner, and then attempt one restart before locking out. Other models maintain ignition until the burner locks out on safety in the safety switch timing.

3.9 Flue Gas Measurement and Flue Loss Efficiency. This section covers the proper use of instruments to measure the flue loss (steady-state) efficiency of residential oil-fired heating plants. Effective use of these instruments can aid in improving the steady-state efficiency of heating plants. Perhaps it is customary to adjust burners by judging the flame by eye or following a series of "rules of thumb." Certainly, using these procedures can work some of the time. This is similar to a doctor diagnosing an illness without the use of a stethoscope or an auto mechanic tuning a car without a timing light or dwell meter. It is a risky business! Do yourself a favor, make your job easier, and assure yourself of leaving a heating plant in good operating condition by properly using the instruments discussed in this chapter.

3.9.1 Stack Loss Theory. The steady-state efficiency is a measure of the effectiveness of the heating unit in extracting heat from the chemical energy in the fuel and transferring it to the distribution medium. Therefore, the most straightforward approach to measuring the steady-state efficiency would be to measure the heat transferred to the distribution medium and the chemical energy in the fuel and then calculating the efficiency from these values. Unfortunately, in a residential heating plant, it would be very difficult to measure the actual amounts of heat in the fuel and the heat transferred to the air, water, or steam. As an alternative approach, a simpler method, the "stack loss" method of efficiency measurement is used. The stack loss method is based on three assumptions:

a) All the chemical energy in the fuel is converted to heat energy. This is essentially accurate for all burners as the true combustion efficiency is normally 98 to 100 percent.

b) The chemical energy per unit of fuel is the same - 140,000 Btu/gal. This means that from one shipment of fuel to another, variations in chemical composition that affect the chemical energy per unit of fuel oil are ignored. This can lead to small errors in the stack loss method.
c) The heat energy all goes to one of two places; the heating load or, up the chimney.

3.9.1.1 Assumptions. These assumptions are shown in Figure 45. From this figure, it can be seen that by measuring the heat loss up the flue and assuming an average value for the heat energy in the oil, it is not essential to measure the heat transferred to the distribution medium. Fortunately, measuring the stack losses is not complicated. However, this assumes that there are no jacket losses or, no heat is transferred through the walls of the heating plant. From experience, this is inaccurate and that in older, largely uninsulated units, the jacket losses can be significant. As a result, the stack loss method tends to give higher efficiencies than those which really exist. To measure the heat wasted up the flue and chimney:

a) Determine the amount of the combustion gases per gallon of fuel oil burned.
b) Determine how much the combustion gas temperature was changed (the difference between the temperature at which the fuel and air entered the burner and the temperature of the combustion gases).

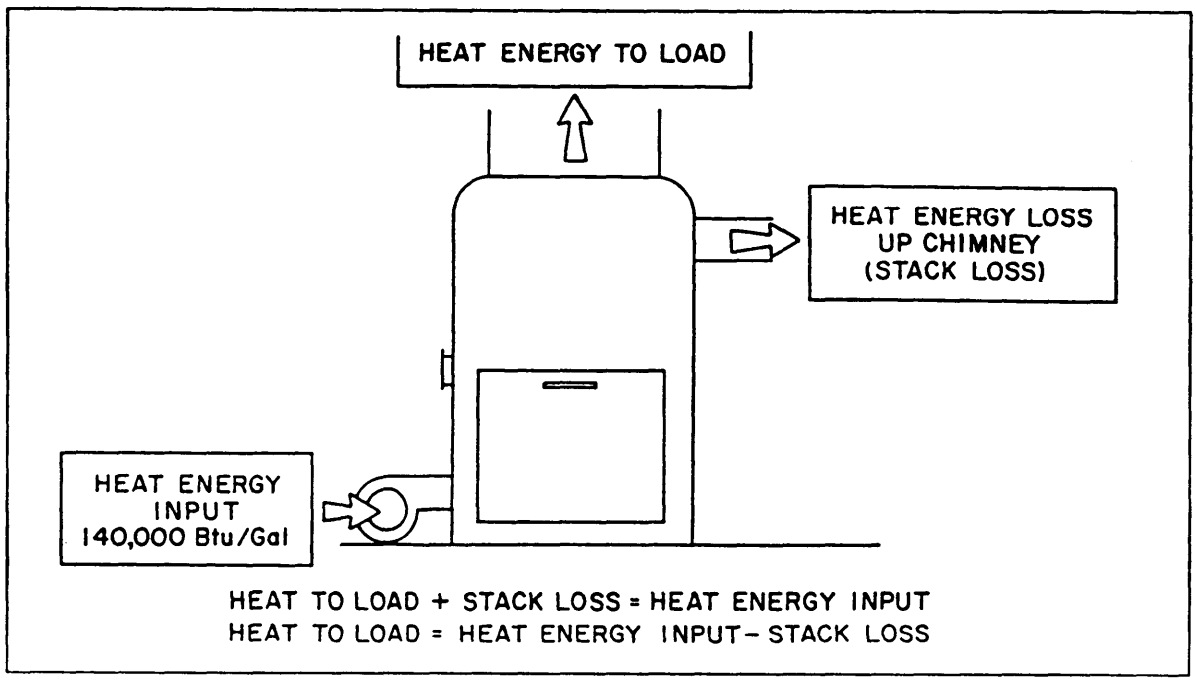

Figure 45
Distribution of Heat as Determined by the Flue Loss Method

Measure the amount and temperature of the combustion gases at an identical point in the flue pipe. Changes in volume of excess combustion air affect the heat exchanger efficiency. These changes in volume of excess air per unit of fuel burned also affect the weight of the combustion gases formed from each gallon of fuel burned. Since knowledge of the percent excess air enables us to determine the weight of the combustion gases per gallon of fuel burned, and since the percent excess air can be determined by measuring the percent carbon dioxide or oxygen, the weight of combustion gases per gallon of fuel burned can be determined by knowing the percent carbon dioxide or oxygen.

Theoretically for every pound of fuel oil exactly 14.36 pounds of air are required to completely burn the fuel. This is assuming that there was perfect mixing and that all the carbon and hydrogen in the fuel combined with the oxygen in the air to form carbon dioxide and water vapor. Exactly 3.16 pounds of carbon dioxide or 15.3 percent of the products are formed if this "perfect" situation occurred. We showed a typical case for which excess air was needed to guarantee that most of the carbon and hydrogen in the fuel would combine with oxygen to form the products. The same weight (3.16 pounds) of carbon dioxide is formed but this represents only 10.2 percent by volume of the combustion products. By measuring the percent carbon dioxide, it can be determined how much excess air exists, but also the weight of combustion products flowing up the flue pipe.

Oxygen measurements can also be used to determine the amount of excess air and in turn the amount of carbon dioxide in the flue gas. There is a direct and fixed relationship between the amount of carbon dioxide and oxygen in the flue gas as shown in Figure 46. This figure indicates that as the percent carbon dioxide increases, the percent of oxygen decreases in the flue gas. When testing for efficiency we try to obtain a low oxygen reading or high carbon dioxide reading (in both cases, low excess air).

Now we have one-half of what is needed to determine the losses up the stack. The second half is much easier. This is the temperature difference between the fuel and air going into the burner and the flue gases coming out of the heat exchanger. The fuel and air will normally enter the burner at about the temperature of the room in which the furnace or boiler is located. The temperature of the gases in the flue will vary from unit to unit but can be measured with a thermometer. The difference between the flue gas temperature and the furnace/boiler room temperature is called the NET STACK TEMPERATURE.

Once the percent carbon dioxide or oxygen and the net stack temperature is known, the steady-state efficiency based on the stack loss method can be determined. Remember that the stack loss will be determined per gallon of fuel oil burned since this is how the weight of the combustion gases was measured. Because of this, there is no need to measure the fuel input into the burner. Since we assumed that each unit of fuel oil (a gallon) contains the same amount of chemical energy (140,000 Btu), the stack loss calculated will be per each 140,000 Btu of input energy. Subtracting this percentage loss from 100 percent, what remains will be the steady-state efficiency. An efficiency

chart or table can be used which will give the efficiency based on the percent carbon dioxide and net stack temperature. (See Figure 47.) Other tables or graphs can also be used to determine the steady-state efficiency. Examples are shown in Tables 10 and 11, and Figure 48.

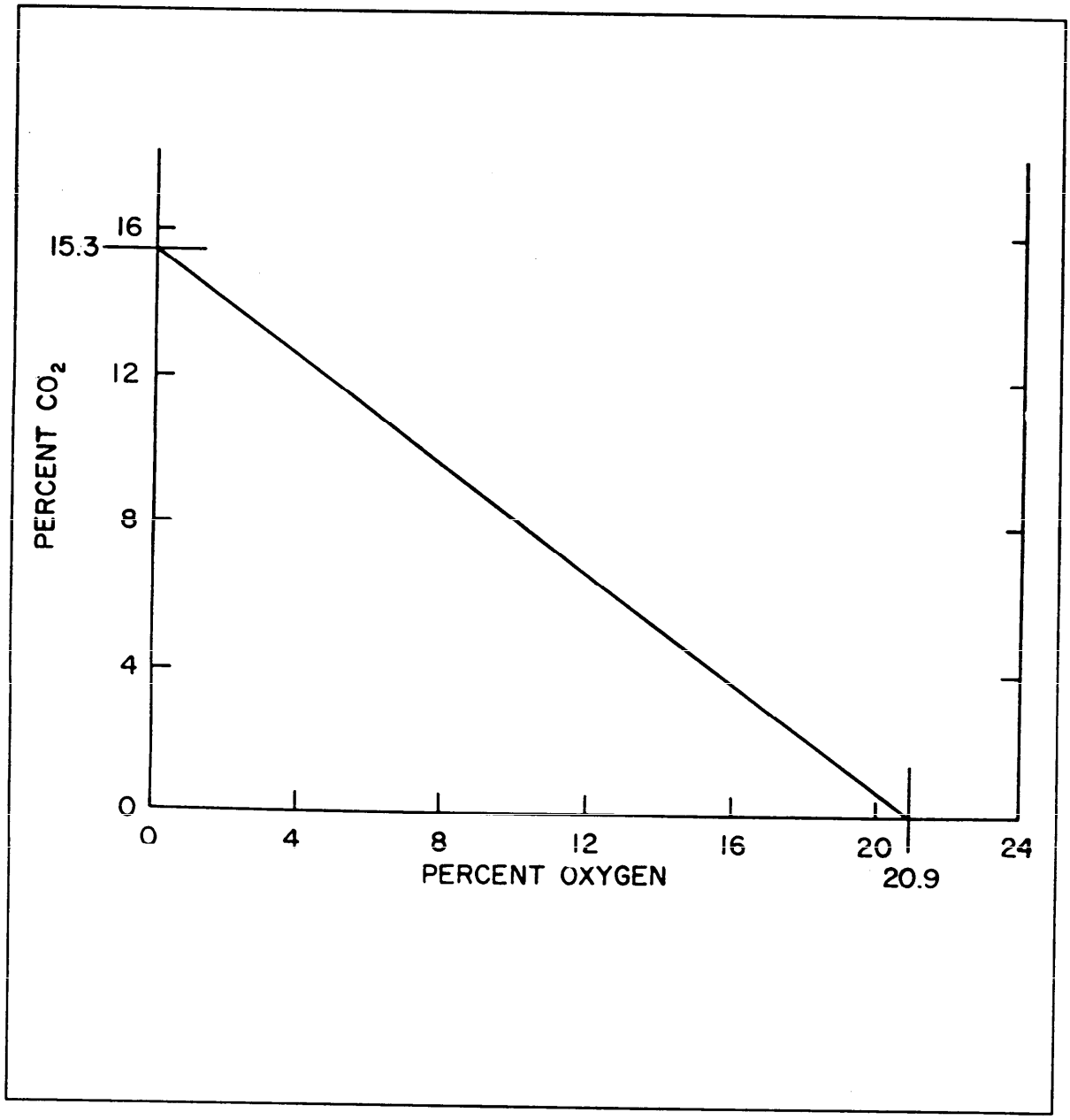

Figure 46
Theoretical Combustion Relationship Between
Carbon Dioxide and Oxygen for No. 2 Heating Oil

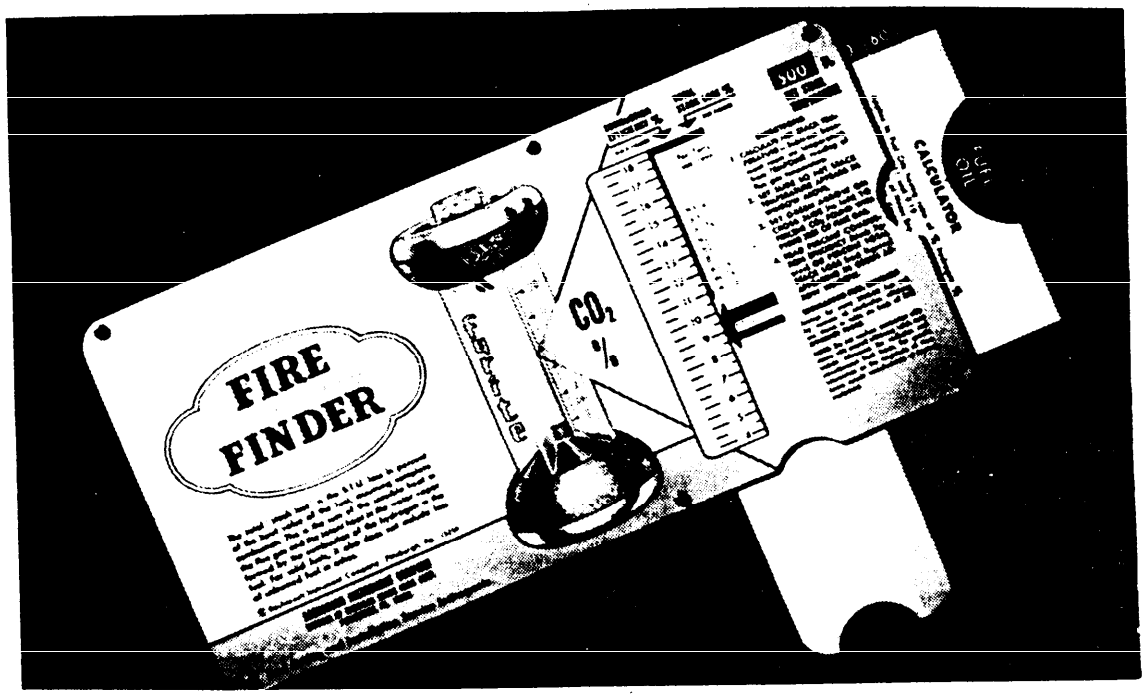

Figure 47
Bacharach Instrument Company's Fire Finder Efficiency Chart

Table 10
Efficiency Table for No. 2 Oil
(Oxygen vs Temperature)

	NET STACK TEMPERATURE (degrees F)					
	300 degrees	350 degrees	400 degrees	450 degrees	500 degrees	550 degrees
15-	75-1/2	72-1/2	69-1/2	66-1/4	63	60
14-	77-1/4	74-1/2	72/3/4	70	68	64-1/4
13-	79-3/4	77-1/4	75	72-1/2	70	67-3/4
12-	80-3/4	78-1/2	76-3/4	74-3/4	72-1/2	70-1/4
11-	82-1/4	80-1/4	78-1/2	76-1/2	74-1/2	72-1/2
10-	83	81	79-3/4	77-3/4	76	74-1/4
9-	84	82-1/4	80-3/4	79	77-1/4	75-3/4
8-	84-3/4	83	81-3/4	80-1/4	78-1/2	77
7-	85-1/2	83-3/4	82-1/2	80-3/4	79-1/4	77-3/4
6-	85-3/4	84-1/2	83	81-1/2	80-1/4	78-3/4
5-	86	85	83-3/4	82-1/4	81	79-1/2
4-	86-1/2	85-1/4	84	83	81-1/2	80-1/4
3-	87	85-3/4	84-1/2	83-1/2	82-1/4	81
2-	87-1/4	86	84-3/4	83-3/4	82-3/4	81-1/2
1-	87-1/2	86-1/2	85	84-1/4	83-1/4	82

Table 10 (Continued)
Efficiency Table for No. 2 Oil
(Oxygen vs Temperature)

	NET STACK TEMPERATURE (degrees F)						
	600 degrees	650 degrees	700 degrees	750 degrees	800 degrees	850 degrees	900 degrees
15-	56-3/4	53-1/2	50-1/4	47	43-1/2	40-1/4	36-3/4
14-	61-1/2	58-3/4	55-3/4	52-3/4	49-1/4	47-1/4	44-1/2
13-	65-1/4	62-3/4	60-1/4	57-1/2	55	52-1/2	50
12-	68-1/4	66	63-3/4	61-1/2	59	56-3/4	54-1/4
11-	70-1/2	68-1/2	65-3/4	64-1/4	62-1/4	60	58
10-	72-1/2	70-3/4	68-3/4	67	64-3/4	63	61
9-	74	72-1/4	70-3/4	68-3/4	67	65-1/4	63-1/2
8-	75-1/2	73-3/4	72-1/4	70-1/2	69	67-1/2	65-3/4
7-	76-1/4	74-3/4	73-1/4	71-1/2	70	68-1/2	67
6-	77-1/4	75-3/4	74-1/2	73	71-1/2	70	68-1/2
5-	78-1/4	77	75-1/2	74	72-1/2	71-1/4	70
4-	79	77-3/4	76-1/2	75-1/4	73-1/2	72-3/4	71
3-	79-3/4	78-1/2	77-1/4	76	74-3/4	73-3/4	72
2-	80-1/4	79	78	76-3/4	75-1/2	74-1/2	73
1-	81	79-1/2	78-3/4	77-1/2	76-1/4	75-1/4	74

Table 11
Efficiency Table for No. 2 Oil (Carbon Dioxide vs Temperature)

	NET STACK TEMPERATURE (degrees F)					
	300 degrees	350 degrees	400 degrees	450 degrees	500 degrees	550 degrees
15-	87-1/2	86-1/2	85-1/4	84-1/4	84-1/4	82
-	87-1/2	86-1/4	85	84	83	81-3/4
14-	87-1/4	86	84-3/4	83-3/4	82-3/4	81-1/2
-	87	85-3/4	84-1/2	83-1/2	82-1/2	81-1/4
13-	86-3/4	85-1/2	84-1/4	83-1/4	82	80-3/4
-	86-1/2	85-1/4	84	83	81-1/2	80-1/4
12-	86-1/4	85	83-3/4	82-1/2	81-1/4	79-3/4
-	86	84-3/4	83-1/2	82	80-3/4	79-1/4
11-	85-3/4	84-1/2	83	81-1/2	80-1/4	78-3/4
-	85-1/2	84	82-1/2	81	79-1/2	78
10-	85	83-1/2	82	80-1/2	78-3/4	77-1/4
-	84-1/2	83	81-1/2	79-3/4	78	76-1/2
9-	84	82-1/4	80-3/4	79	77-1/4	75-3/4
-	83-1/2	81-3/4	80	78-1/4	76-1/2	74-3/4
8-	83	81	79-1/4	77-1/2	75-1/2	73-3/4
-	82-1/4	80-1/4	78-1/2	76-1/2	74-1/2	72-1/2
7-	81-1/2	79-1/2	77-1/4	75-1/4	73-1/4	71
-	80-3/4	78-1/2	76-1/4	74	71-3/4	69-1/2
6-	79-3/4	77-1/4	75	72-1/2	70	67-3/4
-	78-1/2	76	73-1/2	71	68	65-1/2
5-	77-1/4	74-1/2	71-3/4	69	65-3/4	63
-	75-1/2	72-1/2	69-1/2	66-1/4	63	60
4-	73-1/4	69-3/4	66-1/4	62-3/4	59-1/4	55-3/4

Table 11 (Continued)
Efficiency Table for No. 2 Oil (Carbon Dioxide vs Temperature)

	NET STACK TEMPERATURE (degrees F)						
	600 degrees	650 degrees	700 degrees	750 degrees	800 degrees	850 degrees	900 degrees
15-	81	79-3/4	78-3/4	77-1/2	76-1/2	75-1/2	74-1/4
-	80-3/4	79-1/4	78-1/2	77-1/4	76	75	73-3/4
14-	80-1/4	79	78	76-3/4	75-1/2	74-1/2	73
-	80	78-3/4	77-1/2	76-1/4	75-1/4	74	72-1/4
13-	79-1/2	78-1/4	77	75-3/4	74-1/2	73-1/2	71-3/4
-	79	77-3/4	76-1/2	75-1/4	73-3/4	72-3/4	71
12-	78-1/2	77-1/4	75-3/4	74-1/2	73	71-1/2	70-1/4
-	78	76-1/2	75-1/4	73-3/4	72-1/4	70-3/4	69-1/2
11-	77-1/4	75-3/4	74-1/2	73	71-1/2	70	68-1/2
-	76-1/2	75	73-3/4	72	70-1/2	69	67-1/2
10-	75-3/4	74-1/4	72-3/4	71	69-1/2	68	66-1/4
-	75	73-1/4	71-3/4	70	68-1/4	66-3/4	65
9-	74	72-1/4	70-3/4	68-3/4	67	65-1/4	63-1/2
-	73	71-1/4	69-1/2	67-1/2	65-1/2	63-3/4	62
8-	71-3/4	70	68	66	64	62	60
-	70-1/2	68-1/2	66-1/2	64-1/4	62-1/4	60	58
7-	69 67	64-3/4	62-1/2	60-1/4	57-3/4	55-1/2	
-	67-1/4	65	62-3/4	60-1/4	57-3/4	55-1/2	53
6-	65-1/4	62-3/4	60-1/4	57-1/2	55	52-1/2	50
-	63	60-1/4	57-1/2	54-1/2	51-3/4	49	46-1/2
5-	60	57	54	51	48	45-1/2	42-1/2
-	56-3/4	53-1/2	50-1/4	47	43-1/2	40-1/4	36-3/4
4-	52	48-1/2	45	41-3/4	37-1/2	33-3/4	30

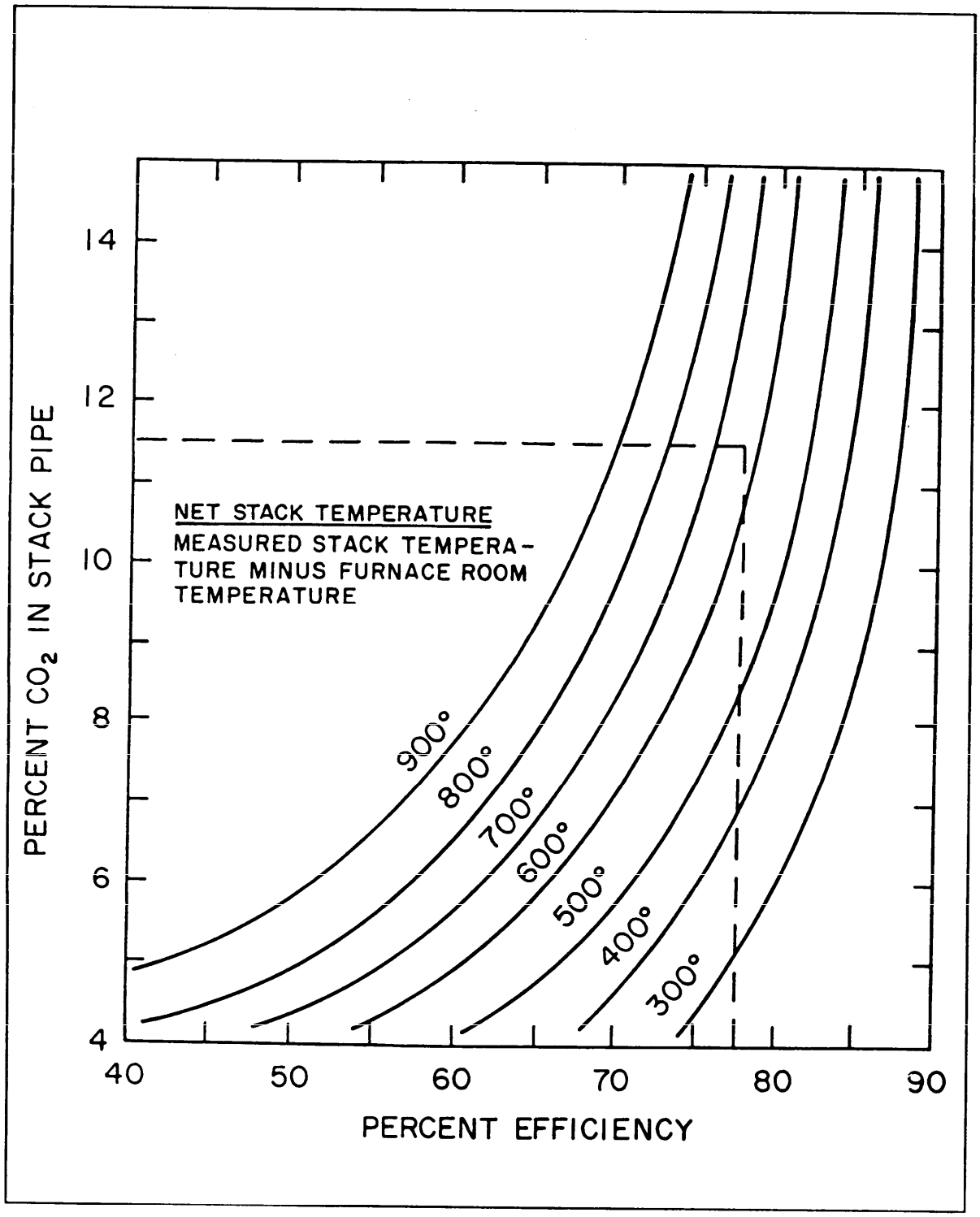

Figure 48
Graph of Heating Plant Efficiency

Now that we know what to measure and why, let's turn our attention to how to properly measure for steady-state efficiency. As a minimum, measure both the percent carbon dioxide or oxygen and the net stack temperature, but also, to get the complete picture and to do the job right, smoke and draft measurements are also required.

3.9.2 Measurement of Carbon Dioxide or Oxygen. Historically, to determine the weight of the combustion gases per gallon of fuel oil burned, carbon dioxide has been measured with equipment like that shown in Figure 49. This is a rugged, inexpensive and easy-to-operate device. The oxygen also can be used to determine the weight of the combustion gases. There are devices that measure oxygen rather than carbon dioxide percent for the determination of steady-state efficiency, but let's turn our attention to the most common device first - carbon dioxide analyzers.

Some manufacturers make a carbon dioxide analyzer called "Fyrite", which is the most well-known instrument on the market. The Fyrite, and other similar instruments work on the following principles:

a) Chemical adsorption of a gas sample by a liquid chemical absorbent.
b) Chemical absorbing fluid is also used as indicating fluid.

3.9.2.1 Fyrite Analyzer. The Fyrite analyzer contains potassium hydroxide, a liquid with a capacity to absorb large amounts of carbon dioxide. The Fyrite consists of two main parts - sampling pump and analyzer. The sampling pump consists of:

a) A metal sampling tube which is inserted into the flue gases.
b) A yarn filter and water trap which stops soot and water droplets from entering the analyzer.
c) A sample pump - a rubber bulb with a suction valve and a discharge valve; these valves are rubber flapper check valves which allow flow in only one direction.
d) A rubber connector which seals the sampling pump system to the analyzer.

The analyzer is molded of clear plastic containing top and bottom reservoirs and a center tube connecting the two reservoirs. The bottom of the lower reservoir is sealed off by a flexible rubber diaphragm which rests on a perforated metal plate. The upper reservoir is covered by a molded plastic cap which contains a double-seated plunger valve. A spring holds this valve against a finished seat in the top cap providing a perfect seal which makes the instrument spillproof in any position. When the valve is fully depressed it vents the top reservoir to the atmosphere and seals the center tube beneath it. When the valve is partially depressed, the entire instrument is open to the atmosphere.

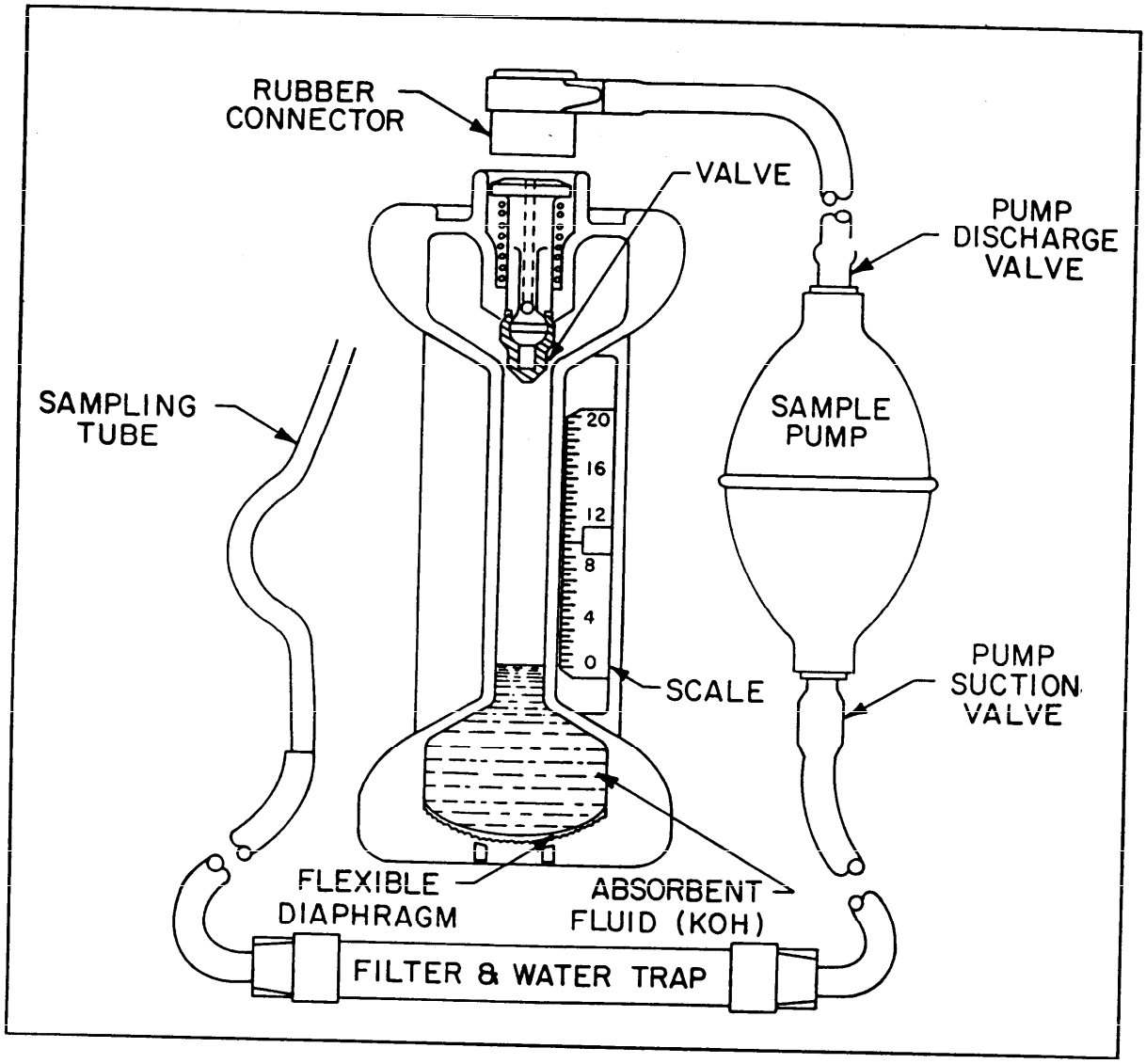

Figure 49
Construction of Carbon Dioxide Gas Analyzer

The bottom reservoir is filled with the absorbing fluid which extends about 1/4 inch into the bore of the center tube when the instrument is held upright. The scale, which is mounted to one side of the center tube, is movable so that before each test the scale may be conveniently adjusted to locate the zero scale division exactly opposite the top of the fluid column in the center tube.

3.9.2.2 Amount of Carbon Dioxide in a Gas Stream. To measure the amount of carbon dioxide in a gas stream you must measure a known volume of gas, bring the gas into contact with the absorbing solution, and measure the loss in

volume after the carbon dioxide is absorbed. To accomplish this, you must first prepare the instrument for sampling by purging the solution and adjusting the scale so that the zero mark is level with the liquid level. Be sure of the following:

a) Allow instrument to reach room temperature - if you have just come in from the cold outdoors, place the Fyrite in a warm location such as near the boiler or furnace. Make sure it is not too hot and don't forget to remove the instrument.
b) Make sure sufficient liquid is in the reservoir - if the liquid level is low, add water to the top of the reservoir and depress plunger valve. Repeat until scale can be adjusted to the height of the liquid level.

Zero the instrument by turning the Fyrite upside down at least twice, forcing the gas within the reservoir to bubble through the liquid; then upright and depress the plunger valve fully. After five seconds (or some other known time interval), adjust the zero mark on the scale to the liquid level. The instrument is now ready for sampling. Liquid may continue to drip down the bore of the lower reservoir causing the liquid level to rise above the zero mark on the scale. Do not readjust the scale.

3.9.2.3 Testing with Fyrite. To make a test with the Fyrite, the metal sampling tube at one end of the rubber hose is inserted into the gas to be analyzed. Then, the connector plug at the other end of the rubber hose is pressed down on the spring-loaded valve at the top reservoir. This seals off the center bore. Next, a sample of the gas is pumped into the top reservoir by stroking the rubber bulb. At least 18 bulb strokes should be used to assure that the rubber hose and the top reservoir are thoroughly purged of the previously analyzed sample. On the last bulb stroke the finger is lifted from the connector plug which automatically returns the plunger valve to the upper position against its top seat. With the valve in this position, 60 cubic centimeters of the gas sample are locked into the Fyrite and the top reservoir is opened to the center bore so that the gas sample can pass to the absorbing fluid. The Fyrite is then turned over, forcing the gas sample to bubble through the absorbing solution which absorbs the carbon dioxide. This is repeated two additional times. The instrument is then turned back and held upright again. After 5 seconds (or the same time interval used when zeroing the instrument), read the scale adjacent to the liquid level. This is the carbon dioxide percent in the gas sample. Record this value on a data sheet.

The reason the liquid level will rise is because the absorption of carbon dioxide by the absorbing fluid creates a suction in the lower reservoir which causes the diaphragm at the bottom to flex up. This, in turn, permits the level of the absorbing fluid to rise in the center tube an amount equal to the oxygen absorbed.

3.9.2.4 Determining Strength of Absorbing Solution. There is an easy check to determine if the strength of the absorbing solution is weakening and needs replacement. After completing a measurement and recording the carbon dioxide

nerability of each event to the adversary intelligence threat

value, turn the Fyrite over an additional two times forcing the gas sample to bubble through the absorbing solution. Return the analyzer to the upright position and read the carbon dioxide percent (after the same interval of time used before). If this value is greater than the recorded carbon dioxide percent, it is likely that the absorbing solution is weak and is not absorbing carbon dioxide at its normal rate. Replace the absorbing liquid before using the analyzer for further measurements. Refer to the manufacturer's instructions for the proper procedure on filling the analyzers.

3.9.2.5 Determining Sampling Leakage. Also, there is an easy check to determine if the sampling tube is leaking. Place your finger over the end of the connector plug and squeeze the bulb. If the bulb remains deflated and does not refill with air, the sampling tube is leak-free.

Some manufacturers also make an oxygen Fyrite that operates on the same principle but uses a fluid that absorbs oxygen. The carbon dioxide analyzer is more widely used and the absorbing liquid is good for approximately 300 samples; the oxygen fluid is only good for about 100 samples. The use and operation of the oxygen analyzer is identical to the procedure followed for carbon dioxide. The only difference is in checking the absorbing strength of the fluid. To determine the absorbing strength of the oxygen analyzer, pump a sample of room air into the analyzer and measure the oxygen content - it should read 21 percent. If it reads less, replace the liquid.

If you are in the process of squeezing the bulb and forget how many times you have already squeezed it, just continue squeezing until you are sure you've squeezed the bulb 18 times. It doesn't matter if you "over squeeze" just as long as you make a minimum of 18 compressions of the bulb.

3.9.3 Other Carbon Dioxide or Oxygen Measurement Techniques. There are many other alternatives for measuring carbon dioxide or oxygen. Several have been packaged into automatic or semi-automatic combustion analyzers. Most utilize an oxygen sensor cell which produces a small electrical current proportional to the level of oxygen in a flowing sample of combustion products which are drawn by a small suction pump through a test cell containing the oxygen sensor.

In the past, some analyzers were packaged into a portable unit which could alternatively measure oxygen (or carbon dioxide depending on the specific model) percentage in the flue gases, net stack temperature, and provided a means to use the sample pump to provide a smoke spot check. The net stack temperature and oxygen percent data were obtained by reading an indicator scale on the machine and then the operator used a manual slide rule type device to determine the corresponding stack efficiency.

This basic configuration has been upgraded and improved upon by many manufacturers. The resulting combustion analyzers available today fall into two general types, those which display temperature and oxygen (or carbon dioxide) percent composition, which still require the manual use of a slide rule type device, and those which incorporate a small electronic

microprocessor which automatically calculates the efficiency based on continuous measurement reading of oxygen (or carbon dioxide) and net stack temperature and displays the efficiency on a digital readout panel on the device.

3.9.4 Measurement of Flue Gas Temperature. Flue gas temperature (or often called stack temperature) is normally determined with a bi-metallic dial thermometer with a range of 200 to 1000 degrees F (see Figure 50). The bimetallic element is a single helix, low mass coil fitted closely to the inside of a stainless steel stem. The stainless stem is 3/16 inches outside diameter (od) and can be easily inserted into a 1/4 inch hole in a flue pipe. Stem mounting sleeves are also available, which make it possible to hold the thermometer in pipe ducts with the stem inserted at the proper length.

ENSURE THE THERMOMETER IS READING CORRECTLY AND RECORD THE TEMPERATURE.

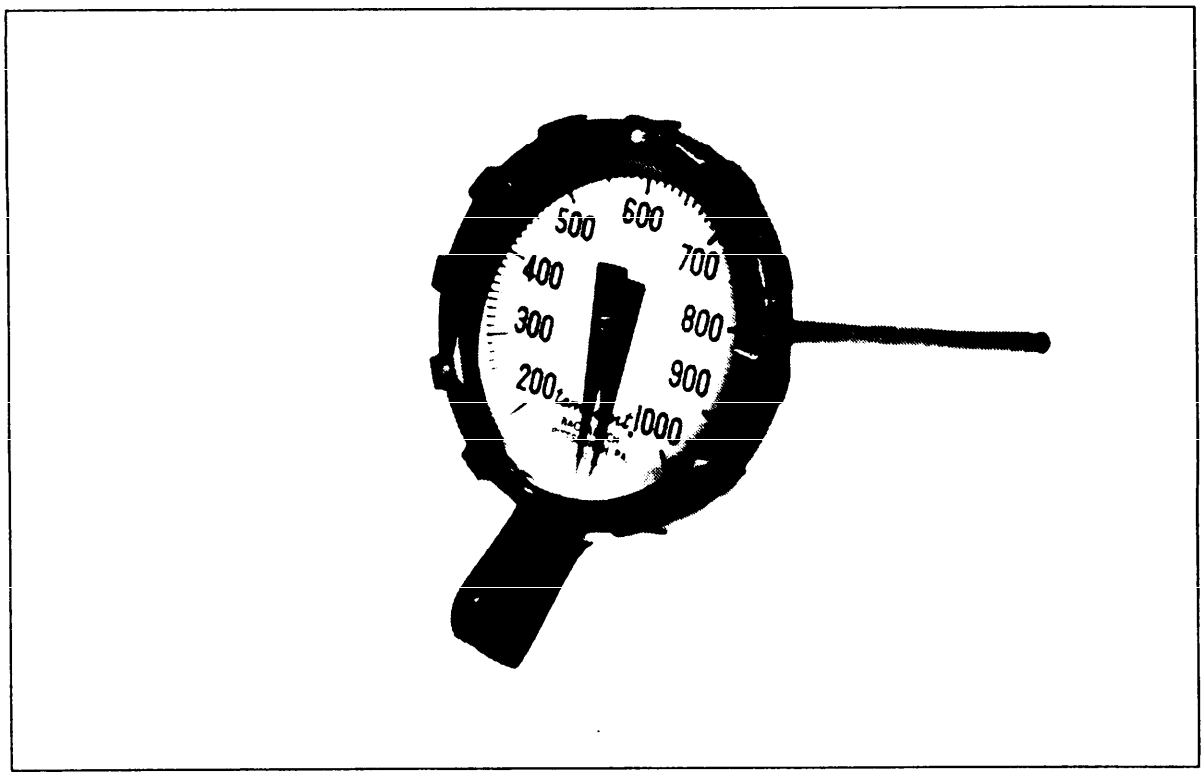

Figure 50
Flue Gas Thermometer

On these types of thermometers, the dial can easily loosen from the stem and rotate so that inaccurate temperature readings are displayed. There have been cases where dial thermometers have been as much as 200 degrees F off from the actual temperature. Frequent calibration of these thermometers against a mercury thermometer by inserting both side by side in a heated flue or duct is recommended.

The net stack temperature is found by determining the room temperature and subtracting this value from the flue gas temperature.

DON'T FORGET TO DO THIS!

Also, it is extremely important that flue gas temperature is measured at steady-state condition. This usually requires about 15 minutes of burner operation. However, the best way to determine if the system is at steady-state is to insert the thermometer in the flue pipe. When the temperature rises less than 5 degrees F during a 1 minute period, steady-state conditions exist. Remember, if you don't wait for steady-state you will record a temperature that is lower than actual and this will produce a steady-state efficiency which is higher than actual. By doing this, you may think the unit is operating at a reasonable efficiency level when it really isn't. You may also be denying your activity command the opportunity to recommend the installation of a new, flame-retention oil burner that can aid in achieving high steady state efficiency and conserve fuel.

There are other devices that can be used to measure the flue gas temperature such as mercury-filled glass thermometers or thermocouples with potentiometers. Do not consider a glass thermometer for other than calibration use. They are fragile and easily broken and furthermore, mercury vapors are hazardous to your health. Thermocouples are a possible alternative to dial thermometers; they are accurate, have a quick response to temperature change, and are easy to use. Although thermocouples are inexpensive, a good potentiometer is somewhat more expensive than a dial thermometer. For this reason it appears that presently the best bet for temperature measurement is the dial thermometer, make sure it's reading correctly.

3.9.5 Smoke Measurement. Determining only the steady-state efficiency does not present the whole picture needed to properly adjust an oil burner. High efficiency with a high smoke level will likely become low efficiency or, even worse, require a service call resulting from plugged flue passages. The objective of a smoke test is to measure the smoke content in the flue gases and then, in conjunction with other steady-state test results, adjust the burner in optimum operation.

The American Society for Testing and Materials (ASTM) in 1965 adopted ASTM D2156, Standard Test Method for Smoke Density in Flue Gases from Burning Distillate Fuels, which covers the evaluation of smoke density in the flue

gases from burning distillate fuels. It is intended primarily for use with home heating equipment burning kerosene or heating oils. It may be used in the laboratory or in the field to compare fuels for clean burning or to compare heating equipment.

A test smoke spot is obtained by pulling 2250 cubic inches of flue gas through a square inch of standard filter paper (or a proportionally smaller volume of flue gas and proportionally smaller filter area). The color (or shade) of the spot thus produced is visually matched with a standard scale, and the smoke density is expressed as a "smoke spot" number.

The most widely used smoke measuring device is shown in Figure 51. It is based on the principle of filtering soot particles out of a sample of flue gas. The device is quite simple and rugged (see Figure 51). It consists of a hand held piston in a tube with a clamping device at the inlet to the tube to hold a piece of white filter paper. The inlet tube is connected through flexible rubber hosing to a solid steel probe that can be inserted into a 1/4 inch hole in a flue pipe or duct. At the outlet end of the piston is a handle that is used to stroke the piston within the tube.

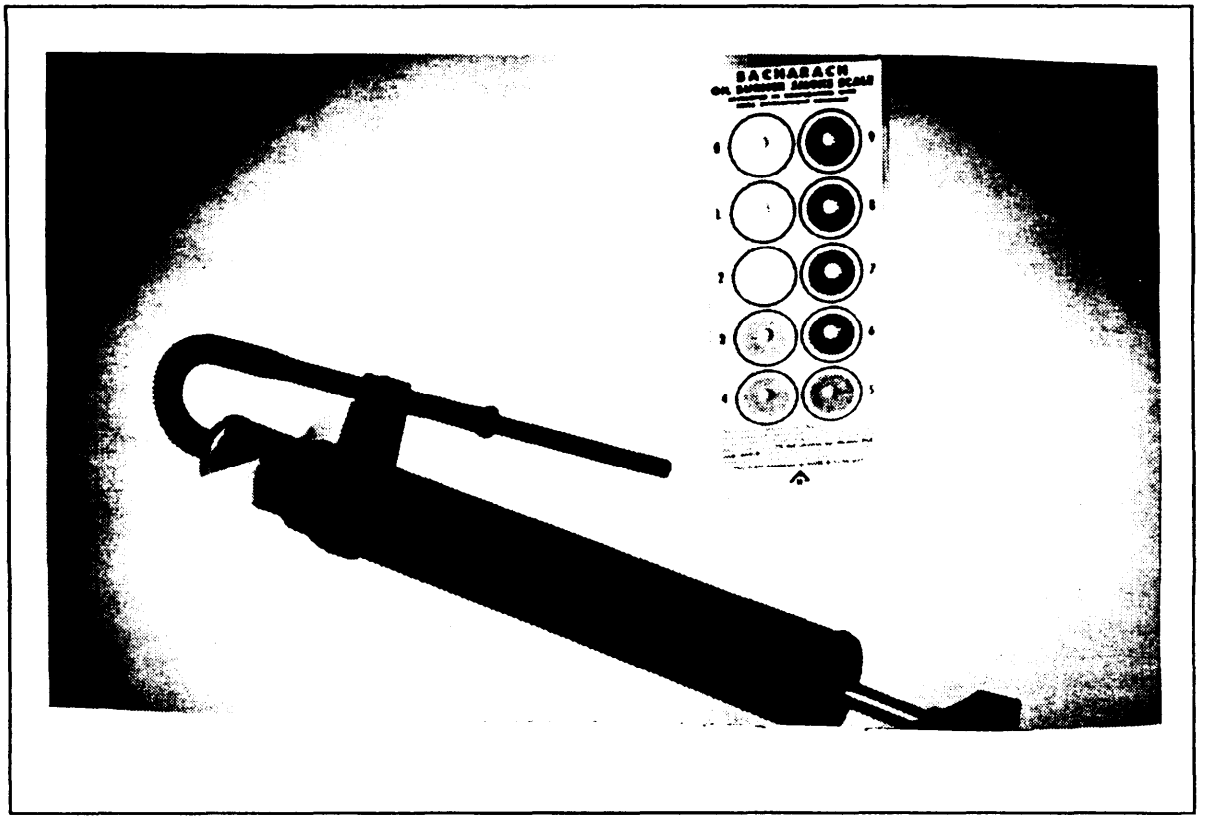

Figure 51
Bacharach Smoke Spot Tester

The operation of the device is simple and consumes very little time. After the burner has been in operation for at least five minutes, place the filter paper into the clamping device, insert the steel probe into the flue pipe hole, and slowly withdraw the piston fully from the tube. Hold the piston in the fully open position for about 3 seconds and then slowly push the piston completely in. Repeat the stroking procedure ten times. This allows an exact volume of gas to be passed through the filter paper. When the filter paper is removed, the amount of soot which has been filtered onto the paper will leave a circular colored spot. The darkness of the "smoke spot" is then compared against a scale from 0 to 9 representing increasing shades of darkness). If there is no soot, the paper will be white colored.

Figure 52 shows a rating scale. Actual comparison to determine a number rating is made by holding the filter paper behind the smoke scale so that the spot on the filter paper fills the center hole in the spot on the smoke scale. This allows direct comparison with the various spots on the scale.

Automatic electronic combustion analyzers also measure smoke by using a pump to draw a measured volume of flue gas (2250 cubic inches per square inch of filtering area) through filter paper (identical to the paper used in Figure 51. The "smoke spot" is then compared against an oil burner smoke scale.

3.9.6 Draft. Correct draft is essential for efficient burner operation. There are two types of devices that are commonly used to measure draft - a Draftrite Pocket Draft Gauge or a MZF Draft Gauge. The Draftrite is small and easy to use while the MZF is more sensitive yet also easy to use. The Draftrite is a slim, hand held, rectangular device with a curved draft scale placed behind a free-floating pointer. The back of the device has an opening in which short metal tubes screwed in series can be inserted. The end of the metal tubes can be placed in the flue pipe and the pointer will indicate the draft on the numbered scale. These metal tubes may melt if left in the flue for too long. Be Careful!

The MZF Draft Gauge also contains a pointer located over a large scale. Rubber tubing is connected to an opening at the rear of the device and also is fitted, at the other end, onto a metal probe. Upon inserting the probe into a flue or over the fire in a boiler or furnace, the pointer moves in direct proportion to the magnitude of the draft.

Either of these devices is acceptable for use in determining draft, if they are used properly. Both draft measurement devices are shown in Figure 53.

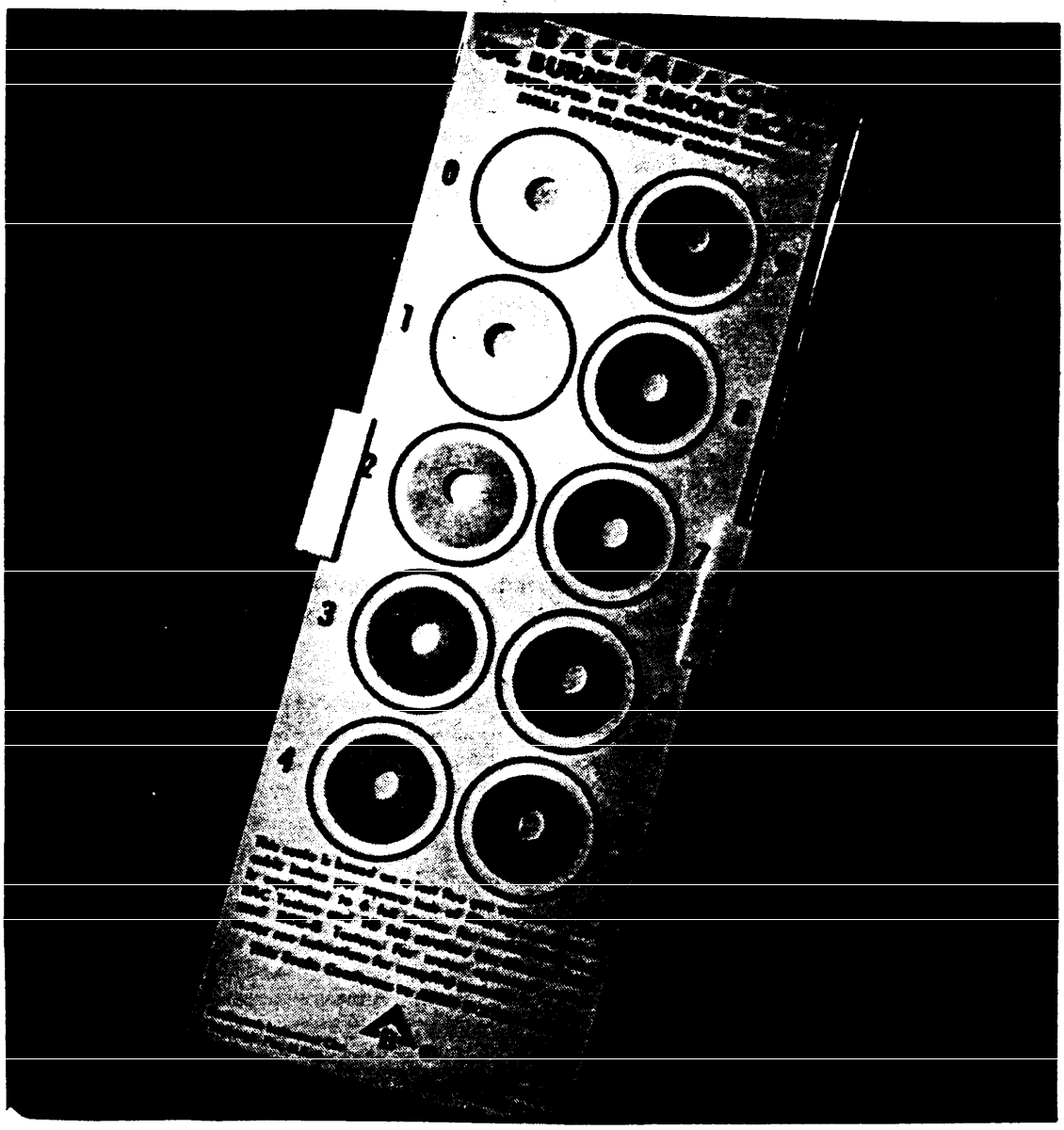

Figure 52
Oil Burner Smoke Scale

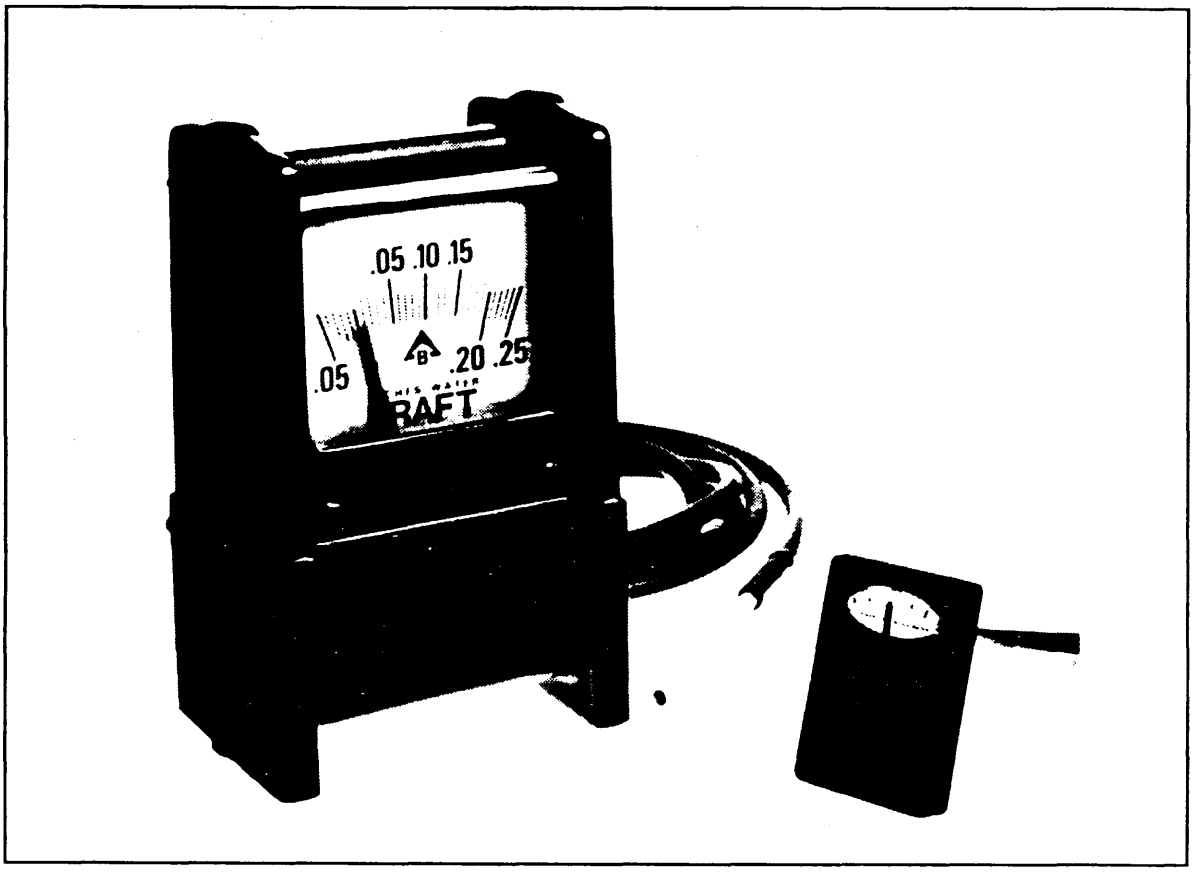

Figure 53
Draft Measurement Devices

3.10 Maintenance. Maintenance on gun burners should be performed on an annual basis:

a) Carefully remove burner from combustion chamber.
b) Clean soot and carbon combustion chamber and burner assembly.
c) Clean blower blades with a brush.
d) Adjust electrodes.
e) Inspect burner nozzles, replace if worn.
f) Replace any screens or filters in oil pump and oil lines.
g) Install burner back into the heater.
h) Check pump oil pressure; there should be at least 100 psig delivery to the burner.
i) Check operation of automatic controls and flame safeguards for normal operation. There should be no presence of oil discharge, ignition, or flame.
j) Time trial for ignition for pilots and burners should be in accordance with manufacturer's instructions.
k) Adjust draft pressure to 0.02 inch water pressure.

l) Adjust the combustion until there is no visible smoke. Test the combustion efficiency by taking a carbon dioxide reading using a carbon dioxide analyzer. It should be 10 to 12 percent.

3.11 Troubleshooting. Gun oil burner problems and possible causes are given in the following guide:

3.11.1 Burner Motor Does Not Start, Starts and Locks Out, or Cycles

a) Does not start.
   (1) Relay does not close (will not close or contacts dirty).
   (2) Safety lock out stays open.
   (3) Bad relay coil.
   (4) Low voltage.
   (5) Open high limit control.
   (6) Broken wires or loose connections.
   (7) Relay transformer open.
   (8) Thermostat open (dirt on contacts, loose or dirty connections).
   (9) Stack switch open.
   (10) Heat sensing contacts out of place or open.
   (11) Motor overload open (burned out, dirty contacts).

b) Starts, but locks out.
   (1) No fuel oil out of nozzle.
      (a) Clogged.
      (b) Pressure too low.
      (c) Pump not working.
      (d) Loose motor coupling.
      (e) Air leaks in fuel line.
      (f) Fuel oil line hand valve closed.
      (g) Strains or screens clogged (filter, pump screen/nozzle strainer).
      (h) Pressure regulator stuck open.
      (i) Vent on fuel oil tank closed.
      (j) Empty fuel oil tank.
   (2) Fuel oil coming out of nozzle but no ignition.
      (a) Electrodes not positioned correctly.
      (b) Insulators cracked.
      (c) Ignition wires worn, loose or with dirty connections.
      (d) Transformer not operating.
      (e) Primary wires worn, loose or with dirty connections.
      (f) Low line voltage.
   (3) Fuel oil to nozzle, ignition OK, but no flame.
      (a) Clogged nozzle.
      (b) Clogged nozzle strainer.
      (c) Nozzle loose.
      (d) Pressure too low.
      (e) Fuel oil too heavy (wrong oil or too cold).

(f) Excessive air or too much draft.
(g) Electrodes in wrong position.

(4) Flame only burns a few seconds.
(a) Flame sensor not in correct position.
(b) Stack switch not operating correctly.
(c) Excessive air or air too cold.
(d) Flame is too lean.

c) Cycles, but not on lockout.
(1) Thermostatic differential too close.
(2) Anticipator set too close.
(3) Limit switch set too low.
(4) Overfired.

3.11.2 Burner Does Not Operate Correctly

a) Smoke, soot, odors and/or pulsating sound.
(1) Wrong oil pressure.
(2) Flame touches combustion chamber.
(3) Not enough draft.
(a) Dirty chimney.
(b) Draft control out of adjustment or stuck open.
(c) Dirty flue.
(d) Combustion chamber or heat exchanger leaks.

(4) Poor mixing of air and oil.
(a) Nozzle is worn loose, dirty, or drips.
(b) Oil pressure too low or high.
(c) Poor air velocity and turbulence.
(d) Not enough air (shutter closed too much, fan binding or tight bearings).

b) Puffs back.
(1) Water in oil.
(2) Delayed ignition.
(a) Electrodes not positioned correctly or loose.
(b) Insulator carbonized.
(c) Nozzle worn, loose, dirty, or drips.
(d) Voltage drop when burner starts.
(e) Oil pressure too low or too high.
(f) Transformer leads loose or dirty.
(g) Transformer not operating correctly.
(h) Excessive air or high draft.

c) Noise.
(1) Loose fan.
(2) Loose shutter.
(3) Worn pump.
(4) Dirty strainer.
(5) Air in oil line.
(6) Transformer hum.
(7) Draft control vibrates.
(8) Motor coupling worn.
(9) Motor and pump not lined up correctly.

(10) Relay contacts not seating tightly.
(11) Oil suction line restricted.
(12) Motor mounting loose.
(13) Tight motor bearings.
(14) Tank hum.

d) Fuel oil consumption is too high.
(1) Nozzle is worn, loose.
(2) Combustion chamber is dirty.
(3) Too much combustion air.
(4) Poor mixing of air and oil.
(5) Not enough draft over fire.
(6) Air leaks into combustion chamber.
(7) Oil pressure too high or too low.
(8) Stack temperature too high.

Section 3: SELF-STUDY QUESTIONS

Q3-1 Why do some oils require preheaters?

Q3-2 What devices are driven by the motor on an oil burner?

Q3-3 How is atomized oil ignited?

Q3-4 What function is served by the ignition transformer?

Q3-5 What is an average oil pump discharge pressure?

Q3-6 Name two methods which are used to sense that an oil flame has been established.

Q3-7 What problem will be encountered if the stack temperature sensing element is not properly sealed to prevent leakage?

Q3-8 Where do the wires from a cad cell go?

Q3-9 How much draft should you be able to measure in the flue stack of a small oil-fired furnace?

Q3-10 How is flue gas tested for smoke?

Q3-11 What does a high percentage of carbon dioxide reading indicate about the combustion efficiency?

Q3-12 When is a booster pump used on an oil storage tank?

Q3-13 What is the difference between a regular burner and a flame retention burner?

Section 4: THERMOSTATS

4.1 Thermostats. Thermostats for residential and commercial type heaters most frequently operate on 24 volts. The major exceptions are on small room heaters. Electric room heaters will use a simple line voltage thermostat. Millivolt systems will use a thermostat similar to the 24-volt thermostat, except that it provides a switch in the millivoltage circuit instead of in a 24-volt circuit.

Figure 54 shows a simple 24-volt thermostat. It is a heating thermostat which closes on a fall in temperature. When the contacts close, it will cause the heating system to operate. It is called a two-wire thermostat, as there are only two wires attached to this switch. The terminal identifications on this thermostat are R (red) and W (white). It does not matter which wires are attached to which terminals on a two-wire thermostat.

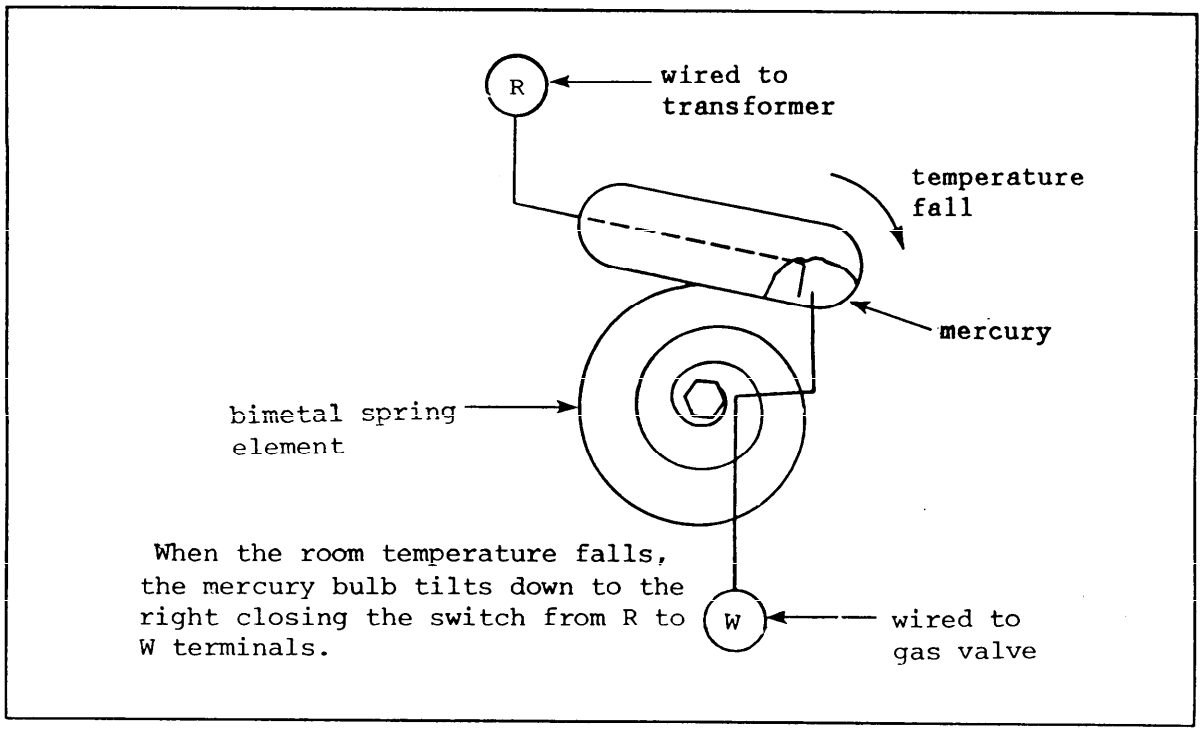

Figure 54
Two-Wire Thermostat

Figure 55 shows a thermostat which may be used to control either a heating or a cooling system. The bimetal tilts a mercury bulb which is a single pole double throw (SPDT) switch. If this switch were to be used to control both heating and cooling, either the heating or the cooling would be on at all times. In order to avoid this, we use a manual switch which is set either for heating or for cooling, so that only one or the other is available at any time. This is called a three-wire thermostat. The terminal identifications are R (red), W (white), and Y (yellow). When the thermostat calls for heating, the switch between red and white closes. When the thermostat calls for cooling, the switch between red and yellow closes.

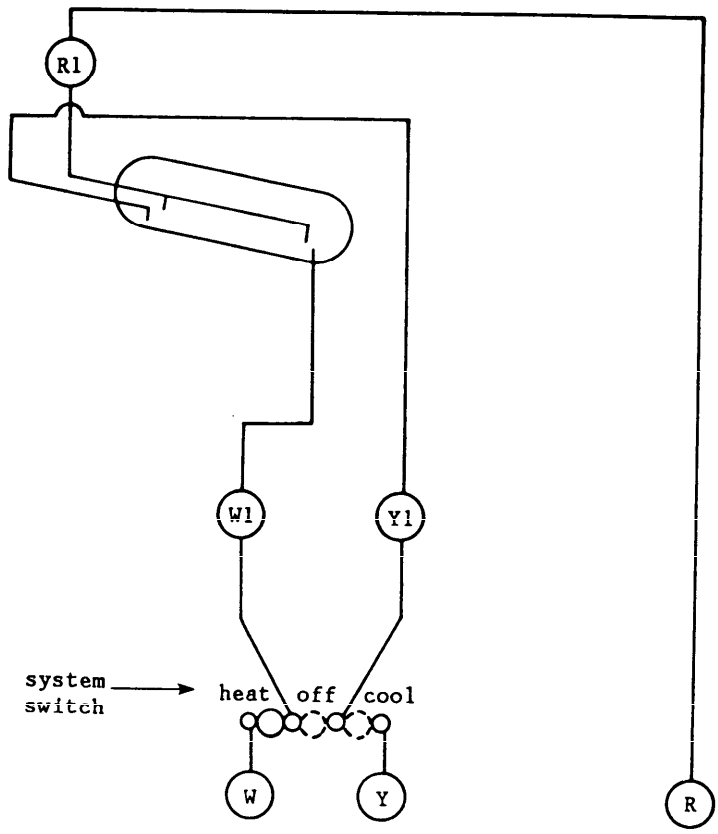

R1, W1, and Y1 are on the thermostat. Terminals R, W, and Y are on the subbase. In the position shown, the system switch is set for heat, and the thermostat is calling for heat, completing the circuit from R to W. On cooling, the circuit will be completed from R to Y.

Figure 55
Three-Wire Thermostat With a Subbase

Figure 56 shows a thermostat mounted on a sub-base. The sub-base contains all the manual switches. The system switch may be set for heat, cool, or off. The fan switch may be set for fan or auto. Figure 57 shows the internal wiring of the thermostat and sub-base. In the heat position, the thermostat will operate the gas valve or other primary heating control. In the cool position, the bimetal element will cause the compressor and evaporator fan to run. With the fan switch in the auto position, the fan will run whenever required by the heating or cooling system. With the fan in the on position, the fan will run, regardless of the position of the system switch or the bimetal temperature sensing switch. This is called a four-wire thermostat, and is the most commonly used thermostat to control a heating/cooling system. The terminal identifications are R, W, Y, and G (green). The red to green contact completes a circuit which energizes a blower relay.

Figure 58 shows another schematic of a room thermostat, with the addition of two small resistors. These resistors are called a heat anticipator and a cool anticipator. The heat anticipator is energized whenever the heating system is on. It "fools the bimetal element into thinking" that the room has warmed up before it actually does. The cooling anticipator is energized whenever the air conditioning has cycled off. It also fools the bimetal element. It causes the air conditioner to cycle on sooner than the bimetal is able to sense. The anticipators allow closer control of room temperatures by causing more frequent cycling of the heating and air conditioning system. The heating anticipator is located on the thermostat itself, and it is not adjustable. The cooling anticipator is located on the sub-base, and is not adjustable.

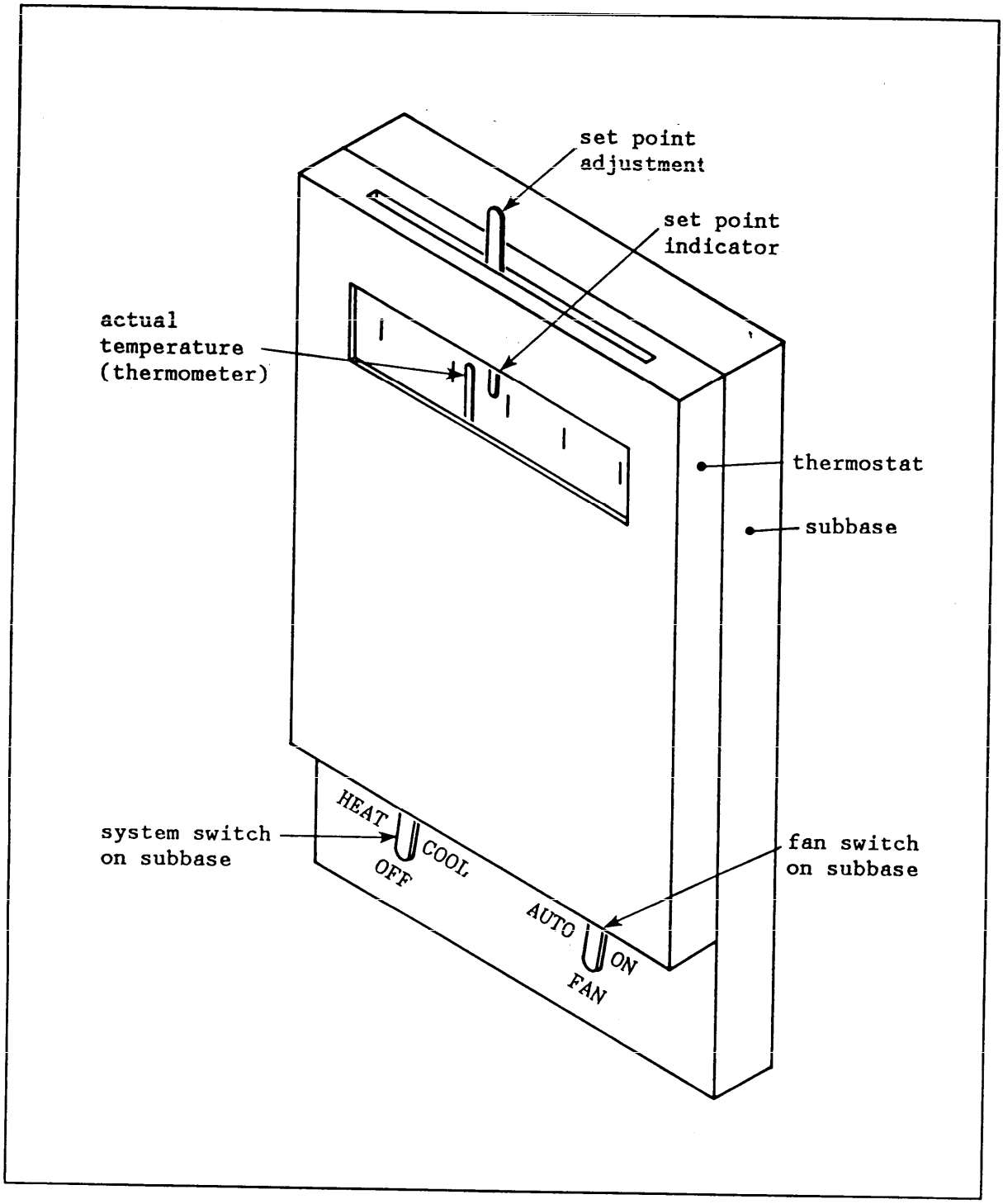

Figure 56
Manual Changeover, Heating and Cooling Thermostat With Subbase

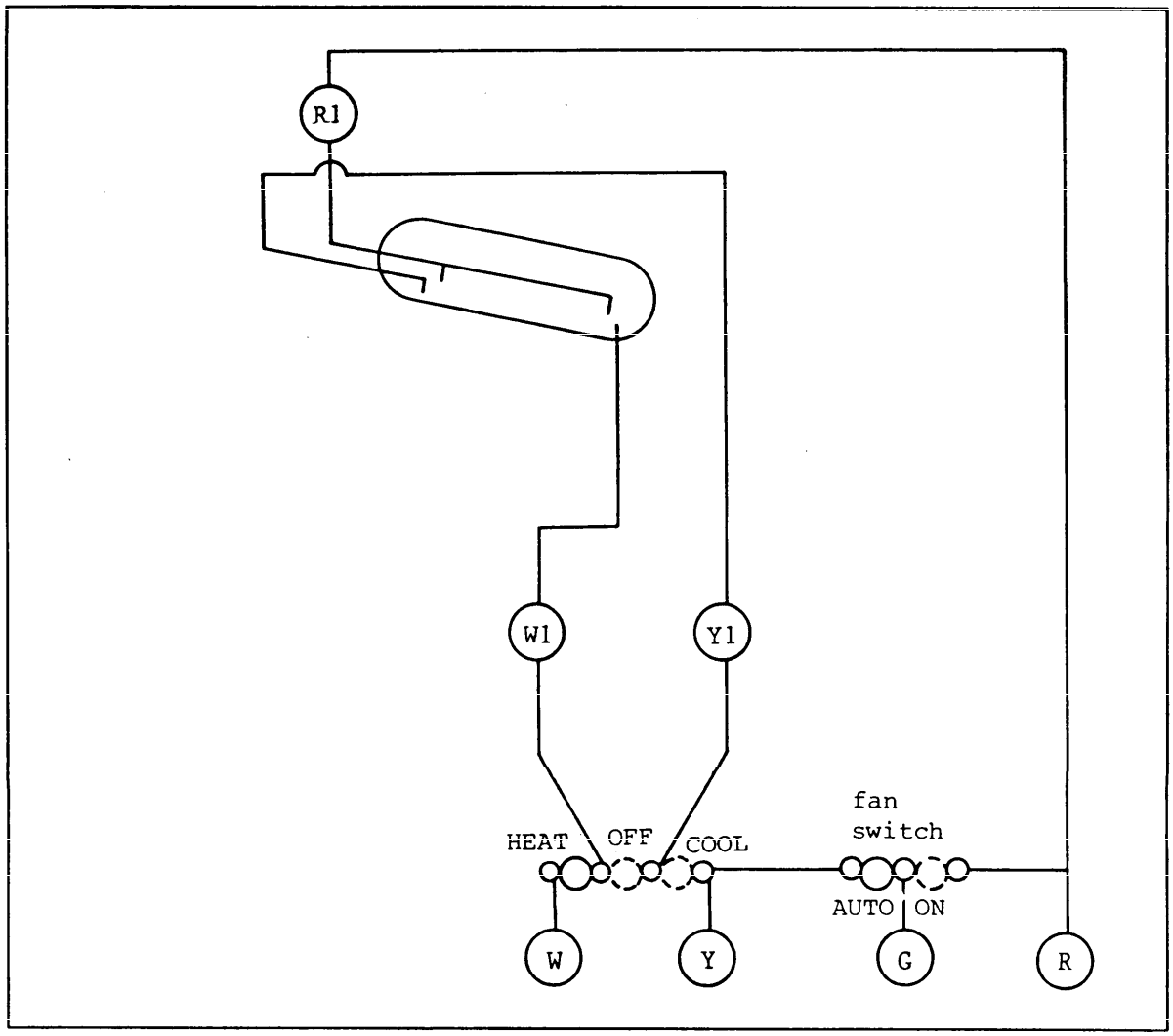

Figure 57
Internal Wiring of a Four-Wire Heating/Cooling Thermostat

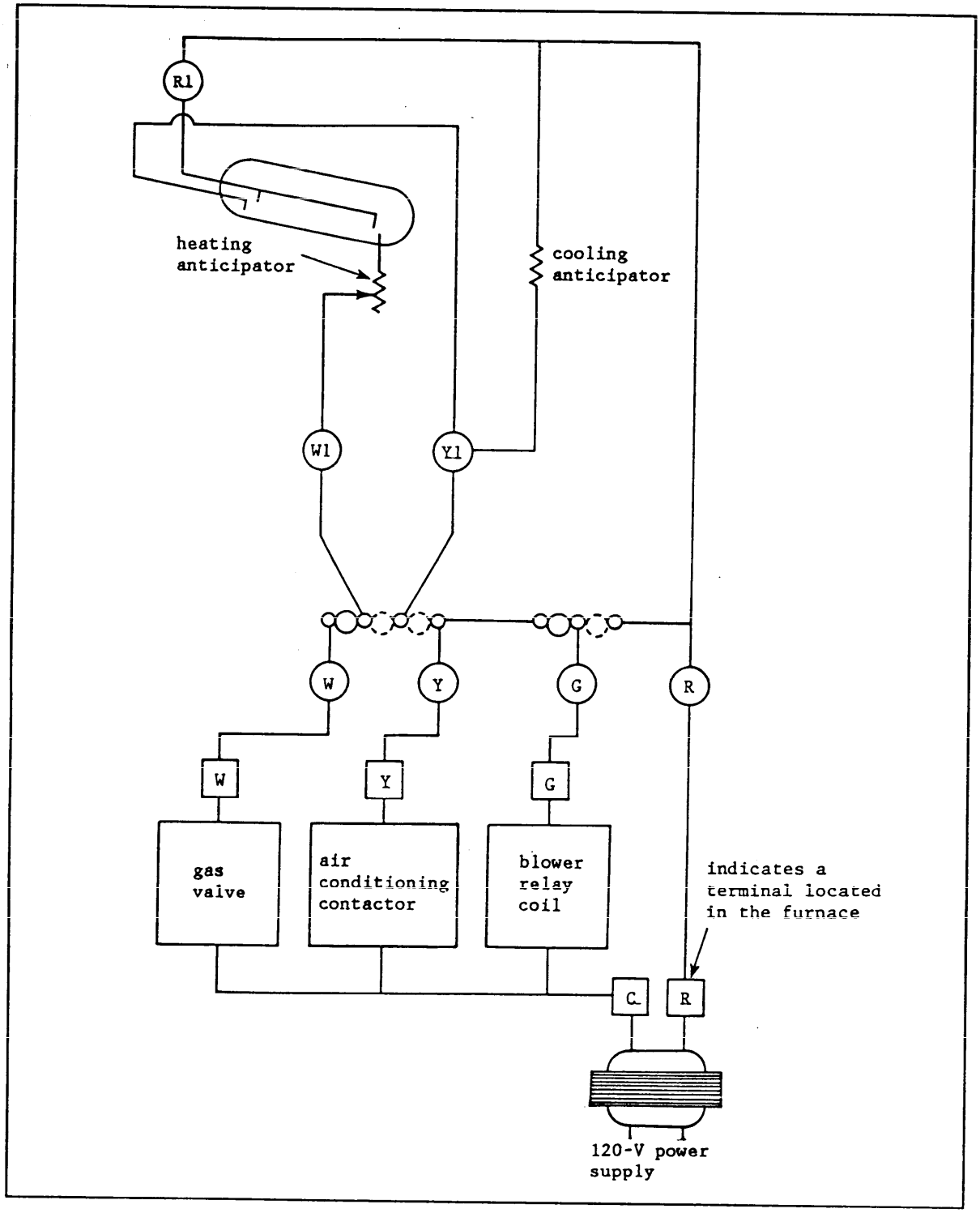

Figure 58
System Wiring for a Four-Wire Thermostat With Heating and Cooling Anticipators

Figure 59 shows the sub-base with the thermostat removed. All the wiring connections are made directly to the sub-base.

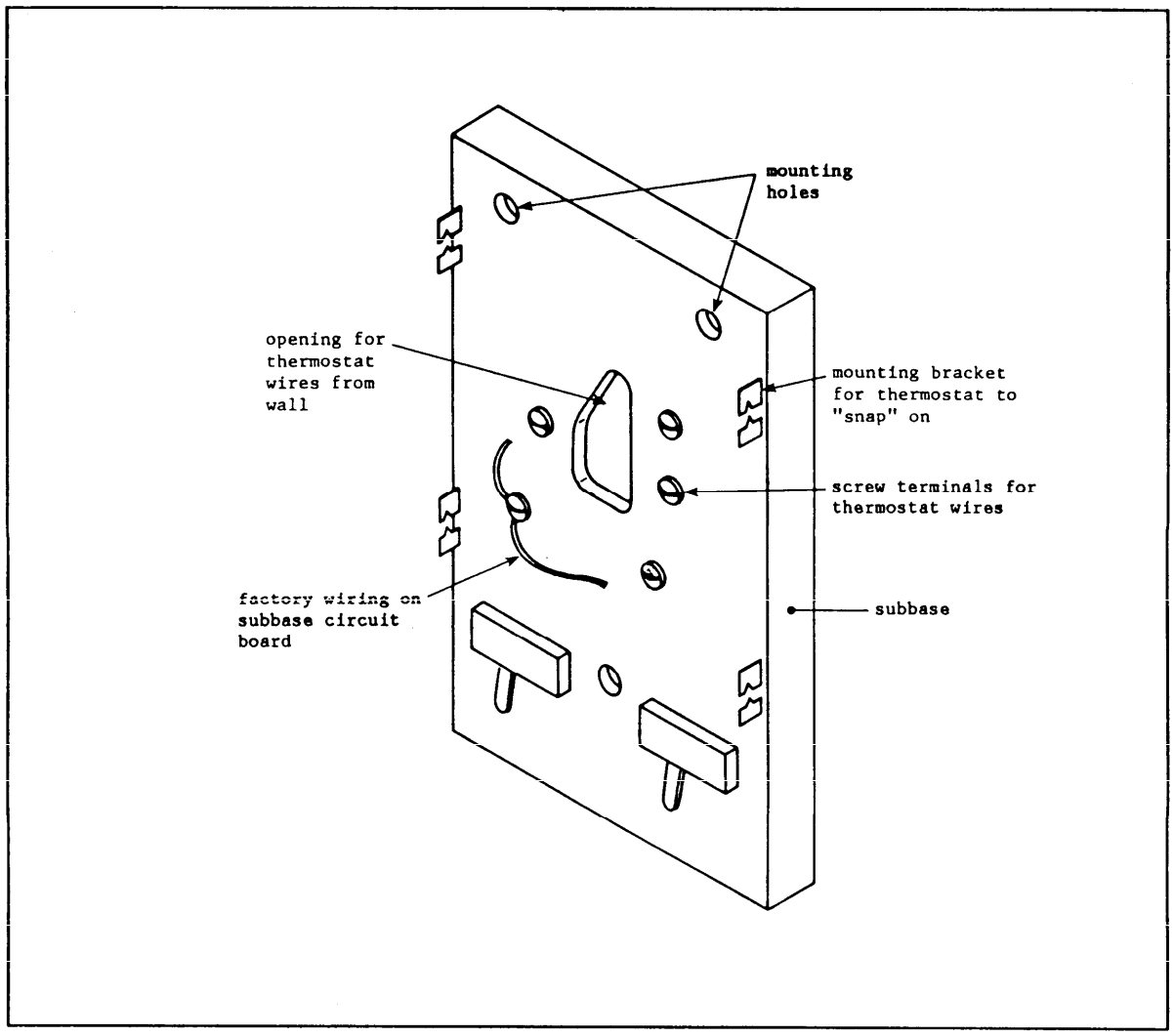

Figure 59
Four-Wire Thermostat Subbase

Table 12 has a detailed analysis of problems which are associated with the temperature control circuit.

Table 12
Thermostat Service Analysis

T/S INDICATES ROOM THERMOSTAT

CONDITION: T/S jumpered; system won't work	T/S jumpered; system works	Room temp overshoots T/S setting	Room temp doesn't reach T/S setting	T/S seems out of calibration	T/S cycles too often	T/S doesn't cycle often enough	Room temp swings excessively	POSSIBLE CAUSES
x								T/S not at fault; check elsewhere
		x						T/S mounted on cold wall
		x						T/S wiring hole not plugged
		x						T/S exposed to cold drafts
		x				x	x	T/S not exposed to circulating air
		x	x	x				T/S not mounted level (mercury switch type)
		x	x	x				T/S not properly calibrated
			x			x		Heating plant too small or underfired
x			x					Limit control set abnormally low
			x					T/S exposed to direct rays of sun
			x					T/S affected by heat from fireplace
			x					T/S affected by lamp, TV or appliances
			x					T/S affected by stove or oven
			x					T/S is mounted on warm wall
			x					T/S mounted near register or radiator
		x				x	x	T/S heater set too high
					x			T/S heater set too low
		x					x	Heating plant too large or input excessive
		x				x	x	T/S does not have heater
	x		x			x		T/S contacts are dirty
x								Low voltage control circuit open
x								Low voltage transformer burned out
x								Main valve operator is bad
x			x	x				Bad terminals, staking, splicing or soldering
	x							T/S damaged
			x	x				Clogged filter in forced warm air system

4.2 Gas Furnace Electrical Circuits. The furnace is plugged into the wall, providing 115 volts to be used by the fan motor and the primary winding of the control transformer. The transformer supplies 24 volts to the red terminal of the thermostat, Figure 60. When the thermostat closes, the 24 volts pass to the combination gas valve, causing it to open (provided that the thermocouple has proved the flame). With the main flame burning, the bonnet temperature rises, and is sensed by the fan switch. When the bonnet temperature reaches the cut-in setting of the fan switch, the fan motor will be energized through the 115-volt fan switch contacts. The limit switch also senses bonnet temperature, and will open if the bonnet temperature rises to the setting of the limit switch. The limit switch will cut off the gas valve, but it will continue to allow the fan to run, removing the heat from the furnace. The temperature limit switch may also be located in the 24 volt circuit as shown in Figure 60 or in the 120 volt circuit to the transformer as shown in Figure 61.

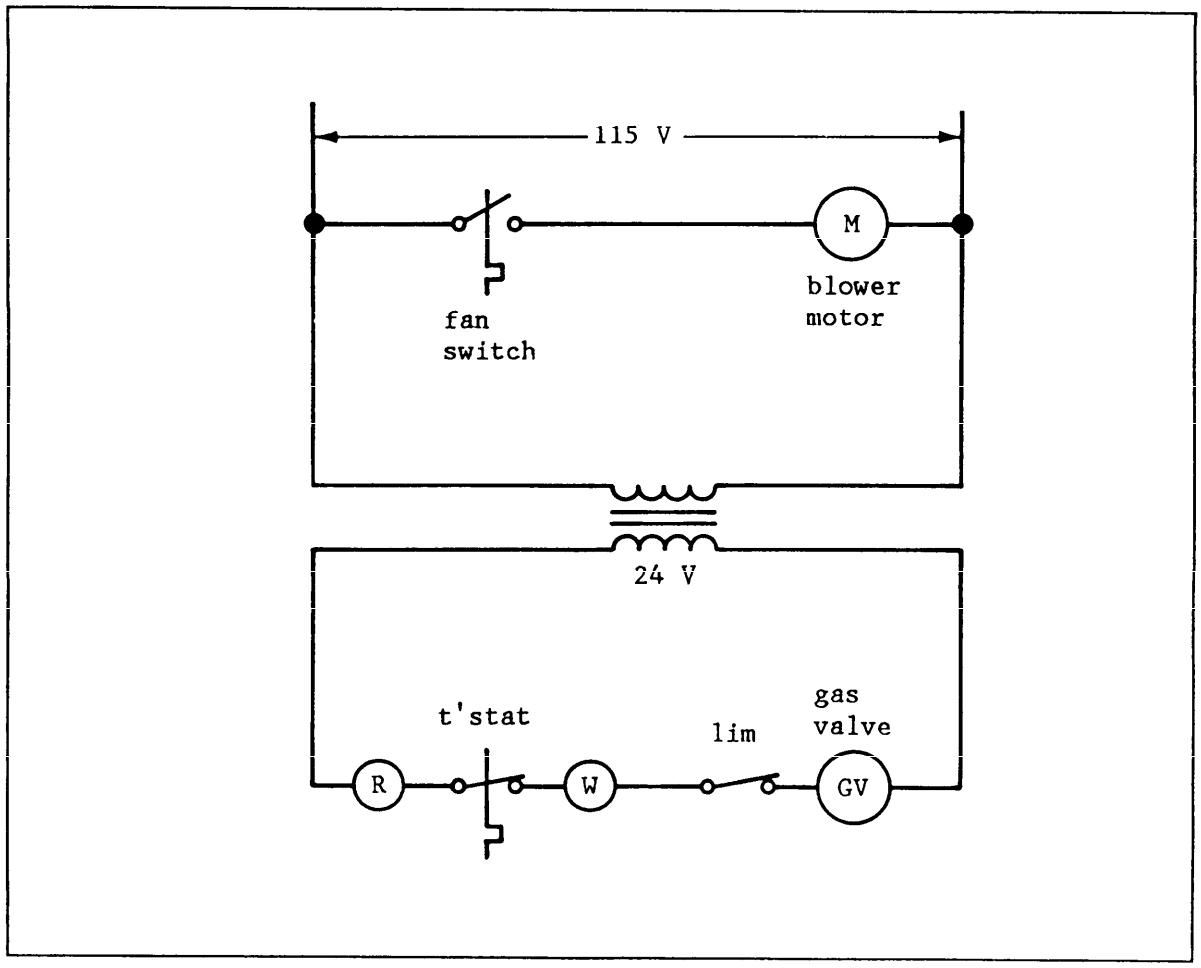

Figure 60
Temperature Limit Switch in 24-Volt Circuit

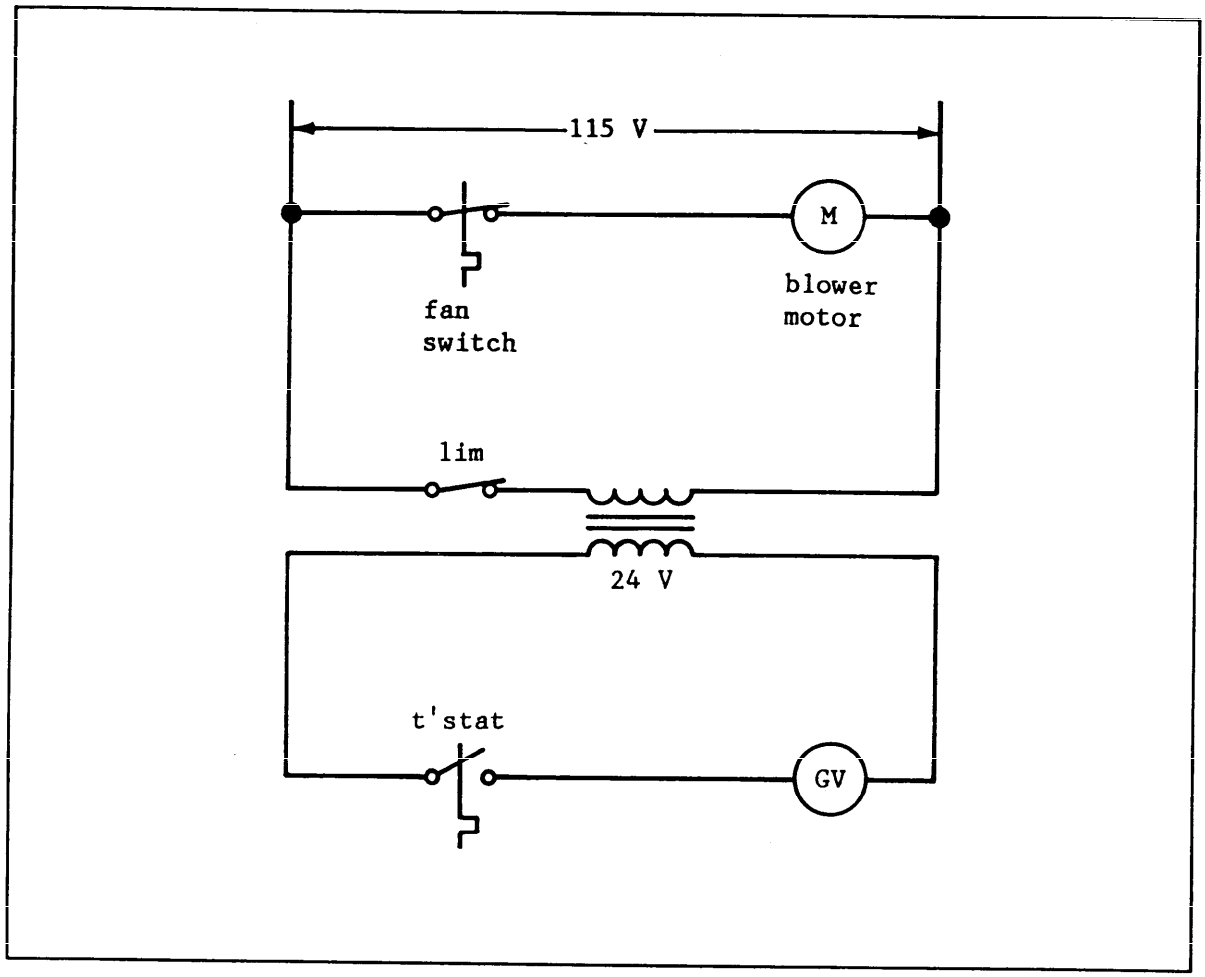

Figure 61
Temperature Limit Switch in 120-Volt Circuit

Figure 62 shows the controls for a downflow or horizontal furnace circuit. It uses two limit switches, and a timed start fan control. When the thermostat makes red to white, it energizes both the gas valve and a resistance heater in the fan control. After the gas valve has been opened for one minute, the resistance heater has warmed sufficiently to close the 115-volt bimetal contact, starting the fan motor. One of the limit switches is located downstream from the heat exchanger to detect overheating caused by low air flow or by overfiring. The other limit switch is located high, upstream of the heat exchanger to detect overheating caused by no air flow.

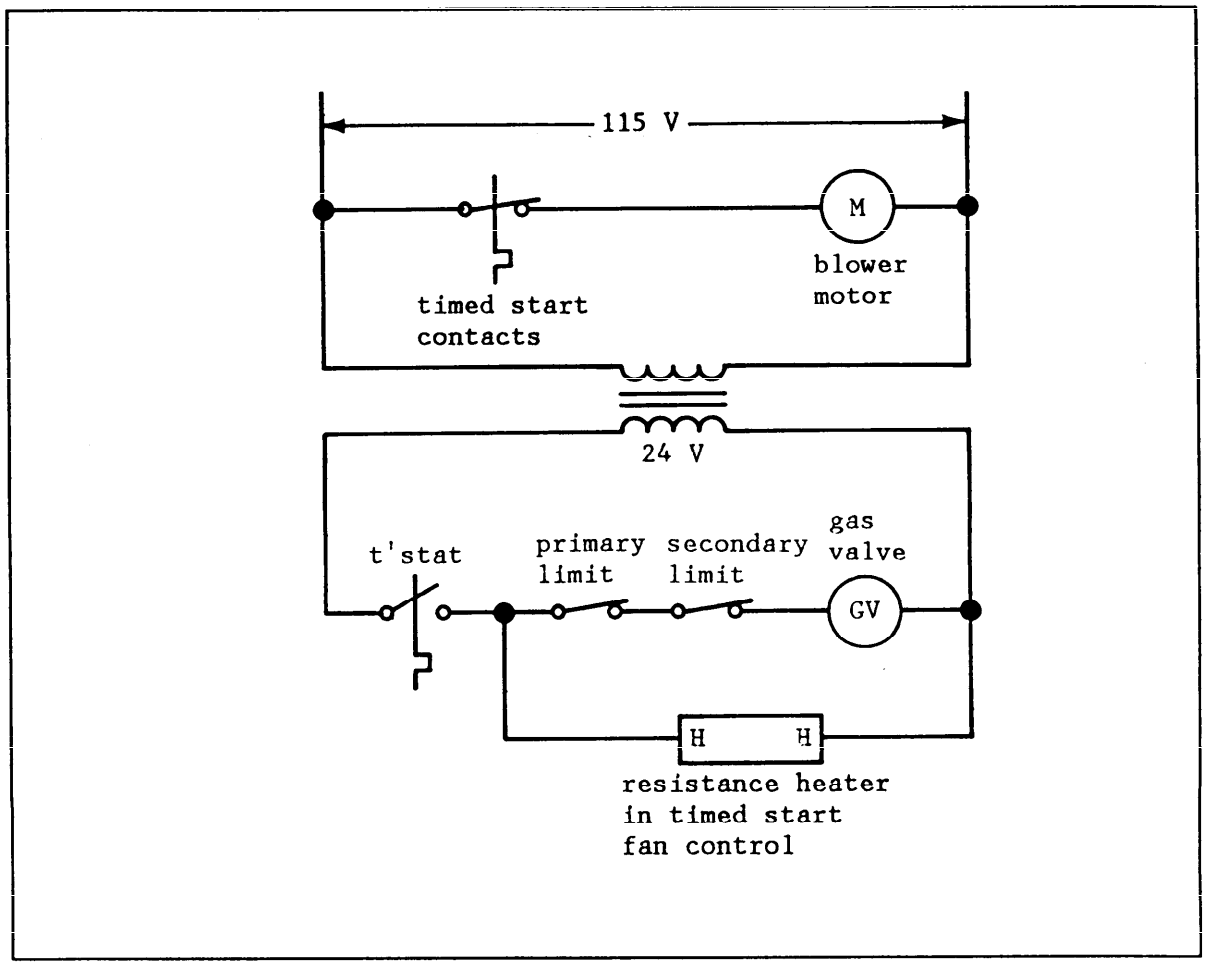

Figure 62
Horizontal or Downflow Furnace With Timed Start Fan Control

Figure 63 shows a furnace circuit with a bimetal type pilot safety. The gas valve in this case is just a simple solenoid valve, with a position for manually lighting the pilot. Once the pilot flame is lit, the pilot safety switch will remain closed, and the gas solenoid valve will energize and open each time the thermostat closes red to white.

Figure 64 shows an intermittent ignition system. The S86 module is a "black box" which is not serviceable. It must be used with a matching gas valve and pilot ignitor-sensor. When the thermostat closes, it provides 24 volts to the S86 control module. The module will immediately provide 24 volts to the PV (pilot valve) terminal, and pilot gas will be admitted to the pilot burner. At the same time, high voltage will be supplied to the ignitor-sensor assembly through the spark plug wire, and the ignitor will begin sparking.

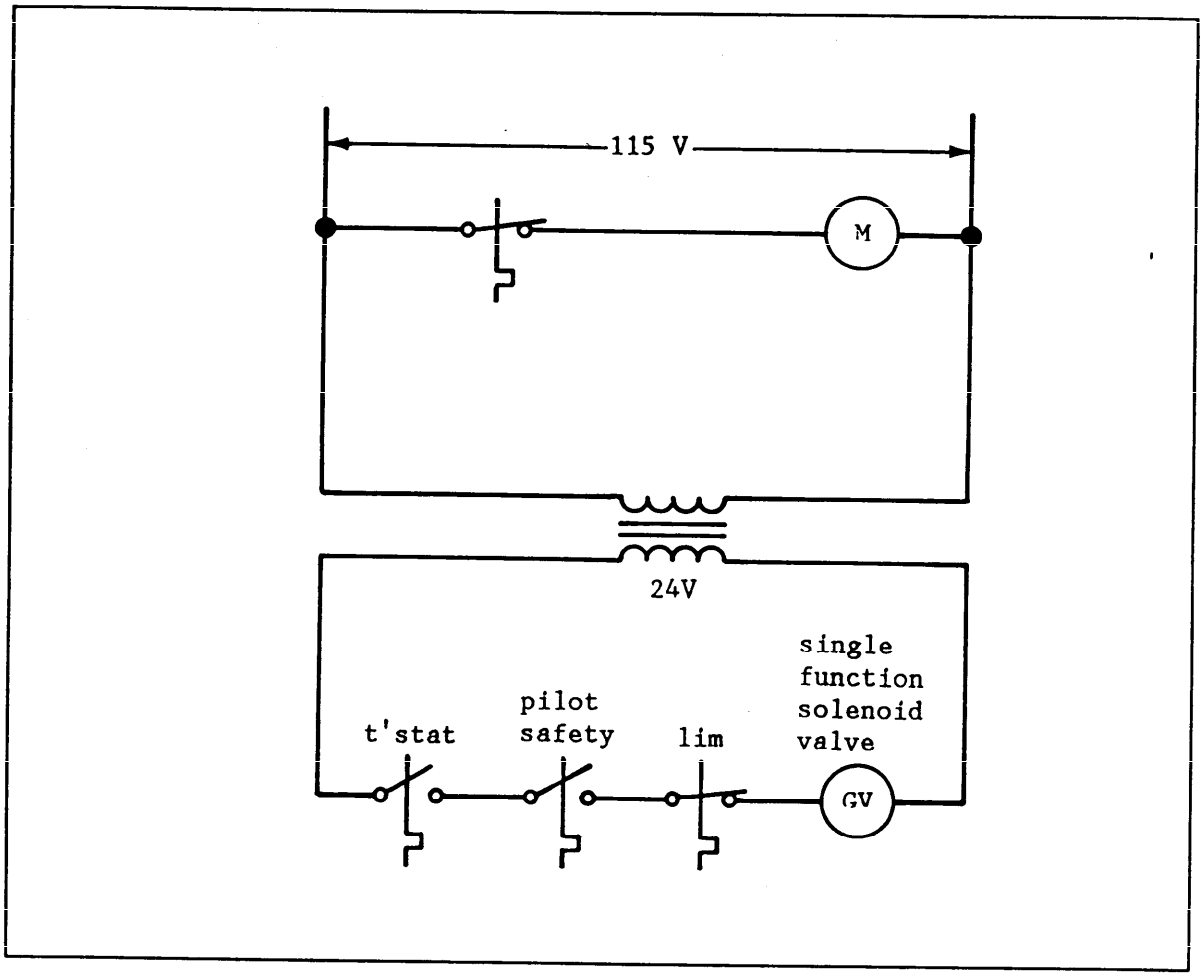

Figure 63
Furnace With Bimetal Pilot Safety Switch

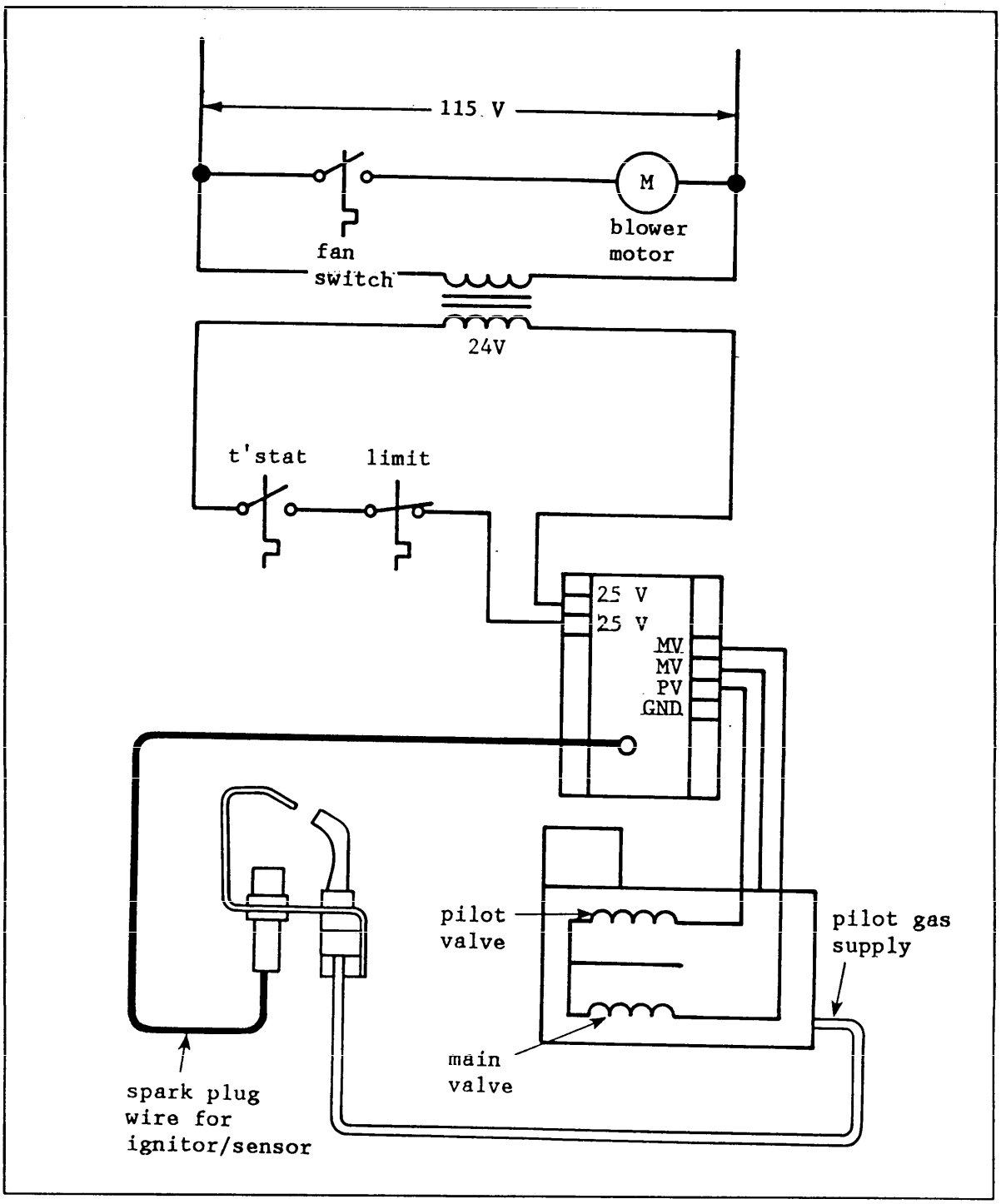

Figure 64
Honeywell S-86 Electronic Ignition Circuit

When the pilot flame has been established, it will be sensed electronically by the same wire which provided the spark. This signal is sent back to the control module, which will then stop the sparking, and energize the MV (main valve) terminal. Main gas will then be admitted to the furnace. Figure 65 gives an example of a troubleshooting sequence for an intermittent pilot system. Another type of electronic ignition is the direct spark ignition or commonly called DSI. On DSI systems, both the first and second main valves are energized when the system controller calls for heat. This allows gas to flow to the burner. At the same time a spark is generated (19,000 to 30,000 + volts) at the spark ignitor for direct ignition of the main burner.

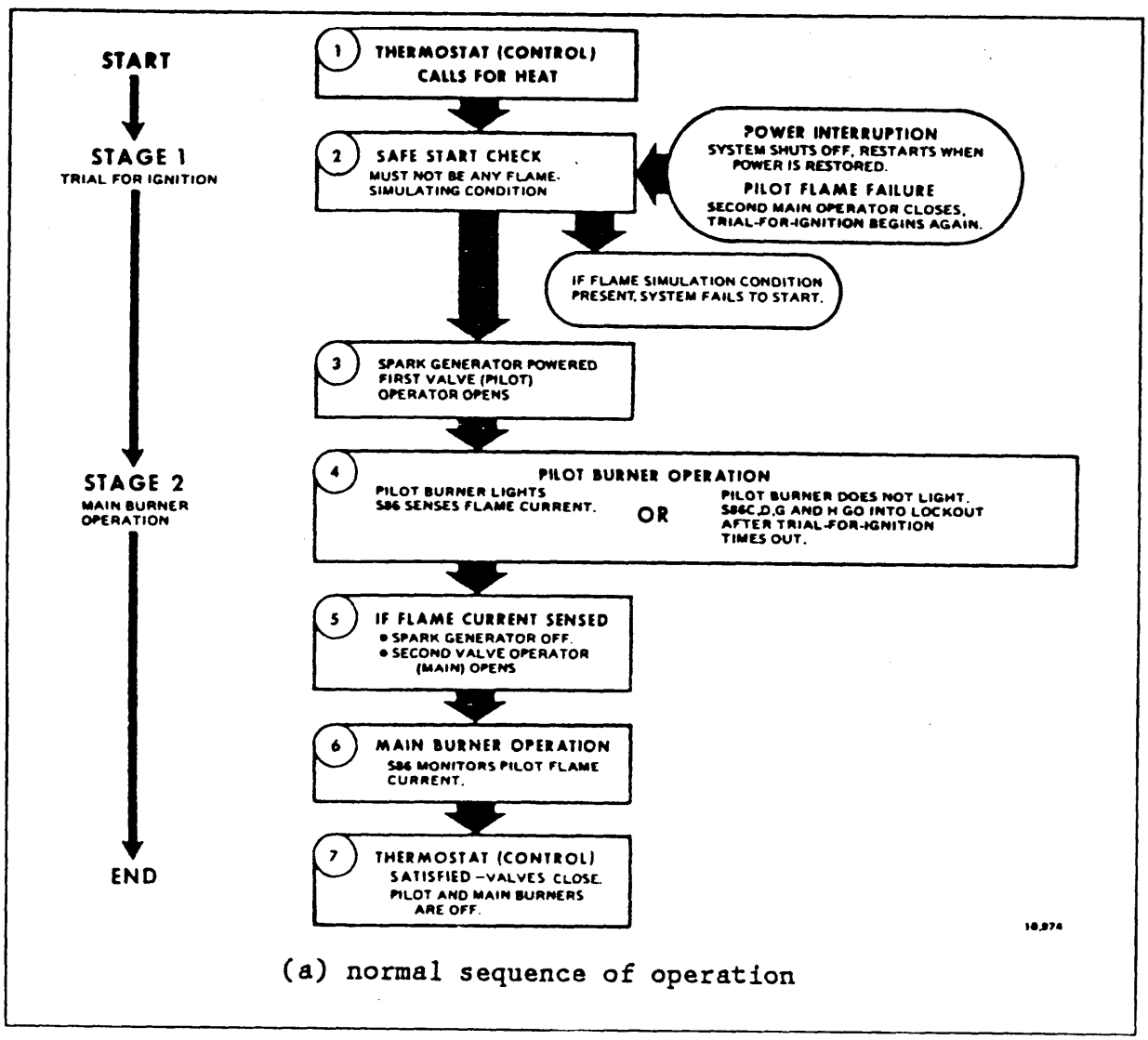

(a) normal sequence of operation

Figure 65
Intermittent Pilot System (IPS)

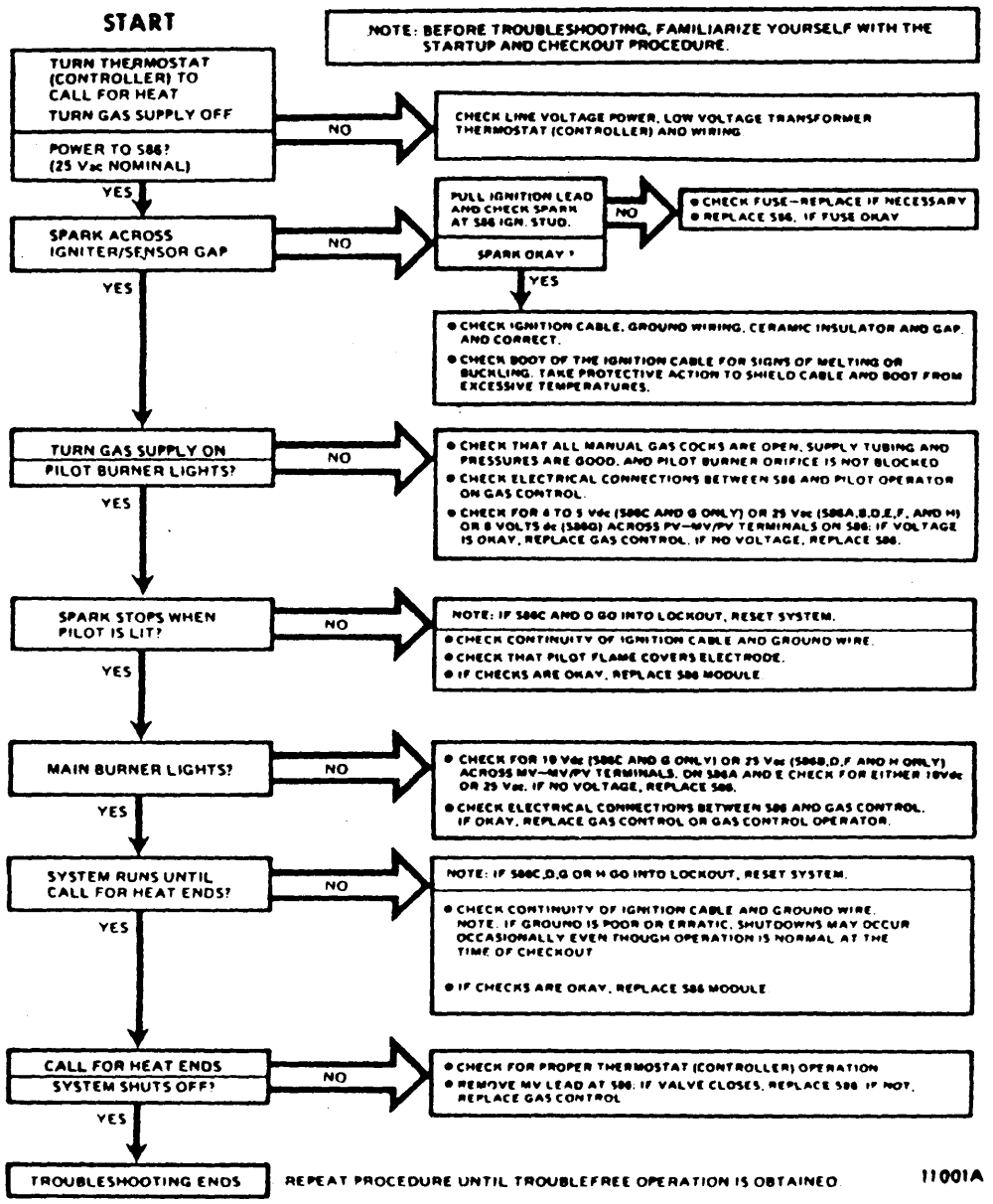

(b) intermittent pilot system troubleshooting table

Figure 65 (Continued)
Intermittent Pilot System (IPS)

If the burner fails to ignite within the trial for ignition period, the module goes into safety lockout. Figure 66 gives the troubleshooting sequence for this type of ignition system.

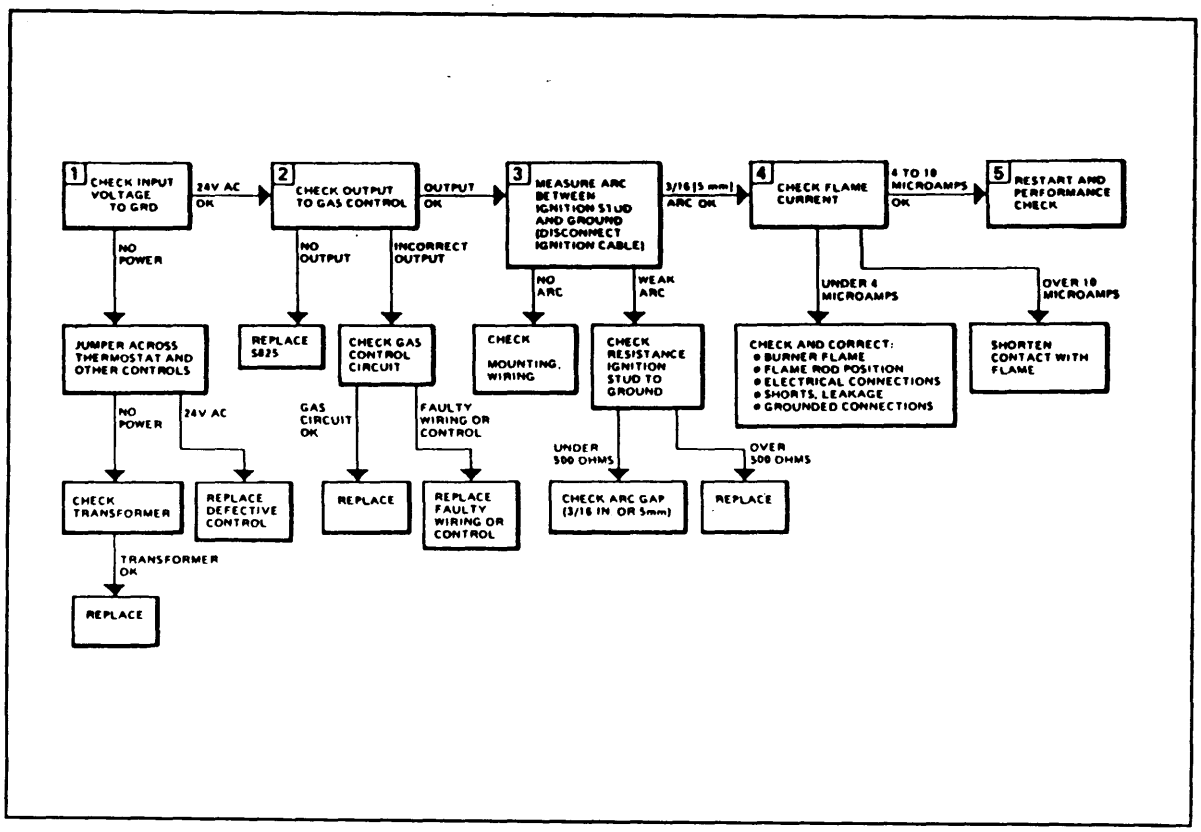

Figure 66
Direct Spark Ignition System Troubleshooting Procedure

Figure 67 shows a Carrier or BDP type of electronic ignition system. The gas valve contains three coils, called pick, hold, and main. When the pick coil is energized, it will pick up and open the pilot gas valve. When the hold coil is energized, it is able to hold the pilot valve open once the pick coil has opened it. The hold coil cannot lift the pilot valve to the open position. When the main coil is energized, the main gas valve will open. The sequence begins when the thermostat closes, energizing the pick coil and the hold coil, and providing 24 volts to the sparking module. When the pilot flame is established, it is sensed by the three wire bimetal pilot safety switch. As the bimetal switch moves, the normally closed contacts open, and then the normally open contacts close. When the normally closed contacts open, the sparker stops, and the pick coil is de-energized. The pilot valve remains open however, held open by the hold coil. When the normally open contact of the bimetal switch close, the main gas valve is opened.

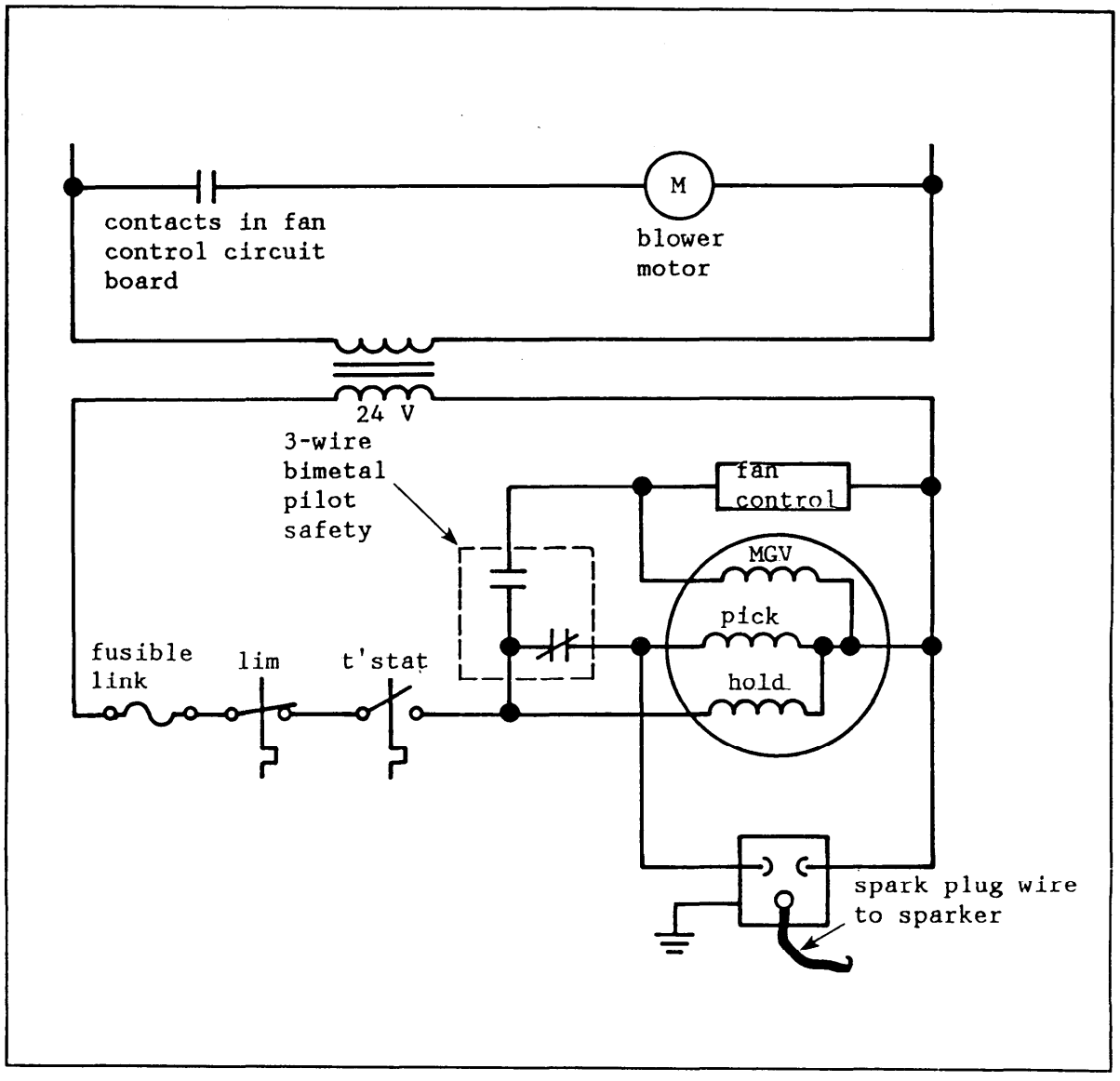

Figure 67
Carrier, BDP, Payne Pick-Hold Type Ignition

Fan control on this system is accomplished by a solid state timing device located on a circuit board in the furnace. It is not adjustable or serviceable.

Another way of accomplishing this same control scheme uses a liquid filled bulb to sense the pilot flame. The bulb operates a switch located on the top of the gas valve.

Figure 68 illustrates an automatic pilot relighting system used on commercial rooftop units. The pilot safety is a three-wire device, with a single pole double throw switch. When pilot flame is lost, the pilot safety switch returns to its normal position. A second transformer is energized through the normally closed pilot safety contacts. This transformer provides 2.4 volts to a small glow coil which is located at the pilot burner. The glow coil will reignite the pilot flame, and will operate the bimetal in the pilot safety switch. The pressure switch senses gas pressure. If, for any reason, gas is not available to the furnace, the pressure switch will prevent the glow coil from burning out.

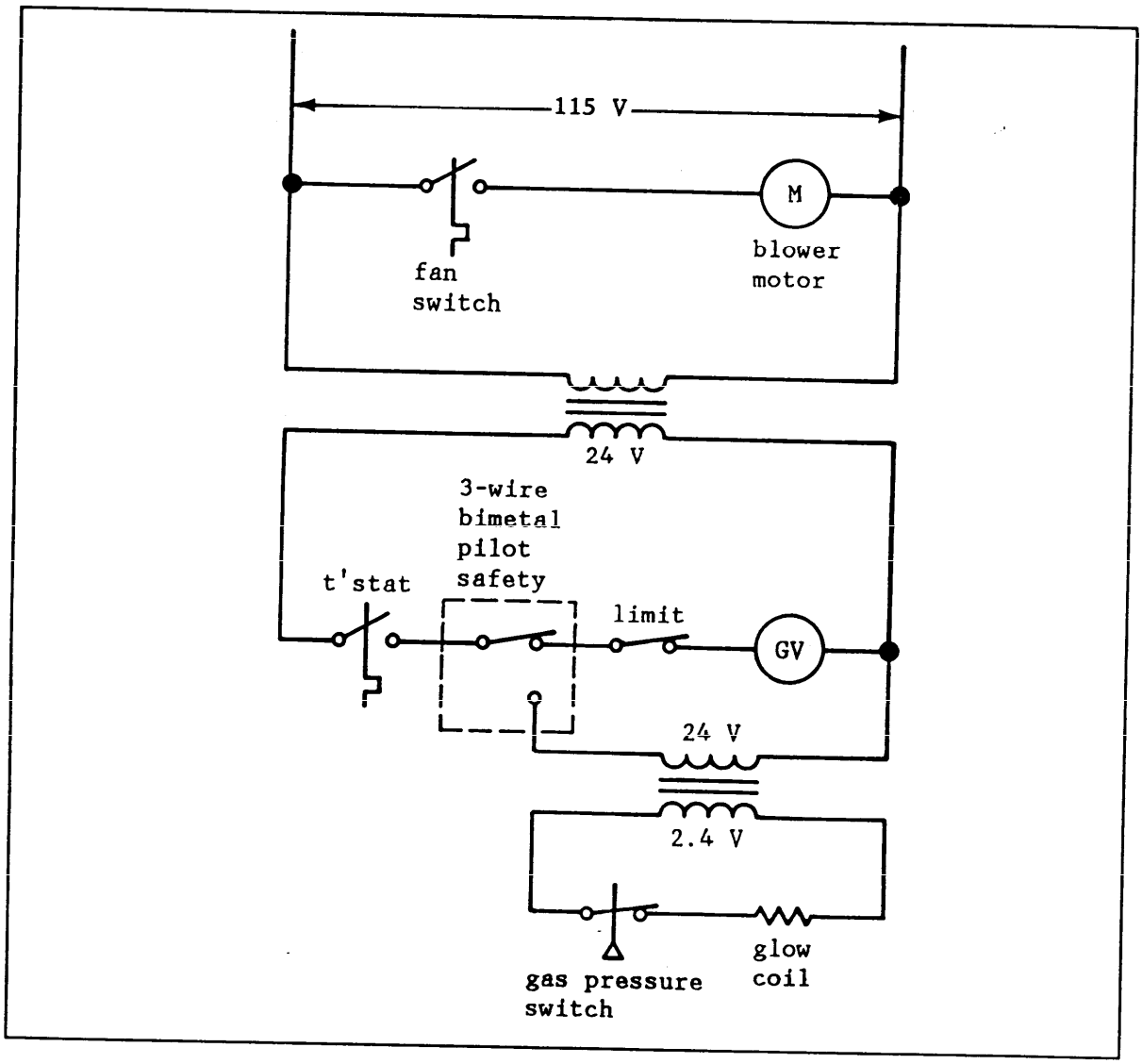

Figure 68
Automatic Pilot Reignition System Used on Roof-Top Furnaces

Figure 69 shows the same automatic reignition system, except that a 24-volt sparker module is used to relight the pilot instead of the glow coil.

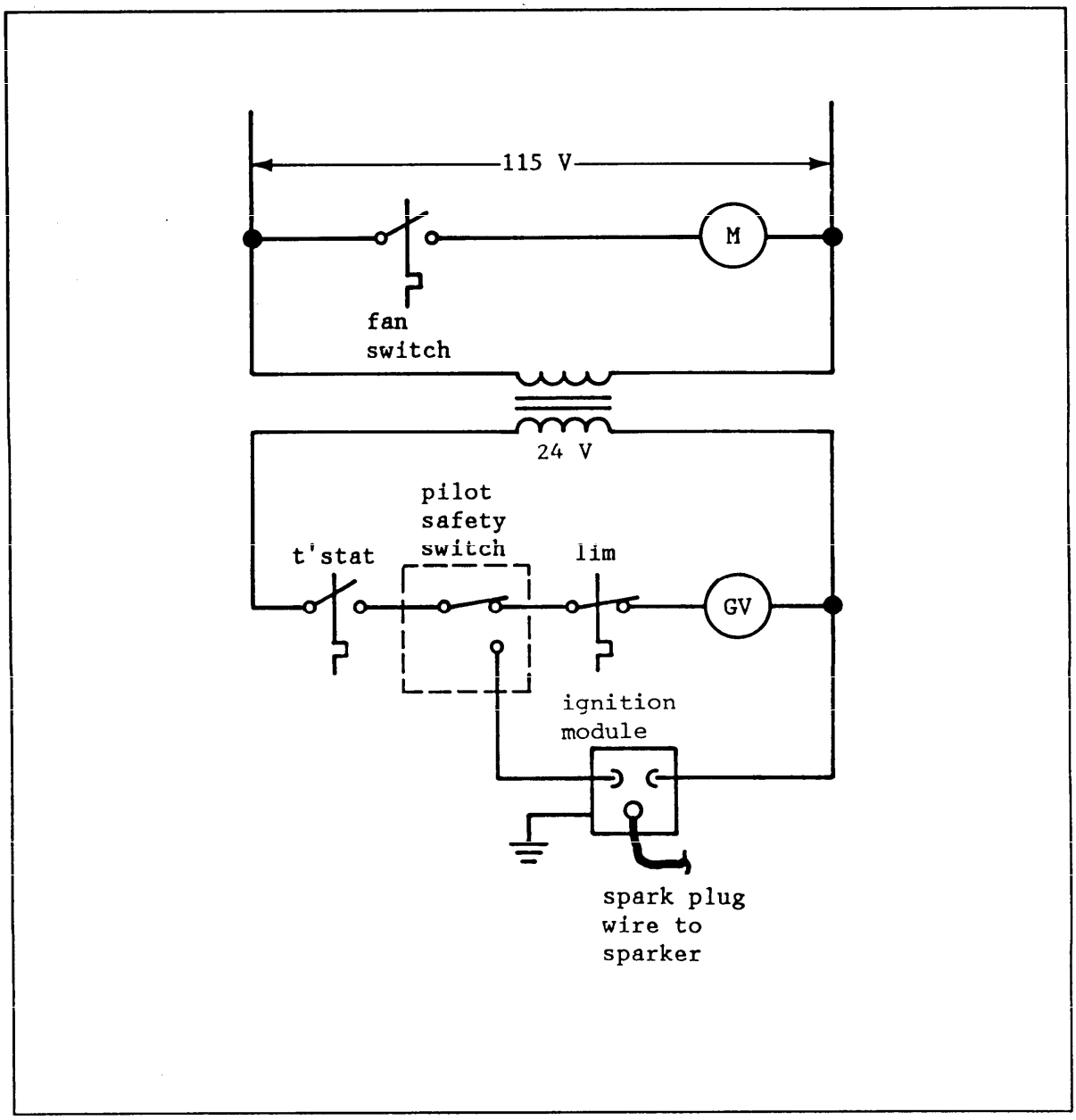

Figure 69
Automatic Electronic Reignition System

4.3 Oil Furnace Electrical Circuits. The oil furnace controls are contained in the "black box" primary control. Figure 70 shows a primary controller. On a call for heat, the 1000 ohm (1K) relay is energized, in series with the safety switch heater. The 1K relay contacts provide line voltage to the ignition transformer and the burner motor. When the cad cell detects a flame, the 2K relay coil is energized. When the 2K contacts operate, the safety switch heater is shorted out of the circuit. If the cad cell does not sense a flame after a period of time, the normally closed safety switch contacts will open, deenergizing 1K relay. This will shut down the ignition transformer, burner motor, and close the oil valve.

Figure 71 shows another primary control black box. On a call for heat, the 1K relay is pulled in, and at the same time, the ignition time heater is energized. When the cad cell senses a normal flame, the timer switch shuts off the ignition in 70 seconds. When the thermostat opens, the 1K relay drops out, shutting off the oil valve and burner. The 2K relay returns to the starting position as soon as the cad cell senses no flame. The timer prevents a restart for 2-3 minutes.

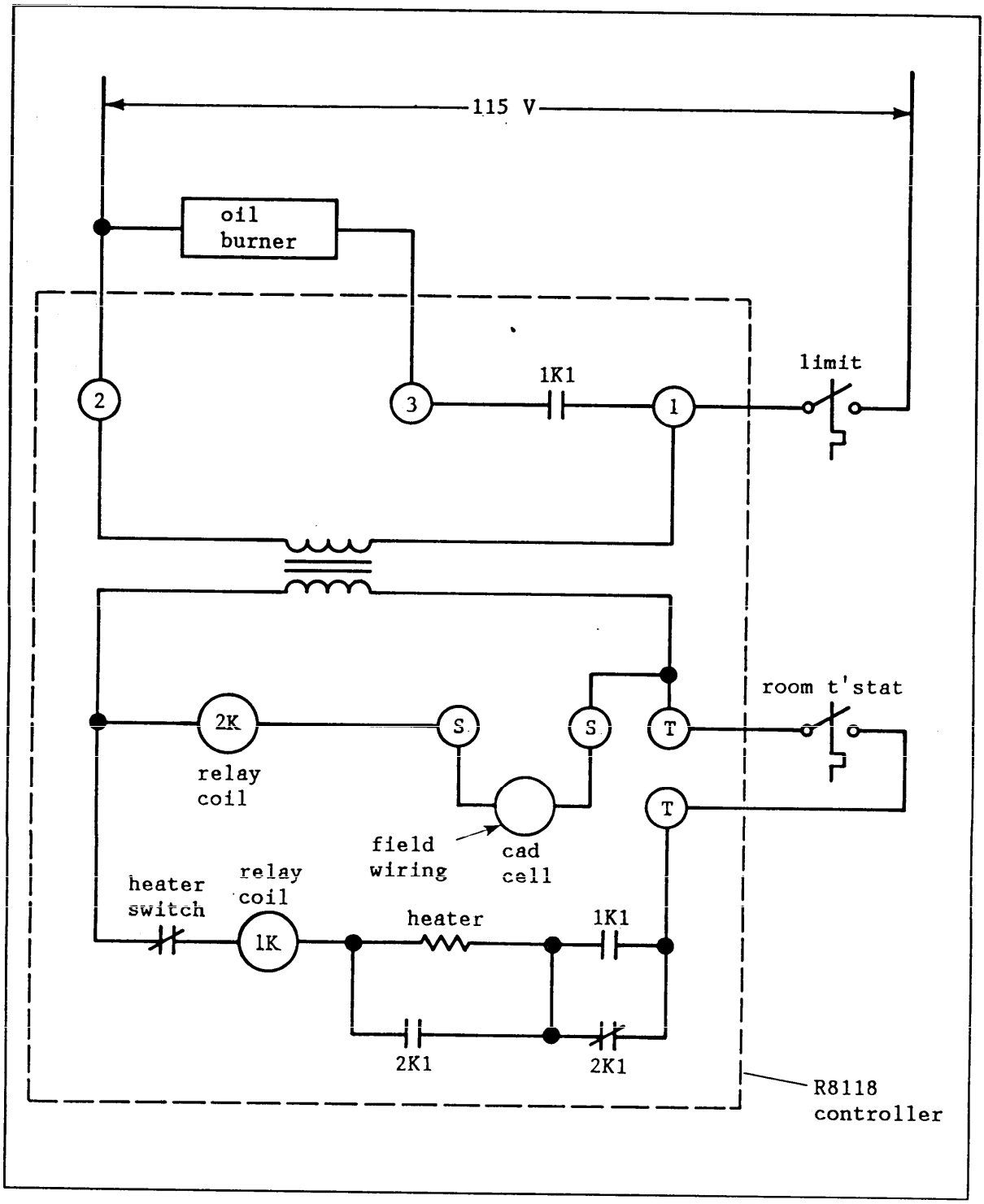

Figure 70
Honeywell R8118 Oil Burner Control

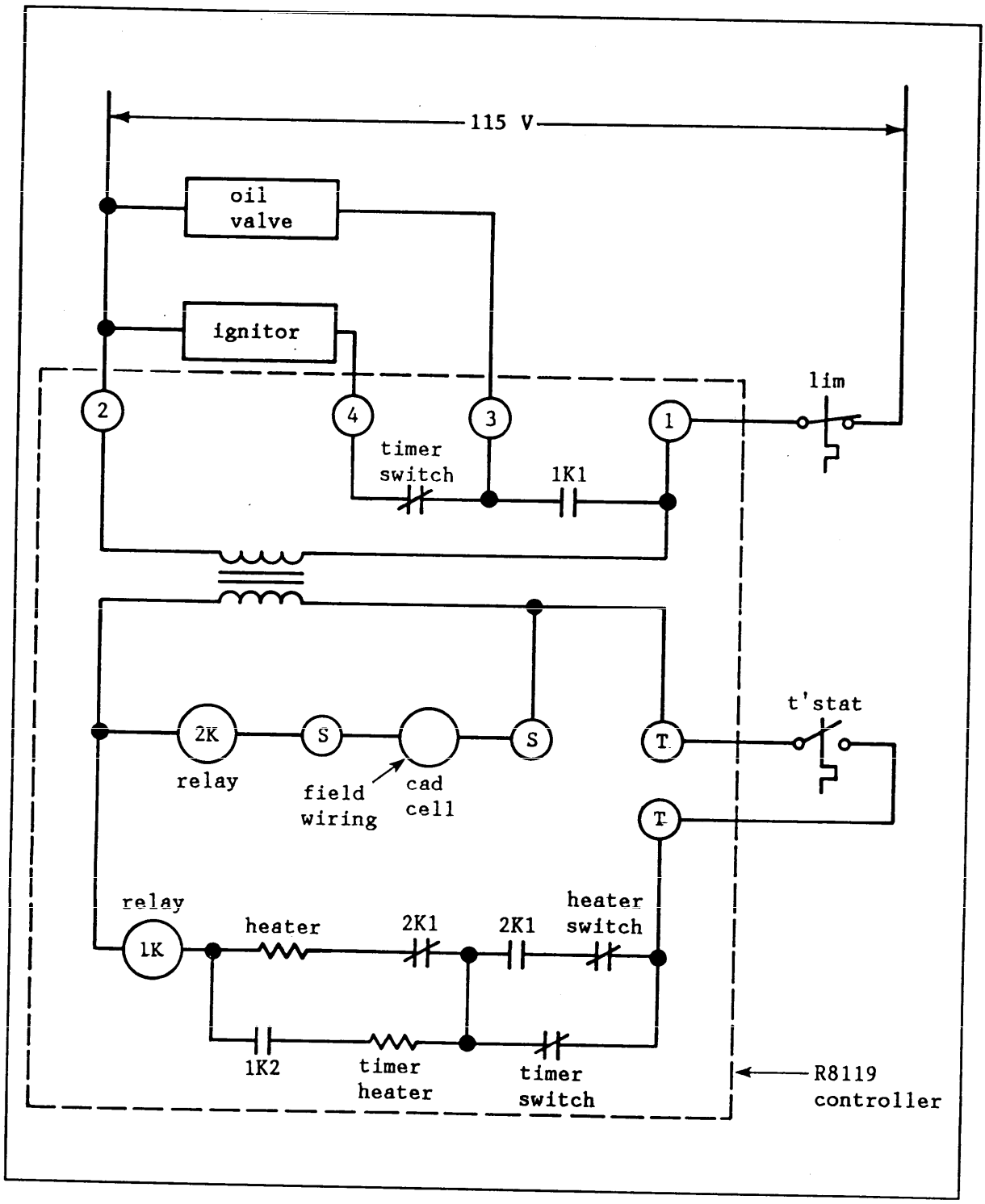

Figure 71
Honeywell R8119 Oil Primary Control

Section 4: SELF-STUDY QUESTIONS

Q4-1 What does a heating anticipator do?

Q4-2 What does a cooling anticipator do?

Q4-3 What is the approximate voltage of a low voltage thermostat?

Q4-4 What is a limit control?

Q4-5 Why does a down flow furnace have two limit controls?

Q4-6 Name two types of pilot safety devices?

Q4-7 Can the fan control on the BDP type of gas valve system be serviced?

Q4-8 Describe the operation of the two types of primary control used on oil fired systems.

Section 5: ELECTRIC HEAT

5.1 Resistance Heating. When an electric current is passed through a resistance, the electrical energy is converted into heat energy. The principle of resistance heating is used in toasters, electric ovens and stoves, electric water heaters, and electric furnaces. All electric heat is, by definition, 100 percent efficient. That is, 100 percent of the electrical energy which is consumed is converted into heat. For each kilowatt-hour of electricity which is consumed in an electric heater, 3,415 Btu of heat is produced. Some electric companies tout this efficiency in order to imply that operating costs are low. This is not the case. Even though there is no waste of the electricity consumed by the electric heater, the cost per Btu purchased is much higher for electricity than for gas or oil. Electric resistance heat is low in first cost, units are relatively small and compact, and are sometimes used where gas or oil are simply not available. Where operating costs are important and electricity is the only source of energy available, the first cost and operating costs of an electric furnace should be compared to a heat pump system.

5.2 Electric Furnace. Figure 72 shows a cutaway of an upflow electric furnace. Its configuration is similar to that of a gas furnace, except for the following important major differences:

a) Instead of a heat exchanger, the blower sends the room air through an electric heating element.
b) There is no flue stack. There are no products of combustion to remove, and 100 percent of the heat from the elements is transferred to the air.
c) The furnace uses a 230-volt power supply instead of a 115-volt power supply.
d) When the thermostat calls for heat, the electric heating element and the fan motor are energized simultaneously. The heating element can never be allowed to operate without the fan, or the element will overheat and burn out.

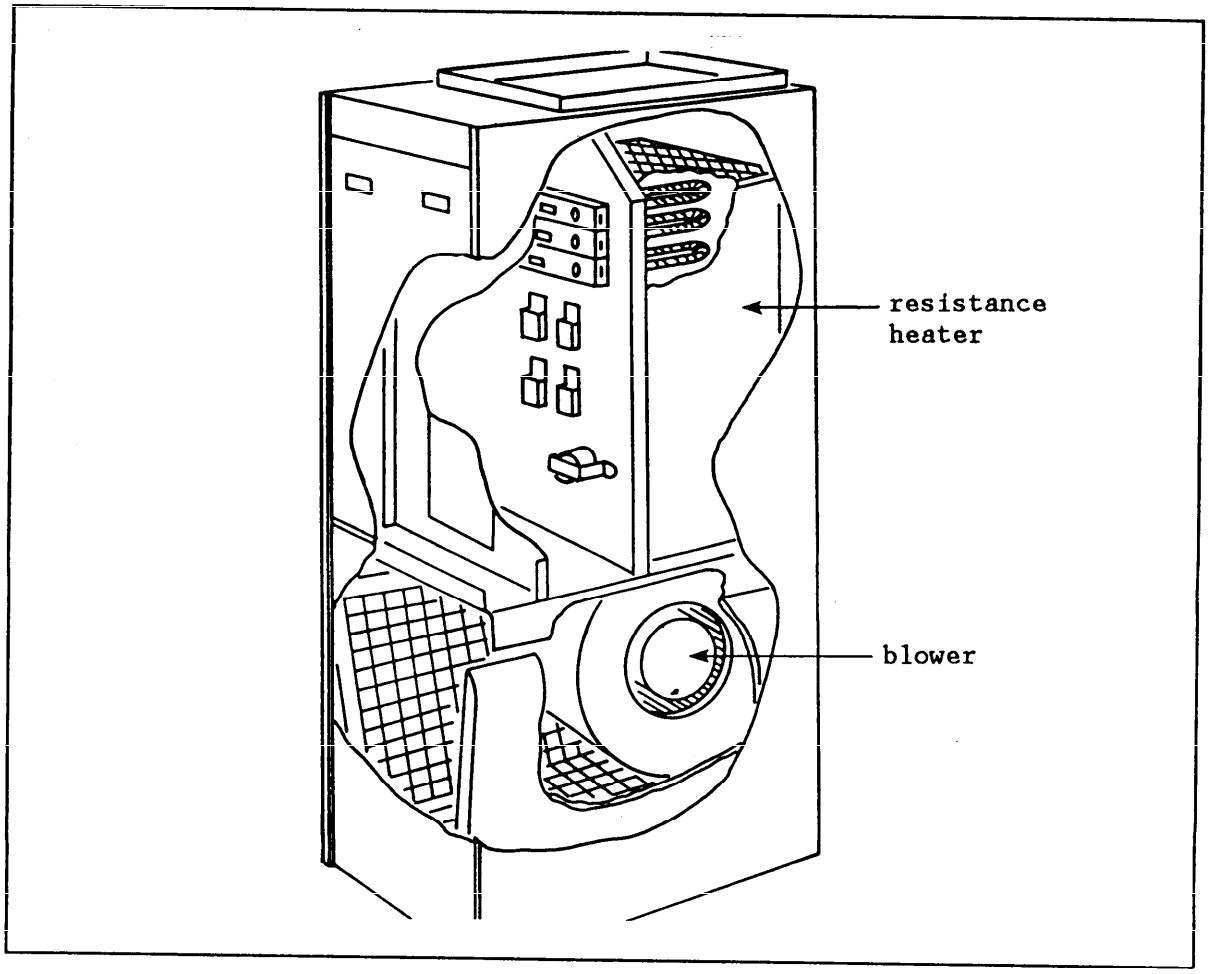

Figure 72
Electric Furnace

5.3 Heating Element. Figure 73 shows a heating element used in an electric furnace. It consists of a long spiral-wound wire made of a nickel and chromium alloy commonly called "nichrome." A furnace will use several of these heating elements. Each element will draw between three and eight kilowatts. The framework provides an insulated support for the nichrome element, and prevents the wires from touching. When the heating element is operating, there is a 15- to 25-amp current passing through the uninsulated wire at 230 volts. It is imperative that you do not touch the heater wire while it is operating. As a safety precaution, electric furnaces have an electrical interlock on the access panel to the heater elements. When the access panel is opened, the heater element is de-energized.

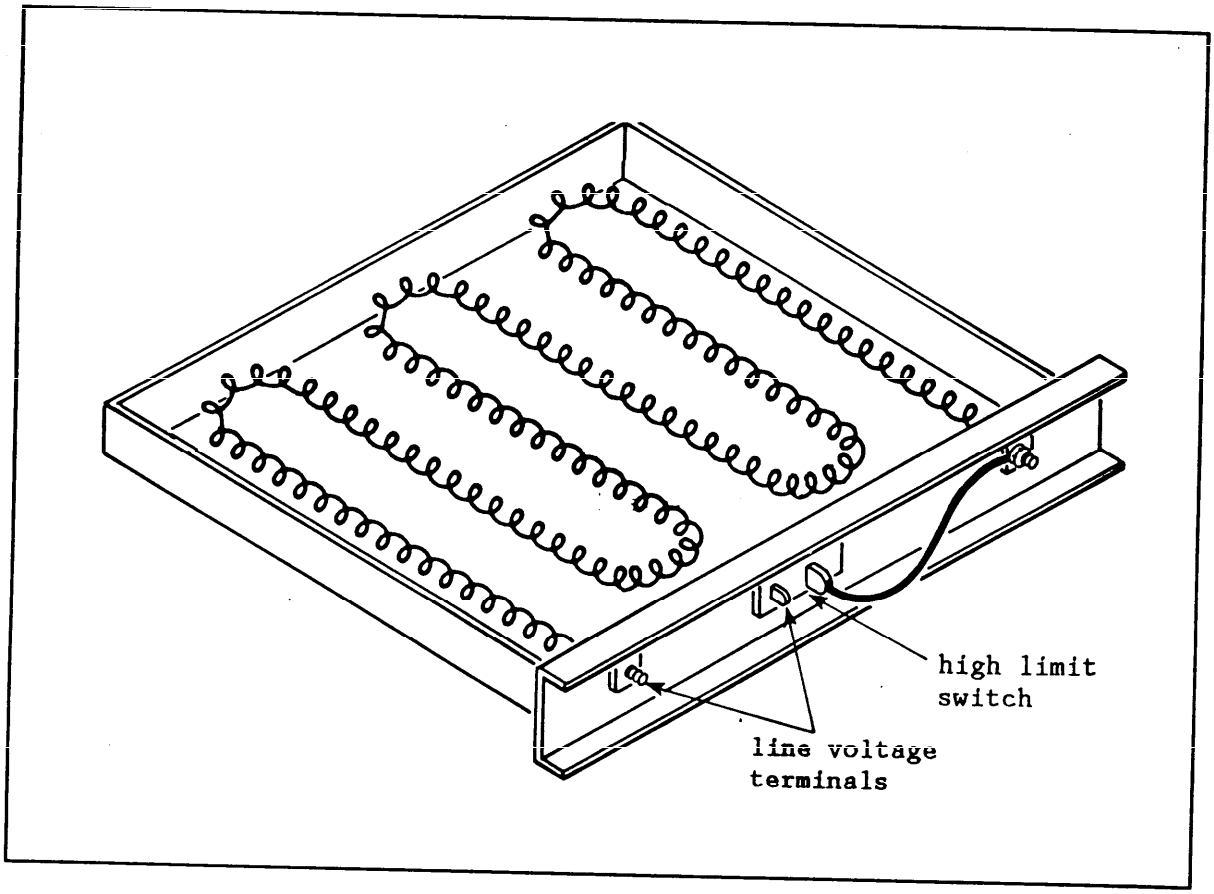

Figure 73
Electric Heating Element

The furnace control panel will have a 20- to 40-amp cartridge fuse on each of the two legs of each heater. Therefore, an electric furnace with three 5-kilowatt heaters would have six 30-amp cartridge fuses.

In addition to the large fuses which protect the furnace wiring against a shorted heating element, there is also a thermal cutout and a limit switch mounted on the heater element. The limit switch senses the air temperature around the heating element. It will de-energize the element if the limit setpoint is reached (usually between 140 and 190 degrees F). The limit switch is a bimetal type of element which will open on a rise in temperature, and will reset itself when the element cools down. There is a nonadjustable differential between the cutout and cutin of 25 to 40 degrees F. This prevents the heater from short cycling.

The thermal fuse will also open if it detects an abnormally high temperature around the heating element. Its function is the same as that of the limit switch, and acts as a backup safety switch.

5.4 Operating Sequence. When the thermostat calls for heat, it energizes a small resistance heater in a heat relay (Figure 74). This heat relay is identical in operation to the timed start fan control used in downflow gas furnaces. The difference is that the contacts are rated for the higher amp draw of the electric heating elements as compared to a blower motor. When the heat generated in the heat relay resistance heater is enough to warp a bimetal switch, the normally open contacts of the relay will close, energizing the heater element.

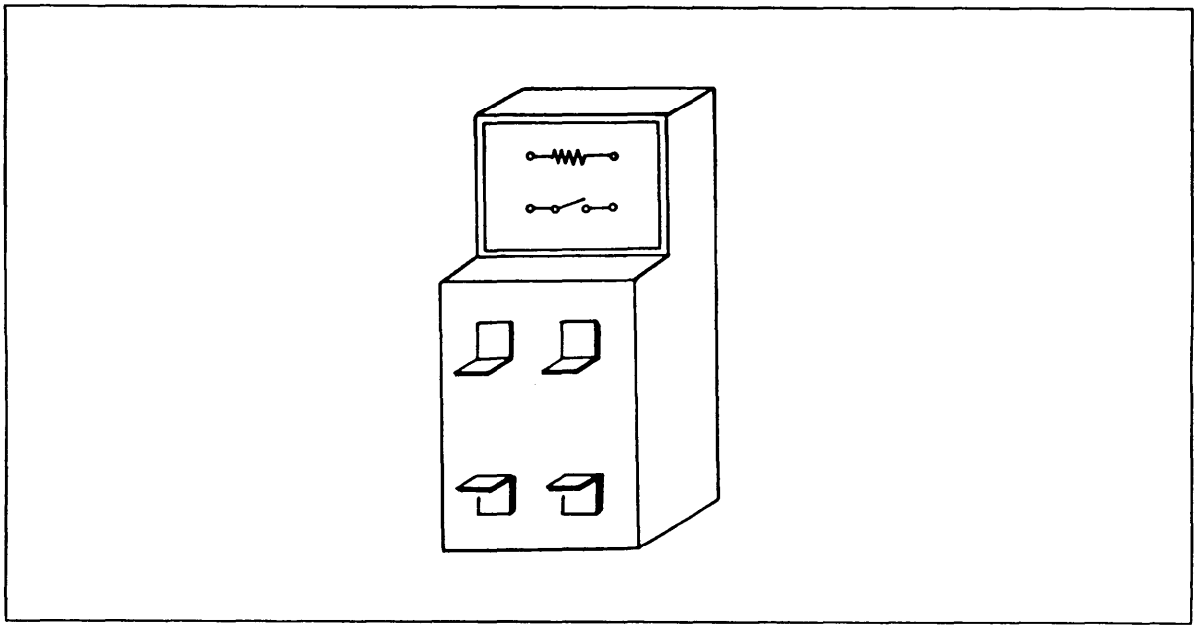

Figure 74
Heat Relay Used for Electric Heat Element Sequencing

Where there are two or more heater elements, the control may be staged. A two-stage thermostat may be used. It operates as follows:

a) When the room temperature drops below the thermostat set point, one heater element is energized.
b) If the heat produced by the first stage of heating is insufficient, the room temperature will continue to drop. When it drops 2 degrees F below the first stage setpoint, a second heater element is energized.

In this way, the furnace can operate at either half capacity or full capacity, depending upon the heating requirements of the room.

5.5 Element Staging-Single-Stage Thermostat. Electric furnaces will have between two and six heating elements. In order to reduce the surge of electric current when the thermostat calls for heat, this scheme was devised

to sequence the elements. A single-stage thermostat energizes a 24-volt heater in heat relay No. 1. When the contacts in heat relay No. 1 close, 240 volts pass to heating element No. 1.

In series with the first heating element is a second heat relay. It is different from the first heat relay in that its heater element is rated at 230 volts. When heating element No. 1 comes on, the resistance heater in heat relay No. 2 is also energized. After a time delay, the contacts in heat relay No. 2 close, and bring on the second heating element. If there is a third heating element, there would be a 230-volt heater in heat relay No. 3 which powers up when heating element No. 2 is energized. There could be as many as six different heat relays in an electric furnace with six heating elements.

5.6 Blower Control. Figure 75 shows a blower control which is used on electric furnaces. This control will energize the blower motor whenever the heating element in the furnace is energized. It is a solid state device which has an electronic circuit connected to a current sensing loop mounted on the outside of the blower control. A wire which supplies current to the heater element passes through the current sensing loop. Whenever this element is energized, the current sensing loop will cause a set of normally open contacts in the blower relay to close, energizing the fan motor.

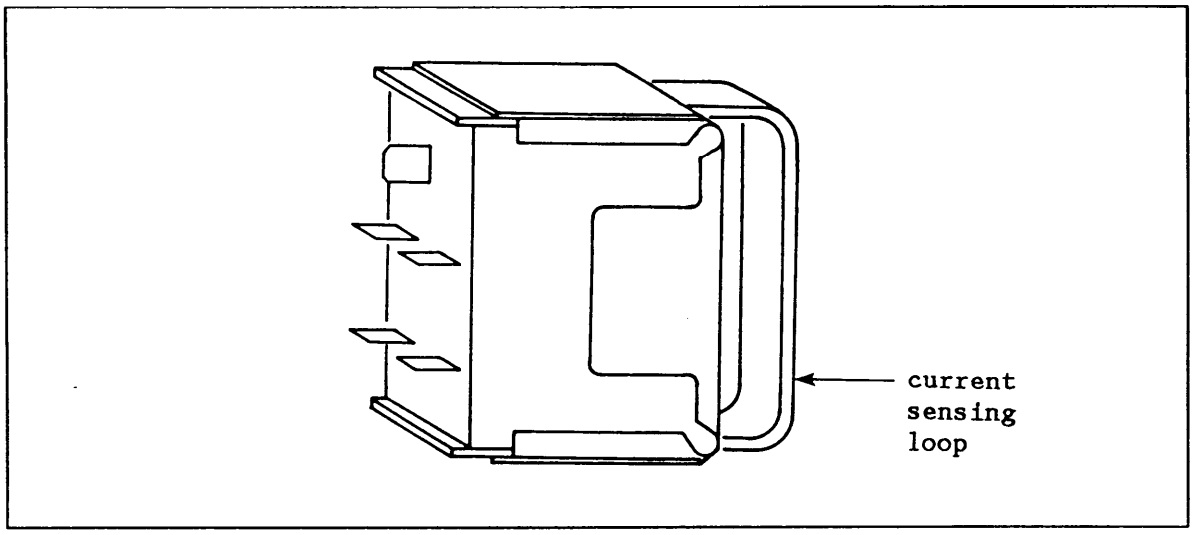

Figure 75
Current Sensing Blower Control

5.7 Electric Furnace Electrical Circuits. Figure 76 shows a simple electric furnace schematic. It has one heating element. It is energized through the 24-volt heat relay by the operation of the room thermostat. The heater element circuit also contains two fuses (one on each leg), a limit switch, and a thermal fuse. The blower is operated by the blower control which senses the flow of current to the heating element.

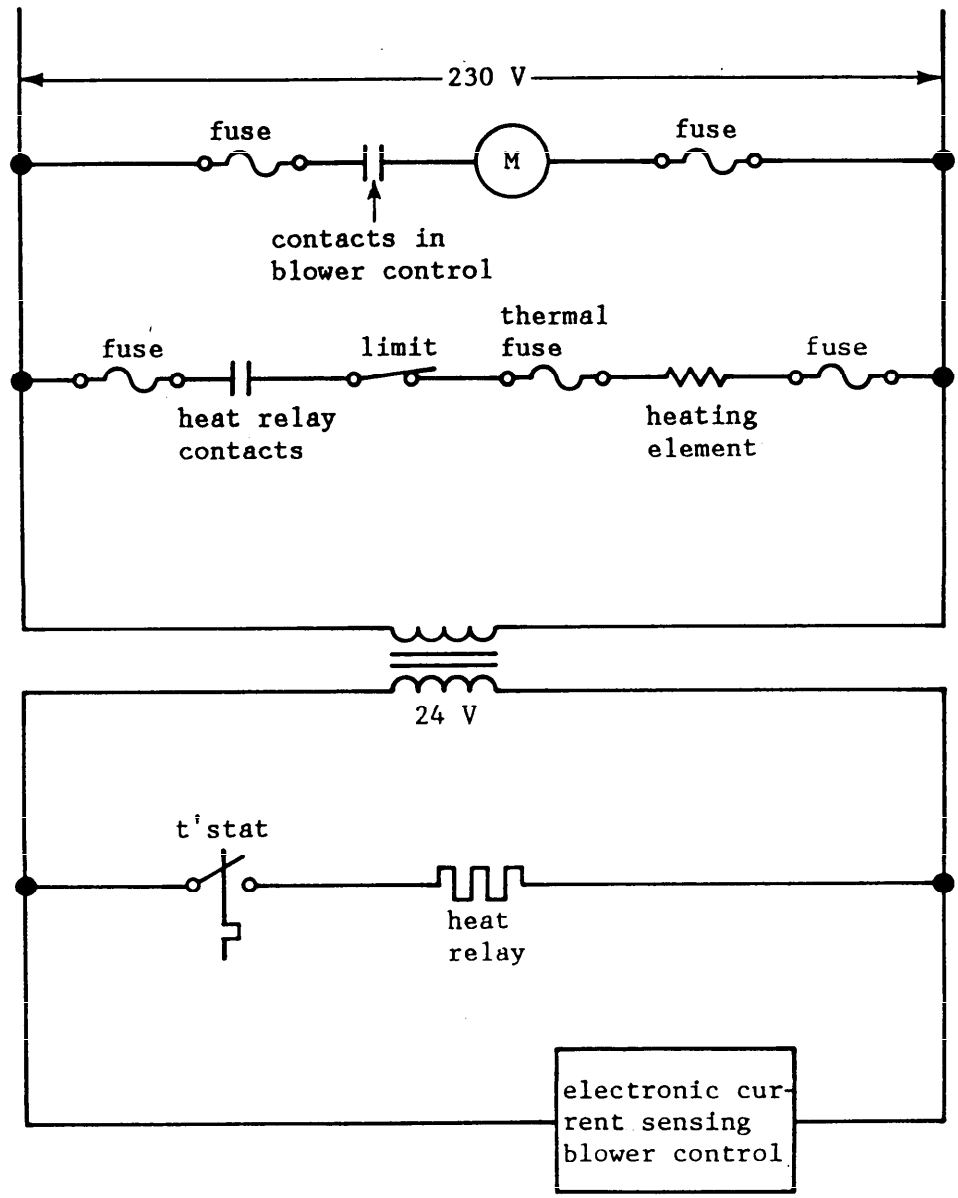

230 V components use fuses in both legs because each leg is "hot."

Figure 76
Electric Heat Single Element

Figure 77 shows the same electric furnace, but with the two elements operated by two different switches in the two-stage thermostat.

Figure 78 shows three different heating elements operating off a single-stage thermostat. The three elements are sequenced on, with a time delay after each heater comes on. The resistor in heat relay No. 1 is 24 volts, while the resistors in heat relays No. 2 and No. 3 are 230 volts.

Figure 79 adds an outdoor thermostat to a two-element furnace operated by a single-stage thermostat. The contacts of the outdoor thermostat are wired in series with heating element No. 2. Unless the outdoor temperature drops to the setting of the outdoor thermostat, the second-stage will not be allowed to come on. In order for the second-stage element to be energized, the outdoor temperature must be low and at the same time, the second stage of the thermostat must be calling for heat. By operating on the first stage only, the furnace will stay on for a longer period of time, and the space will be held at a more even temperature.

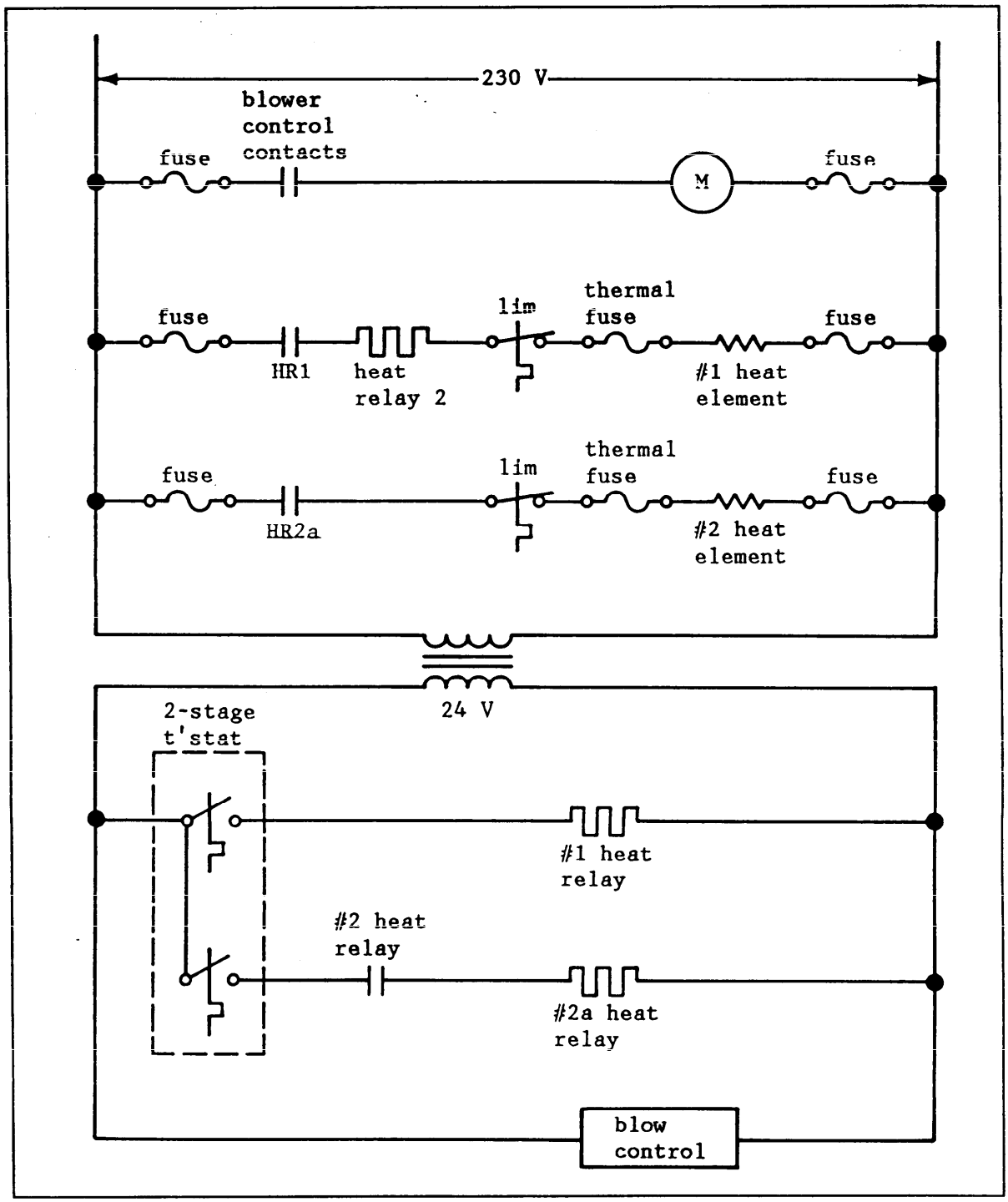

Figure 77
Electric Heat - Two Elements Operated From a Two-Stage Room Thermostat

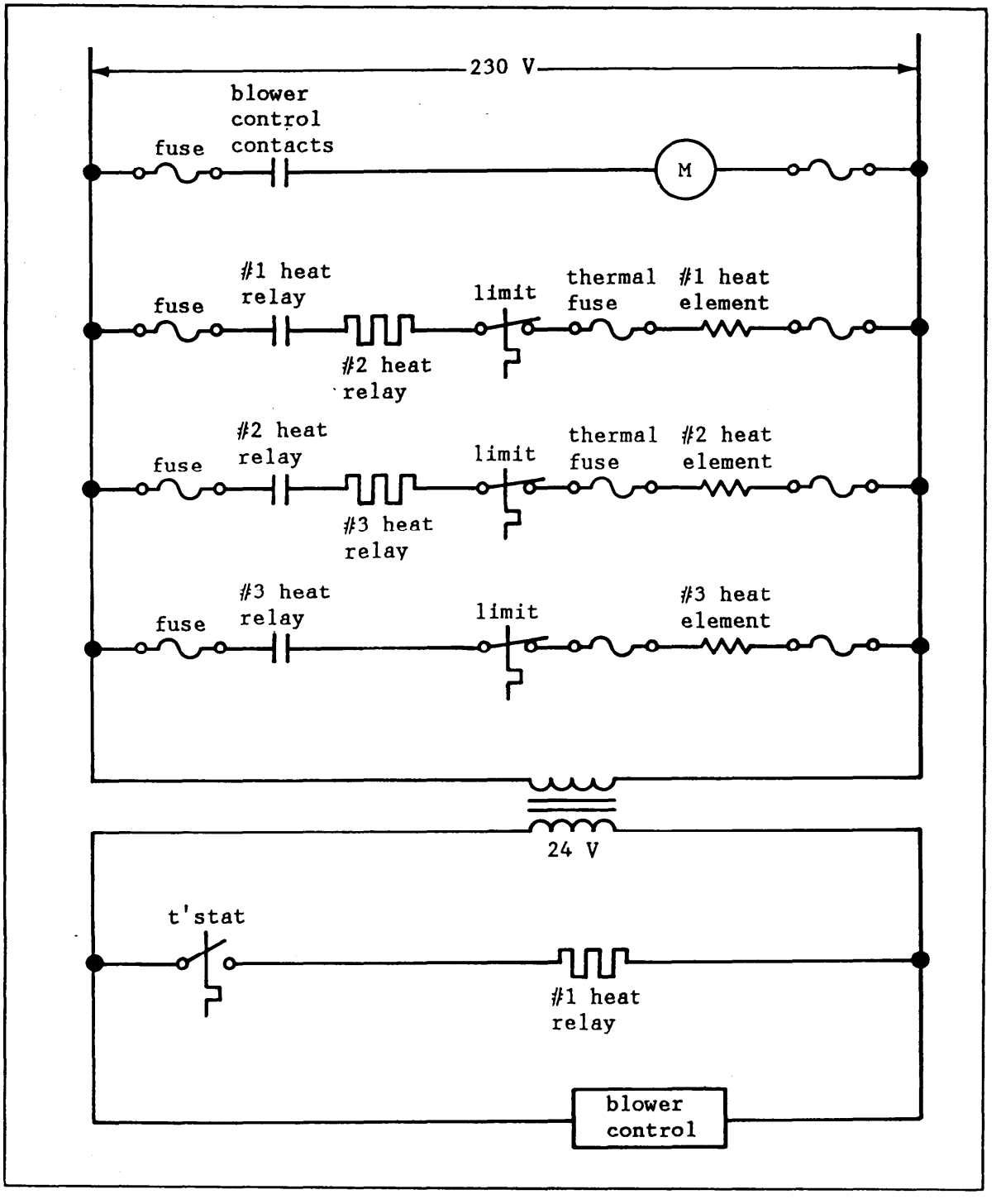

Figure 78
Electric Heat - Three Elements Sequenced From One Room Thermostat

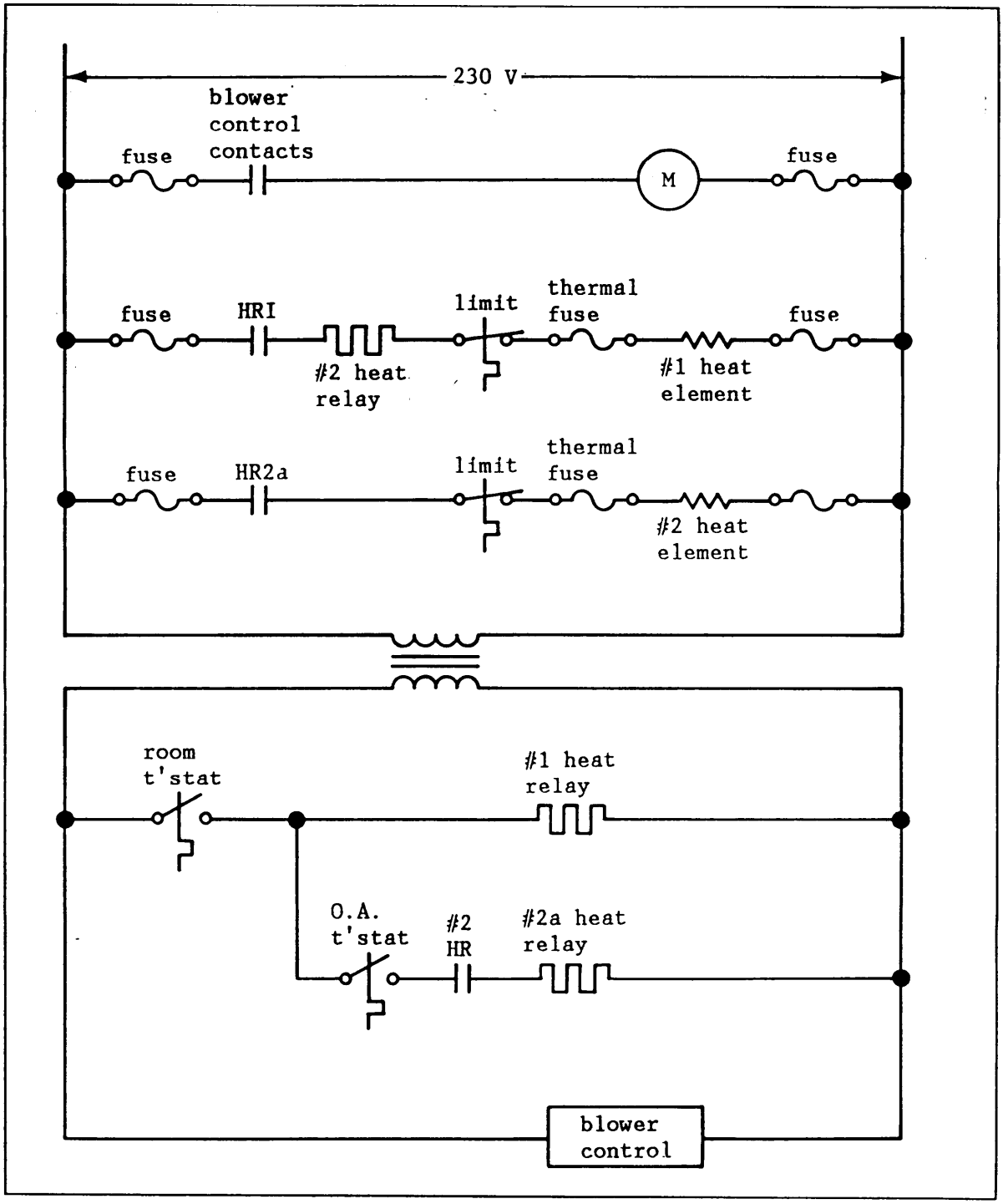

Figure 79
Electric Heat - Two Elements Sequenced From One Room Thermostat and an Outdoor Thermostat

Section 5: SELF-STUDY QUESTIONS

Q5-1 What are the disadvantages of using resistance heating when compared to a heat pump?

Q5-2 What is nichrome wire?

Q5-3 What is a heat relay in an electric furnace?

Q5-4 What is sensed to determine when to energize the furnace blower fan?

Section 6: STEAM AND HOT WATER SYSTEMS

6.1 One-Pipe Hot Water System. The one-pipe (Figure 80) hot water system is used only in small residential systems or found in older systems. Water from a hot water boiler is stored at 180 degrees F. At the first room heater, a portion of the 180 degrees F water is diverted into a branch pipe into the heater. This diversion is accomplished by use of a device such as the monoflow fitting shown in Figure 81. The velocity of the water in the main at this point is slower than the velocity flow in the venturi, due to the main's diameter being larger. The higher velocity flow through the venturi in the monoflow fitting causes a pressure reduction which draws the water up into the room heater, and back into the main.

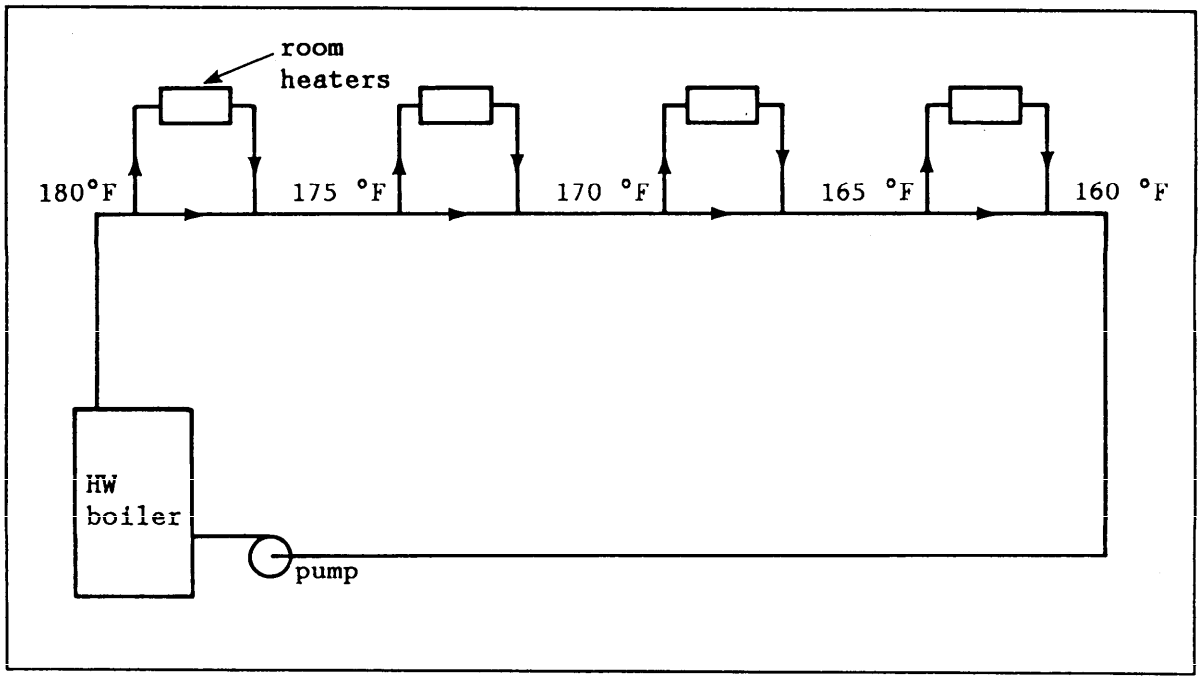

Figure 80
One-Pipe Hot Water System

The disadvantage to this system is that the water temperature in the main becomes lower and lower as each successive heater removes some of the heat. The last heaters on the line may not get water at a sufficiently high temperature to do enough heating. To be able to provide the same heat capacity, the heaters at the end of the line must be physically larger than the heaters at the beginning of the line. The only advantage to the one pipe water system is the low piping cost.

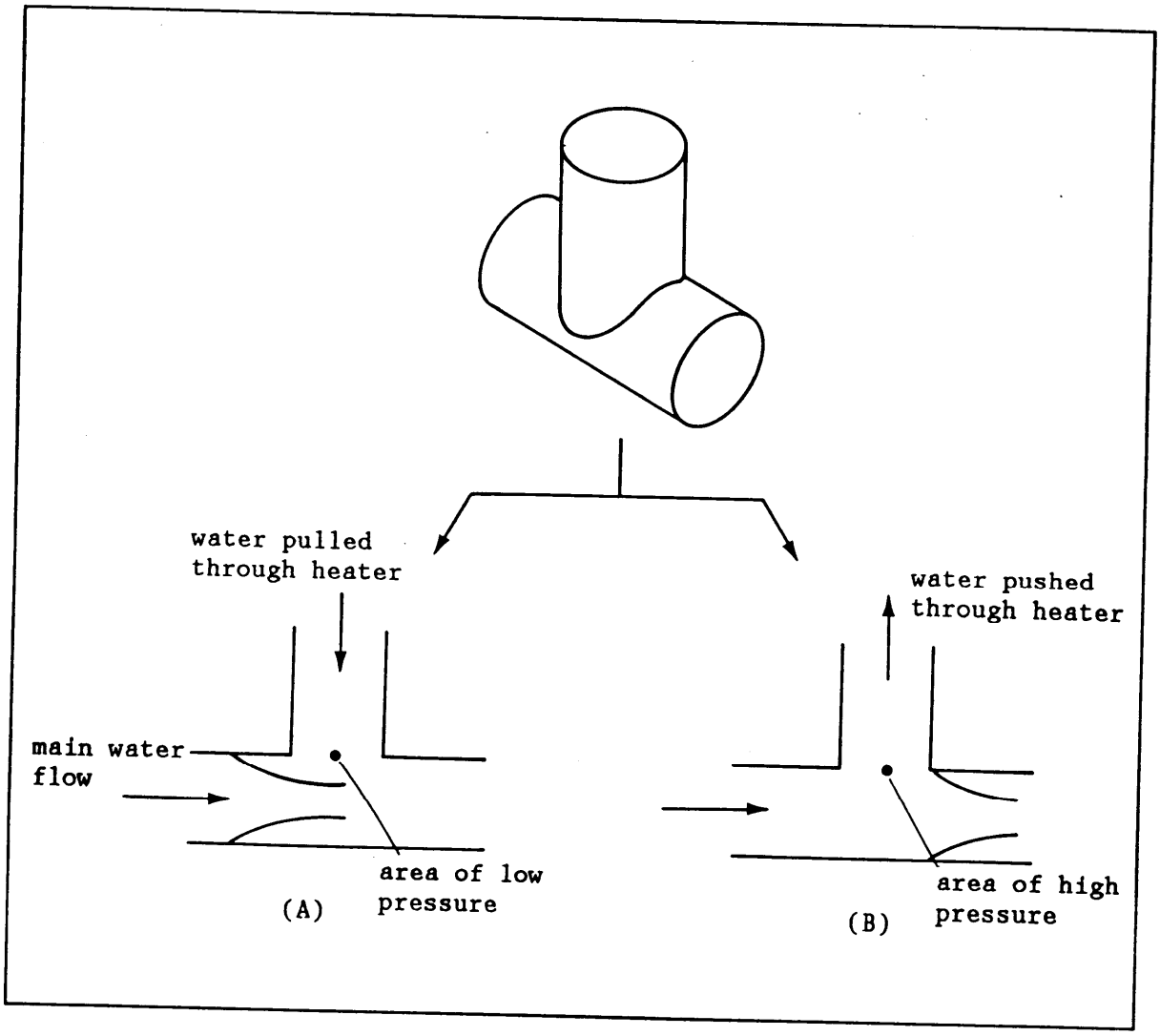

Figure 81
Monoflow Fittings - Used on Return Side (A), Supply Side (B), or Both Sides of a Hot Water Heater

6.2 Two-Pipe Water System. The two-pipe water system shown in Figure 82 uses a supply main and a return main. The temperature in the supply main remains at 180 degrees F, available to each of the heaters. When each heater uses some of the 180 degrees F water, the cooler return water is collected in the return header. This system shown is called a two-pipe direct return system. As each water flow exits from a heater, it is routed directly back to the hot water boiler. This presents some problems in obtaining balanced water flows to all the heaters. The heaters near the boiler have the shortest supply and return piping lengths, and they will tend to receive too much water. The heaters at the end of the line may be starved for sufficient water. Balancing valves should be installed in each of the heater branch lines to balance the flows.

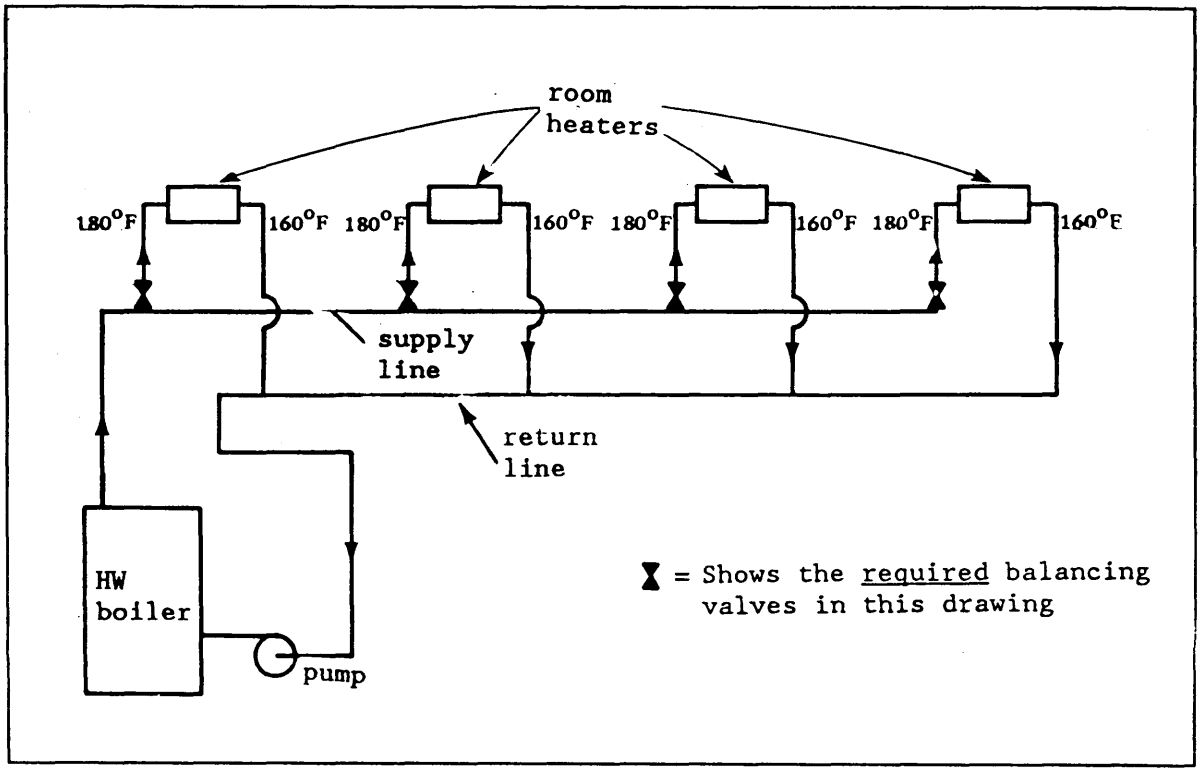

Figure 82
Two-Pipe Direct Return Hot Water System

Figure 83 shows another two-pipe system, but this one is reverse return instead of direct return. The heater closest to the boiler has the shortest supply piping length, but it has the longest return piping length. The piping lengths for each of the heaters tends to be more equal with the reverse return system, and the flows tend to be more self balancing. The added cost for this advantage is the additional length of return piping required.

Two-pipe systems may be used either on hot water or chilled water systems. Some commercial installations will use a two-pipe system which may be used with either a hot water boiler or a water chiller (Figure 84). The operator will choose the mode of operation, either heating or cooling, but not both. The shortcoming of this type of system is that if some areas need heating while others need cooling (which is very likely), somebody is going to be very uncomfortable.

6.3 Control of Water Coils. The amount of heating done by a water coil may be controlled in one of two methods:

a) Control the air flow across the coil
b) Control the water flow through the coil

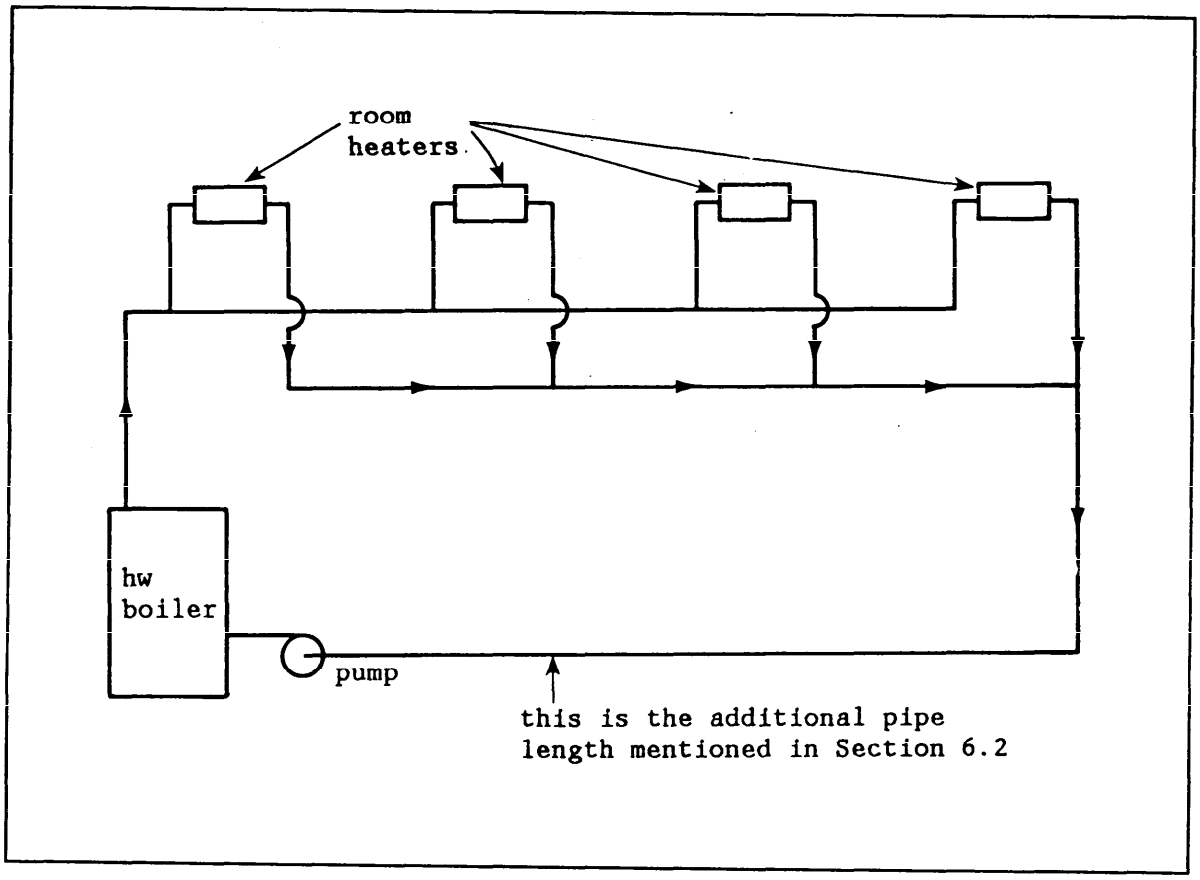

Figure 83
Two-Pipe Reverse Return Hot Water System

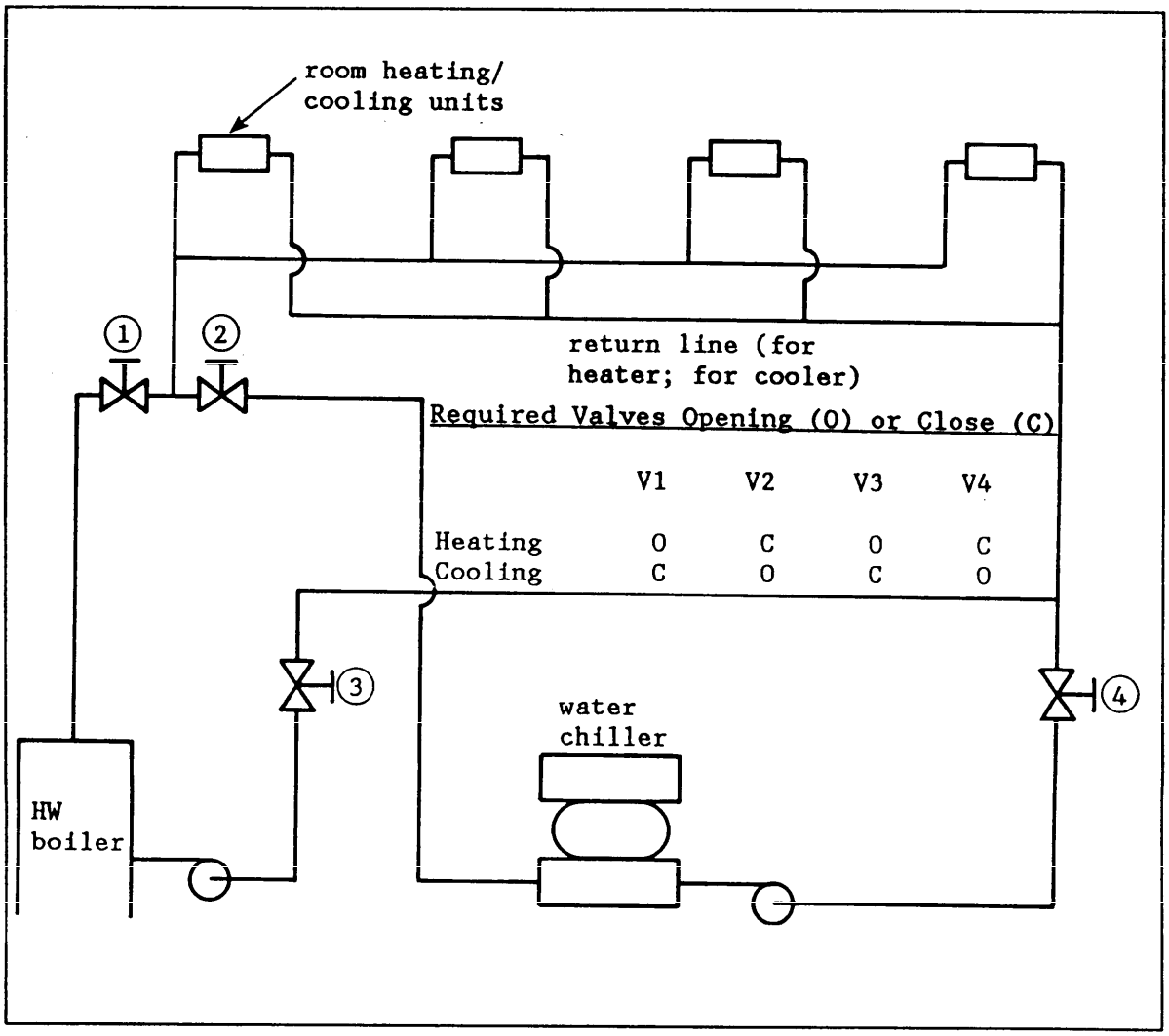

Figure 84
Two-Pipe Reverse Return System Used to Provide Heating or Cooling
(But Not Both Simultaneously)

Two methods are used to control the airflow across a heating coil. The unit heater shown in Figure 85 has hot water which "runs wild" (does not have a control valve). Control is accomplished by the room thermostat which cycles the fan motor. The thermostat, when satisfied, will simply turn off the fan. The water flow through the coil will exit at virtually the same temperature at which it entered.

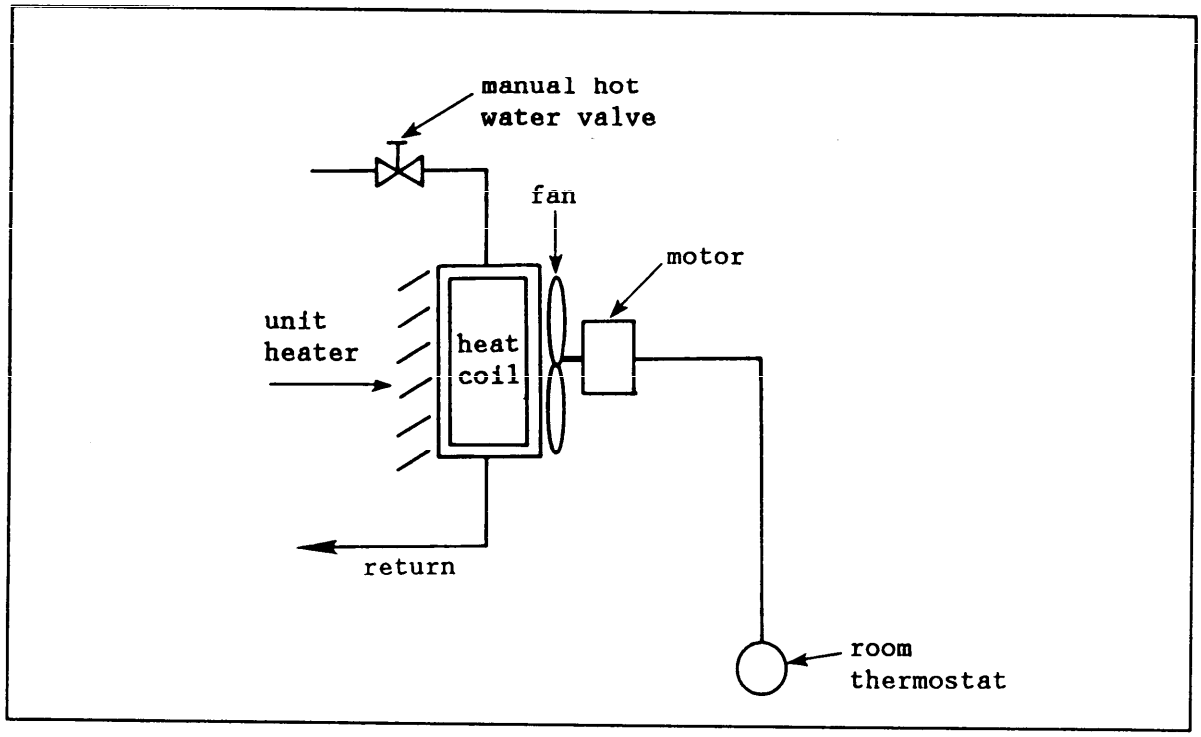

Figure 85
Unit Heater

A second method of adjusting air flow through a wild coil is called face and bypass control (Figure 86). Figure 86 shows the effects as the room temperature rises which causes the face dampers closed and the bypass dampers open. When heat is not required, the air is allowed to bypass around the coil.

Figure 87 shows control of a water coil (chilled water or hot water) by the use of a two-way control valve. The room temperature control system will cause the valve to modulate towards the closed position as the demand for heating (or cooling) becomes reduced.

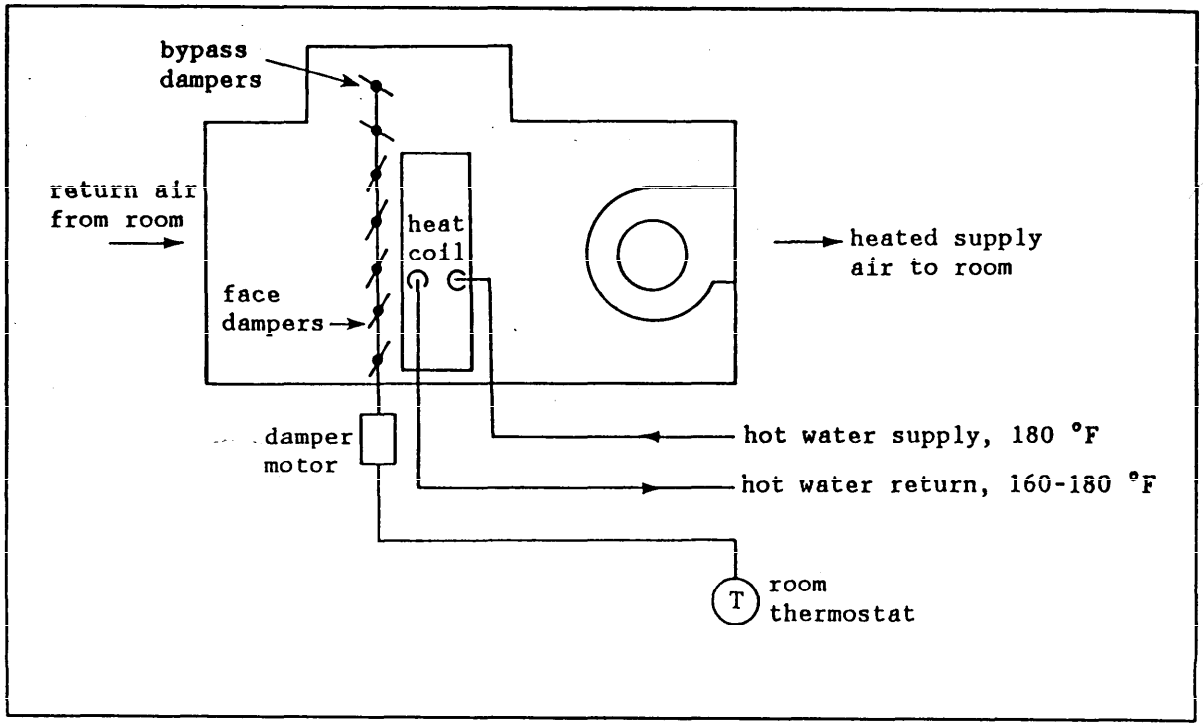

Figure 86
Face and Bypass Dampers

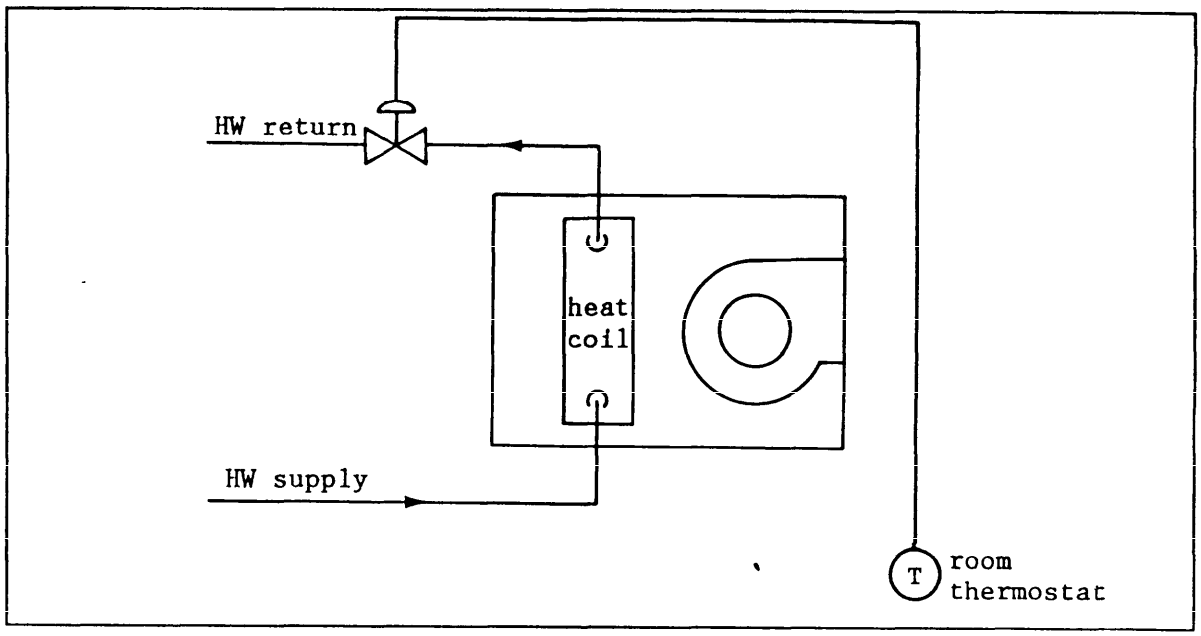

Figure 87
Two-Way Control Valve on Heating Coil

6.4 Steam Piping. The most common type of piping system used in steam systems is the two-pipe system shown in Figure 88. The steam main carries steam to each of the heating units. When the steam gives up its heat to the room air, it condenses and returns to the boiler through the condensate return line. The condensate return line is sized much smaller than the steam main. In order to prevent the steam from just blowing through the coil into the condensate return line, a steam trap is provided at the outlet from each heater. The steam trap is a device which will allow condensate to pass, but it will close if steam tries to pass. The operation of the various types of steam traps will be discussed later in this section.

One-pipe steam systems in which the steam and condensate are both carried in the same pipe are limited to residential applications.

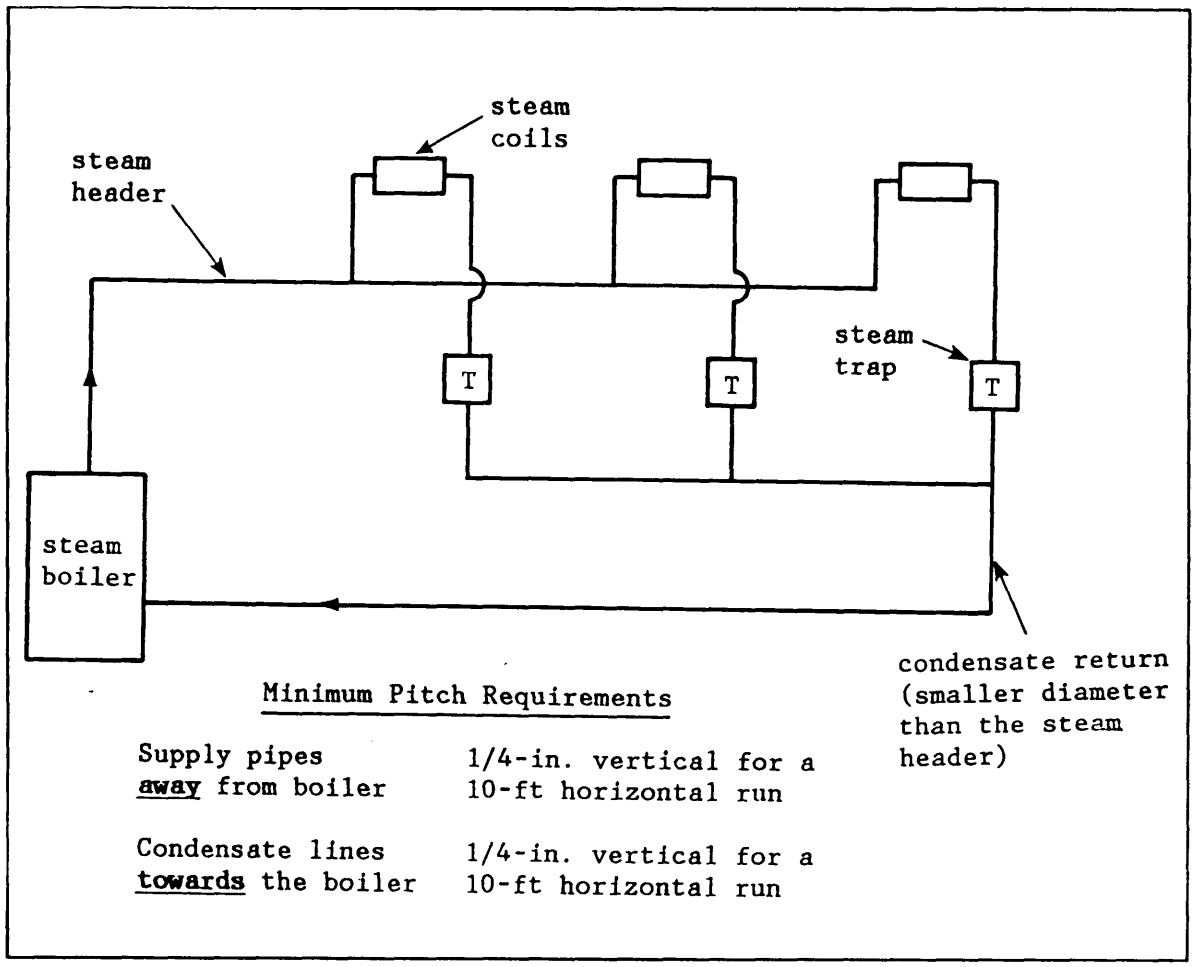

Figure 88
Two-Pipe Steam System

A good installation practice for steam systems is to pitch all supply pipes away from the boiler, and all condensate lines towards the boiler. Pitch of 1/4 inch for each 10 feet of horizontal run is sufficient.

6.5 Condensate Systems. The handling of condensate is probably the most important single factor in assuring the reliable operation of a steam system. Improper condensate piping can be the cause of:

a) Water hammer
b) Tube erosion
c) Thermal shock
d) Failure of control valves
e) Freeze up

Figure 89 shows how the condensate can build up in a steam main. As the steam loses heat to the air surrounding the pipe, condensate is formed. As the amount of condensate builds, waves begin to form. If sufficient condensate is allowed to collect, it will form a water seal across the pipe. At that point, the condensate will be propelled through the pipe at the velocity of the steam, which could easily be 10,000 to 20,000 fpm (over 200 mph)! You can imagine the energy which is carried by a slug of condensate travelling through a pipe at this velocity. When the piping makes a turn, the condensate is just as likely to keep going straight (taking the elbow along with it) as it is to make the turn.

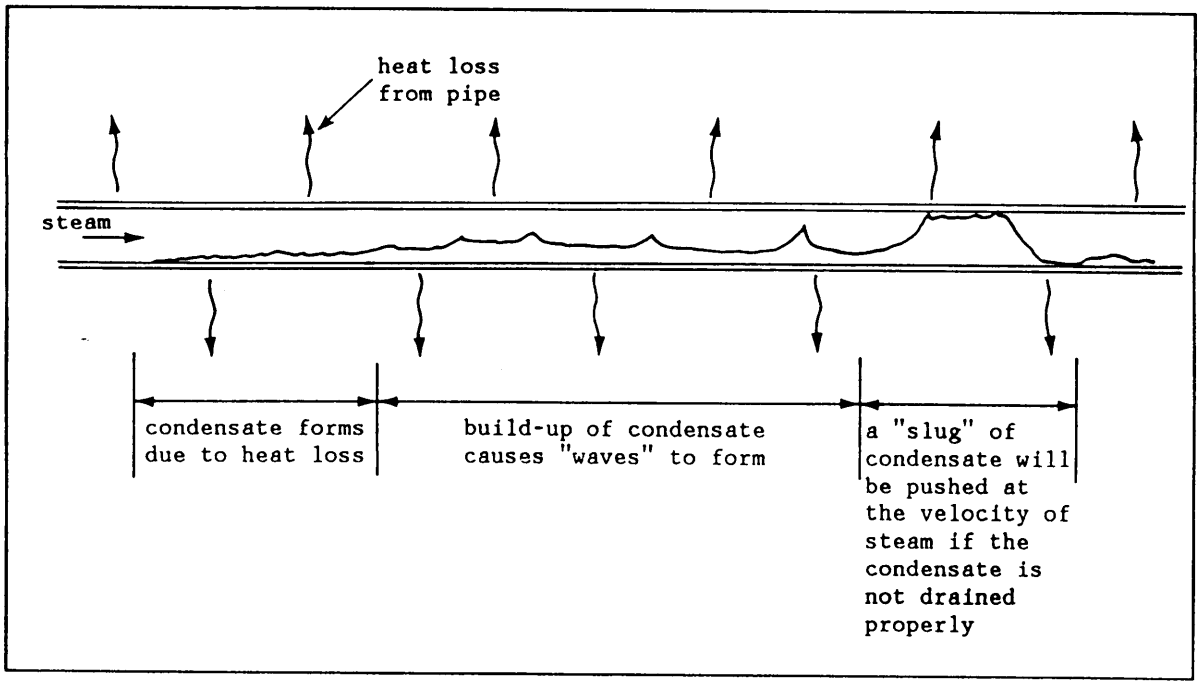

Figure 89
Condensate Building in an Uninsulated Steam Supply Line

If the condensate does not build up sufficiently to cause water hammer, erosion problems can still result from the droplets of condensate travelling at the speed of steam. When the steam is free of all condensate, it is said to be "dry" steam. If "wet" steam is supplied to a heating coil, the tubes of the heating coil will erode. If wet steam passes through a control valve, the plug and seat of the valve will wear.

When condensate is not drained freely from a heating coil, the condensate may remain in the coil during the off cycle. When steam is then reintroduced into the coil, it can cause the condensate to boil, thus causing a rapid thermal change. This rapid expansion can cause the joints of the heating coil to fail and begin to leak. Whenever failures of this type are found, it is wise to examine the condensate system for free drainage to ensure that a replacement component will not also fail for the same reason as the original.

Where heating coils are called upon to heat outside air which is at temperatures below freezing, a special problem is presented. If the condensate is not removed quickly enough, it may be cooled by the outside air sufficiently to cause it to freeze. When the water freezes, it expands, and will cause the tubing to rupture. In the section which follows, the required piping schemes to avoid all these failures will be described.

6.6 Condensate Piping. In order to prevent water hammer or supplying wet steam to valves or coils, the condensate must be removed from the steam main. This is easily done by providing an end-of-the-main drip leg (Figure 90). The condensate which forms in the steam main is carried along the bottom of the pipe, and allowed to drain out through a steam trap to the condensate system. As a further precaution against supplying condensate to the coil, the branch lines will take off from the top of the supply main. Drip legs may also be used at other places in the steam system. Just ahead of control valves and heating coils is a good location for a drip leg. Where a steam line must jog to avoid an obstruction (Figure 91), a drip leg should be provided to prevent the accumulation of condensate.

Condensate piping should be schedule 80 black iron or copper pipe. Do not use galvanized pipe as the galvanized pipe corrodes excessively fast.

Once the dry steam is admitted to the heating coil, it will condense and must be quickly removed from the coil. If the coil is running wild (no control valve), there will be sufficient pressure to push the condensate out of the coil. There can also be sufficient pressure to lift the condensate as shown in Figure 92. The condensate should not be lifted more than 5 feet with a single step condensate lift as shown. Also, the amount of steam pressure available to push the condensate uphill must exceed 1 psi for each 2.3 feet of lift required.

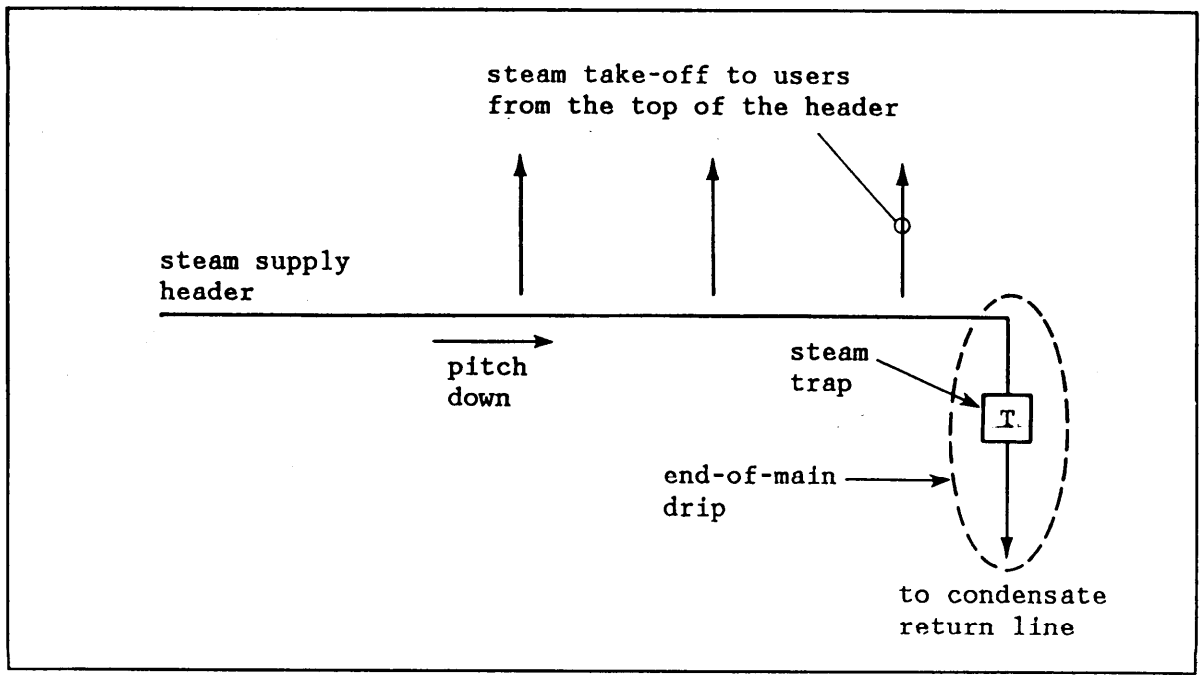

Figure 90
End-of-Main Drip Leg Prevents Accumulation of Condensate in the Steam Header

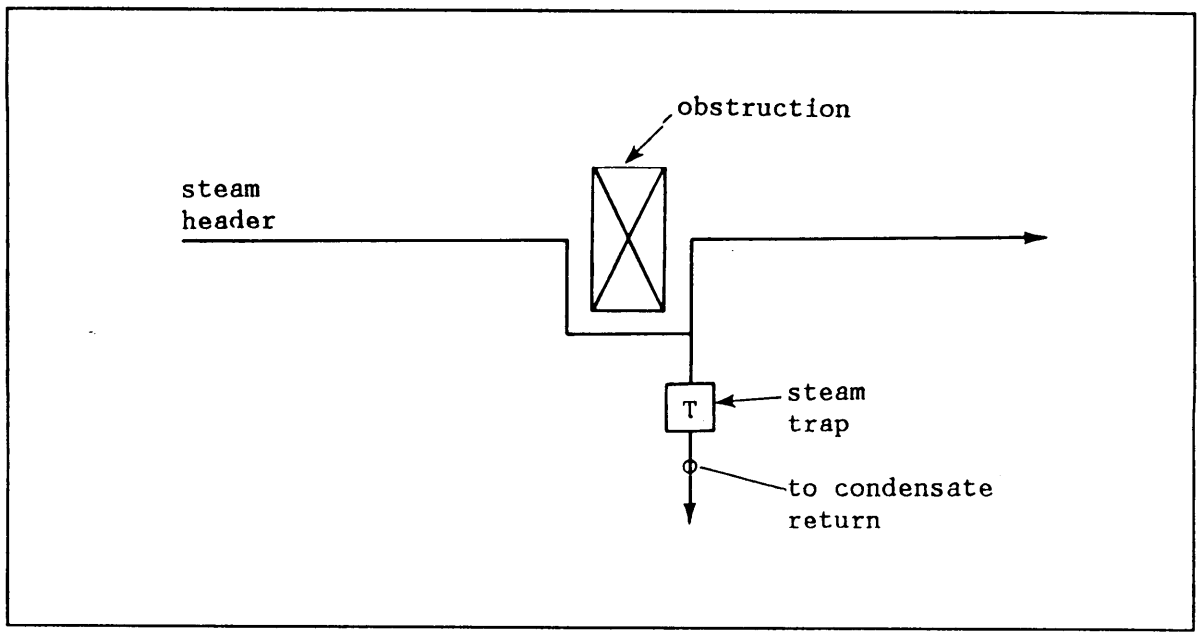

Figure 91
Correct Method of Preventing Condensate Accumulation
When Dropping the Steam Main Below an Obstruction

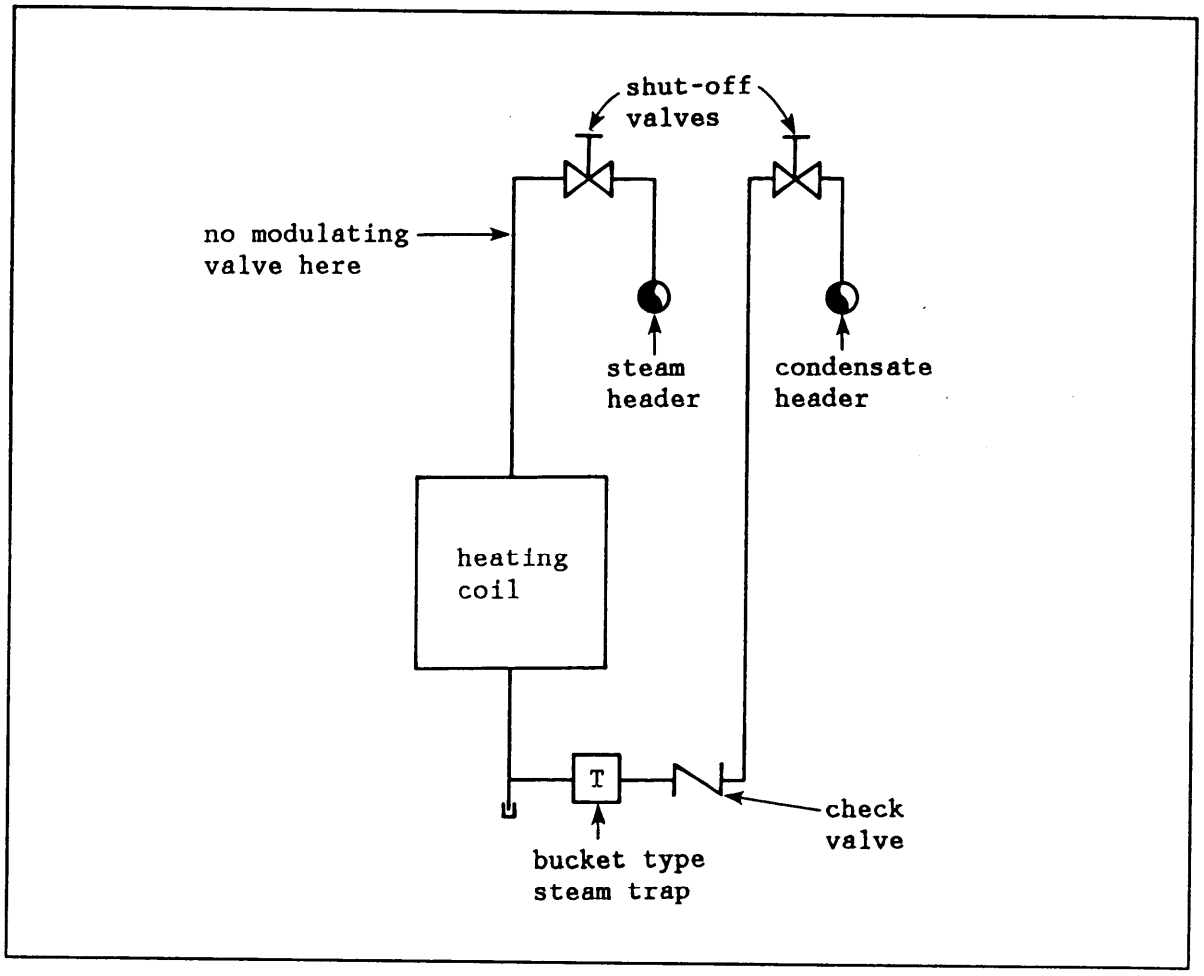

Figure 92
Lifting Condensate to an Overhead Return Header

For steam coils which are controlled by a modulating valve, some additional problems must be solved. When the valve throttles to a partially closed position, the pressure of the coil can easily go into a vacuum. This is caused by the condensing of the steam, and the corresponding tremendous reduction in volume occupied. If this vacuum is allowed to form, it will hold up the condensate in the coil, just as if it were soda pop being held up by the vacuum you form in a straw. Figure 93 shows a vacuum breaker installed in the coil which will admit air into the system to prevent its pressure from falling significantly below atmospheric pressure. Obviously, the condensate from a modulating system may not be lifted, as there may be insufficient pressure available at partial load. The condensate must be allowed to drain vertically downward from this type of installation. In addition, the vertical distance between the coil outlet and the steam trap must be large enough to provide sufficient pressure to overcome the pressure drop in the steam trap. Usually, one to two feet is sufficient.

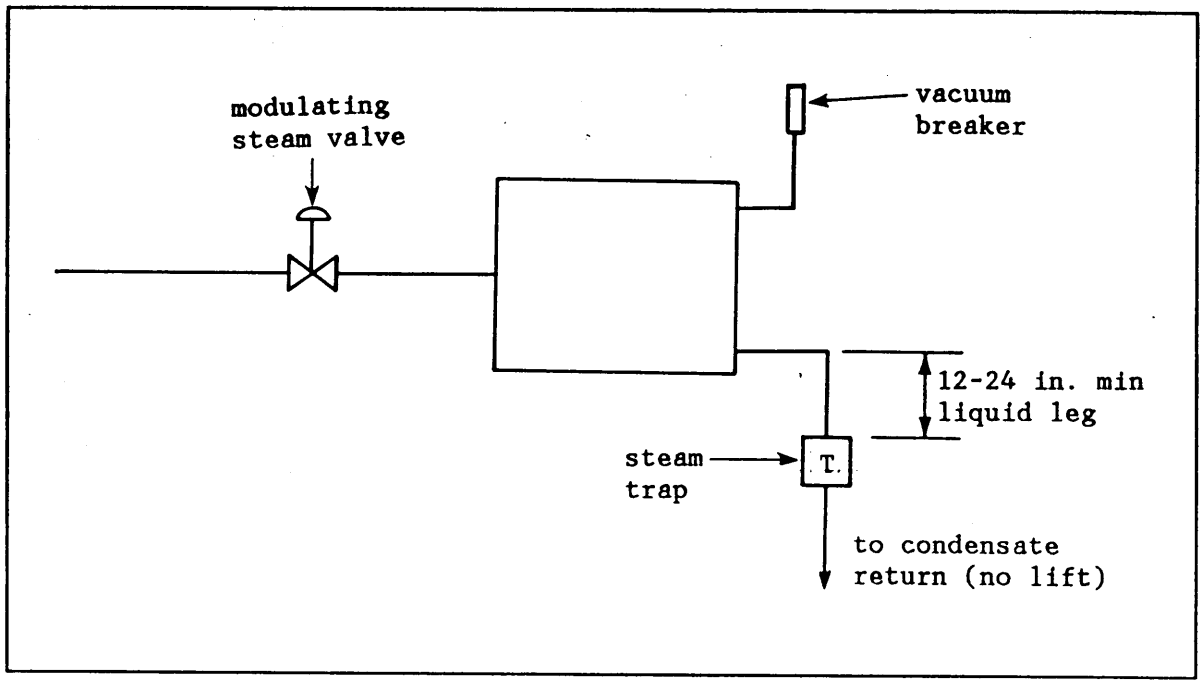

Figure 93
Modulated Steam Coil With Vacuum Breaker and 12- to 24-Inch Minimum Liquid Leg

Preventing freeze-up of steam coils is an especially tricky problem to solve. There are two guidelines which, if followed, will provide a reliable system:

a) Do not modulate the steam supply to outside air coils subjected to freezing temperatures. On/off control only is permitted.
b) Use non-freeze or steam distributing coils.

By using on/off control only, the coil will always have the full steam pressure available to help remove the condensate quickly.

Steam distributing coils (Figure 94) provide a tube within a tube design. A single tube coil may allow all the steam to be condensed within the first portion of the coil, allowing the condensate to freeze in the latter portion of the coil. The steam distributing coil evenly distributes the steam along the entire length of the tube, assuring that all sections will be sufficiently heated to avoid freeze-up.

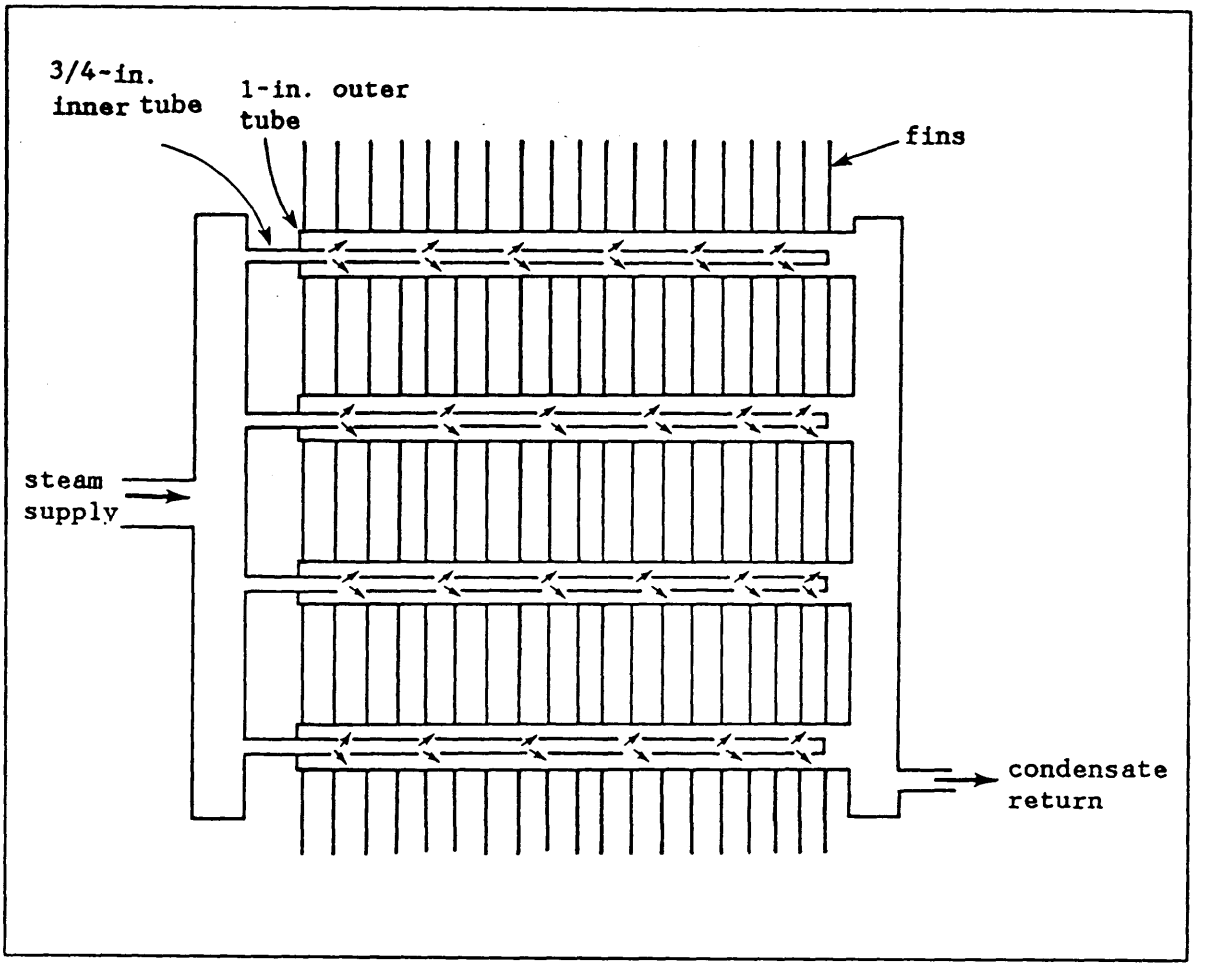

Figure 94
Steam Distributing (Non-Freeze) Type Coil

nondistilled water since bacteria may produce gassing.

6.7 Condensate Pumps. In large commercial or industrial installations, the heating coils are scattered over a large area. It is impractical to drain the condensate from all the steam users by gravity alone. Condensate pumping units such as the one shown in Figure 95 may be located as condensate collection points throughout the installation. Condensate is allowed to drain from several heaters into the condensate tank. A float switch senses the level in the tank. When the level approaches the top, the switch turns on the condensate return pump, and allows it to run until the tank is nearly emptied.

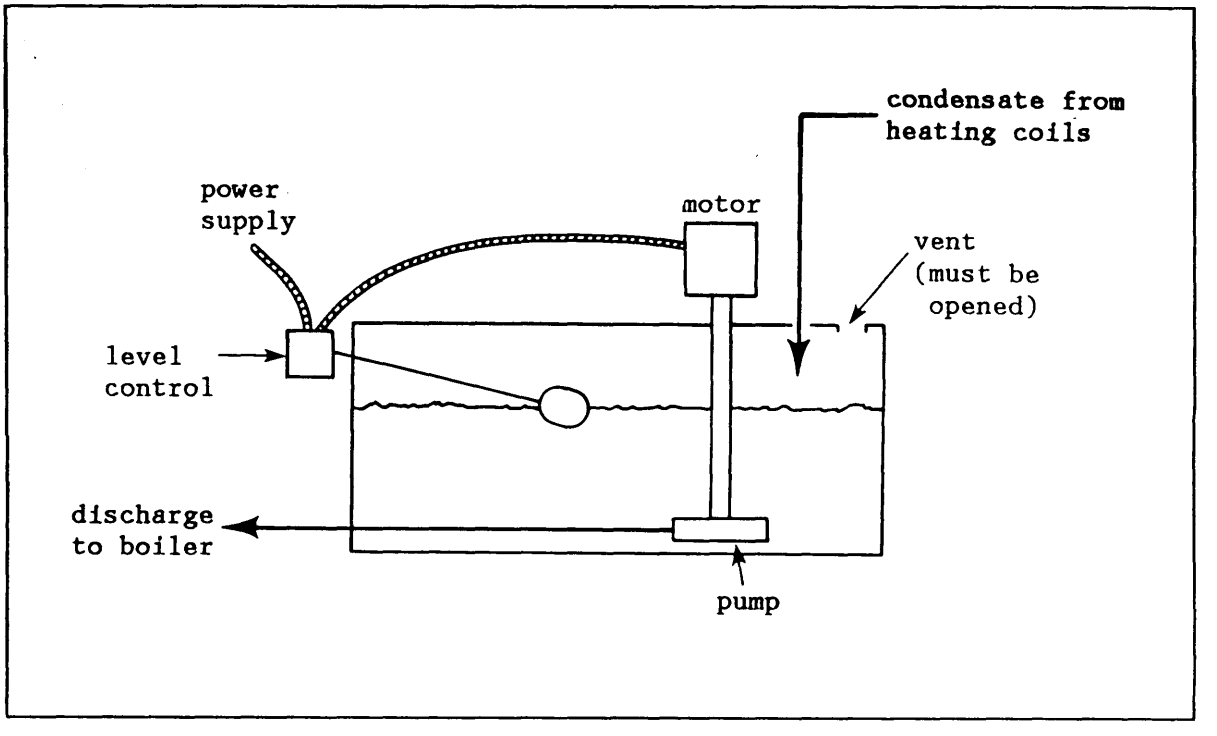

Figure 95
Condensate Return Pump

The condensate collection tanks are typically not constructed to be able to withstand any significant pressure. They are provided with large pipe connections for vent lines. When hot condense returns to the tank (especially on higher pressure systems), some of the condensate will flash until the temperature drops to below 212 degrees F. Do not, under any circumstances, try to plug the vent line on the condensate tank in order to save steam. Dangerous pressures built-up could result in structural failure of the tank.

6.8 Pipe Expansion. When the temperature of a piping system increases, the pipe grows in length. This can occur upon startup of a steam or hot water system, or upon shutdown of a chilled water system. If two ends of a long run of straight piping are anchored in place, something will fail when the piping expands. Steel piping will grow in length by 3/4 inch per 100 feet for each 100 degrees F increase in temperature. Copper tubing will expand by 1-1/8

inch per 100 feet for each 100 degrees F temperature increase. In order to allow for this expansion, an expansion loop such as the one in Figure 96 is used. The pipe expansion is allowed to occur by the bending of the two legs of the expansion loop. For short runs of piping, pipe expansion may be accommodated by the use of expansion joints. These expansion joints require packing and lubrication, so they must be accessible for regular maintenance.

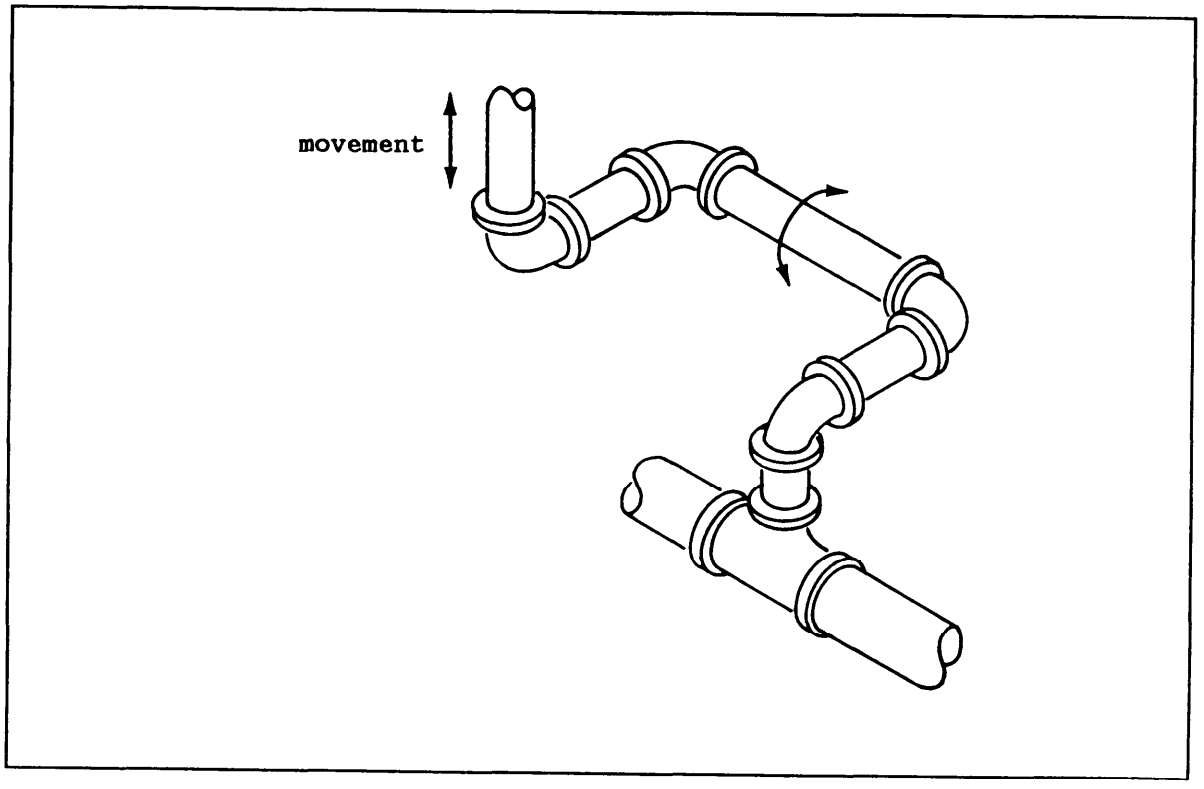

Figure 96
Piping Detail to Allow for Pipe Expansion

Section 6: SELF-STUDY QUESTIONS

Q6-1 To provide the same heat capacity, the heaters at the end of the line of a "One-pipe Hot Water System" must be physically larger than the heaters at the beginning of the line.

(a) True (b) False

Q6-2 Balancing valves should be installed in each of the heater branch lines of a "Two-Pipe Water System" with direct return system.

(a) True (b) False

Q6-3 The "Two-Pipe Water System" with reverse system tends to be more self-balancing since piping lengths to each meter are closer to being equal.

(a) True (b) False

Q6-4 There are two basic methods to control a Hot Water System: a) control the air flow across the water coil; b) control the water flow through the coil.

(a) True (b) False

Q6-5 A good installation practice for steam systems is to pitch all supply pipes toward the boiler, and all condensate lines away from the boiler.

(a) True (b) False

Q6-6 Condensate piping should preferably be schedule 80 iron or copper pipe.

(a) True (b) False

Q6-7 Steel piping will grow in length by more than 1 inch per 100 feet for each 100 degrees F increase in temperature.

(a) True (b) False

Section 7: STEAM TRAPS

7.1 Steam Trap. A steam trap is a compact, relatively low cost, automatic device for releasing condensate and noncondensable gases, and preventing the escape of live steam from a distribution system. It is an important element in efficient utility operations and in energy conservation. A steam trap is normally installed at the outlet of each steam user. Considering the cost of energy, and the role of steam traps in its utilization or waste, your continued attention is warranted.

Normally, the public works utilities organization will inspect and maintain exterior steam distribution traps and, probably, those in central boiler plants, while the maintenance organization will inspect and maintain steam traps installed with equipment in buildings. With consideration to this dual responsibility, the program described in this handbook can be effectively implemented and centralized.

7.2 Steam Trap Classification. The trap allows air to be removed and eliminates condensate as soon as possible for greatest effectiveness of the line and heat transfer surface. There are three major classifications of steam traps whose functions are sometimes mixed to provide combination type steam traps.

a) Mechanical - operates using the difference in density between condensate and steam.
b) Thermostatic - uses temperature differences to discharge condensate and air.
c) Thermodynamic - operates using kinetic energy differences between flowing steam and condensate.

7.3 Steam Trap Types. There exists within each classification basic variations. These are:

a) Mechanical
   (1) inverted bucket trap
   (2) float trap
b) Thermostatic
   (1) bimetallic trap
   (2) thermal expansion (i.e., wax, plastic, or liquid)
   (3) bellows trap (usually filled with water or water-alcohol mixture)
   (4) float and thermostatic (F&T) trap (this is the only combination function trap which has universal recognition as a "type" of trap)
c) Thermodynamic
   (1) orifice plate trap (the orifice plate may not be regarded by some as a true thermodynamic trap)
   (2) piston impulse trap
   (3) disk trap

7.3.1 Mechanical Traps. Mechanical traps work because steam sits above the more dense condensate, which collects at the bottom of any container holding both fluids. As more condensate collects, it raises the liquid condensate level. A mechanism which reacts to the rising level will allow the condensate to be discharged. As the condensate is discharged, the liquid level drops and the discharge path closes. The simplest mechanism that will move with a rising level of condensate is a closed float. The float can be attached to a lever which controls the opening and closing of a valve. Condensate is discharged due to the higher pressure upstream than downstream of the valve. However, if there is greater pressure downstream than up, condensate will build up, flooding the heat transfer surfaces. That area of the heat exchanger is then not available for heat transfer.

7.3.1.1 Inverted Bucket Trap (Figure 97, external). An inverted bucket trap can be thought of as an opened soup can turned upside down floating on the surface of a pool of water. When the contents of the bucket are mostly air, the bucket floats. When there is little air and mostly condensate captured within the bucket, the bucket sinks and allows a valve to discharge the condensate. When filled with steam, the bucket floats and keeps the valve shut. There is condensate all around the bucket bottom, sides, and top. If there is no condensate in the body of the trap to seal the bottom of the bucket, steam can flow around the dropped bucket and through the open valve at the top (see Figure 97, operational cutaway). Inverted bucket traps can be primed at start-up by the condensate in the system. To ensure priming, keep the discharge valve closed until the bucket floats, unless that is done automatically. Liquid entry to the inverted bucket is at the bottom of the bucket no matter whether the inlet and outlet are in line, on the sides, or on the bottom and top. Inverted bucket steam traps have different sized outlet ports to correspond to the pressure difference across the trap. As the pressure difference increases, the area of the outlet port must be decreased to balance the increased pressure difference. For example; a trap sized for a small pressure drop (large outlet port) installed in a higher pressure application will not open even when full of condensate. Inverted bucket steam traps must have a vent in the top of the bucket to allow air to leak out of the bucket into the condensate above and around the bucket. On the next sinking of the bucket, the air is discharged along with some condensate. If the air could not leak out from the bucket, the bucket would fill with air. Since air is much lighter than condensate, the bucket would float. When the bucket floats, the valve is closed and the system "airbinds." The term "air" is the simplest way of talking about the gases in the steam system. This air contains noncondensable gases, such as carbon dioxide, nitrogen, oxygen, etc. Carbon dioxide can form carbonic acid which attacks ferrous materials. This is another reason why steam traps should remove air and condensate as soon as they form. Normal failure may be either open or closed.

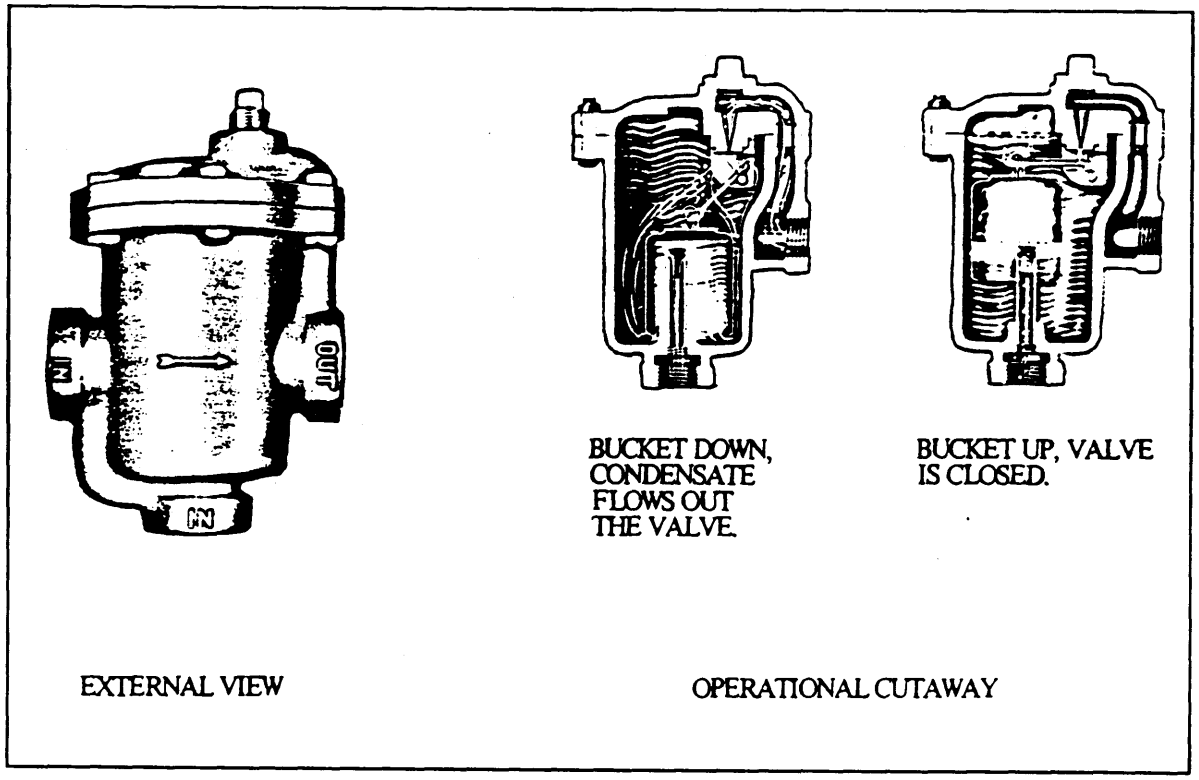

Figure 97
Inverted Bucket Trap

7.3.1.2 Float Trap (Figure 98). Floats are normally sealed balls. As the level of condensate in the trap rises, the float is raised opening a valve. The float itself may cover the valve opening, or it may be attached through a pivoting lever arm to the valve. Maximum operating pressure and condensate flow rate must be known to select the proper size float trap. If the operating conditions are not known, the difference in pressure across the trap and valve size may prevent the float from rising, thus preventing release of condensate from the trap. Float traps normally fail closed.

7.3.2 Thermostatic Traps. The term "thermostatic" means heat in balance. Since steam contains more heat energy than condensate, its heat can be used to control steam trap operation. See Figure 99 for the operation of a thermostatic steam trap. Thermostatic traps are excellent for removal of air or noncondensable gases especially during start-up. One type of thermostatic trap uses two types of metals, thus it is called a bimetallic trap (see Figure 100). Another type uses a bellows filled with a liquid (usually water or a water-alcohol mixture). It is called a bellows trap (see Figure 101). Some type of thermal expansion element such as wax, a plastic, or a liquid is used in another type of steam trap (called the thermal expansion steam trap).

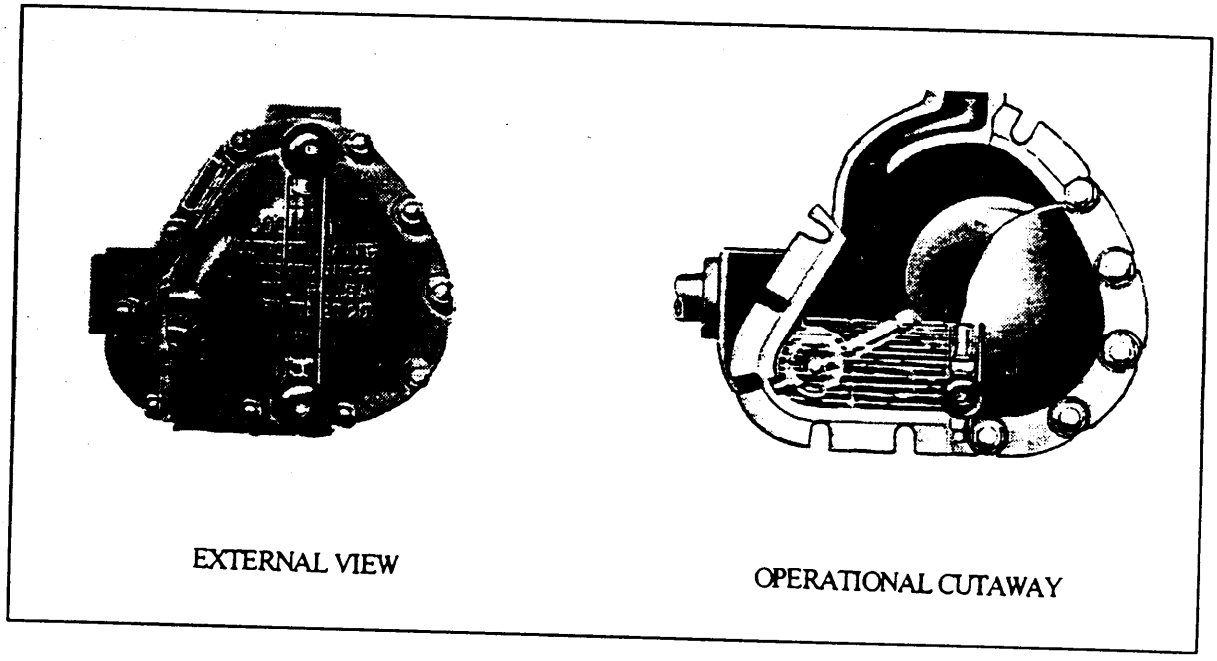

Figure 98
Float Trap

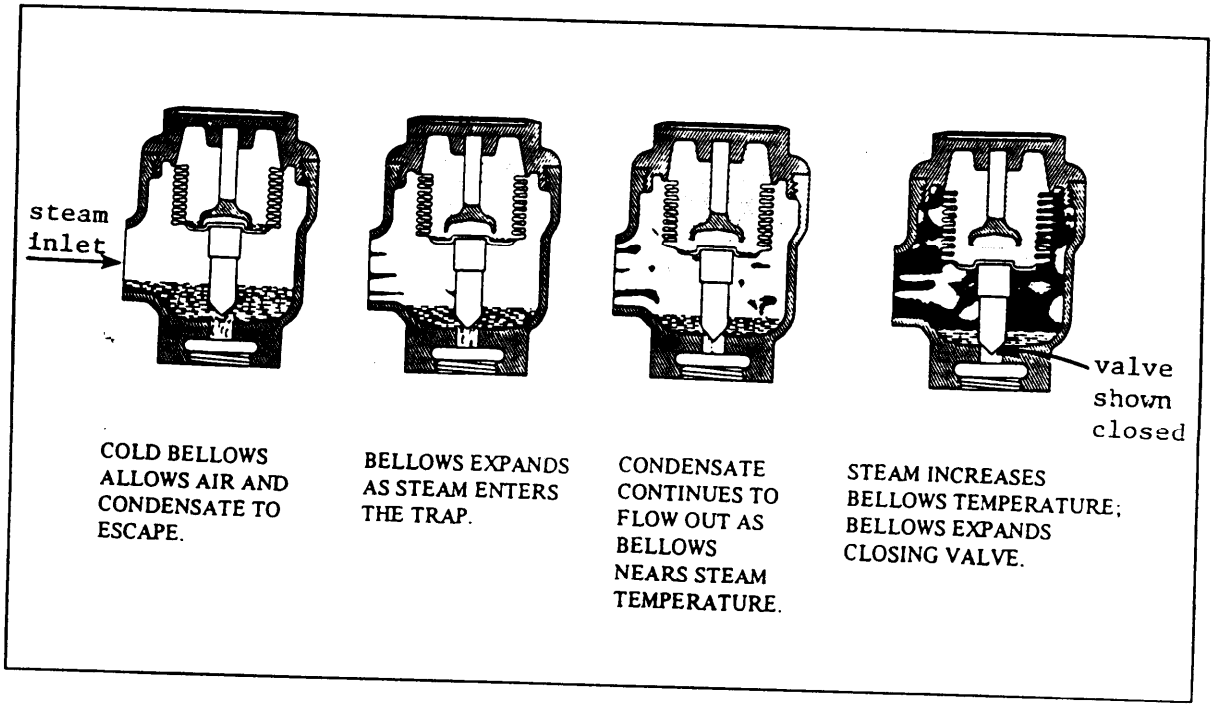

Figure 99
Thermostatic Trap Operation

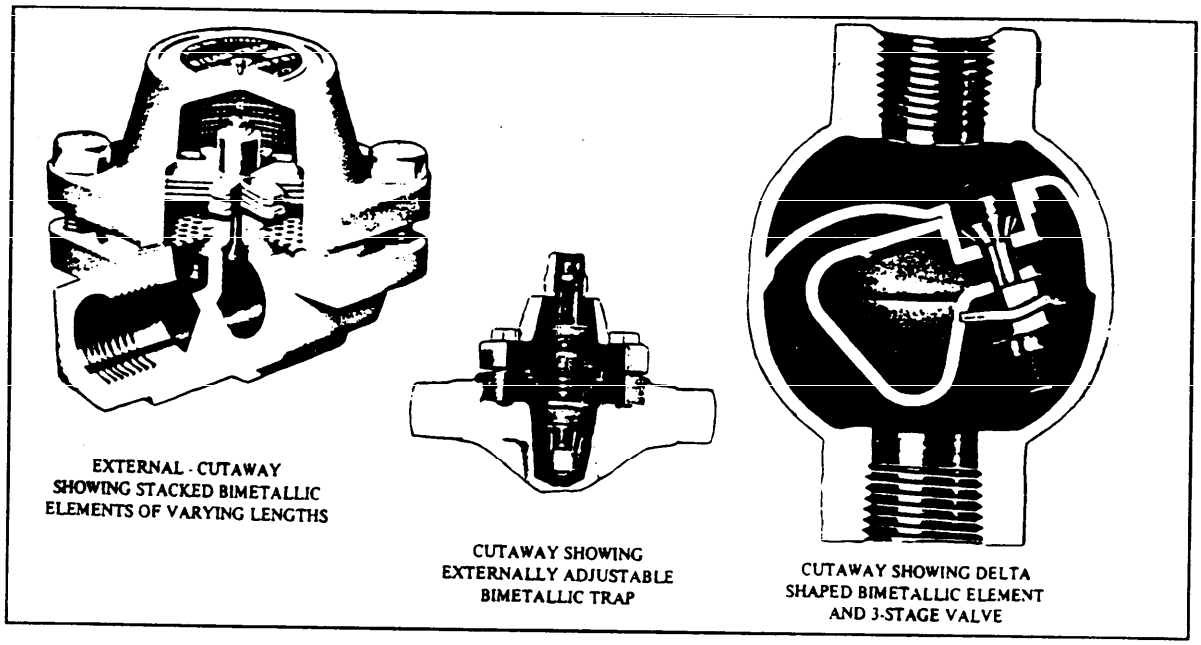

Figure 100
Bimetallic Trap

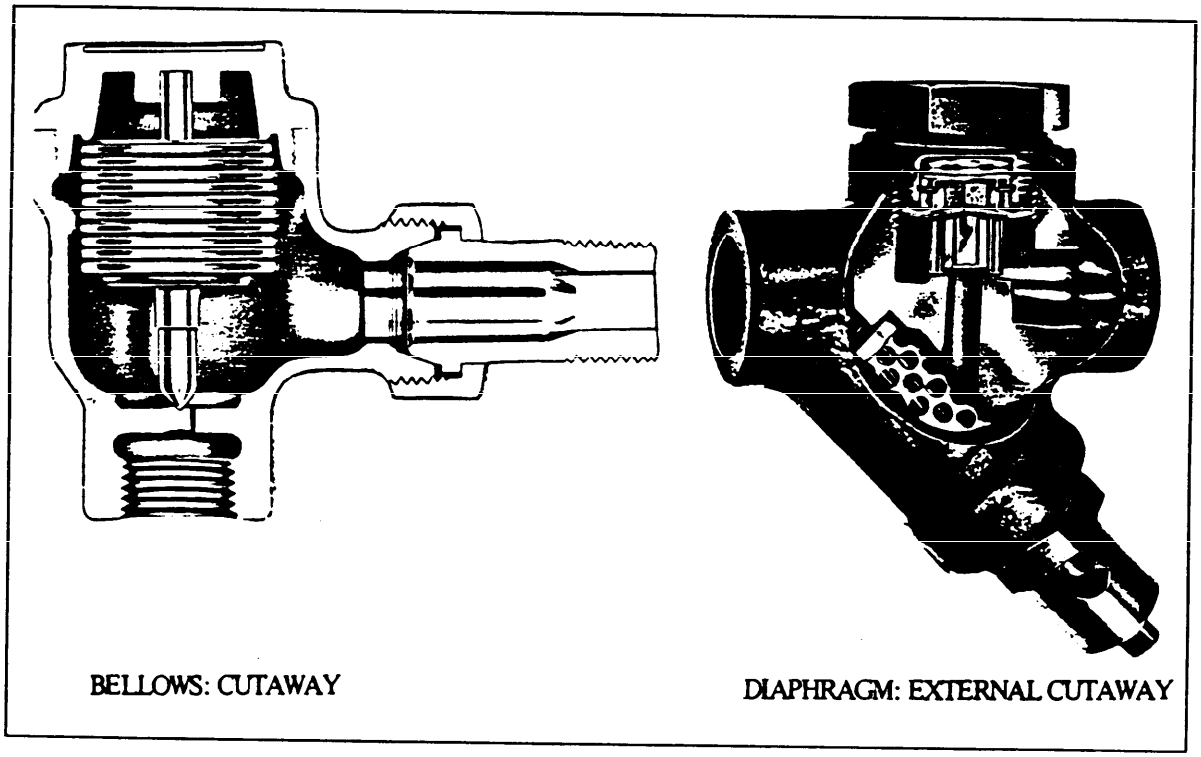

Figure 101
Bellows and Diaphragm Traps

7.3.2.1 Bimetallic Trap (Figure 100). The operation of a bimetallic steam trap is based on a bimetallic element which changes shape with changes in temperature. Bimetallic element movement controls a valve which releases air and condensate. The basic bimetallic trap is only sensitive to changes in temperature and needs to be adjusted to the pressure range (on the saturated steam temperature-pressure curve) in which it will be operating. To prevent the loss of live steam, or a buildup of condensate, manufacturers use several different valve and bimetallic element shapes and sizes. These designs allow the bimetallic steam trap to respond better to changes in its operating conditions. Bimetallic steam traps normally fail closed.

7.3.2.2 Liquid Filled Bellows or Diaphragm Trap (Figure 101). The more common design for low pressure heating systems is the bellows or diaphragm trap. The bellows element has many corrugations and may be filled with a liquid, such as alcohol, water, or a mixture of both. When heated by steam around the bellows, the liquid inside the bellows begins to vaporize. This forces the bellows to expand until the pressure inside is equal to the pressure outside the bellows (balanced pressure). Bellows can be used at varying pressures because when there is steam in the trap body outside the bellows, there is steam within the bellows. When there is condensate in the body, depending upon its pressure and temperature, there may be condensate or steam within the bellows. Bellows action is a combination of temperature and pressure since lower pressures allow water to boil at lower temperature. Diaphragm capsules are similar in action to bellows.

If a bellows trap is taken apart while hot, the bellows may continue to expand and destroy itself. If a bellows trap is exposed to superheated water, the fill will completely vaporize, achieving much greater pressure inside the bellows than it is designed for causing the bellows element to distort or rupture. If bellows are subjected to water hammer, their corrugations flatten from a semicircle to a sharp crease which will cause failure. When a bellows breaks, it loses its vacuum and expands. This pushes the valve into the seat stopping any condensate flow. Bellows steam traps normally fail closed.

7.3.2.3 Float and Thermostatic Trap (Figure 102). The most widely used float and thermostatic (F&T) traps have a ball float attached to a lever which pivots. The pivoting action causes the valve on the inlet side to open and close. All float and thermostatic traps must be installed so that the float drops when there is no condensate and rises when condensate collects. The most common feature of a float and thermostatic trap is that it is bulky. The size allows space for the float to rise and fall, usually pivoting. The two parts shown on the outside are the body and cover. Both are usually made of steel or cast iron bolted together with at least four bolts. A gasket seals the mating surfaces. The thermostatic element is usually a bellows or diaphragm but can be a bimetallic arrangement. The thermostatic element must be high in the trap to respond to steam which is lighter than water. The thermostatic portion of the trap is usually not affected by condensate but stays closed when steam, and open when air, is present. See Figure 103 for operation. The thermostatic element may have a separate cover for ease of testing, examination, and removal, or it may be accessible only upon opening

the cover of the main body. There are a few manufacturers who build floats which are free-floating (no mechanism to operate a valve in and out of a seat). One trap design has two hemispherical half shells made of different thickness of stainless steel so that no matter how the condensate sloshes, the heavier shell will be at the bottom. The outlet of these free-floating balls is at the bottom. When there is condensate in the body, the ball floats allowing the condensate to pass through the seal to the return system. When there is no condensate, the ball settles down on the seat, sealing against

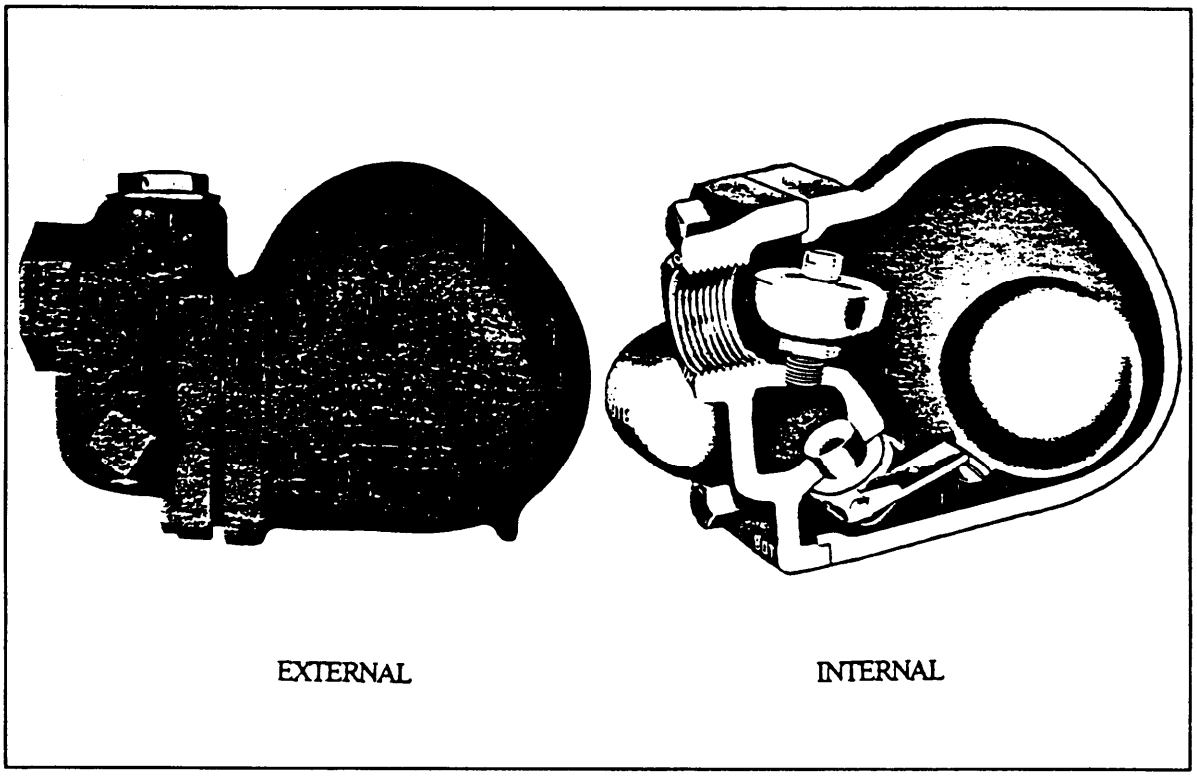

Figure 102
Float and Thermostatic (F&T) Trap

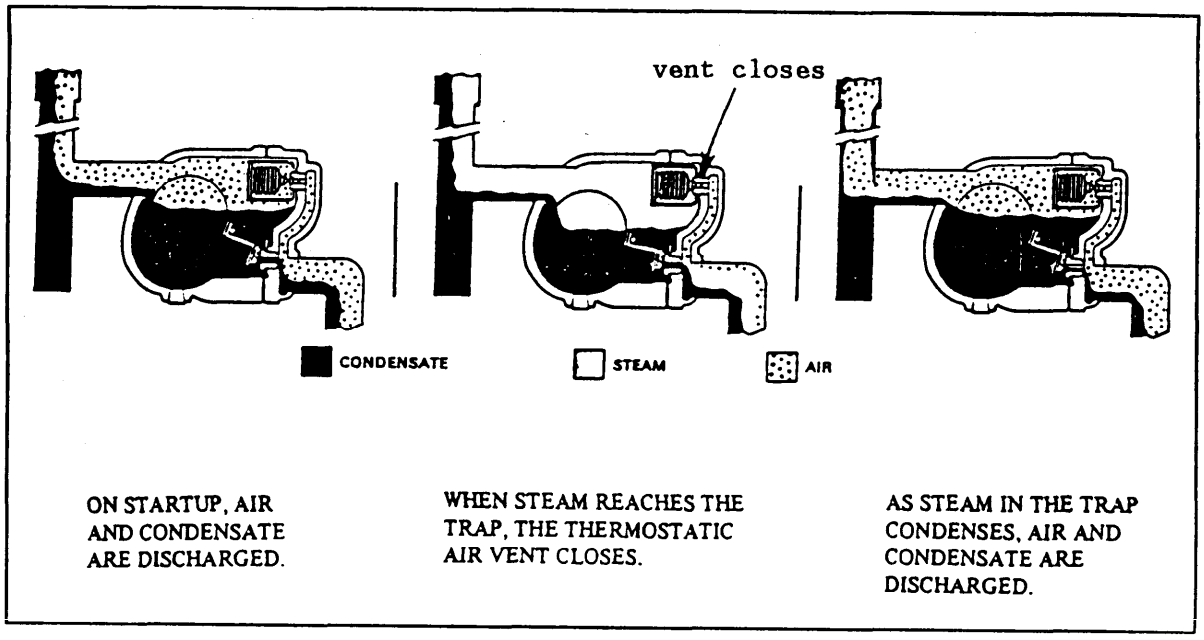

Figure 103
Operation of a Float and Thermostatic Trap

steam leakage. Steam will not float the ball due to its weight. Some free-floating ball traps have a separate thermostatic element at the top to release air and some manufacturers build guided floats which are cylindrical and hollow down to the vertical center. A solid rod then is positioned so that the float always moves around the rod when there is a changing amount of condensate. The seat is sealed by an extension at the bottom of the vertical float which acts as a valve plug. The turning of the ball or cylinder causes a varying position of valve and seat for uniform wear.

The upstream side of the trap can have a lower pressure than the downstream side if the steam valve is modulated closed. Therefore, some manufacturers install vacuum breakers on the top of their float and thermostatic traps to allow atmospheric pressure into the body of the trap. They state that any vapor lock can then be broken, allowing the positive pressure to cause condensate flow through the trap to its discharge. This prevents flooding of the heat exchange equipment. Float and thermostatic steam traps normally fail closed.

7.3.2.4 Thermal Expansion Steam Trap (Figure 104). The thermal expansion type steam trap operates over a specific temperature range without regard to changes in pressure. The thermal element may be a wax, a plastic, or some sort of special liquid. This thermal element is used because it has a high expansion rate when subjected to a small increase in temperature. The thermal element is sealed off from direct contact with the condensate and steam.

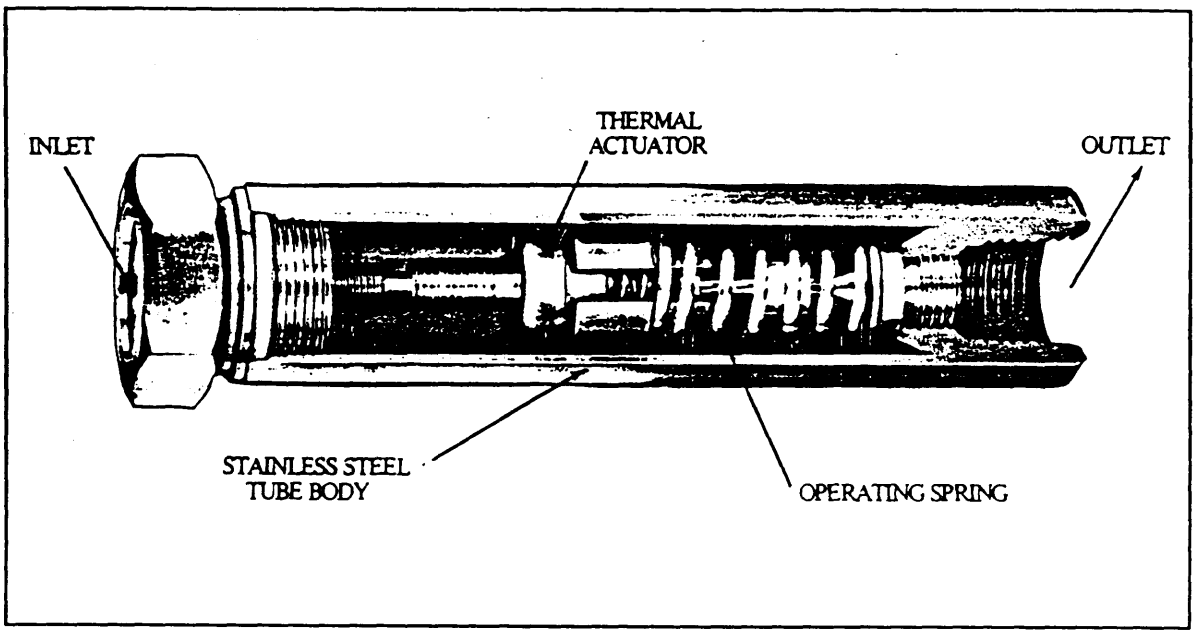

Figure 104
Thermal Expansion Steam Trap

When condensate is flowing through the trap the valve would be fully open. With a slight rise in temperature up to the saturation temperature, the thermal element would dramatically expand, closing the valve and preventing loss of live steam. Almost any operating pressure can be selected over which to open and close the valve by selecting the corresponding saturation temperature at which the thermal element will dramatically expand. Thermal expansion steam traps normally fail open.

7.3.3 Thermodynamic Traps. Thermodynamic steam traps operate using the differences in the flow energy, velocity, and pressure of steam and condensate. The velocity of steam flowing through an orifice will be much greater than that of condensate. Thermodynamic steam trap designs also take into account the difference in the pressure drop between steam and condensate flowing through an orifice or a venturi.

7.3.3.1 Orifice Trap (Figure 105). When a gas or vapor passes through a restriction, it expands to a lower pressure beyond the restriction. Drilling a small hole in a plate (called an orifice plate) or placing a short section of pipe between two sections of pipe (called a venturi) is the equivalent of slightly opening a valve. An orifice trap operates on the principal of continuously removing condensate from the steam line. This continual condensate removal allows the orifice trap to use a smaller diameter outlet than other types of steam traps, which operate an open-close-open-close cycle. Thus, the potential loss of live steam during system start-up, or when the trap has failed open, is less for an orifice trap than for other types of steam traps. Also, the mass flow rate of steam is much less than that of

condensate, cutting down the potential loss of live steam during normal operation. Since they are always open, the mode of failure of an orifice trap would be to clog with debris, or for the opening to corrode to a much larger opening.

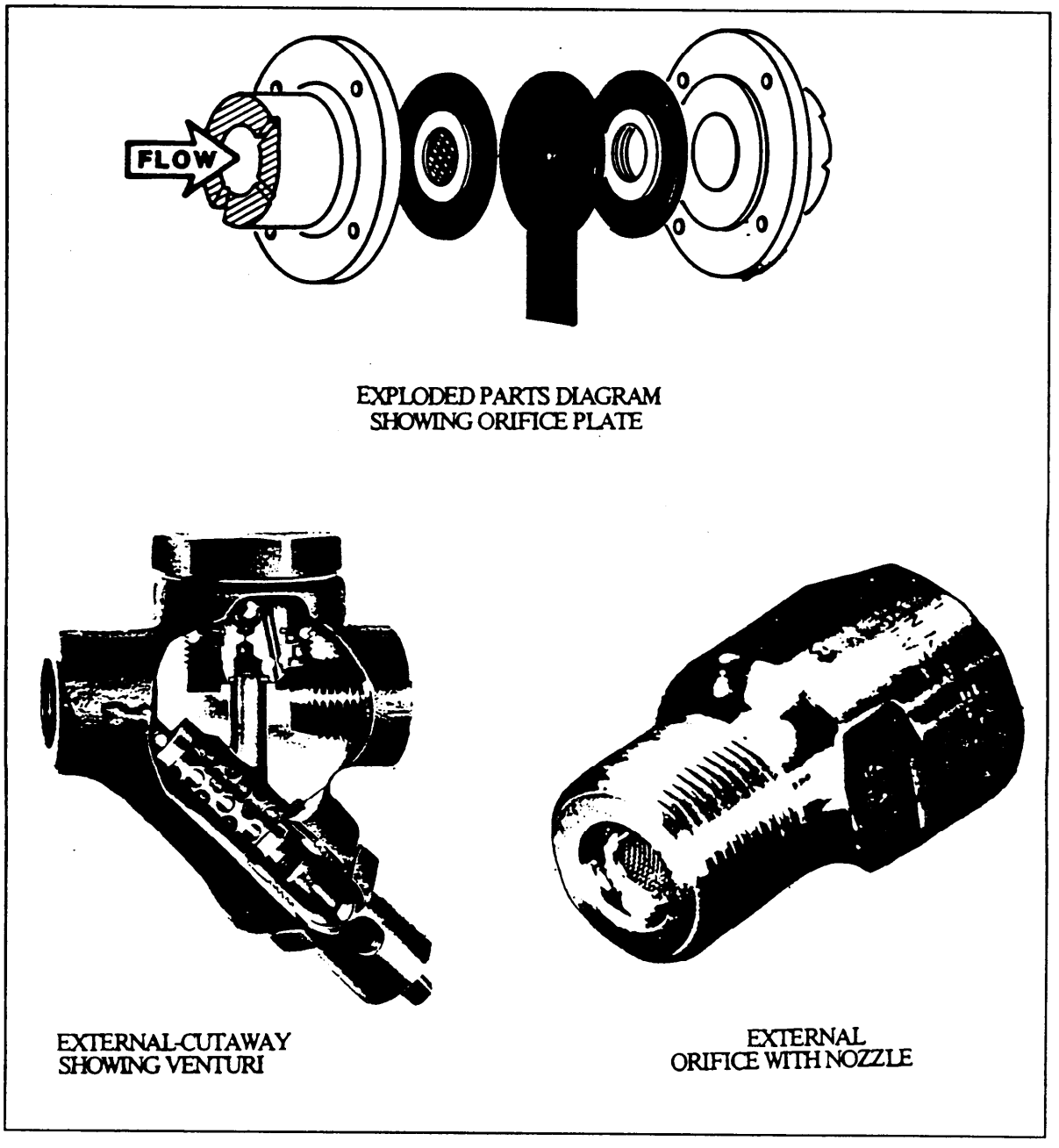

Figure 105
Orifice Traps

7.3.3.2 Piston Impulse Trap (Figure 106). The first thermodynamic operating trap was the piston impulse style. The piston impulse style valve lifts to expose a relatively large seat area for cool condensate. As the condensate heats up and approaches steam temperature, some flows by the piston opening around a disk on the piston valve and flashes into steam. The flash steam at a pressure between inlet and discharge is pushing against a relatively large flange area on top of the disk and tends to push the valve down and closed. Steam in the flash or control chamber tends to prevent any more steam from entering the trap until it condenses. Once closed, the trap will not open until steam in the control chamber cools and condenses, and incoming condensate blocks steam from flowing into the control chamber. When the steam in the control chamber condenses, the pressure above the piston drops, allowing the valve to open. Air or noncondensable gas flows out the center vent hole in the piston. If blocked by dirt, the trap becomes airbound and nonfunctioning. Normal trap failure may be open or closed.

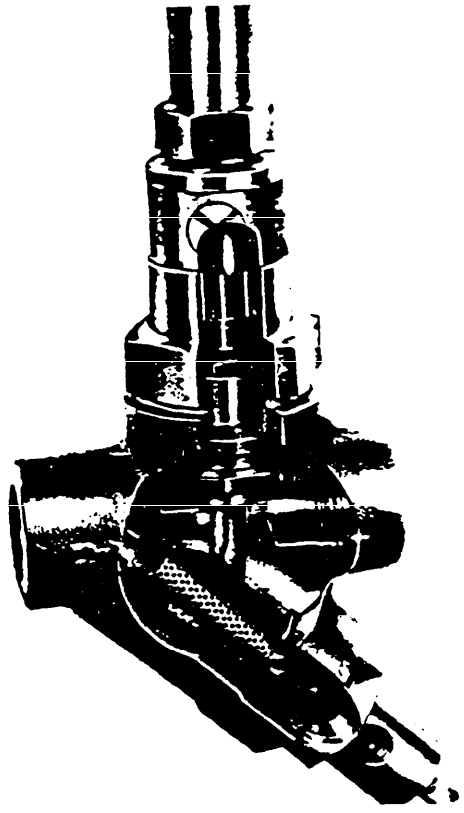

Figure 106
Piston Impulse Trap (External Cutaway)

7.3.3.3 Disk Trap (Figure 107). The disk thermodynamic trap has only one moving part, the disk. Just as with the piston impulse trap, there is a chamber above the disk which can hold steam or flashing condensate. The intermediate pressure over the entire area of the top of the disk (between the inlet and outlet) pushes the disk toward the seat closing the orifice. The opposing force is the pressure of the inlet steam against its inlet orifice.

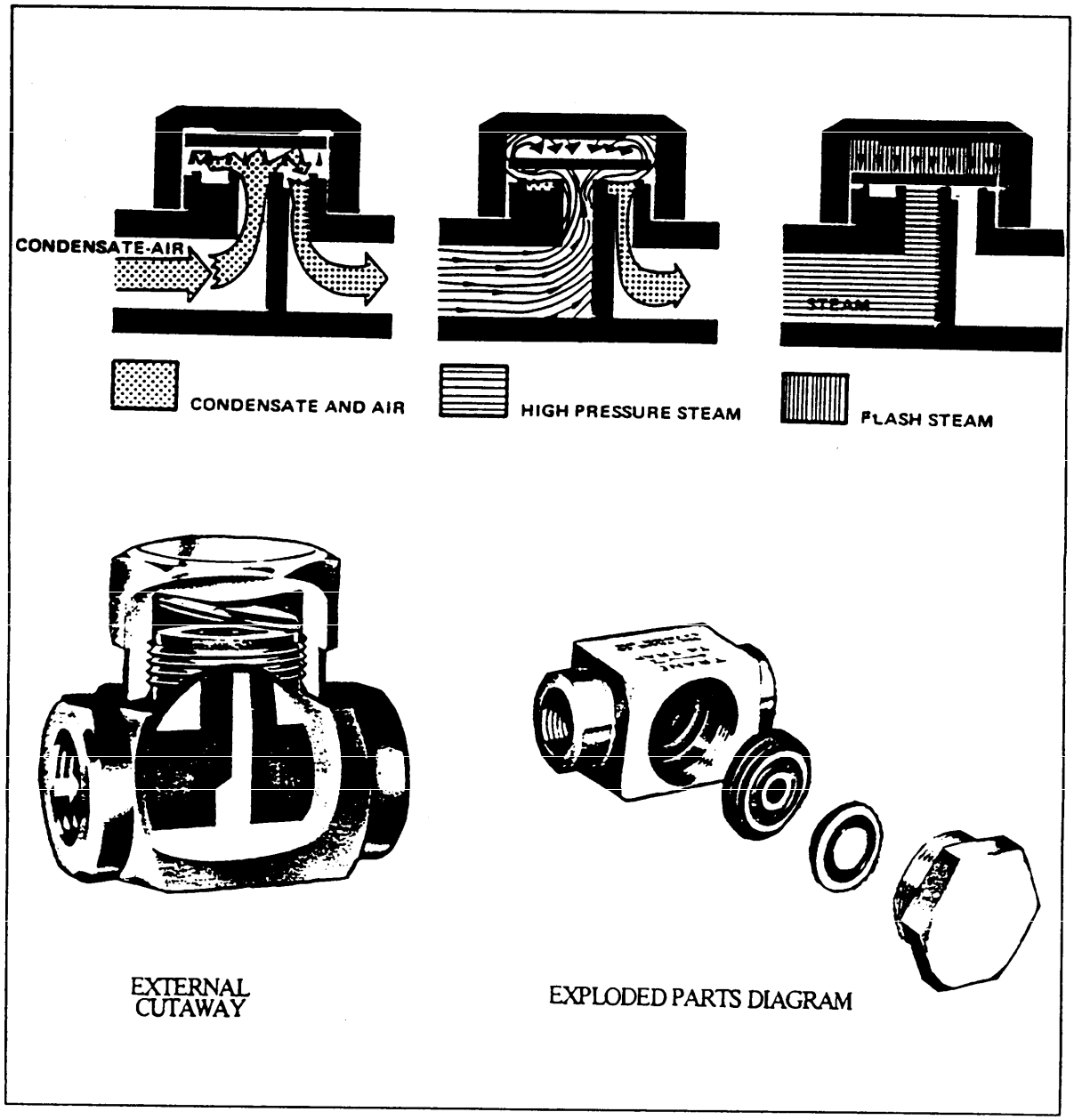

Figure 107
Disk Trap

When there is steam at the trap, the disk snaps shut against its seat. As the steam in the control chamber condenses, and leaks under the seat, there is less force to keep the disk closed and it snaps open. A disk trap's air handling capability depends upon the individual manufacturer's design and machining care. Disk traps are more adversely affected by back pressure because of lower closing forces than other steam trap designs. Disk traps normally fail open.

7.4 Selecting the Type of Trap. The major considerations in selecting the type of steam trap are:

a) Type of service.
   (1) continuous or intermittent removal of condensate,
   (2) temperature of the condensate (related to system pressure),
   (3) range of load on the trap, and
   (4) rate of change of the load.
b) Operational.
   (1) normal steam loss during operation,
   (2) reliability,
   (3) failure mode most likely to occur,
   (4) water hammer potential, and
   (5) danger of freezing.
c) Economic.
   (1) initial cost,
   (2) ease of installation and removal,
   (3) ease of inspection and diagnosis, and
   (4) life expectancy of the trap.

Experience with the particular system and equipment and knowledge of site specific conditions are the most important elements in trap selection. manufacturer's recommendations are also useful, but vary considerably. Table 13 contains a compilation of several guidelines for selection of the proper type of trap. Table 14 provides a summary of key operating characteristics of the types of traps used most frequently. Additional guidance extracted from MIL-HDBK-1003/8A, Exterior Distribution of Utility Steam, High Temperature Water, Chilled Water, Natural Gas, and Compressed Air, and Federal Specification WW-T-696, Traps, Steam and Air, is provided in the following paragraphs.

7.4.1 Design Considerations. MIL-HDBK-1003/8A provides the following guidance applicable to the selection of steam traps:

a) The float trap action is controlled by the condensate level in a float chamber and can be used to lift condensate.

b) The thermostatic trap may be used to automatically vent air and noncondensables from large coils. It may be used with unit heaters, radiators, and convectors where the condensate flow is gravity-controlled from the trap. The results of misuse of this trap are trap chatter or trap failure to remain closed. This type of trap shall not be used as a "lift trap" (i.e., where condensate must be lifted to a higher elevation).

Table 13
Steam Trap Selection Guide

Application	Special Considerations	Primary Choice (a)	Alternate Choice
Steam Mains and Branch Lines	Energy conservation	Inverted bucket	Float and Thermostatic
	Response to slugs of condensate		
	Ability to handle dirt	Thermostatic in locations where freezing may occur	
	Variable load response		
	Ability to vent gases		
	Failure mode (open)		
Steam Separators	Energy conservation	Inverted bucket (large vent)	Float and Thermostatic
	Variable load response		
	Response to slugs of condensate		Thermostatic (above 125 psig)
	Ability to vent gases		
	Ability to handle dirt		
	Failure mode (open)		
Unit Heaters and Air Handling Units	Energy conservation	Inverted bucket (constant pressure)	Float and Thermostatic (constant pressure)
	Resistance to wear		
	Resistance to hydraulic shock		
	Ability to purge system	Float and Thermostatic (variable pressure)	Thermodynamic (variable pressure)
	Ability to handle dirt		

Table 13 (Continued)
Steam Trap Selection Guide

Application	Special Considerations	Primary Choice (a)	Alternate Choice
Finned Radiation and Pipe Coils	Energy conservation Resistance to wear Resistance to hydraulic shock Ability to purge system Ability to handle dirt	Thermostatic (constant pressure) Float and Thermostatic (variable pressure)	Thermostatic
Tracer Lines	Method of operation Energy conservation Resistance to wear Variable load performance Resistance to freezing Ability to handle dirt Back pressure performance	Thermostatic	Thermostatic
Shell and Tube heat Exchangers	Back pressure performance Gas venting Failure mode (open) Resistance to wear Resistance to hydraulic shock Ability to purge system Ability to handle dirt Ability to vent gases at low pressures Energy conservation	Inverted bucket with large vent (constant pressure) Float and Thermostatic (variable pressure)	Thermostatic

Table 13 (Continued)
Steam Trap Selection Guide

Application	Special Considerations	Primary Choice (a)	Alternate Choice
Process Air Heaters	Energy conservation	Inverted bucket	Float and Thermostatic
	Ability to vent gases		
	Ability to purge system		Thermodynamic
	Operation against back pressure		
	Response to slugs of condensate		
	Method of operation		
Steam Kettles:			
Gravity Drain			
	Energy conservation	Inverted bucket	Thermostatic
	Resistance to wear		
	Resistance to hydraulic shock		
	Ability to purge system		
	Ability to handle dirt		
Siphon Drain			
	Energy conservation	Thermostatic	
	Resistance to hydraulic shock		
	Ability to vent air at low pressures		
	Ability to handle air start-up loads		
	Ability to handle dirt		
	Ability to purge system		
	Ability to handle flash steam		

NOTE: (a) Thermostatic traps should be used in any application where freezing temperatures may occur.

Table 14
Steam Trap Operating Characteristics

CHARACTERISTICS	BELLOWS THERMOSTATIC	BIMETALLIC THERMOSTATIC
Method of operation (discharge)	continuous (1)	semi-modulating
Operates against back pressure	excellent	poor
Venting capability	excellent	excellent
Load change response	good	fair
Handles dirt	fair to good	good
Freeze resistance	excellent	excellent
Waterhammer resistance	poor	excellent
Handles start-up loads	excellent	fair
Suitable for superheat	yes	yes
Condensate subcooling	5-30 degrees F	50-100 degrees F
Usual failure mode	closed (2)	open

Table 14 (Continued)
Steam Trap Operating Characteristics

CHARACTERISTICS	DISK	F&T	INVERTED BUCKET
Method of operation (discharge)	intermittent	continuous	intermittent
Operates against back pressure	poor	excellent	excellent
Venting capability	good (3)	excellent	fair
Load change response	poor to good	excellent	good
Handles dirt	poor	poor to good	excellent
Freeze resistance	good	poor	poor (5)
Waterhammer resistance	excellent	poor	excellent
Handles start-up loads	poor	excellent	fair
Suitable for superheat	yes	no	no
Condensate subcooling	steam temperature	steam temperature	steam temperature
Usual failure mode	open (4)	closed	open

1. Can be intermittent on low roads.
2. Can fail open due to wear.
3. Not recommended for very low pressure.
4. Can fail closed due to dirt.
5. May be insulated for excellent resistance.

c) The float and thermostatic trap may be used in most heating applications where air must be vented and the condensate main is above the trap. Two trap functions are contained in one housing; a thermostatic vent trap and a high capacity float trap for condensate removal.
d) Inverted bucket traps are used on low-pressure systems, particularly with blast coils or unit heaters. The discharge from this type of trap is intermittent and requires a definite pressure differential.
e) The various impulse and thermodynamic traps depend upon the difference in specific volume of steam and water to limit flow through a fixed size orifice for flow control. These traps do not work well in a system where the condensate can back against the operating mechanism of the trap and open it when there is no condensate flow from the upstream side. These traps are particularly useful for steam tracing of pipe lines where there will be some flow at all times.

7.4.2 Trap Limitations. Federal Specification WW-T-696 covers a number of the more commonly used steam traps. The following limitations are provided for consideration when selecting the type of trap to use:

a) Bucket trap.
   (1) Trap will not operate where a continuous water seal cannot be maintained.
   (2) Must be protected from freezing.
   (3) Air handling capacity not as great as for other types of traps.
b) Ball float trap.
   (1) Must be protected from freezing.
   (2) Operation of some models may be affected by water hammer.
c) Disk trap.
   (1) Not suitable for pressures below 10 psi.
   (2) Not recommended for back pressures greater than 50 percent of inlet pressure.
   (3) Freeze proof when installed as recommended by manufacturer.
d) Impulse or orifice trap.
   (1) Not recommended for systems having back pressure greater than 50 percent of the inlet pressure.
   (2) Not recommended where subcooling condensate 30 degrees F below the saturated steam pressure is not permitted.
e) Thermostatic trap.
   (1) Limited to applications in which condensate can be held back and subcooled before being discharged.
   (2) Operation of some models may be affected by water hammer.
   (3) Diaphragm and bellows types are limited to applications of 300 psi and 425 degrees F maximum.

f) Combination float and thermostatic trap.
   (1) Cannot be used on superheated steam systems.
   (2) Must be protected from freezing.
   (3) Operation of some models may be affected by water hammer.

7.5 Sizing Traps. Factors that affect the accuracy of trap sizing are: (1) the unavoidably large range in condensate load for many steam services, (2) the wide variance in operating pressure and differential pressure, and (3) the uncertainty of trap capacity because of error in estimating condensate temperature. Sizing errors can offset most of the system savings provided by trapping. Traps that are too small cause condensate to back up. Oversized traps allow live steam through. Along with selection of the proper type of trap, correct sizing is the important step in establishing trapping standards for your system. In setting up standards, a review of past practices against current results may avoid repeating errors in sizing.

Determining the correct size trap requires:

a) Calculating or estimating the maximum condensate load.
b) Determining the operating pressure differential and the maximum allowable pressure.
c) Selecting a safety factor.
d) Sizing the type of trap from manufacturers' capacity tables.

7.5.1 Condensate Load. The amount of condensate generated by items of equipment can generally be obtained from equipment manufacturers' literature. For most all applications, formulas, tables and graphs are available in steam trap manufacturers' brochures for calculation of condensate loads. Examples of simplified estimating aids are shown in Table 15.

7.5.2 Pressure Differential. One element in trap capacity is the difference in pressure between the supply line and condensate return. Of course, if the trap discharges to the atmosphere, the differential pressure will be the supply pressure. For sizing traps, the maximum steam operating pressure would be used. Frequently, traps are installed with the outlet connected to a return system which is under some pressure. The trap must operate against this pressure plus a static head if the trap is required to lift the condensate to a return at a higher level. Table 16 gives examples of the reduction in trap capacity caused by this back pressure which must be taken into account when sizing traps.

7.5.3 Safety Factor. The safety factor is a multiplier applied to the estimated condensate load since trap ratings are based on maximum discharge capacity (i.e., continuous flow ratings). Safety factors are provided in manufacturers' literature and are usually expressed in terms of the trap application. The safety factor may also be expressed for the type of trap used. Factors vary from 2:1 to 10:1 and are influenced by the operational

characteristics of the trap, accuracy of the estimated condensate load, pressure conditions at the inlet and outlet, and the configuration of the installation design.

Table 15
Estimating Condensate Loads

INSULATED STEAM MAIN

lb/hr of condensate per 100 LF at 70 degrees F
(at 0 degrees F, multiply by 1.5)

Steam Pressure (psig)	Size of Main (inches)					
	2	4	6	8	10	12
10	6	12	16	20	24	30
30	10	18	25	32	40	46
60	13	22	32	41	51	58
125	17	30	44	55	68	80
300	25	46	64	83	103	122
600	37	68	95	124	154	182

GENERAL FORMULAS

Application		lb/hr of condensate
Heating Water	=	GPM ÷ 2 x temperature rise degrees F
Heating Fuel Oil	=	GPM ÷ 4 x temperature rise degrees F
Heating Air	=	CFM ÷ 900 x temperature rise degrees F
Heating: pipe coils and radiation	=	A x U x ΔT ÷ L

A = area of heating surface, square feet
U = heat transfer coefficient (2 for free convection)
ΔT = steam temperature - air temperature, degrees F
L = latent heat of steam, BTU/lb

Table 16
Percentage Reduction in Steam Trap Capacity

INLET PRESSURE (psig)	BACK PRESSURE (PERCENT OF INLET PRESSURE) 25 percent	50 percent	75 percent
10	5 percent	18 percent	36 percent
30	3 percent	12 percent	30 percent
100	0	10 percent	28 percent
200	0	5 percent	23 percent

If the condensate load and pressure conditions can be accurately determined, the safety factor used can be low, which helps avoid oversizing. When experience with the steam system and equipment, and thoughtful engineering of trap sizing are applied, safety factors in the range of 2:1 to 4:1 are adequate for all but the most unusual conditions. When sizing from manufacturers' capacity ratings, make sure the ratings are based on flow of condensate at actual temperatures rather than theoretical rates or cold water flow tests.

7.6 Installation Guidelines. The establishment of standards for steam traps in your system includes standards for optimum location and correct installation. While this handbook cannot cover design and installation standards for the myriad of system and equipment conditions, the following are some general guidelines that can be used in establishment of standards, training, and applied in system upgrade efforts.

a) One of the most important aspects of every steam trap installation is that traps should be installed so they may be easily and quickly removed for service or replacement. All traps should be installed with unions on either side of the trap spaced to a standard overall dimension. Upstream and downstream service valves should be provided. Typical piping arrangements are shown in Figure 108.
b) A test discharge with valve should be installed after the trap in return condensate systems.
c) Inlet and outlet piping to a steam trap should be equal to or larger in size than the steam trap tappings. Each manufacturer specifies piping arrangements. The simplest styles have a single inlet and outlet, while others have multiple inlets and outlets. All unused inlet and outlet ports must be plugged. When using teflon tape thread sealant, at least one thread should be left exposed on the outside to ensure that tape is not cut off on the inside and carried into the trap.

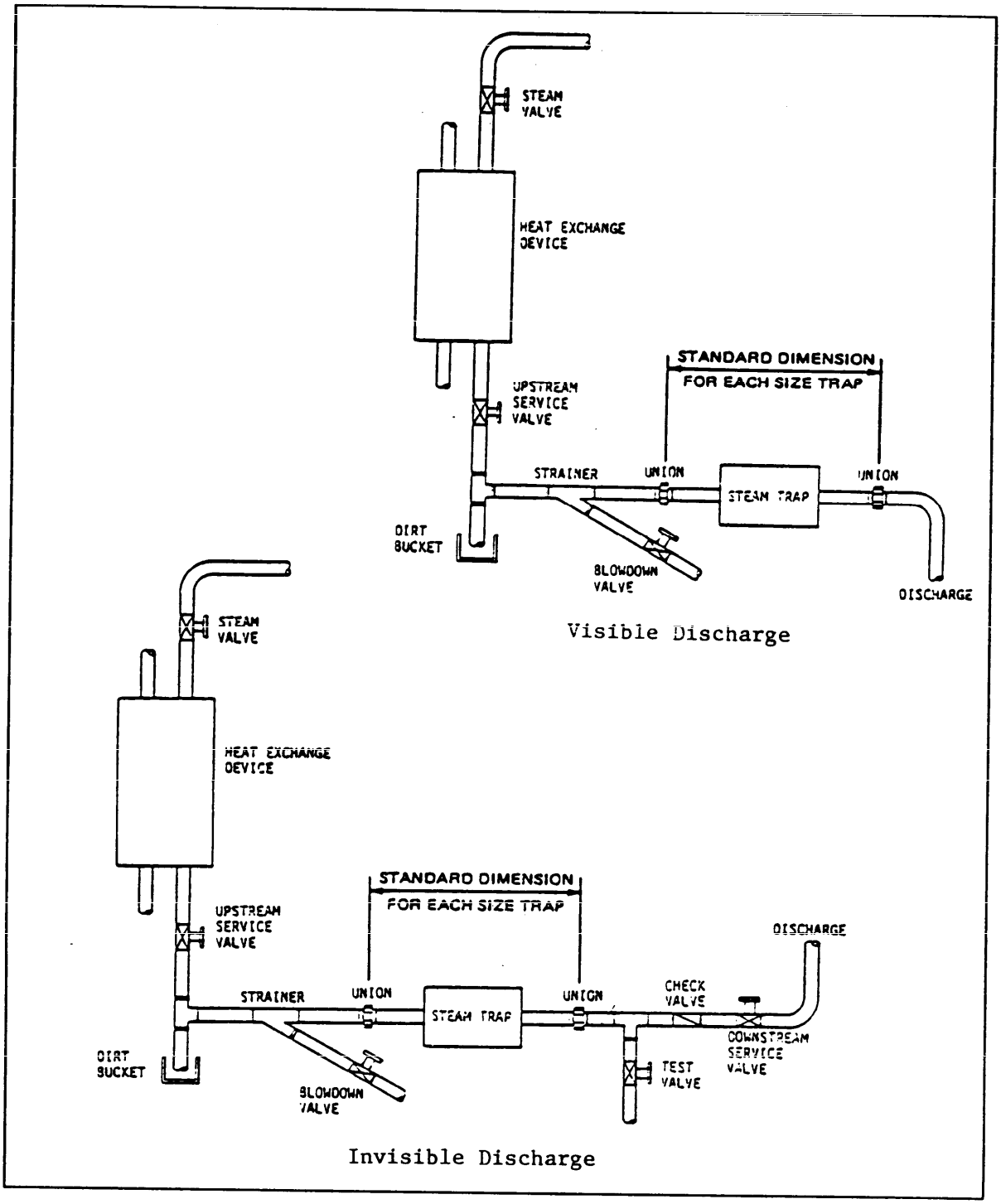

Figure 108
Typical Steam Trap Installations

d) A recent trend in trap design is the use of nonrepairable stainless steel construction. These traps are lighter, more compact, and have the same internal mechanism as the bolted styles. The use of cast iron traps is restricted to systems with a working pressure of 250 psig or less.

e) All lines should slope in the direction of flow. If not properly pitched, pockets of condensate may develop which contribute to water hammer. If the return line rises, a check valve should be installed on the discharge side of the trap.

f) Traps are provided with permanent markings indicating the direction of flow. Float, thermostatic, and bucket traps depend on gravitational forces to operate properly and must be correctly oriented. Disk trap life may be doubled if they are installed horizontally so that gravity keeps the disk resting on its seat.

g) Occasionally, the upstream side of a trap may have a lower pressure than the downstream side if the steam valve is modulated closed. For this reason, some manufacturers install vacuum breakers on the top of their float and thermostatic traps to allow atmospheric pressure into the body of the trap. This permits any vapor lock to be broken, which in turn allows a positive pressure to cause a flow through the trap.

h) Float and thermostatic traps are widely used in low pressure heating systems. If they are properly installed below the steam space, they are effective in removing all of the condensate which forms. They are never made with less than 3/4-inch tappings and have been made with up to 3-inch tappings. Float and thermostatic traps may be used where there is a varying load so long as the maximum load does not exceed the trap's capacity.

i) Most float and thermostatic traps are rated somewhat artificially following a formula devised by the major manufacturers. As a consequence, a larger than normal safety factor is incorporated in the ratings shown in most catalogs.

j) Bimetallic traps are resistant to damage by water hammer and will allow unrestricted discharge of air on start-up. The latest bimetallic steam trap designs allow condensate discharge near the saturation temperature over a specified pressure range with minimum loss of steam. These traps, however, do a poor job of handling air and noncondensables after start-up.

k) The thermostatic trap's principal use is in comfort heating systems. It allows air and noncondensables to escape on start-up. The fact that it does not always discharge condensate at saturation temperature is not a serious drawback in heating service. These traps are inexpensive for low pressure applications and are typically available in sizes from 1/2 inch to 2 inches.

l) Inverted bucket traps are especially suited to large or small capacity applications where water hammer may be a problem. Inverted bucket traps are subject to freezing in outdoor

applications since they must retain a water seal in order to operate. Some inverted bucket traps may be effectively insulated with preformed, snap-on insulation that is removable and reusable. They have moderate air handling capability, very near that of float and thermostatic traps. Inverted bucket traps are recommended for unit heaters where there is no modulation of steam pressure. Strainers may be built into the bottom of inverted bucket traps to collect sediment. Inverted bucket traps are the most resistant of all traps to the effects of sediment.

m) Traps that are undersized for the pressure drop and condensate load will not effectively remove the condensate from the system. Traps that are not placed sufficiently below the system will also not drain properly. Traps without sufficient air handling capacity will lead to air blockage and prevent the proper operation of heating and other steam operated equipment. In general, steam traps should be located as close to the source of the condensate load as is practical.

n) Traps discharging into relatively high pressure areas may not always function properly. The flow may reverse and destroy weaker parts of the mechanism. Traps discharging into a return line higher than the trap level fall into this category.

o) Inverted bucket and float and thermostatic traps in outdoor installations may freeze when the steam is throttled and insufficient heat is available. No steam trap is freezeproof despite manufacturers' claims to the contrary.

p) Thermostatic and disk traps must give off heat in order to function properly and, therefore, must not be insulated. To ensure adequate opportunity for heat transfer, an 18-inch length of pipe adjacent to the trap's inlet should also be uninsulated. Inverted bucket traps, however, do not need to lose heat in order to function and may be insulated as mentioned above.

q) Condensate from a high-pressure steam system should not be introduced into the return lines of a lower pressure system unless these return lines are of adequate size. The higher pressure condensate tends to flash (i.e., expand into steam again) at the lower pressure and occupy much more volume than it did as condensate. This, in turn, prevents the traps associated with the low-pressure system from operating properly. Water hammer may result from discharging high pressure condensate into a cooler lowpressure return system.

r) There is no such thing as a "lifting" steam trap. Condensate will only be "lifted" to a return system if there is sufficient pressure difference to overcome the static head.

s) Balanced pressure thermostatic traps may be destroyed if there are long runs of pipe between the source of the condensate and the trap.

t) Bypass connections should not be used as a means of providing condensate removal even during short periods necessary for maintenance. A replacement trap should be installed. Bypass connections waste an enormous amount of energy even in very short periods of time.

7.7 Implementing Standards. Application of the selection criteria should result in relatively few standard types for the great majority of trapping stations. Do not sacrifice efficient trapping solely for the sake of fewer types, but balance the standards against the advantages of easier maintenance and smaller inventory. Classify the types of traps selected by application, operating pressure, and condensate load. The standard types can be listed in a table showing these elements similar to Table 17.

Table 17
Example of a Standard Steam Trap Selection Table

APPLICATION/OPERATING PRESSURE (psig)	CONDENSATE LOAD (lb/hr)		
	10	100	1,000
Steam Mains:			
0-15	(Enter types of traps selected as standard for your system)		
0-15			
150-600			
Unit Heaters:			
(etc.)			

As traps are sized, the type and size will merge in your plant standards. A sizing chart can then be developed around the types, pressures, and loads for use in sizing new installations.

A few standard installation schematics can be drawn that will apply to the majority of your trap installations. The goal is to reduce the number of variations and to portray the standards for continuing use by maintenance shops. Figure 108 provides an example.

All of these standards can usually be documented on one or two drawings including the trap type table, sizing chart and installation schematics. Keep it simple, make it accessible to all, and enforce use of the standards.

7.8 Economic Benefits of Proper Inspection and Maintenance. Steam is expensive. The cost of fossil fuels will undoubtedly remain high, so production costs will not decrease. Aging physical plants demand increasing

inspection and repair and an increasing share of the operation and maintenance dollars. Well planned and engineered steps must be taken to counter these influences on the cost of producing and delivering steam. The amount of steam lost by steam traps can be substantially reduced through routine inspection and maintenance that pays for itself in direct savings.

For example, a simple 1/2-inch thermodynamic disk trap can be as wasteful as a 1/16-inch hole in a 100-psig steam line and may lose approximately 13,300 pounds of steam per month. Similarly, a 3/4-inch bucket trap which fails in the open position on that same 100-psig steam supply line is equivalent to a steam loss of approximately 1,500 pounds per hour or 1,000,000 pounds of steam lost per month. A 1/4-inch steam leak at 100 psig will waste 210,000 pounds per month. Table 18 illustrates the magnitude of steam and dollar losses in steam leaks for a pressure of 100 psig.

Table 18
Examples of Steam Loss for Various Orifice Sizes at 100 psig

ORIFICE SIZE	STEAM LOSS PER MONTH (LB)	COST PER MONTH AT $10/Mlb	COST OF STEAM LOSS PER YEAR
1/2 in.	835,000	$8,350	$100,200
3/8 in.	470,000	7,700	56,400
1/4 in.	210,000	2,100	25,200
1/8 in.	52,500	525	6,300

The prevention of steam loss through faulty steam traps provides direct, immediate utility operations savings. Of equal concern are the economic benefits of efficient heat transfer and prevention of steam system corrosion gained through proper operation of steam traps. As discussed in Section 1, the efficient removal of condensate, air, and carbon dioxide will aid in the following ways:

a) Removal of air will help maintain higher temperatures.
b) Removal of air by traps can improve heat transfer efficiency under certain conditions by up to 50 percent.
c) Removal of condensate reduces water hammer, improves heat transfer, and provides more space for steam.
d) Oxygen pitting and formation of corrosive carbonic acid are greatly reduced.

The economic comparison between losing steam on one hand and repairing or replacing steam traps on the other can be estimated. Similarly, a comparison of costs between a neglected system and continuous inspection and maintenance

can be estimated. The following broad examples are based on generalized industry statistics. More relevant comparisons can be made using specific activity cost figures and experience.

7.8.1 Replacing Old or Faulty Traps. The cost of delivered steam at Navy activities can range between $8 and $12 per 1,000 pounds (Mlb). Using $10 per Mlb in the 1/2-inch thermodynamic disk trap, extrapolation from Table 18 yields a steam loss with a cost of approximately $131 per month (assuming an orifice size of 1/16 inch with a resultant loss of one quarter of that of an 1/8 inch orifice). An average cost to replace the trap, including labor and material, may be approximately $200 to $250. Payback would be within 2 months.

The 3/4-inch bucket trap cited would be losing steam at a rate of $10,000 per month, as an extreme example, and replacement would pay for itself in one day.

With the high cost of producing and delivering steam, replacement or overhaul of failed steam traps provides significant economic benefits. Even for the larger traps in a normal system, with a nominal loss of steam, replacement payback would be measured in terms of a few months.

New traps, on the average, use about 2 pounds/hour of steam in operation. As traps wear with age, this quantity increases at a rate of approximately 3 pounds/hour per year until into the third year of the trap use. The steam used, in one sense wasted, by the average trap can then increase by as much as 8 pounds/hour per year. Some guidance has been to replace or rebuild traps on a 5-year cycle. By that time, the average trap may be using as much as 20 pounds/hour even though continuing to operate.

At an average cost of $10 per Mlb, a 5-year-old trap could be using:

$$20 \text{ lb/hr} \times 24 \text{ hr} \times 365 \text{ days} \times \frac{\$10}{1{,}000} = \$1{,}750/\text{yr} \tag{4}$$

Replacement or overhaul in much less than 5 years is clearly economical, since an average trap can be purchased and installed for $200 to $250.

A study performed at the Naval Postgraduate School developed a guide for calculating the optimum time for trap replacement as:

$$\textit{Time in service} = \sqrt{\frac{\textit{cost of trap replacement } (\$)}{11.3 \times \textit{cost of steam } (\$/\textit{Mlb})}} \tag{5}$$

For example, if a trap costs $250 to replace, and steam is costing $10 per Mlb to produce:

$$\textit{Time} = \sqrt{\frac{\$250}{11.3 \times \$10}} = 1.5 \textit{ years} \tag{6}$$

Of course, no activity needs to replace good operating traps every year and a half, but the increase in steam lost as a trap ages is a strong consideration in your replacement and trap rebuilding planning. This formula illustrates the point that a relatively small quantity of steam lost each hour can make frequent trap replacement economical. Replacement time depends a great deal upon the type of trap and its design.

7.8.2 Continuous Inspection and Maintenance. Industry experience shows that steam systems operating without a planned program have between 10 to 50 percent of the traps malfunctioning at any one time. A sample survey of your system can provide a statistical indication of the number of faulty traps for preliminary estimating purposes. Average steam losses can also be predicted. A general example of potential savings from a formal program is illustrated. Assume a 20 percent trap failure rate before the program is implemented, and 5 percent failure rate after the program is fully implemented.

Gross Savings = (steam loss before) - (steam loss after)
Net Savings = (Gross Savings) - (cost of inspection/maintenance)

Trap Failure Rate	Total Traps	Failed Traps	Average Leak Rate/Trap	Cost of Lost Steam per Year
Before: 20 percent	500	100	15 lb/hr = 131,000 lb/yr	131 Mlb x $10/Mlb x 100 traps = $131,000
After: 5 percent	500	25	15 lb/hr = 131,000 lb/yr	131 Mlb x $10/Mlb x 25 traps = $32,750

Gross Savings = $131,000 - $32,750 = $98,250/yr

Cost of Program:

Inspection: Quarterly, 0.5 man-hour (mh)/trap
= 1,000 mh/yr x $25/mh = $25,000/yr

Maintenance: 50 percent of traps/yr
= 250 traps x $50/trap = $12,500/yr

Net Savings = $98,250 - $37,500 = $60,760/yr

The examples above consider only the cost of steam lost from failed traps, which is fairly simple to estimate and price. The economic benefits of improved heat transfer and corrosion prevention cannot be readily quantified, but are no less real. In a system producing, say, 300 million pounds of steam per year at a total cost of $3 million, approximately 75 percent of the cost is fuel; a direct variable cost. A 1 percent improvement in the efficiency of the system could save over $20,000 a year in fuel cost alone. By all measures, a conscientious and well executed steam trap inspection and maintenance program pays for itself many times over.

7.9 Establishing an Inspection and Maintenance Program. The steps required to set up an effective program are:

Baseline Survey. The initial survey provides or verifies records of steam trap location and type, provides a steam trap map, determines the baseline condition of the trap inventory, and checks installation and use to determine if there have been misapplications.

a) Establish System Standards. Standards for types, sizes, and installation of traps eliminate misapplication, reduce inventory and system costs, and provide a basis for budgeting and trap replacement planning.
b) Training. As a formal program is established, the people involved in operation, inspection and maintenance, energy conservation, and engineering must be trained and indoctrinated in the goals of the program.
c) Equipment. Proper equipment for inspection will pay for itself in improved trap uptime and savings in manpower.
d) Establish Inspection Schedules. A balance between the cost of inspection and potential savings in operational costs must be achieved.
e) Accurate Records. Records that are easy to keep, which induce accurate entries, and support the program are a must.
f) Improve Condition of the System. A longer range, but integral objective in establishing a formal program is to bring the condition of the steam traps to a level where inspection and maintenance are routine "moneymakers" rather than an uphill battle.

7.9.1 Baseline Survey. An effective program requires accurate knowledge of the steam trap inventory and its condition. The initial survey, to establish the baseline or to verify and augment existing records, should be a planned effort which results in:

a) Location, type, and size of each trap.
b) Function and sizing information (if available) for each trap to determine misapplications and sizing errors.
c) Pressure at inlet and temperature at inlet and outlet.
d) Activity-wide steam trap maps.
e) Current operating condition of each trap.

The survey planning can separate the activity into manageable segments by geographical area or by type of steam system/use. The system can be "mapped" more easily by segments and the separate areas will be useful in continuing inspection. The survey should locate traps hidden by equipment, insulation or other piping. Each trap should be assigned an identification number or symbol and tagged during the initial survey to facilitate future inspections and maintenance reports. The survey will provide information about existing conditions that may be used to estimate potential savings compared to maintenance and repair costs.

A technique that can be productive is to establish and publicize a "hot line" telephone number for all base personnel to report steam leaks and suspected trap or system problems. Set this up at the beginning of the baseline survey and keep it as a part of the continuing inspection.

Steps to be taken in conducting the baseline survey are as follows:

a) Divide the activity and steam systems into survey areas.
b) Prepare steam trap maps for survey mark-up.
c) Indoctrinate survey inspectors.
d) Prepare survey forms. An example form is shown in Figure 109.
e) Design trap identification system and prepare tags.
f) Conduct the survey.
g) Compile the data; analyze the results.
h) Estimate number of failed traps, probable steam loss, cost of repair or replacement, and potential savings.
i) Set goals for immediate inspections, near-term repair or replacement, and system upgrade.

7.9.2 System Standards. Standards for types and sizes of traps for given applications can minimize the potential for misapplication and usually reduce the number of different traps in the system. The inventory of replacement traps can then be reduced, and maintenance procedures become more standardized.

7.9.3 Training. Even if you have people who are experts in steam traps, establishment of a formal inspection and maintenance program requires indoctrination of all concerned. This training begins with planning for the baseline survey. In addition to training utilities operation and maintenance personnel, those involved in engineering, planning and estimating, and procurement of steam traps should be familiar with the elements of the program. This handbook can provide the basis for training. Typical topics for three types of indoctrination/training sessions are shown in Table 19.

STEAM TRAP BASELINE SURVEY

DATE:_____ AREA/MAP NO.:_____ INSPECTOR:_____

Trap Tag No.	Bldg/Grid Location	Type, Mfg, Model	Size	Location Description	Installation/ Service Description	O-Oper. F-Failed	Priority for Action/Remarks 1-Immed. 2-Schedule 3-Backlog

Figure 109
Example Baseline Survey Form

Table 19
Inspection and Maintenance Program Training

TYPE OF TRAINING	TOPICS COVERED	ATTENDEES
Overview of Program	Program purpose, scope and goals	Engineering, Planning
	Records and data analysis	Maintenance Control
	Continuing action	Budget and procurement
	System upgrade plans	Utility supervisors
	Role of each division	Maintenance supervisors
Program Management	Establishing system standards	Engineering, Planning
	Trap selection	Maintenance Control
	Replacement program	Utility supervisors
	Monitoring the program	Maintenance supervisors
	Record keeping	
	Estimating costs and savings	
Inspection	System standards	Maintenance Control inspectors
	Types of traps	Utility supervisors
	Steam loss problems	Maintenance supervisors
	Trap failures	Operation and maintenance personnel
	Inspection methods and equipment	
	Troubleshooting techniques	
	Inspection records	

7.9.4 Equipment. Procurement of efficient and up-to-date equipment to assist inspectors is a necessary step in establishment of the program. The economics of steam losses through faulty traps are such that a few detections will easily pay for the cost of inspection equipment. Also, return on labor and training costs can be ensured by providing inspectors with proper equipment.

The two basic types of inspection equipment are sound detection, and temperature measurement instruments. Available instruments range in sophistication and cost from a simple steel screwdriver to modern ultrasonic monitors for sound and from simple heat sensitive markers to portable infrared equipment for temperature.

For temperature readings, the more costly and sophisticated instruments are hardly ever justifiable. Thermocouple thermometers with hand-held digital readers are sufficient for most applications.

For inspection aided by listening devices, the more sophisticated ultrasonic instruments are recommended where the quantity of traps is sufficient for frequent utilization.

7.9.5 Inspection Schedules. The establishment of a formal program requires setting initial schedules for inspections to follow the baseline survey. When steam was cheap, it was good business to accept a certain amount of steam loss, inoperative traps, etc. The lost steam cost less than the labor to correct the less serious problems. Today, steam costs 10 to 15 times as much as it did only a few years ago, so it now pays to maintain the system at a much higher level. Inspections should be performed more frequently as the first step in raising the level of maintenance.

The frequency of steam trap inspections will be based upon the condition of the system, age of the traps, and percentage of traps found to be faulty in the baseline survey. Inspections will be more frequent for a neglected system and decrease as the system is brought up to standard. Each activity's schedule will depend upon local conditions and analysis of the baseline survey. As a general guide, until the percentage of failed traps is under 10 percent, inspect at least every 2 months. If the failure rate of traps is greater than 5 percent, conduct quarterly inspections. As the failure rate is improved to below 5 percent, inspect biannually.

7.9.6 Records. Data obtained from the baseline survey will provide the basic records for the steam trap inventory. As time and resources permit, additional data for individual traps should be acquired. Most of the information can be gathered during periodic inspections. In addition to the baseline survey data, the following inventory information will be useful for the management of the program:

a) date of installation
b) orifice size
c) end connection type
d) end-to-end dimension
e) insulation requirement

The inventory records must be updated whenever a trap is replaced.

The other type of required record covers inspection and repair. Periodic compilation and review of inspection reports will provide information on the status and condition of steam traps as a whole and the effect of the inspection and maintenance program.

Most steam systems will contain enough traps to make simple automation of the inventory and records worthwhile. Once the baseline survey results are entered into an automated record, maintenance of the records with changes and periodic inspection reports will require less effort than a manual card or listing system. Retrieval, compilation, and review of the records will, accordingly, be economical.

7.9.7 Upgrade of the System. The goal of the inspection and maintenance program is to bring the steam trap inventory to a level where steam losses are negligible and system integrity is sound. Then, inspection and maintenance will be routine with a frequency that is not a burden. Accordingly, planning and execution of the program should include replacement of traps reaching their useful life. An extensive and aging system may require funding of repair projects to augment local maintenance funding in order to "catch up" with neglect of steam traps. As a minimum, an overt planned effort should be scheduled and budgeted to replace old traps and to implement correct standards of trap type and size.

7.10 Inspection Schedules. Continuing inspection frequencies will depend primarily on the condition of the system. The general guide is:

Trap Failure Rate	Inspection Frequency
over 10 percent	two months
5 - 10 percent	three months
less than 5 percent	six months

One manufacturer recommends inspection frequencies based on system pressure:

Pressure	Inspection Frequency
0 - 30 psi	annual
30 - 100 psi	semiannual
100 - 250 psi	quarterly or monthly
over 250 psi	monthly or weekly

Exposed traps should be monitored daily during freezing weather. Also, traps serving critical process equipment should be monitored frequently.

Frequent inspections of the same equipment tend to become cursory in nature. More thorough but less frequent inspections are more effective. The primary goal, though, in scheduling inspections is to achieve a balance between the cost of inspection and steam loss and integrity of the system.

7.11 Safety Precautions. Use the following precautions:

a) Steam lines, traps, and steam equipment are HOT. Follow all safety rules for working where burns are potential.
b) Wear protective clothing and safety gear (hardhat, goggles, gloves, etc.) when appropriate.
c) Steam valves should be opened or closed only by authorized personnel.
d) Always wire valve closed and tag DO NOT OPEN before working on or removing traps and strainers.
e) Always isolate the steam trap from steam supply and pressurized return line before opening the trap for inspection or repair.
f) Always isolate a strainer from pressurized system before opening.
g) Never touch a steam trap with bare hands.
h) For strainer blowdown, wear gloves and a face shield. Catch discharge in a bucket.

7.12 Inspection Methods. The basic methods of inspecting traps are visual observation, sound detection, and temperature measurements. Visual observation is the best and least costly method of checking trap operating condition, but none of the methods provide a cure-all for trap troubleshooting. Any one method can give misleading results under certain conditions. The best inspection is obtained by using a combination of two methods. Procedures for the three methods are covered below.

7.12.1 Visual Observation. Observing the discharge from a trap is the only positive way of checking its operation. No special equipment is required, but training and experience are necessary, particularly for recognizing the difference between flash steam and live steam. See Figure 110.

a) Flash steam is the lazy vapor formed when the hot condensate comes in contact with the atmosphere. Some of the condensate re-evaporates into a white cloud appearing as steam mixed with the discharging hot water.
b) Live steam is a higher temperature, higher velocity discharge and usually leaves the discharge pipe in a clear flow before it condenses to a visible cloud of steam in the atmosphere.

If the trap discharges to a closed condensate return system, it must have a valved test discharge pipe open to the atmosphere installed downstream of the trap.

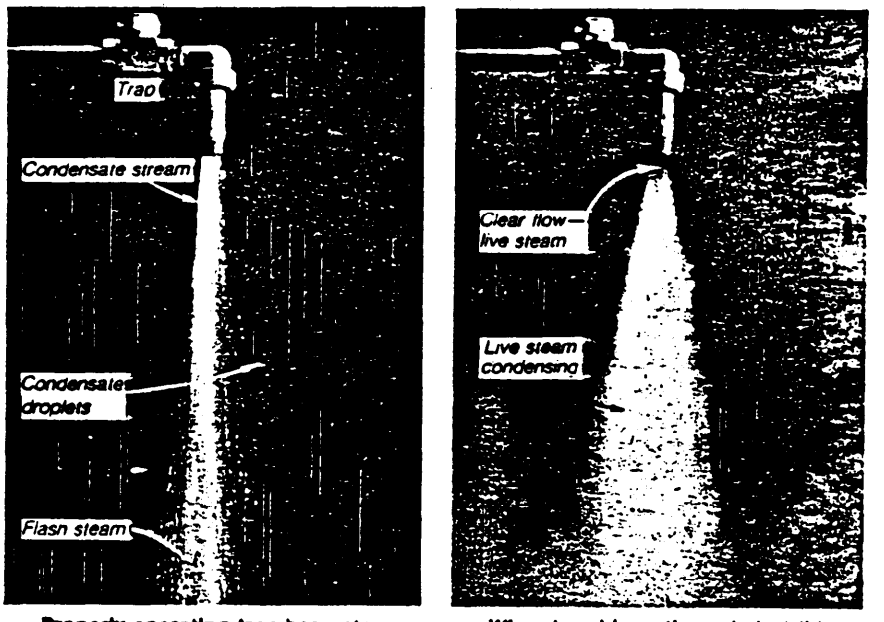

Properly operating trap has water flow stream with some white flash steam

When trap blows through, invisible steam zone can be seen right after outlet

Figure 110
Illustration of Difference Between Flash Steam and Live Steam

A properly operating trap will discharge condensate and flash steam as it cycles. Some types of traps (inverted bucket, disk) have an intermittent discharge, some (float, F&T) should have a continuous condensate discharge, and some types (thermostatic) can be either. The presence of a continuous live steam discharge is a problem. The lack of any discharge flow, also, indicates trouble.

Inspectors should realize that when a trap is under a fairly heavy load the discharge will produce considerable flash steam. A faulty trap may be losing a significant amount of live steam that cannot be detected. In a condensate discharge of, say, 100 pounds/hour, a loss of 10 pounds/hour of live steam will not be visually detectable. This relatively small loss can amount to the cost of a new trap in two to three months. Therefore, if a trap is suspected of being faulty, always check your visual inspection with another method.

A basic part of visual inspection is determining if the trap is cold or hot at operating temperature. One method is to squirt water on the trap top and observe its reaction. The water will not react on a cold trap, but will bubble and bound on a hot trap.

7.12.2 Sound Detection. Listening to traps operate and judging performance, and potential malfunction is a convenient inspection method when working with a closed condensate return system. Experience is required, but much can be derived from the sounds made, or not made, by traps while operating.

By listening carefully to steam traps as they cycle, a judgment can be made whether they are operating properly or not. An inspector can hear the mechanisms working in the disk, inverted bucket and piston traps. Modulating traps give only flow sounds which are hard to detect if the condensate load is low. However, the performance of a suspected trap should be cross-checked visually or by temperature measurements since a trap that does not cycle may be either failed open or under a heavy condensate load.

Simple equipment can be effective, such as industrial stethoscopes or a 2-foot length of 3/16-inch steel rod in a file handle. They are used simply by placing the probe end on the trap bonnet and your ear against the other end.

If you have a large number of traps, and situations where traps are congested or close to other equipment generating noise, ultrasonic listening equipment is warranted. These instruments have earphones, are equipped with probes, and allow selection of sound frequency bands. High frequencies are sensitive to flow noise, and mechanical sounds are detected at low frequencies.

7.12.3 Temperature Measurements. Diagnosing trap condition from temperature differences between upstream and downstream pipes is the least reliable inspection method. It can be useful in combination with visual or sound inspection as long as the potential ambiguities are recognized. Equipment ranges from sophisticated infrared meters, to simple thermometers, to heat sensitive markers. A contact thermocouple thermometer is recommended.

File contact points on the pipe clean. Take temperature measurements immediately adjacent, and no more than 2 feet, on either side of the trap. The readings should be in the ranges shown in Table 20 for the pressures in the supply and discharge/return lines. Interpretation of the temperature readings requires knowledge of the line pressures. For example, a supply line at 150 psig with temperature of 340 degrees F and a 15-psig return line with temperature of 230 degrees F indicate a properly operating trap.

7.13 Inspection Procedures. Before beginning routine periodic inspections, the trap inventory should be in good shape, steam trap maps of buildings and exterior areas should be prepared, and traps should be tagged for permanent identification with stainless steel tags.

Table 20
Normal Pipe Temperatures at Various Operating Pressures

STEAM PRESSURE (PSIG)	PIPE SURFACE TEMPERATURE RANGE (degrees F)
0 (atmosphere)	212
15	225 - 238
30	245 - 260
100	300 - 320
150	330 - 350
200	350 - 370
450	415 - 435
600	435 - 465

Inspectors should be provided with efficient and convenient equipment. A suggested list follows and is illustrated in Figure 111.

a) Carrying pouch and belt.
b) Clipboard with trap lists and trap maps.
c) Maintenance requirements tags (yellow and white).
d) Valve wrench.
e) Water squeeze bottle.
f) Ultrasonic sound detector.
g) Thermocouple thermometer.

Each activity will devise its own best methods for conducting inspections and identifying work required. Use of two different colored tags, as in the list above, is one method for identifying cold traps for investigation and failed or faulty traps for maintenance and repair.

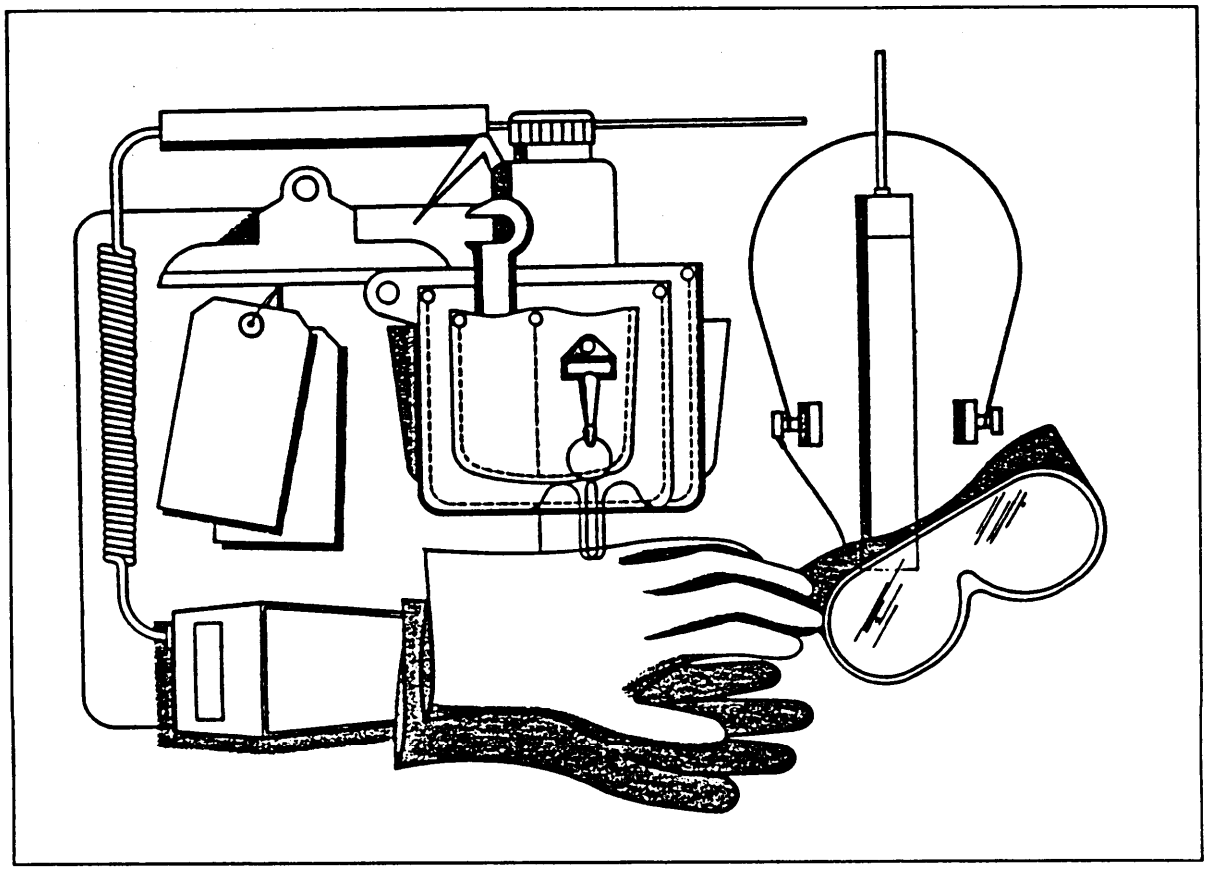

Figure 111
Steam Trap Inspection Equipment

The following inspection checkoff list is a summary of steps for routine inspections.

FOR ALL TRAPS:

Is steam on?
Is trap hot - at operating temperature?
Wet test for signs of a hot trap. Squirt a few drops of water on trap. Water should start to vaporize immediately. If it does not, this indicates a cold trap.
Tag cold traps with a yellow tag for maintenance check to determine if it is a system or trap problem.
Blowdown strainer.

SOUND CHECK HOT TRAPS:

Listen to trap operate.
Check for continuous flow
- low pitch condensate flow
- high pitch steam flow

Check for intermittent flow.

Is trap cycling?
Note mechanical sounds.

VISUAL CHECK TRAPS THAT SOUND BAD:

Close valve to return line.
Open discharge valve.
Observe discharge for:
- normal condensate and flash steam
- live steam
- continuous or intermittent operation

TEMPERATURE CHECK IF NECESSARY:

Clean spots upstream and downstream of trap for measuring temperature.
Record supply line pressure.
Measure supply line temperature.
Record return line pressure.
Measure return line temperature.
Tag failed traps with white tag for replacement/shop repair.

CHECK EXTERNAL CONDITIONS:

Supports and braces
Insulation
Corrosion
Leaks

7.14 Inspection for Misapplication. Inspectors should be aware of and inspect for the following potential misapplications and installation problems:

a) Trap installed backwards or upside down.
b) Traps located too far away from the equipment being services.
c) Piping runs too long.
d) Traps not installed at low points or sufficiently below steam-using equipment to ensure proper drainage.
e) Traps oversized for the conditions. Oversized traps allow live steam blow-through.
f) More than one item of equipment served by one trap. "Group trapping" is likely to short circuit one item due to differences in pressure and other items will not be properly drained.
g) The absence of check valves, strainers, and blowdown cocks where required for efficient operation.
h) Trap vibration due to insecure mounting.
i) Bypass line with valves open. If a bypass is necessary, it should be fitted with a standby trap.
j) Condensate line elevation higher than steam pressure can lift. No trap lifts condensate; the inlet steam pressure does.

k) Inverted bucket and float and thermostatic traps, particularly, exposed to freezing temperatures.
l) Insulated thermostatic and disk traps. These traps must give off heat to function.
m) Disk trap with excessive backpressure, therefore, differential pressure is too low for the trap to operate properly.

For trap location, check the ABCs:

a) Accessible for inspection and repair.
b) Below drip point whenever possible.
c) Close to the drip point.

7.15 Trap Failures. Traps generally fail completely closed or open. By failing closed, there is a backup of air and condensate which floods the equipment and prevents the equipment from performing its heat-transfer function. By failing open, air, condensate, and steam continue through the trap and into the condensate system, thus wasting steam and affecting other heat transfer equipment by excessive pressures and temperatures in the return lines. Major causes of trap failure are residue buildup and wear.

7.15.1 Residue. Dirt, rust, and foreign particles can build up in steam traps quite readily, as the trap body forms a natural pocket for collection when the valve is closed. Dirt pockets should be installed on all steam header drip legs and the strainers should be opened periodically for blowdown. Strainers, whether installed before the trap or included in the body of the trap, should have blowdown cocks installed to encourage cleaning. Installed, operating strainers are one of the most important protections for traps, but are only as good as their care. All strainers should be blown down every inspection.

Residue between the seat and disk may cause a trap to fail open and residue buildup in the trap body may cause a trap to fail closed.

Piston impulse traps, disk traps, and orifice traps should have a finer mesh strainer due to their small holes.

7.15.2 Wear. Wear of internal parts, linkages, and seals will cause trap failures in both the open and closed positions. When the mating surfaces of valves and valve seats wear out, there is a tendency for an initial leak to enlarge by a process called "wire-drawing" which shows up as a small "gully" worn across the mating surfaces. Also, valves that are partially open because of residue lodged between the valve and seat can initiate wiredrawing, since steam will follow the condensate and cut the mating surfaces with its high speed.

Cast iron and steel traps are often subject to the valve seat becoming loose due to the erosive effect of flashing condensate. This results in leaks many times greater than a failed new trap.

Continuous operation and excessive use will cause links, levers, pins, pivots, and elements to change shape and malfunction due to wearing.

If trap failure persists and a comprehensive inspection indicates that the failure is not due to residue buildup or wear, the inspector may determine the problem to be actual system troubles rather than trap malfunction.

7.16 Troubleshooting. During periodic inspections, inspectors will have many traps to inspect within relatively short times. Fast identification of a faulty or failed trap is important. If the nature of the problem can also be identified, so much the better. Economical, cost effective inspection, though, depends on specifying the problem traps with the least expenditure of manpower. Correction of the problems can, then, be scheduled in a consolidated, planned, efficient manner by the shops.

Troubleshooting begins with the knowledge of trap operations and combines the methods of inspection with familiarity with trap misapplications and potential failures discussed in this section. Table 21 outlines the basic indicators of normal operations and problems for the various types of traps.

7.17 Inspection Reports and Records. An example inspection log is shown in Figure 112. This log is intended to report results of periodic inspections and is a temporary record. The log does not, in general, need to repeat data contained in the steam trap inventory record.

Permanent inspection and repair records are an important element in the inspection and maintenance program. The record provides information needed to identify chronic problem areas, develop life cycle costs, and generally aid in upgrading the steam system. The inspection reports would be transferred from the inspection log, as applicable, to the permanent record. The following data should be included in the permanent record:

a) Trap identification and location
b) Date initially installed
c) Scheduled inspection frequency
d) Date of last inspection
e) Date and description of last repair

An alternative system that can be used if automation of the permanent trap records is not feasible is an index card system. Each trap has its own index card with identifying/inventory data entered. The card is carried by the inspector during period inspections and the result is entered. Note index cards should be giving a numerical count index so as to be able to detect any missing or misplaced cards. One index card may allow room, front and back, for 10-12 inspections. To be useful, the data must then be compiled manually from hundreds or thousands of cards. This system is much less effective than the temporary inspection log with data being entered into a report generating system.

Table 21
Troubleshooting Steam Traps

TYPE TRAP	NORMAL OPERATION	PROBLEM INDICATION	POSSIBLE CAUSE
		VISUAL INSPECTION	
All Types	Trap hot under operating conditions.	Live steam discharge; little entrained liquid.	Failed open.
	Discharge mixture of condensate and flash steam.	Condensate cool; little flash steam.	Holding back condensate.
	Cycling open/close depending on type of trap.	No discharge.	Failed closed; clogged strainer; line obstruction.
	Relatively high inlet temperature.		
		Leaking steam at trap.	Faulty gasket.
		TEMPERATURE MEASUREMENT	
		High temperature downstream.	Failed open.
		Low temperature upstream.	Failed closed, clogged strainer, line obstruction.
Float and F&T	Continuous discharge on normal loads. May be intermittent on light load.	SOUND INSPECTION	
		Noisy; high pitch sound.	Steam flowing through; failed open.
	Constant low pitch sound of continuous flow.	No sound.	Failed closed.

Table 21 (Continued)
Troubleshooting Steam Traps

TYPE TRAP	NORMAL OPERATION	PROBLEM INDICATION	POSSIBLE CAUSE
Thermo-static	Discharge continuous or intermittent depending on load, pressure, type.	Same as for float trap above.	
	Constant low pitch sound of continuous or modulating flow.		
Inverted Bucket	Cycling sound of bucket opening & closing.	Steam blowing through. No sound.	Failed open. Failed closed.
	Quiet steady bubbling on light load.	Discharging steadily; no bucket sound.	Handling air; check again in hour.
		Discharging steadily; bucket dancing.	Lost prime.
		Discharging steadily; bucket dancing after priming.	Failure of internal parts.
		Discharging steadily; no bucket sound.	Trap undersized.
Disk	Intermittent discharge.	Cycles faster than every 5 seconds.	Trap undersized or faulty.
	Opening and snap-closing of disk about every 10 seconds.	Disk chattering over 60 times/minute or no sound.	Failed open.

STEAM TRAP INSPECTION LOG

DATE: _____ INSPECTOR: _____

TRAP I.D.	LOCATION	OPERATING	INSPECTION REPORT	REPAIR PRIORITY

Figure 112
Example of Inspection Log

7.18 Trap Repair and Replacement. Developing and implementing standard trap and piping configurations and dimensions will help avoid installation errors and reduce downtime. Inlet and discharge pipe sections, valves, strainer, trap, and unions for the more commonly used types and sizes can be made up and stored. When a trap requires shop repair, the replacement can be installed quickly. The repaired trap can be made up as a spare and kept in stock.

As an installation safety measure, different capacity traps may be configured with different end-to-end measurements to avoid installing a wrong size trap.

A repairable steam trap suspected of failure must first be disassembled to inspect the interior condition of the valve body as well as the internal working parts of the valve. Remove dirt, debris, and foreign matter from the trap to ensure the valve interior is clean. Inspect all mechanisms and linkages for damage, distortion, and freedom of movement.

Common reasons for trap failure or malfunction are listed in Table 22. Look for these items first. If field conditions permit, such as good access to the trap, space to work, and system downtime is acceptable, certain types of trap repairs may be performed with the trap installed. More often, though, it will be cost effective to replace the trap immediately and perform the overhaul in the shop.

7.19 Shop Testing of Steam Traps. Repaired, rebuilt, and if practical, even new traps should be steam tested before being installed. A test stand similar to that shown in Figure 113 is recommended for activities having a sufficient inventory of traps to warrant shop testing. The test stand should meet the following:

a) The test stand height should make connection of pipes easy and the sink should be deep enough to contain splashes.
b) The test stand steam supply should provide the different pressures in the activity's steam system. The water supply pressure must be 10 percent higher than the test steam pressure.
c) A pressure gage and bimetallic dial thermometer are part of the setup.
d) The open discharge from the test trap faces down in the sink.

Steps to be taken in conducting the baseline survey are as follows:

	Strainer damaged or deteriorated. Leaking gasket. Inlet or outlet plugged.
Thermostatic	Bellows distorted, cracked. Dirt clogged in bellows. Bimetallic element. Improper element setting. Element failed or closed.
Float or Float and Thermostatic	Float leaking or collapsed. Linkage worn or damaged. Leaking internal seals/gasket. Float not operating freely. For thermal element in F&T see above.
Inverted Bucket	Bucket cracked, not holding water seal. Trap body clogged with dirt. Mismatch or valve and valve seat. Linkage worn or damaged. Bucket vent plugged. Leaking internal seals.
Thermodynamic - disk - impulse - orifice	Disk worn, distorted, rusty wire drawn. Seat worn, wire drawn. Bonnet worn or damaged. Orifices worn. Worn control cylinder or valve plug. Leaning internal seals.

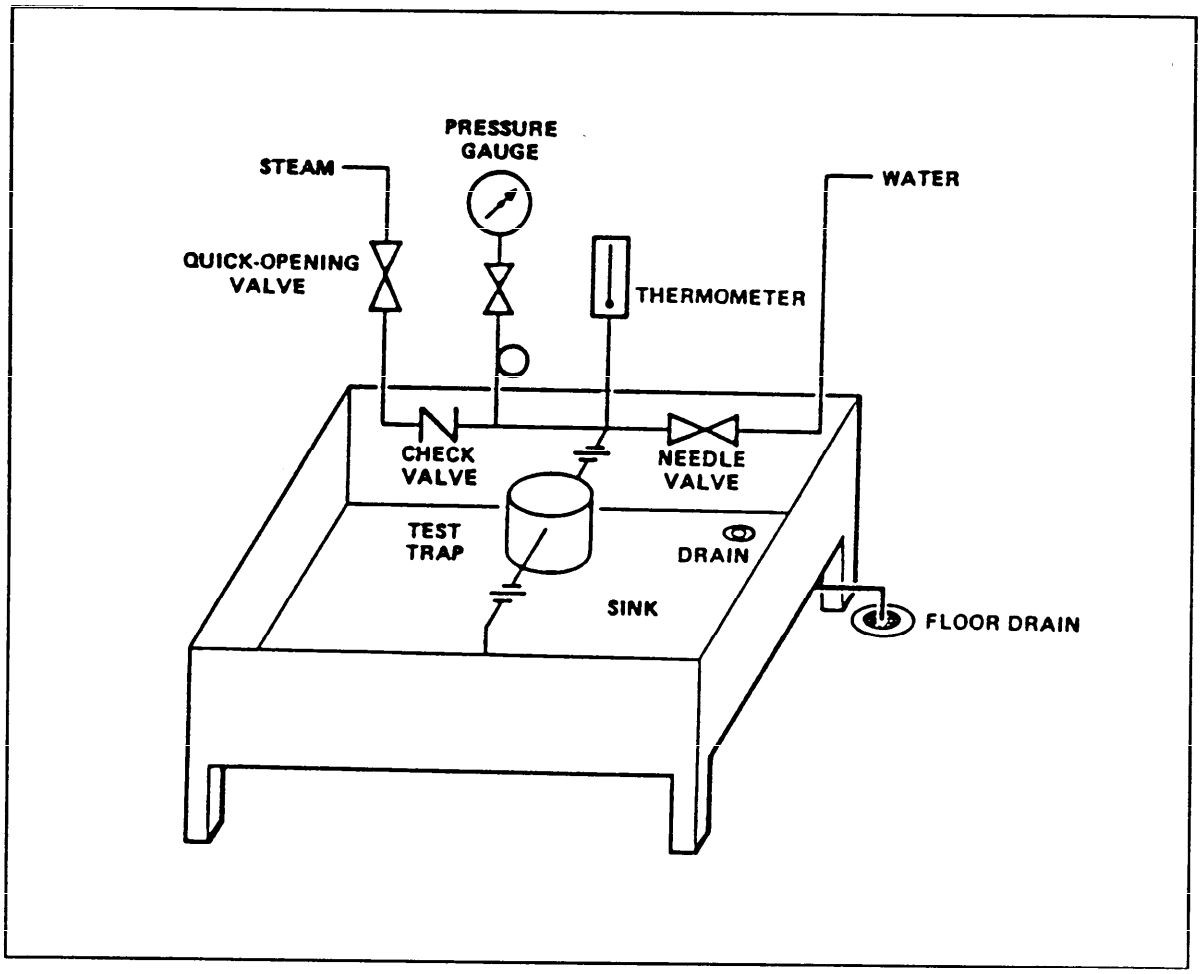

Figure 113
Steam Trap Shop Test Stand

Section 7: SELF-STUDY QUESTIONS

Q7-1 What are the major classifications of steam traps?

Q7-2 What are the basic variations within mechanical traps?

Q7-3 What are the basic variations within thermostatic traps?

Q7-4 What are the basic variations within thermodynamic traps?

Q7-5 List the major considerations in selecting steam traps?

Q7-6 What is the usual safety factor range?

Q7-7 List the basic methods of steam trap inspection.

Section 8: HEAT PUMPS

8.1 Objective. The objective of this section is to describe the features of heat pumps which make them an attractive method of heating in specific applications.

8.2 Heat Pumps Versus Electric Heat. The heat pump is an air conditioning system which operates as a heating system. It is sometimes called a reverse cycle system. It is a very efficient system to use when electrical energy must be used for heating. It can make operating costs comparable to those obtained when gas or fuel oil are used.

In order to understand why a heat pump is an attractive system, we must compare it to the alternative--electric resistance heat. Figure 114 shows an electric resistance heater. Regardless of the type of heater, the voltage, the size, or any other factor, this heater will convert the energy in 1 kilowatt of electricity into 3,414 Btu/hr. Those people who sell electric resistance heat may be quick to point out that it is 100 percent efficient. This is true, in that 100 percent of the electricity purchased is converted into heat. However, the rest of the story is that heat energy in the form of electricity is more expensive per Btu as heat purchased in the form of natural gas or fuel oil.

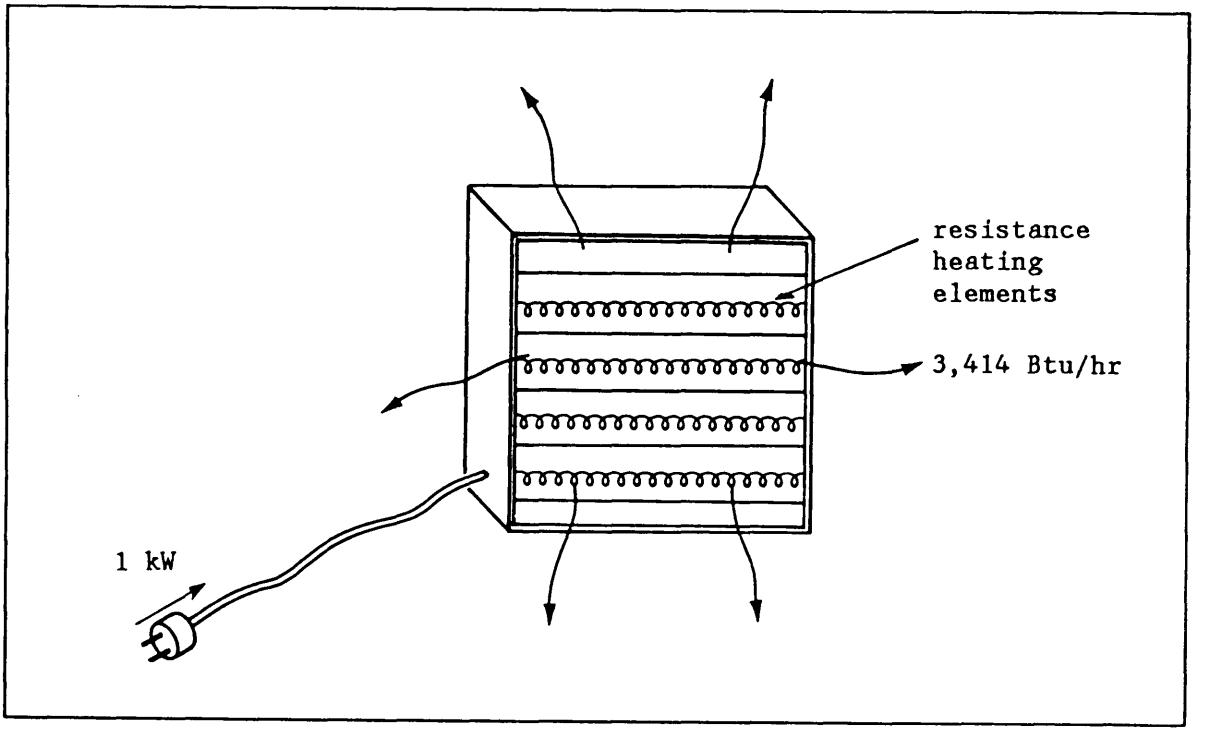

Figure 114
An Electric Resistance Heater Converts 1 kW of Electricity to 3,414 Btu/hr of Heat

Let's see how a heat pump can cut the cost of electric heating. Consider a one-ton window air conditioner as shown in Figure 115. It moves 12,000 Btu/hr from the room, into the refrigerant. The compressor input is 1 kW, so another 3,414 Btu/hr is added to the refrigerant. The total of 15,414 Btu/hr is rejected in the condenser to outside. If we were to turn the air conditioner around in the window, the outside air would be cooled, and 15,414 Btu/hr would be rejected to the room! This represents more than a five-fold increase in the heating available from the same 1-kW input.

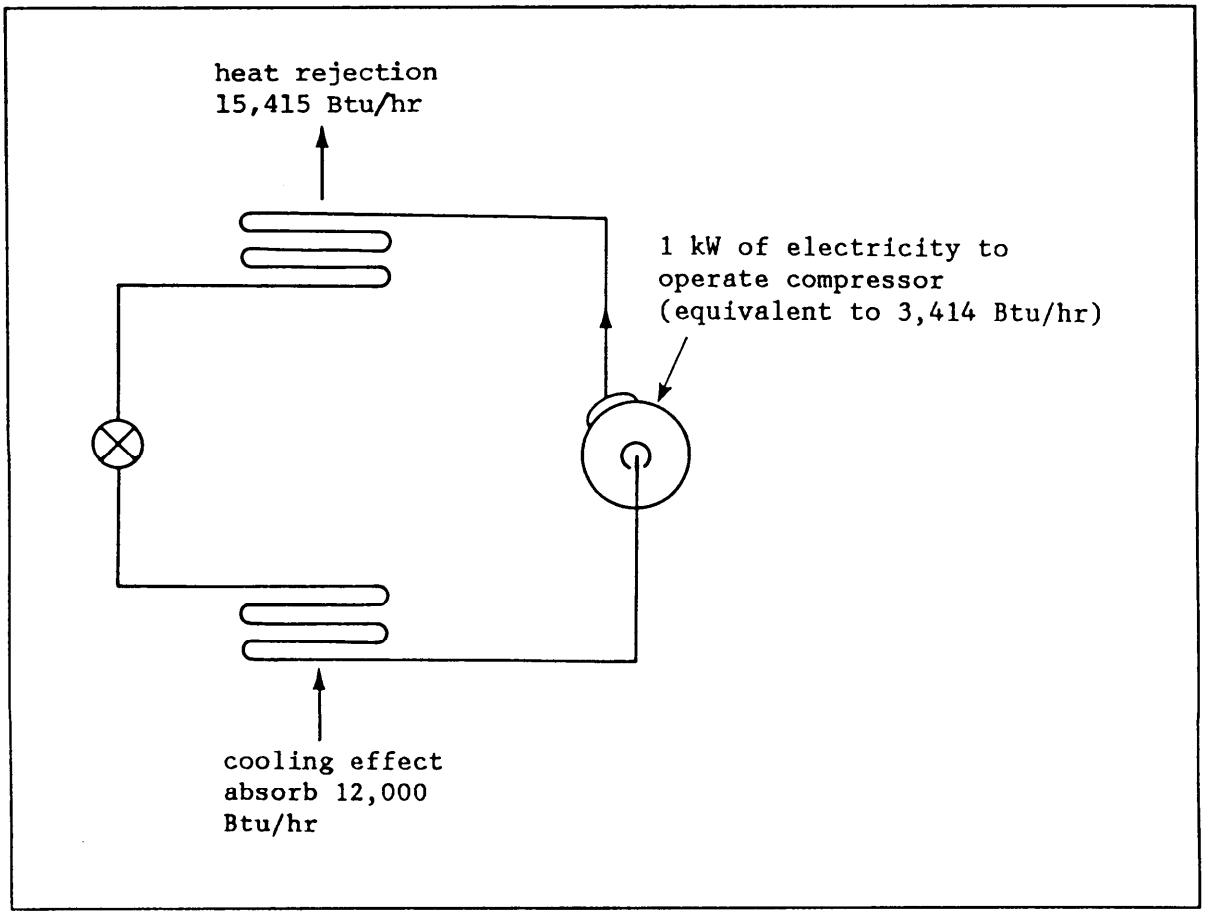

Figure 115
The Heat Pump Moves 15,414 Btu/hr From the Outside Air
Into the Heated Space for a Cost of 1 kW

8.3 Heat Pump Components. In practice, we do not rearrange the refrigeration components each time we want to operate the system as a heater. Instead, we use a four-way reversing valve. For normal air conditioning, the hot gas from the compressor discharge is routed to the outdoor coil, then to the metering device, indoor coil and compressor suction via the four-way valve (Figure 116). On the heating cycle, the four-way valve changes its position.

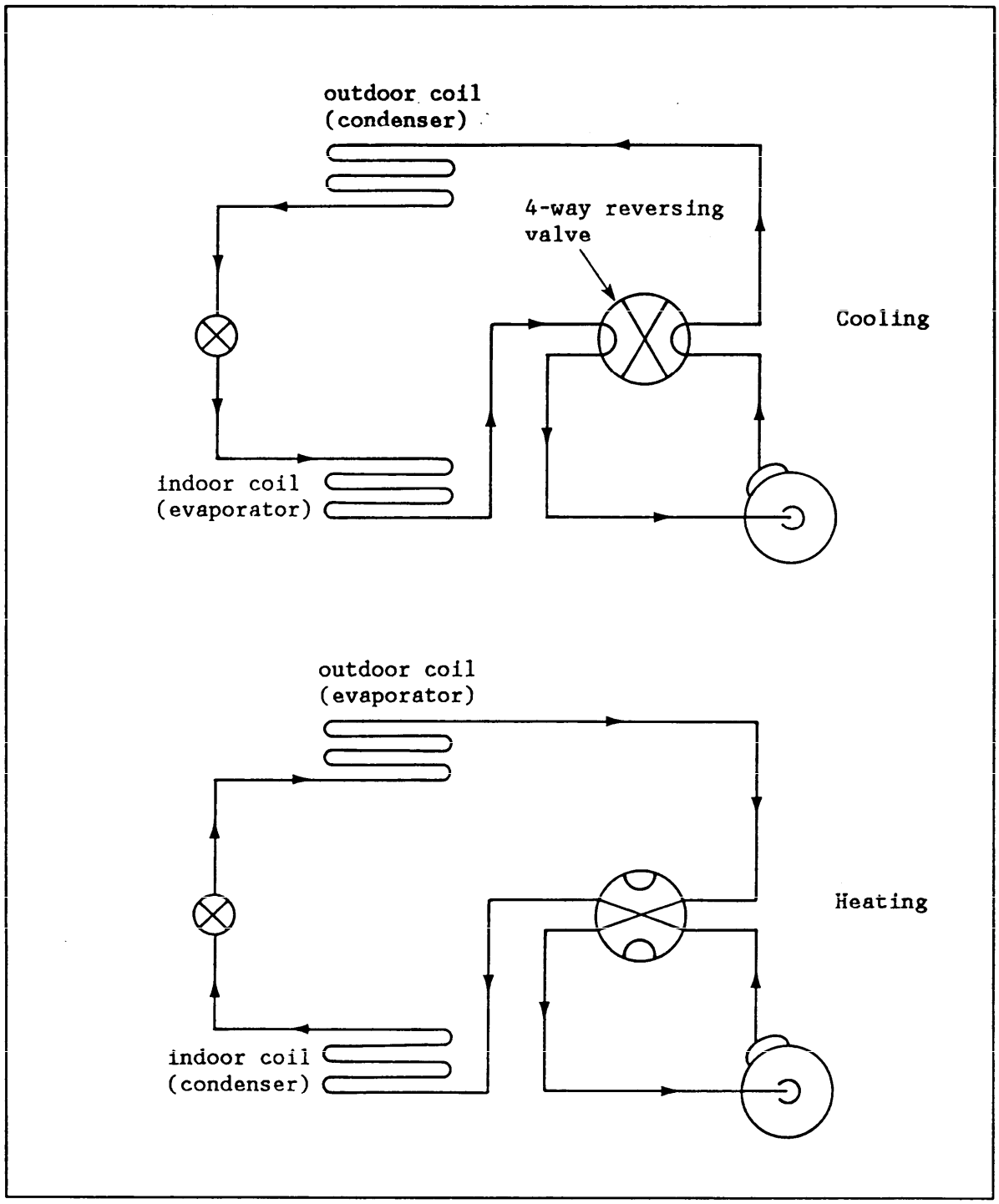

Figure 116
Refrigerant Piping for a Heat Pump

The hot gas from the compressor discharge is routed backwards through the indoor coil, metering device, outdoor coil (where it picks up heat from the outdoor air), and back to the compressor suction via the four-way valve. A capillary tube is a handy metering device for this type of system, as it permits flow in either direction. Where thermostatic valves are used as the metering devices, one is provided for each coil, and a bypass with a check valve is provided around each thermostatic expansion valve (TXV) (see Figure 117).

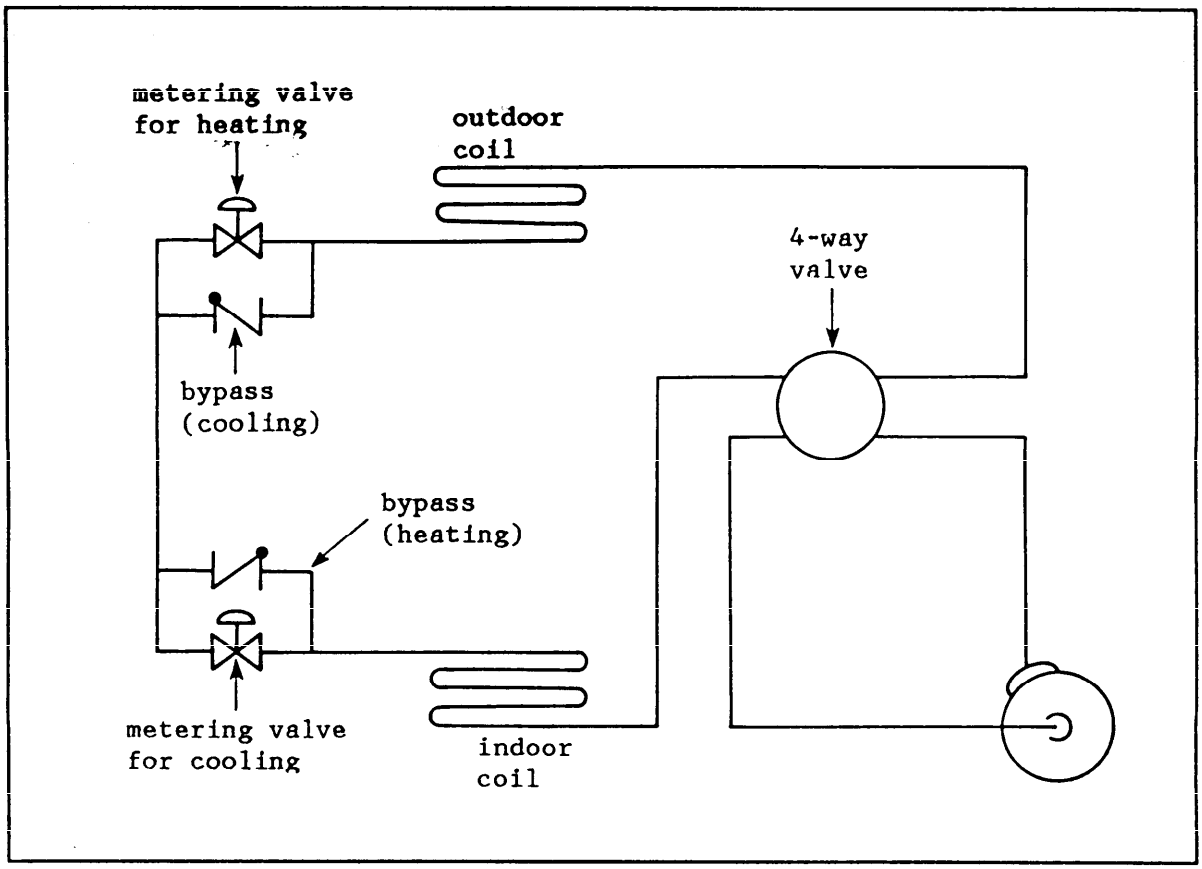

Figure 117
Bypasses Around Thermostatic Expansion Valves

8.4 Four-Way Reversing Valve. The detail of the four-way valve operation is shown in Figure 118. The solenoid valve operates to release pressure from one end of the barrel or the other. With the unbalanced pressures, the cylinder inside the valve body will move towards the end which has had the pressure bled off. The normal setup is for the thermostat to energize the solenoid valve to call for heating. In the de-energized position, the valve will operate in the cooling position.

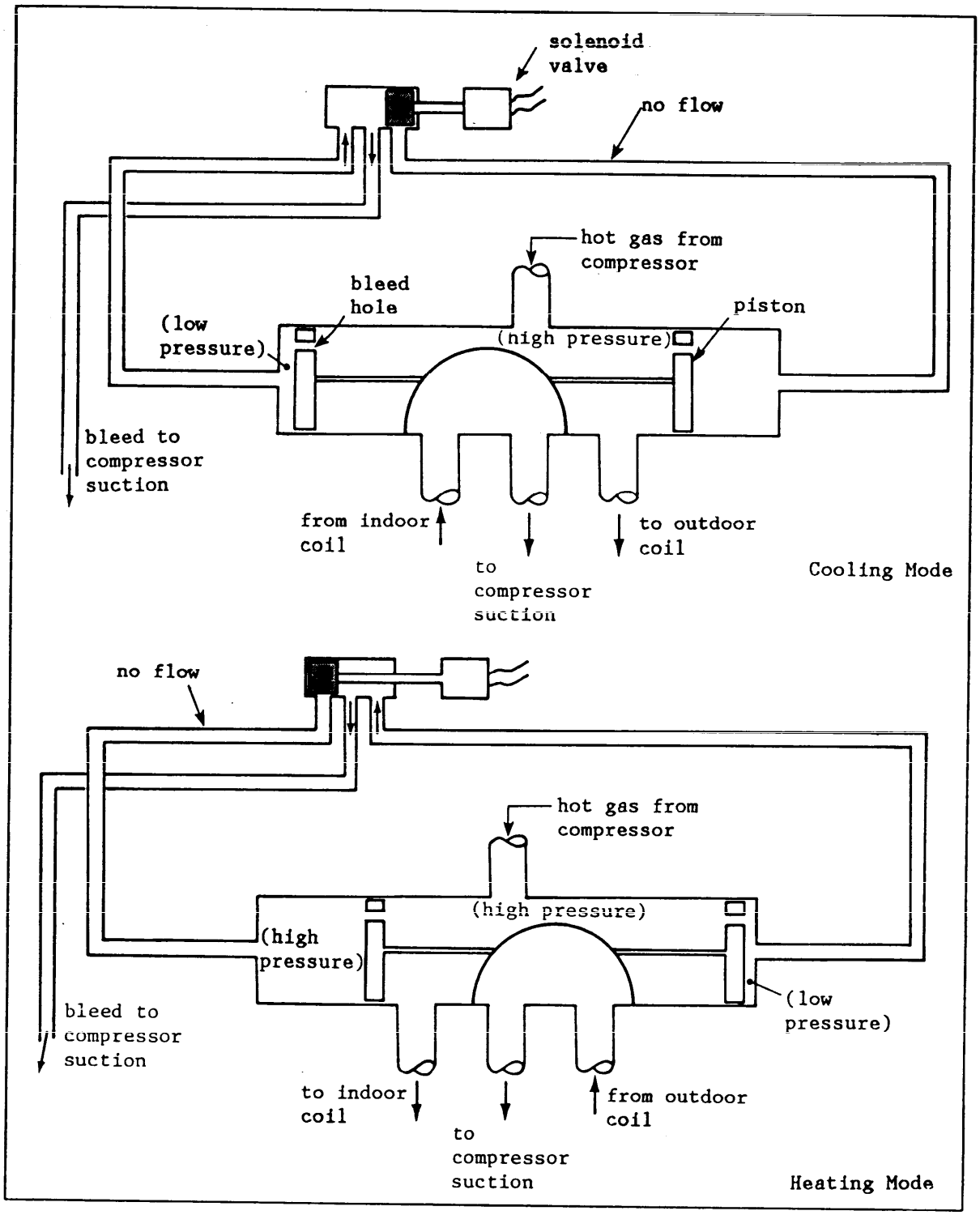

Figure 118
Four-Way Reversing Drive

8.5 Effect of Outside Temperature. As outside temperatures get lower, the heating output of the heat pump also drops. Heat pump systems are provided with auxiliary electric heaters which come on only when the heat pump cannot meet the demand for heat.

The system described above is called an air-to-air heat pump. The same principle may also be used to have heat pumps transfer heat from air to water, water to air, and water to water.

Section 8: SELF-STUDY QUESTIONS

Q8-1 What is a Heat Pump?

Q8-2 How does one account for the effect of outside temperature?

Section 9: HEATING SYSTEMS MAINTENANCE PROCEDURES

9.1 Motors and Drives. Motors are most commonly used in heating systems to drive the fans which circulate room air through a heating element or heat exchanger. They may be permanently lubricated, or they may require periodic lubrication. Where oiling ports are provided, use a few drops of SAE 10 oil annually. When motors are replaced, it is important that the replacement motor be positioned so that the oiling ports are located near the top of the motor so that the oil can run down to the bearings.

Motors should be checked for cleanliness annually. Remove any dirt and grease from the outside of the motor. If open type motors have been allowed to operate without filters for some period of time, it may be necessary to blow out the insides of the motor using compressed air through the ventilation holes.

Where the motor drives a fan through the use of a belt, the belt should be inspected regularly for wear. Signs which call for belt replacement include a glazed appearance on the sides or cracks in the inside surface of the belt. When replacing a belt which has worn out, check the alignment of the motor sheave with the fan sheave. The grooves of each sheave should be parallel and in alignment with each other.

All belts will stretch after a short period of operation, and should be periodically checked for belt tension. The belts are under proper tension when finger pressure can move the belt approximately 1/2 inch from the straight linge of the belt between the sheaves. In most models, the belts can be easily tensioned by raising or lowering the motor base at the adjusting screws.

9.2 Filters. Filters are provided to remove particulates from the room air which circulates through heat exchangers or heating coils. They may be of the washable type or the disposable type. Washable filters may be removed from the unit and cleaned with a garden hose. Spray the filter from the leaving air side so that the dust will be driven off in a direction backwards from the direction it was deposited.

Disposable filters are merely discarded when dirty, and replaced with a new filter of identical size.

Frequency of filter changing is entirely a function of the cleanliness of the air, the number of hours of operation, and the amount of outside air being introduced into the system. Filter changing frequency may be as much as once a month, or as little as twice per year, depending upon the application. A schedule should be set up for each heating unit. Initially, the filter condition should be inspected monthly, but not changed unless required. In this way, the required filter changing frequency may be determined for each individual heater.

9.3 Gas Burners. Regular maintenance of gas burners consists of removal of the burner from the furnace, and removing accumulated scale with a wire brush. The burners may be removed by first removing the gas manifold. The burners may then be easily slid out of the heat exchanger.

For ribbon type burners, or for burners which have slotted crossover slots, a tool fashioned from a scrap of sheet metal may be used for cleaning.

Burners should be observed after cleaning to make sure that the burning is taking place uniformly across all the burner openings, and that there are no obstructions.

9.4 Cleaning of Heat Exchangers. With properly adjusted combustion, cleaning of the heat exchanger surfaces is normally not required. In the event of soot or excessive scale accumulation, the heat exchanger may be cleaned by first making a tool consisting of a light chain attached to the end of a rod. The chain may be dropped down the flue gas side of the heat exchanger by inserting the rod into the draft diverter or the flue gas outlet. The chain may then be pulled up and down vigorously, cleaning accumulations of soot or scale from the heat exchanger. The debris will fall into the burner section where it may be easily removed.

9.5 Pilot Burner Orifices. The orifice in the pilot burner for gas fired furnaces is quite small and susceptible to clogging. If a small pilot flame indicates a restricted orifice, the orifice may be removed from the burner. Sometimes tapping the orifice will dislodge a blockage. A fine wire may also be used, or the orifice may be replaced.

9.6 Checking Draft. Draft should be checked as part of normal regular maintenance to ensure safe operation, with no spillage of the products of combustion. A match may be used around the draft diverter while the furnace is operating to make sure that dilution air is being induced at all points around the diverter. If any reverse drafts are noted, the flue stack must be inspected for blockage.

The condition of the flue stack should be inspected for evidence of corrosion. Suspicious sections should be replaced.

9.7 Controls. In the absence of complaints about the operation of a heater, it may be assumed that the operating controls are functioning normally. Only the safety controls (which are not normally called upon to operate) need to be checked.

The high limit switch may be checked by creating a high limit condition. Disconnect the wiring to the fan motor, and allow the thermostat to call for heat. The burner should come on, and then cycle off on high limit within a minute or two. A small hole may be drilled next to the high limit sensing

element to allow checking the set point with a dial thermometer (DO NOT drill a hole through the heat exchanger). The limit should open at a temperature between 180 and 200 degrees F.

The pilot safety device on a gas furnace is easily checked by either blowing out the pilot or turning off the gas. For thermocouple systems, you should hear the pilot gas valve close within 1-1/2 to 2 minutes.

For oil fired systems, the cad cell may be checked by blocking the line of sight of the cell. With the furnace firing, remove the cad cell from its mount and cover the eye with your hand. The flame should shut down almost immediately.

Section 9: SELF-STUDY QUESTIONS

Q9-1 The drive belts are under proper tension when finger pressure can move the belt approximately 1/2 inch from the straight line of the belt across the sheaves.

( ) True ( ) False

Q9-2 After initial start-up, the filter condition should be inspected monthly but not changed unless required. In this way, the required filter changing frequency may be determined.

( ) True ( ) False

Q9-3 Only the safety controls need to be checked in the absence of complaints about the operation of a heater.

( ) True ( ) False

APPENDIX A

PREVENTIVE MAINTENANCE AND INSPECTION SCHEDULE

WARM AIR FURNACES

No.	Check Points	Frequency				
		D	W	M	Q	A
1.	Observe condition of flame. Correct if flame is smokey or if burner starts with puff or rollout. Flame should not impinge on furnace heat exchanger walls.		X			
2.	Check fuel supply (oil). Note level of oil in tank. Leaking tanks must be repaired or replaced.		X			
3.	Test flame detection devices, including primary control and associated fuel cut-off valves. Loss of flame should shut off flow of fuel to the burners. Replace or repair if device or valves are found defective.		X			
4.	Inspect fuel supply systems and piping. Repair or replace as needed. Replace cartridges for in-line filters. Adjust oil pressure to approximately 100 psig or as prescribed by the manufacturer. Ensure both oil supply and return lines have fusible in-line valves.			X		
5.	Inspect burner assembly. Evidence of improper fuel nozzle wear or plugging or carbon buildup on nozzle is cause for replacement. Adjust equipment for proper combustion after replacing old nozzle with new one.			X		
6.	Inspect burner assembly. Replace nozzle and filters on oil burning equipment. Clean, check and adjust electrodes.			X		
7.	Check electronic ignition on gas-fired equipment. Clean and adjust electrodes.			X		

APPENDIX A (Continued)

WARM AIR FURNACES

No.	Check Points	Frequency				
		D	W	M	Q	A
8.	Internal and external inspection of heating surfaces after cleaning. Fireside surfaces should be free of soot. Cracked surfaces will require repair or replacement of the furnace (firing chamber). Repair of pressure parts requires a certified welder. Evidence of bulges, bulges, blisters or other deformities indicates defective controls and safety devices or improperly sized or adjusted burner.			X		
9.	Inspect gas piping, valves and regulator for proper support and tightness. Test for tightness with a soap solution, never a flame. If a leak is detected, then secure piping to the boiler and contact the gas company.			X		
10.	Check transformer. Do not interchange transformers of different capacities when replacing defective transformers.			X		
11.	Inspect area around furnace for cleanliness, combustibles, etc. Remove trash and combustibles from boiler room.		X			
12.	Ensure adequate ventilation to the boiler (1 square inch per 1,000 Btu). Lighting should be adequate to read nameplates and gauges.					X
13.	Check draft and combustion. Conduct combustion efficiency test and adjust burner for efficient and safe operation. Combustion measurements required are for percent of carbon monoxide, carbon dioxide, oxygen and stack temperature and boiler room temperature. No smoke or carbon monoxide should be evident. Overfire draft should be at least 0.02 inch water gauge (W.G.) for oil burners. Adjust manifold pressure to 3.5 inches W.G. for natural gas and 11 inches W.G. for LP gas (a mixture of propane and butane).					X

APPENDIX A (Continued)

WARM AIR FURNACES

No.	Check Points	Frequency				
		D	W	M	Q	A
14.	Inspect control equipment for proper functioning. Covers on controllers should be in place. Dust and dirt on control equipment must be removed. Electrical contacts that are fouled require cleaning. All wiring should be properly grounded.					X
15.	Calibrate and check operation of gauges and meters. Repair or replace all defective gauges and meters. Defects include cracked, broken or dirty glass, illegible markings or bent pointers. Place date and initials of tester on the gauge.					X
16.	Check flue for integrity and tightness. Flue should be firmly attached to the furnace. The flue should be properly supported and either vertical or sloped upward.					X
17.	On electric furnaces, check electrical wiring and connections. Connections that are fouled should be cleaned.			X		
18.	Check thermostat operation, replace defective thermostats, check anticipator setting. It should match amperage rating of gas valve.				X	

APPENDIX A (Continued)

HOT WATER BOILERS (350,000 Btu/h or less)

No.	Check Points	Frequency				
		D	W	M	Q	A
1.	Observe condition of flame. Correct if flame is smokey or if burner starts with puff. Flame should not impinge on furnace walls.		X			
2.	Check fuel supply (oil). Note level of oil in tank. Leaking tanks must be repaired or replaced.		X			
3.	Observe operation of circulating pumps. Lubricate pump motor, bearing assembly and flex coupling. Noisy pump motors and leaking pumps require repair or replacement.		X			
4.	Test flame detection devices and associated automatic fuel cut-off valves. Loss of flame should shut off flow of fuel to the burners. Replace or repair if device or valves are found defective.			X		
5.	Inspect fuel supply systems and piping in boiler for leaks, loss of insulation, etc. Repair or replace as needed. Replace cartridges for in-line filters. Adjust oil pressure to approximately 100 psig or as prescribed by the manufacturer. Ensure both oil supply and return lines have fusible in-line valves.			X		
6.	Check boiler room drains for proper functioning.			X		
7.	Check condition of safety relief valves. Test valve with try lever. Valves should preferably be the pressure and temperature type. Leaking safety valves must be replaced. No obstructions such as another valve, long pipe length, or constriction is permissible between the boiler and the safety relief valve. The overflow from the valve should be free of obstructions and piped to within 4 inches of floor or to a floor drain.			X		

APPENDIX A (Continued)

HOT WATER BOILERS (350,000 Btu/h or less)

No.	Check Points	Frequency				
		D	W	M	Q	A
8.	Inspect burner assembly. Evidence of improper fuel nozzle wear or plugging or carbon buildup on nozzle is cause for replacement. Adjust equipment for proper combustion after replacing old nozzle with new one.			X		
9.	Inspect burner assembly. Replace nozzle and filters on oil burning equipment. Clean, check and adjust electrodes.					X
10.	Internal and external inspection of heating surfaces after cleaning. Fireside surfaces should be free of soot. Cracked surfaces will require repair or replacement of the furnace (firing chamber). Repair to pressure parts requires a certified welder. Evidence of bulges or other deformities indicates defective controls and safety devices or improperly sized or adjusted burner.					X
11.	Inspect gas piping, valves and regulator for proper support and tightness. Test for tightness with a soap solution, never a flame. If a leak is detected, then secure piping to the boiler and contact the gas company.					X
12.	Check transformer. Do not interchange transformers of different capacities when replacing defective transformers.			X		
13.	Inspect area around boiler for cleanliness, combustibles, etc. Remove trash and combustibles from boiler room.		X			
14.	Ensure adequate ventilation to the boiler (1 square inch per 1,000 Btu). Lighting should be adequate to read nameplates and gauges.					X
15.	Inspect hot water supply and return piping and valves, dual control unit for leaks, excessive rust, and damaged or lack of insulation. Repair or replace as needed.					X

APPENDIX A (Continued)

HOT WATER BOILERS (350,000 Btu/h or less)

No.	Check Points	Frequency				
		D	W	M	Q	A
16.	Check draft and combustion. Conduct combustion efficiency test and adjust burner for efficient and safe operation. Combustion measurements required are for percent of carbon monoxide, carbon dioxide and oxygen and stack temperature and boiler room temperature. No smoke or carbon monoxide should be evident. Overfire draft should be at least 0.02 inch water gauge (W.G.) for oil burners. Adjust manifold pressure to 3.5 inches W.G. for natural gas and 11 inches W.G. for LP gas (a mixture of propane and butane).					X
17.	Check expansion tank and air eliminator equipment for leaks, corrosion, etc. Repair or replace defective equipment.					X
18.	Inspect control equipment for proper functioning. Covers on controllers should be in place. Dust and dirt on control equipment must be removed. Electrical contacts that are fouled require cleaning. All wiring should be properly grounded.					X
19.	Calibrate and check operation of gauges and meters. Repair or replace all defective gauges and meters. Defects include cracked, broken or dirty glass, illegible markings and bent pointers. Place date and initials of tester on the gauge.					X
20.	Check breeching and stack for integrity and tightness. Breeching and stack should be firmly attached to the boiler in forced draft systems. The breeching, flue and stack should be properly supported and either vertical or sloped upward.					X
21.	Check shell for cleanliness, excessive rust, corrosion streaks, deformations and cracks. Clean and repair. Repaint to cover bare metal. Ensure access access doors are in place and in working order.					X

APPENDIX A (Continued)

STEAM BOILERS (350,000 Btu/h or less)

No.	Check Points	Frequency				
		D	W	M	Q	A
1.	Observe condition of flame. Correct if flame is smokey or if burner starts with puff. Flame should not impinge on furnace walls.		X			
2.	Test low water fuel cutoffs for proper sequencing and operation. Blow down boiler.		X			
3.	Check fuel supply (oil). Note level of oil in tank. Leaking tanks must be repaired or replaced		X			
4.	Test water column or gauge glass. Glass must be clean and free of obstructions. Clean dirty glass and replace defective column or glass at once. Defects include leaking gauge cocks and glass, excessive corrosion and improper operation.		X			
5.	Observe operation of condensate or vacuum pumps. Replace or repair defective or leaking pumps.		X			
6.	Check operation of chemical feed pots and feed pumps. Repair or replace defective equipment.		X			
7.	Test flame detection devices and associated automatic fuel cutoff valves. Loss of flame should shut off flow of fuel to the burners. Replace or repair if device or valves are found defective.			X		
8.	Inspect steam supply and condensate return piping, valves, radiators and traps for leaks, excessive rust and damaged or lack of insulation. Blow down strainers. Repair or replace individual items as needed.			X		

APPENDIX A (Continued)

STEAM BOILERS (350,000 Btu/h or less)

No.	Check Points	Frequency				
		D	W	M	Q	A
9.	Inspect fuel supply systems and piping in boiler for leaks, loss of insulation, etc. Repair or replace as needed. Replace cartridges for in-line filters. Adjust oil pressure to approximately 100 psig or as prescribed by the manufacturer. Ensure both oil supply and return lines have a fusible in-line valve.			X		
10.	Check condition of safety valves. Test valve with try lever. Valves should preferably be the pressure and temperature type. Leaking safety valves must be replaced. No obstructions such as another valve, long pipe length, or constriction is permissible between the boiler and the safety valve. The overflow from the valve should be free of obstructions and piped to within 4 inches of floor or to a floor drain.			X		
11.	Check boiler room drains for proper functioning.			X		
12.	Inspect burner assembly. Evidence of improper fuel nozzle is cause for replacement. Adjust equipment for proper combustion after replacing old nozzle with new one.			X		
13.	Inspect burner assembly. Replace nozzle and filters on oil burning equipment. Clean, check and adjust electrodes.					X
14.	Internal and external inspection of heating surfaces after cleaning. Fireside surfaces should be free of soot. Cracked surfaces will require repair or replacement of the furnace (firing chamber). Repair of pressure parts requires a certified welder. Evidence of bulges or other deformities indicates defective controls and safety devices or improperly sized or adjusted burner. Consult boiler water treatment specialist if there is evidence of hard scale on the water side surfaces.					X

APPENDIX A (Continued)

STEAM BOILERS (350,000 Btu/h or less)

No.	Check Points	Frequency				
		D	W	M	Q	A
15.	Inspect gas piping, valves and regulator for proper support and tightness. Test for tightness with a soap solution, never a flame. If a leak is detected, then secure piping to the boiler and contact the gas company.					X
16.	Check transformer. Do not interchange transformers of different capacities when replacing defective transformers.					X
17.	Inspect area around boiler for cleanliness, combustibles, etc. Remove trash and combustibles from boiler room.		X			
18.	Ensure adequate ventilation to the boiler.					X
19.	Check draft, manifold pressure and combustion. Conduct combustion efficiency test and adjust burner for efficient safe operation. Combustion measurements required are for percent of carbon monoxide, carbon dioxide, oxygen and stack temperature and boiler room temperature. No smoke or carbon monoxide should be evident. Overfire draft should be at least 0.02 inch water gauge (W.G.) for oil burners. Adjust manifold pressure to 3.5 inches W.G. for natural gas and 11 inches W.G. for LP gas (a mixture of propane and butane) or to manufacturers' recommended pressure.					X
20.	Inspect control equipment for proper sequence and operation. Covers on controllers should be in place. Dust and dirt on control equipment must be removed. Electrical contacts that are fouled require cleaning. All wiring should be properly grounded.					X

APPENDIX A (Continued)

STEAM BOILERS (350,000 Btu/h or less)

No.	Check Points	Frequency				
		D	W	M	Q	A
21.	Calibrate and check operation of gauges and meters. Repair or replace all defective gauges and meters. Defects include cracked, broken or dirty glass, illegible markings and bent pointers. Place date and initials of tester on the calibrated gauges.					X
22.	Check breaching and stack for integrity and tightness. Breeching and stack should be firmly attached to the boiler in forced draft systems. The breeching and stack should be properly supported and either vertical or sloped upward.					X
23.	Check shell for cleanliness, excessive rust, corrosion streaks, deformations and cracks. Clean and repair. Repaint to cover bare metal. Assure access doors are in place and in working order.					X

APPENDIX A (Continued)

HEAT PUMPS

Compressors

No.	Check Points	Frequency				
		D	W	M	Q	A
1.	Check compressor for liquid pumping by taking the discharge temperature.			X		
2.	Inspect the compressor and shaft seals for evidence of gasket or seal failure. Replace defective gaskets or seals.			X		
3.	Stop compressor and inspect level and condition of crankcase oil. Refill or replace oil when necessary. If the compressor has force-feed lubrication, check the oil pump pressure gauge.			X		
4.	Inspect compressor motors for cleanliness, proper operation, and lubrication. When necessary, clean motor housing and lubricate motor bearings.			X		
5.	Inspect compressor drives for pulley alignment, belt tension, and condition of belts. Replace defective belts.			X		
6.	Test for leaking compressor discharge and suction valves. Repair leaky valves.				X	
7.	Disassemble compressor if necessary; clean and repair parts. Replace defective parts. Re-grind suction and discharge valves. Change oil.					X

specified mesh when subjected to a prescribed sampling and

APPENDIX A (Continued)

HEAT PUMPS

Coils

No.	Check Points	Frequency				
		D	W	M	Q	A
1.	Inspect for frost accumulation and defrost if necessary.		X			
2.	Check for noncondensable gases.			X		
3.	Clean coils, fins, and tubes of air-cooled condenser.				X	
4.	Check fan on air-cooled condenser for obstructions.				X	
5.	Drain water from water-source systems. Clean to remove scale. Paint clean exterior surfaces with asphalt varnish to prevent rust forming on metal surfaces. Replace worn or defective parts.					X

ACCESSORIES

Receivers

No.	Check Points	Frequency				
		D	W	M	Q	A
1.	Check level of refrigerant charge. Replenish charge when necessary.			X		
2.	Check safety pressure-relief valve or fusible safety plug to ensure that it is present and not damaged.			X		

APPENDIX A (Continued)

ACCESSORIES

Oil Traps and Separators

No.	Check Points	Frequency				
		D	W	M	Q	A
1.	Inspect operation of float valve. Clean float assembly and adjust float valve needle when necessary.				X	
2.	Dismantle and clean interior and exterior. Renew gaskets and replace worn or defective parts.					X

Solenoid Valves

No.	Check Points	Frequency				
		D	W	M	Q	A
1.	Inspect solenoid valves for proper operation and for positive action.			X		
2.	Disassemble, clean, and lubricate. Replace packing rings and valve disks or buttons when necessary.					X

Pressure Gauges

No.	Check Points	Frequency				
		D	W	M	Q	A
1.	Inspect pressure gauges for cracked or broken covers, insecure mounting, and defective operation. Replace damaged or defective gauges.			X		
2.	Remove pressure gauges and test their accuracy.					X

APPENDIX A (Continued)

ACCESSORIES

Thermostats

No.	Check Points	Frequency				
		D	W	M	Q	A
1.	Inspect thermostats for setting and for proper operation.			X		

Refrigerant Valves

No.	Check Points	Frequency				
		D	W	M	Q	A
1.	Check refrigerant valves for leaks. Correct defective conditions. Lubricate packing when necessary.			X		

Other Accessories

No.	Check Points	Frequency				
		D	W	M	Q	A
1.	Clean or renew filters.			X		
2.	Clean spray humidifier to remove water solids and scale.			X		
3.	Check fan and motor bearings for adequate lubrication. Add grease or oil when necessary. Follow manufacturer's recommendations.				X	
4.	Clean unit with vacuum cleaner to collect dust and dirt.				X	

APPENDIX A (Continued)

ACCESSORIES

Other Accessories

No.	Check Points	Frequency				
		D	W	M	Q	A
5.	Check the temperature and relative humidity in each air conditioned space with a sling psychrometer or recorder that measures temperature and relative humidity.			X		
6.	Check refrigerant piping for leaks and for proper support. Repair defective conditions.				X	
7.	Check operation of reversing valve. Repair or replace if defective.					X

APPENDIX B

ANSWERS TO SELF-STUDY QUESTIONS

SECTION 1. GENERAL

Q1-1	(a)	Q1-5	(b)	Q1-9	(d)	Q1-13	(d)
Q1-2	(c)	Q1-6	(d)	Q1-10	(a)	Q1-14	(a)
Q1-3	(b)	Q1-7	(a)	Q1-11	(a)	Q1-15	(c)
Q1-4	(a)	Q1-8	(d)	Q1-12	(a)	Q1-16	(c)

SECTION 2. RESIDENTIAL AND COMMERCIAL GAS FIRED FURNACES

Q2-1 Two important differences between the properties of natural gas and propane are:

(a) Heating Value:
Propane - 2,550 Btu/cubic foot
Natural Gas - 1,000 Btu/cubic foot

(b) Propane is heavier than air, natural gas is lighter than air.

Q2-2 125,000 Btu/hr/1,000 Btu/cubic foot = 125 cubic feet/hr

Q2-3 The delivery pressure for natural gas burners is 3.5 inches W.C.

Q2-4 The delivery pressure for propane burners is 11 inches W.C.

Q2-5 The extra amount of air that is theoretically required for the combustion reaction is called excess air.

Q2-6 Too much excess air reduces combustion efficiency. Not enough excess air caused incomplete combustion producing carbon monoxide.

Q2-7 Primary Air - The air initially mixed with the fuel to obtain rapid ignition and to act as a conveyor of fuel. This air is drawn from the atmosphere by the venturi effect of fuel gas feeding to an atmosphere gas burner.
Secondary Air - The air drawn from surrounding area near the flame.

Q2-8 Each of the propane burners is rated at 120,000/4 = 30,000 Btu/ft.

Q2-9 From Table 1, the orifice size for propane should be a number 52. If natural gas is used, the same Btu rating will be obtained using a number 36 orifice.

Q2-10 Soot formation on heat exchanger is caused by insufficient primary air.

Q2-11 Flashback - On light-off of a burner when the velocity of the gas and primary air is too low to keep the flame outside the burner head. The flame flashes back into the mixing chamber and burns at the gas orifice. This is called Flashback.

Likely causes of flashback:
(a) a low pressure in the main gas supply (common); and
(b) too much primary air, obstructed burner orifice, or obstructed main burner (less common).

Q2-12 Three devices used to sense standing pilot flame:
(1) thermocouple,
(2) bimetal type pilot safety,
(3) low gas pressure cutout.

Q2-13 Problem with copper piping to the pilot burner:
Scaling of the gas line causing orifice blockage.

Q2-14 Combination gas valve functions as:
(1) pressure regulator,
(2) a pilot safety valve,
(3) a main gas valve (manual over-ride of pilot gas).

Q2-15 Timed start fan switch - fan switch uses a fixed-time delay. Used in application of all the downflow and horizontal furnaces, and some upflow furnaces.

Q2-16 Sequence of operation for an electronic ignition system: answer is provided in paragraph 2.14.

Q2-17 Condensing furnace: Furnace with an auxiliary heat exchanger to cool the flue gas to 100 degrees F by the 72 degree F air returning to the furnace. Major advantage - higher overall heating efficiency.

SECTION 3. RESIDENTIAL AND COMMERCIAL OIL-FIRED FURNACES

Q3-1 Preheat is used to reduce the fuel viscosity for ease of pumping.

Q3-2 The motor drives a fan to draw the combustion air and a fuel pump to draw the fuel to the burner.

Q3-3 Atomized oil is ignited by a pair of electrodes (power by 10,000 volts or more).

Q3-4 The ignition transformer is a step-up transformer, using 115V as the input voltage to produce the 10,000 secondary voltage for the electrodes.

Q3-5 The average oil pump discharge pressure is:
(1) 300 - 600 psi - for uniflow type or
(2) 1,000 psi - for return flow type.

Q3-6 The cadmium cell flame detector and stack detector.

Q3-7 Reduce draft.

Q3-8 The two wires (Figure 43) from the cad cell connect to terminals F-F on the primary control (or terminals S-S on older controls).

Q3-9 0.03 to 0.06 inches W.C.

Q3-10 ASTM D2156 Test Method. Test Instrument: Bacharach True-Spot Smoke Tester.

Q3-11 A high carbon dioxide percent reading indicates a higher combustion efficiency.

Q3-12 When delivery pressure to burner gets below 100 psig.

Q3-13 The main difference is "the way in which fuel and combustion air are mixed". The flame retention burner controls the flow pattern and allows more efficient mixing. The other difference is that the flame retention burner uses a 3450 rpm motor versus a 1725 rpm motor.

SECTION 4. ELECTRICAL CIRCUITS

Q4-1 The heat anticipation of a 4-wire room thermostat is a small resister that is energized whenever the heating system is on. It "fools the bimetal element into thinking" that the room has warmed up before it actually does.

Q4-2 The cooling anticipation is energized whenever the air conditioning has cycled off. It also fools the bimetal element to cause the air conditioner to cycle on sooner than the bimetal is able to sense.

Q4-3 24 volts.

Q4-4 L unit control: control by preset limits.

Q4-5 One located downstream from the heat exchanger to detect overheating caused by low air flow or over firing; one located upstream of the heat exchanger to detect overheating caused by no air flow.

Q4-6 Bimetal type pilot safety: a three-wire device with a single pole double throw switch.

Q4-7 Fan control on the BDP type of gas valve system is not serviceable.

Q4-8 Honeywell R8118 and R8119 - see paragraph 4.3 for details.

SECTION 5. ELECTRIC HEAT

Q5-1 The cost per Btu purchased is much higher (see Section 8 for more details on heat pump).

Q5-2 A spiral-wound wire heating element made of nickel and chromium alloy.

Q5-3 A heat relay in an electric furnace is a timed start heater control. When the thermostat calls for heat, it energizes a small resistance heater in the heat relay. When the heat generated in the heat relay resistance heater is enough to warp a bimetal switch, the normally open contacts of the relay will close, energizing the heater element.

Q5-4 The flow of the electric current to the heating element is sensed to determine when to energize the furnace blower fan.

SECTION 6. STEAM AND HOT WATER SYSTEMS

Q6-1 (a)	Q6-3 (a)	Q6-5 (b)	Q6-7 (b).
Q6-2 (a)	Q6-4 (a)	Q6-6 (a)	

APPENDIX B (Continued)

SECTION 7. STEAM TRAP

Q7-1 Three major classifications: mechanical, thermostatic, and thermodynamic.

Q7-2 Two types: inverted bucket and float.

Q7-3 Four types: bimetallic, thermal expansion, bellows, and float traps.

Q7-4 Three types: orifice plate, piston impulse, and disk.

Q7-5 Service, operational, and economic considerations.

Q7-6 2:1 to 10:1.

Q7-7 Visual observation, sound detection, and temperature measurements.

SECTION 8. HEAT PUMPS

Q8-1 The heat pump is an air conditioning system which operates as a heating system in the reverse cycle system.

Q8-2 Heat pump systems are provided with auxiliary electric heaters which come on only when the heat pump cannot meet the demand for heat.

SECTION 9. HEATING SYSTEMS MAINTENANCE PROCEDURES

Q9-1 (a)

Q9-2 (a)

Q9-3 (a).

REFERENCES

NOTE: THE FOLLOWING REFERENCED DOCUMENTS FORM A PART OF THIS HANDBOOK TO THE EXTENT SPECIFIED HEREIN. USERS OF THIS HANDBOOK SHOULD REFER TO THE LATEST REVISIONS OF CITED DOCUMENTS UNLESS OTHERWISE DIRECTED.

FEDERAL/MILITARY SPECIFICATIONS, HANDBOOKS AND INSTRUCTIONS:

Unless otherwise indicated copies are available from the Naval Publishing and Printing Service Office (NPPSO), Standardization Document Order Desk, Building 4D, 700 Robbins Avenue, Philadelphia, PA 19111-5094.

SPECIFICATION

WW-T-696	Traps, Steam and Air

HANDBOOK

MIL-HDBK-1003/8A	Exterior Distribution of Utility Steam, High Temperature Water (HTW), Chilled Water, Natural Gas, and Compressed Air

OTHER GOVERNMENT DOCUMENTS AND PUBLICATIONS:

NAVFACINST

5100.11	Command Safety and Health Program

(Unless otherwise indicated, copies are available from Naval Publications and Forms Center, 5801 Tabor Avenue, Philadelphia, PA 19120.)

NON-GOVERNMENT PUBLICATIONS:

THE AMERICAN SOCIETY FOR TESTING AND MATERIALS (ASTM)

ASTM D2156	Standard Test Method for Smoke Density in Flue Gases From Burning Distillate Fuels

(Unless otherwise indicated, copies are available from the American Society for Testing and Materials (ASTM), 1916 Race Street, Philadelphia, PA 19103.)

GLOSSARY

Air Binding or Air Bound	A condition in which a bubble or other pocket of air is present in a pipeline or item of equipment and, by its presence, prevents or reduces the desired flow or movement of the liquid or gas in the pipeline or equipment.
Air Cushion Tank	A closed tank, generally located above the boiler and connected to a hydronic system in such a manner that when the system is initially filled with water, air is trapped within the tank. When the water in the system is heated, it expands and compresses the air trapped within the air cushion tank, thus providing space for the extra volume of water without creating excessive pressure. Also called expansion tank.
Air-Gas Ratio	The ratio of combustion air supply flow rate to the fuel gas supply flow rate.
Air Shutter	An adjustable shutter on the primary air openings of a burner, which is used to control the amount of combustion air introduced into the burner body.
Air Vent	A valve installed at the high points in a hot water system to permit the elimination of air from the system.
Aldehyde	A class of compounds, which can be produced during incomplete combustion of a fuel gas. They have a pungent distinct odor.
Ambient Temperature	The temperature of the air in the area of study or consideration.
Available Head	The difference in pressure which can be used to circulate water in the system. The difference in pressure which may be used to overcome friction within the system. (See Pump Head, Head)
Atmospheric Burner	(See Burner)
Atmospheric Pressure	The pressure exerted upon the earth's surface by the weight of atmosphere above it.
Atom	The smallest unit of an element which retains the particular properties of that element.

Automatic Gas Pilot Device	A gas pilot incorporating a device, which acts to automatically shut off the gas supply to the appliance burner if the pilot flame is extinguished.
Backfire Protection	(See Flashback Arrestor)
Baffle	A surface used for deflecting fluids, usually in the form of a plate or wall.
Balancing Fit	(See Balance Fitting)
Balance Fitting	A pipe fitting or valve designed so that its resistance to flow may be varied. These are used to balance the pressure drop in parallel circuits.
Balancing Valve	(See Balance Fitting)
Baseboard	A terminal unit resembling the base trim of a house. These units are the most popular terminal unit for residential systems.
Boiler, Heating	That part of hydronic heating system in which heat is transferred from the fuel to the water. If steam is generated, it is a steam boiler. If the temperature of the water is raised without boiling, it is classed as a hot-water boiler.
Boiler Horsepower	The equivalent evaporation of 34.5 lb of water per hr from and at 212 degrees F. This is equal to a heat output of 970.3 X 34.5 = 33,475 Btu/h.
Bonnet	The part of the furnace casing which forms a plenum chamber from where supply ducts receive warmed air. Also called supply plenum.
Branch	That portion of the piping system which connects a terminal unit to the circuit.
Btu or British Thermal Unit	The quantity of heat required to raise the temperature of one pound of water one degree F.
Bull Head	The installation of a pipe tee in such a way that water enters (or leaves) the tee at both ends of the run (the straight through section of the tee) and leaves (or enters) through the side connection only.

Bunsen-Type Burner	A gas burner in which combustion air is injected into the burner by the gas jet emerging from the gas orifice, and this air is premixed with the gas supply within the burner body before the gas burns on the burner port.
Burner	A device for the final conveyance of gas, or a mixture of gas and air, to the combustion zone. (See also specific type of burner). **Injection Burner.** A burner employing the energy of a jet of gas to inject air for combustion into the burner and mix it with gas. **Atmospheric Injection Burner.** A burner in which the air injected into the burner by a jet of gas is supplied to the burner at atmospheric pressure. **Power Burner.** (See also Forced Draft Burner, Induced Draft Burner, Premixing Burner, and Pressure Burner). A burner in which either gas or air or both are supplied at pressure exceeding the line pressure for gas, and atmospheric pressure for air. **Yellow-Flame Burner.** A burner in which secondary air only is depended on for the combustion of the gas.
Burner Flexibility	The degree at which a burner can operate with reasonable characteristics with a variety of fuel gases and variations in input rate (gas pressure).
Burner Head	That portion of a burner beyond the outlet of the mixer tube which contains the burner ports.
Burner Port	(See Port)
Burning Speed	(See Flame Velocity)
Butane	A hydrocarbon fuel gas heavier than methane and propane and a major constituent of liquified petroleum gases.
Calorimeter	Device for measuring heat quantities, such as machine capacity, heat of combustion, specific heat, vital heat, heat leakage, etc.; also a device for measuring quality (or moisture content) of steam or other vapor.

Cfm	Cubic feet per minute.
Chap	Chapter
Chimney Effect	The upward movement of warm air or gas, compared with the ambient air or gas, due to the lesser density of the warmed air or gas.
Circuit	The piping extending from the boiler supply tapping to the boiler return tapping.
Circuit Main	The portion of the main in a multiple circuit system that carries only a part of the total capacity of the system.
Circulator	A motor driven device used to mechanically circulate water in the system. Also called Pump.
Colorimetric Detection Device	A device for detecting the presence of a particular substance, such as carbon monoxide, in which the presence of that substance will cause a color change in a material in the detector.
Combustion	The rapid oxidation of fuel gases accompanied by the production of heat or heat and light.
Combustion Air	Air supplied in an appliance specifically for the combustion of a fuel gas.
Combustion Chamber	The portion of an appliance within which combustion normally occurs.
Combustion Products	Constituents resulting from the combustion of a fuel gas with the oxygen in air, including the inerts, but excluding excess air.
Compression Tank	(See Air Cushion Tank)
Compound	A distinct substance formed by the chemical combination of two or more elements in definite proportions.
Condensable	A gas which can be easily converted to liquid form, usually by lowering the temperature and/or increasing pressure.
Connected Load	The total load in Btu/h attached to the boiler. It is the sum of the outputs of all terminal units and all heat to be supplied by the boiler for process applications.

Controls	Devices designed to regulate the gas, air, water or electricity supplied to a gas appliance. They may be manual, semi-automatic or automatic.
Control Valves	Any valve used to control the flow of water in a hydronic system.
Convection	The movement of a fluid set up by a combination of differences in density and the force of gravity. For example, warm water at the bottom of a vertical tank will rise and displace cooler water at the top. The cooler water will sink to the bottom as the result of its greater density.
Convector	A terminal unit surrounded on all sides by an enclosure having an air outlet at the top or upper front. Convectors operate by gravity recirculated room air.
Converter	A heat exchange unit designed to transfer heat from one distributing system to another. These may be either steam to water or water to water units. They are usually of shell and tube design.
Counterflow	In heat exchange between two fluids, opposite direction of flow, coldest portion of one meeting coldest portion of the other.
Cubic Foot of Gas	(Standard Conditions). The amount of gas which will occupy 1 cubic foot when at a temperature of 60 degrees F, and under a pressure equivalent to that of 30 in. of mercury.
Damper	A valve or plate which is installed in the cold and warm air ductwork and used to regulate the amount of air flowing through the duct. A damper may also be used in the flue of a furnace.
Dead Space	The short distance between a burner port and the base of a flame.
Degree Day	A unit used to estimate fuel consumption and to specify the heating load in winter, based on temperature difference and time. There are as many degree days for any one day as there are degrees F difference in temperature between the mean temperature for the day and 65 degrees F.

Density	The weight of a substance per unit volume. As applied to gases, the weight in pounds of a cubic foot of gas at standard pressure and temperature.
Design Heat Loss	The heat loss of a building or room at design indoor-outdoor temperature difference.
Design Load	The design heat loss plus all other heating requirements to be provided by the boiler.
Design Temperature Difference	The difference between the design indoor and outdoor temperatures.
Design Water Temperature	The average of the temperature of the water entering and leaving the boiler (or sub-circuit) when the system is operating at design conditions.
Design Water Temperature Drop	The difference between the temperature of the water leaving the boiler and returning to the boiler when the system is operating at design conditions. In large systems employing sub-circuits, the design temperature drop is usually taken as the difference in the temperature of the water entering and leaving each sub-circuit.
Dilution Air	Air which enters a draft hood and mixes with the flue gases.
Direct-Indirect Heating	A heating unit located in the room or space Unit to be heated and partially enclosed, the enclosed portion being used to heat air which enters from outside the room.
Direct Return	A two-pipe system in which the first terminal unit taken off the supply main is the first unit connected to the return main.
Discharge Coefficient	The ratio of the actual flow rate of a gas from an orifice or port to the theoretical, calculated flow rate. Always less than 1.0.
Distillation	Removal of gaseous substances from solids or liquids by applying heat.
D.M.S.	Drill Manufacturer's Standard - equivalent to Standard Twist Drill or Steel Wire Gauge Numbers.
Domestic Hot Water	The heated water used for domestic or household purposes such as laundry, dishes, bathing, etc.

Double Heat Transfer	The transfer of heat from the plant to the heated medium (usually liquid) and from the liquid to the air in the conditioned space.
Down-feed One-pipe Riser (Steam)	A pipe which carries steam downward to the heating units and into which condensate from the heating units drains.
Down Feed System	A Hydronic system in which the main is located above the level of the terminal units.
Down-feed System (Steam)	A steam heating system in which the supply mains are above the level of the heating units which they serve.
Drain Cock	A valve installed in the lowest point of a boiler or at low points of a heating system to provide for complete drainage of water from the system.
Draft	A current of air, usually referring to the difference in pressure which causes air or gases to flow through a chimney flue, heating unit or space.
Draft Hood	(Draft Diverter) A device built into an appliance, or made part of a vent connector from an appliance, which is designed to: (1) assure the ready escape of the products of combustion in the event of no draft, backdraft, or stoppage beyond the draft hood; (2) prevent a backdraft from entering the appliance; and (3) neutralize the effect of stack action of a chimney or gas vent upon the operation of the appliance.
Downdraft	Excessive high air pressure existing at the outlet of chimney or stack which tends to make gases flow downward in the stack.
Drilled Port Burner	A burner in which the ports have been formed by drilled holes in a thick section in the burner head or by a manufacturing method which results in holes similar in size, shape and depth.
Duct	Round or rectangular sheet metal pipes through which heat is carried from the furnace to the various rooms in the building.
Eccentric Reducer	A pipe fitting designed to change from one pipe size to another and to keep one edge of both pipes in line. These fittings should be installed so that the "in line" section of pipe is at the top.

Effective Heat Allowance	An allowance added to the test output of certain designs of radiation to compensate for a better distribution of heat within the heated space. Some agencies do not permit the use of effective heat allowance.
Electric Heating Element	A unit assembly consisting of a resistor, insulated supports, and terminals for connecting the resistor to electric power.
Element	One of the 96 or more basic substances of which all matter is composed.
Excess Air	Air which passes through an appliance and the appliance flues in excess of that which is required for complete combustion of the gas. Usually expressed as a percentage of the air required for complete combustion of the gas.
Expansion Tank	(See Air Cushion Tank)
Exposed Area	The area of any wall, window, ceiling, floor, or partition separating a heated room from the out-of-doors or from an unheated space.
Extinction Pop	(See Flashback)
Fahrenheit	The common scale of temperature measurement in the English system of units. It is based on the freezing point of water being 32 degrees F and the boiling point of water being 212 degrees F at standard pressure conditions.
Fan-Coil	A terminal unit consisting of a finned tube coil and a fan in a single enclosure. These units may be designed for heating, cooling, or a combination of the two. Some fan-coil units are designed to receive duct work so that the unit may serve more than one room.
Ferrous	Ferrous relates to objects made of iron or steel.
Filter	A porous material (fiberglass or foam plastic) which is installed in the air circulation system of a furnace to remove dust particles and pollen. Some are disposable,whereas some may be cleaned and re-used.
Fig	Figure.

Flash Boiler	A boiler with very limited water capacity. Usually about one gallon of water per 1,000 Btu/h net rating.
Floating Flames	An undesirable burner operating condition, usually indicating incomplete combustion in which flames leave the burner ports to "reach" for combustion air.
Flow Control Valve	A specially designed installed in the supply pipe, to prevent gravity circulation of hot water within the heating system when the pump is not in operation.
Flue	An enclosed passage in the chimney to carry exhaust smoke and fumes of the heating plant to escape to the outer air.
Flue Gases, Flue Products	Products of combustion and excess air in appliance flues or heat exchangers before the draft hood.
Flue Loss	The heat lost in flue products exiting from the flue outlet of an appliance.
Flue Outlet	The opening provided in an appliance for the escape of flue gases.
Fluid	A gas or liquid, as opposed to a solid.
Foot of Water	A measure of pressure. One foot of water is the pressure created by a column of water one foot in height. It is equivalent to 0.433 lb/sq in.
Forced Hot Water	Or forced circulation hot water. Hot water heating systems in which a pump is used to create the necessary flow of water.
Forced Draft Burner	A burner in which combustion air is supplied by a fan or blower.
Friction Head	In a hydronic system the friction head is the loss in pressure resulting from the flow of water in the piping system.
ft	Foot or feet.
Fuel	Any substance used for combustion.
Fuel	Gas Any substance in a gaseous form when used for combustion.

Fuel-oil Burner, Pressure Atomizing or Gun Type	A burner designed to atomize the oil for combustion under an oil supply pressure of 100 psig.
Fuel-oil Burner, Rotary Type	A burner employing a thrower ring that mixes oil and the air.
Fuel-oil Burner, Vaporizing Pot Type	These burners use the heat of combustion to vaporize the oil in a pool beneath the vaporizing or ring, and this vapor rising through the ring ignites and maintains combustion in the burner.
Furnace	That part of a warm air heating system in which combustion takes place.
Gal	Gallon or gallons.
Gate Valve	A valve designed in such a way that the opening for flow, when the valve is fully open, is essentially the same as the pipe and the direction of flow through the valve is in a straight line.
gpm	The abbreviation for "gallons per minute" which is a measure of rate flow.
Grate Area	Grate surface area measured in square feet, used in estimating the fuel burning rate.
Gravity Warm Air Heating System	System See "Warm air heating system."
Gravity Hot Water	Hot water heating systems in which the circulation of water through the system is due to the difference in the density of the water in the supply and return sides of the system.
Gross Output	A rating applied to boilers. It is the total quantity of heat which the boiler will deliver and at the same time meet all limitations of applicable testing and rating codes.
Hard Flame	A flame with a hot, tight, well-defined inner cone.
Head	A pressure difference. See pressure head, pump head, available head.
Header	A piping arrangement for inter-connecting two or more supply or return tappings of a boiler. Also a section of pipe, usually short in length, to which a number of branch circuits are attached.

Heat	A form of energy.
Heat Distributing Units	(See Terminal Units)
Heating Element	(See Terminal Units)
Heat Flow	(See Heat Loss)
Heating Effect Factor	An arbitrary allowance added to the test output of some types of terminal units when establish-ing the catalog ratings. This allowance is intended to give credit for improving heat distribution obtained from the terminal unit.
Heat, Latent	The heat which changes the form of a substance without changing its temperature.
Heat, Sensible	Heat which changes the temperature of a substance without changing its form.
Heat Exchanger	Any device for transferring heat from one fluid to another.
Heat Loss	As used in this manual, the term applies to the rate of heat transfer from a heated building to the outdoors.
Heat Loss Factor	A number assigned to a material or construction indicating the rate of heat transmission through that material or construction for a one degree temperature difference.
Heating Element (Electric)	A unit assembly consisting of a resistor, insulated supports, and terminals for connecting the resistor to electric power.
Heat Transmission	Any time-rate of heat flow; usually refers to conduction, convection, and radiation combined.
Heat Transmission Coefficient	Any one of a number of coefficients used in calculating heat transmission through different materials and structures, by conduction, convection, and radiation.
Heating Surface	All surfaces which transmit heat from flames or flue gases to the medium being heated.

Heating Unit (Electric)	A structure containing one or more heating elements, electrical terminals or leads, electric insulation, and a frame or casing, all assembled together in one unit.
Heating Value	The number of British thermal units produced by the complete combustion at constant pressure of one cubic foot of gas. Total heating value includes heat obtained from cooling the products to the initial temperature of the gas and air and condensing the water vapor formed during combustion.
High Limit Control	A switch controlled by the temperature of the water in the boiler and used to limit burner operation whenever the boiler water temperature reaches the maximum to be permitted. A safety control.
High-Temperature Water System (HTW)	A hot water system operating at temperatures over 350 degrees F and usual pressures of about 300 psi.
High Voltage Controls	Also called "line voltage controls." Controls designed to operate at normal line voltage, usually 115 V.
Hot Water Heating	Hydronic systems in which heated water is Systems circulated through the terminal units.
Humidistat	An instrument that is used to regulate the operation of a humidifier to control the amount of humidity in the conditioned air.
Humidity, Absolute	The amount of moisture actually in a given unit volume of air.
Humidity, Relative	A ratio of the weight of moisture that air actually contains at a certain temperature as compared to the amount that it could contain if it were saturated.
Hydrocarbon	Any of a number of compounds composed of carbon and hydrogen.
Hydronics	Pertaining to heating or cooling with water or vapor.
Ignition	The act of starting combustion.
Ignition Temperature	The minimum temperature at which combustion can be started.

Injection	Drawing primary air into a gas burner by means of a flow of fuel gas.
Input Rate	The quantity of heat or fuel supplied to an appliance, expressed in volume or heat units per unit time, such as cubic feet per hour or Btu per hour.
Input Rating	The gas-burning capacity of an appliance in Btu per hour as specified by the manufacturer. Appliance input rating are based on sea level operation up to 2,000 ft elevation. For operation at elevations above 2,000 ft, input ratings should be reduced at the rate of 4 percent for each 1,000 ft above sea level.
Instantaneous Water Heater	See tankless water heater.
Joint, Expansion, Bellows	An item of equipment used to compensate for the expansion and contraction of a of pipe. The device is built with a flexible bellows that stretches or is compressed as necessary to accept the movement of the piping.
Joint, Expansion, Slip	A joint in which the provision for expansion and contraction consists of a cylinder that moves in and out of the main body of the device.
Jet Burner	A burner in which streams of gas or air-gas mixtures collide in air at some point above the burner ports and burn there.
Lean Mixture	An air-gas mixture which contains more air than the amount needed for complete combustion of the gas.
Lifting Flames	An unstable burner flame condition in which flames lift or blow off the burner port(s).
Liquefied Petroleum Gases	The terms "Liquefied Petroleum Gases," "LPG" and "LP Gas" mean and include any fuel gas which is composed predominantly of any of the following hydrocarbons, or mixtures of them: propane, propylene, normal butane or isobutane and butylenes.
LNG	Liquefied natural gas. Natural gas which has been cooled until it becomes a liquid.

Low Link Control	A switch operated by the temperature of the water in the boiler and used to start the burner at any time the water temperature drops to some prescribed minimum. This control is used if the boiler is supplying domestic hot water as well as heat for the building.
Low-Temperature Water System (LTW)	A hot water heating system operating at design water temperatures of 250 degrees F or less and a maximum working pressure of 160 psi.
Low Voltage Control	Controls designed to operate at voltages of 20 to 30 V.
LP Gas-Air Mixtures	Liquefied petroleum gases distributed at relatively low pressures and normal atmospheric temperatures which have been diluted with air to produce desired heating value and utilization characteristics.
Luminous Flame Burner	(See Burner, Yellow Flame)
Main	The pipe used to carry water between the boiler and the branches of the terminal units.
Make-up Air	The air which is supplied to a building to replace air that has been removed by an exhaust system.
Make Up Water Line	The water connection to the boiler or system for filling or adding water when necessary.
Manifold	The conduit of an appliance which supplies gas to the individual burners.
Manifold Pressure	The gas pressure in an appliance manifold, upstream of burner orifices.
Manufactured Gas	A fuel gas which is artificially produced by some process, as opposed to natural gas, which is found in the earth. Sometimes called town gas.
Medium, Heating	A substance used to convey heat from the heat source to the point of use. It is usually air, water, or steam.
Medium-Temperature Water System	A hot water system operating at temperatures of 350 degrees F or less, with pressures not exceeding 150 psi.
Methane	A hydrocarbon gas - the principal component of natural gases.

Mixed Gas	A gas in which the heating value of manufactured gas is raised by commingling with natural or LPG (except where natural gas or LPG is used only for "enriching" or "reforming").
Mixer	That portion of a burner where air and gas are mixed before delivery to the burner ports. **Mixer Face.** The air inlet end of the mixer head. **Mixer Head.** That portion of an injection type burner, usually enlarged, into which primary air flows to mix with the gas stream. Mixer Throat (Venturi throat). That portion of the mixer which has the smallest cross-sectional area, and which lies between the mixer head and the mixer tube. Mixer Tube. That portion of the mixer which lies between the throat and the burner head.
Molecule	The smallest portion of an element or compound which retains the identity and characteristics of the element or compound.
Multiple Circuit	A system in which the main, or mains, form two or more parallel loops between the boiler supply and the boiler return.
Multiple Zone	A system controlled by two or more thermostats.
Natural Draft	The motion of flue products through an appliance generated by hot flue gases rising in a vent connected to the furnace flue outlet.
Natural Gas	Any gas found in the earth, as opposed to gases which are manufactured.
Needle, Adjustable	A tapered projection, coaxial with and movable with respect to a fixed orifice used to regulate the flow of gas.
Needle, Fixed	A tapered projection, the position of which is fixed, coaxial with an orifice which can be moved with respect to the needle to regulate flow of gas.

Net Rating	A rating applied to boilers. It is the quantity of heat available in Btu/h for the connected load.
Non-Ferrous	Metals other than iron or steel. In heating systems the principal non-ferrous metals are copper and aluminum.
Odorant	A substance added to an otherwise odorless, colorless and tasteless gas to give warning of gas leakage and to aid in leak detection.
Oil Burner Relay	A special, multi-purpose control used with oil burners. The device controls the operation of the oil burner and also acts as a safety to prevent operation in the even of malfunction.
One-Pipe Fitting	A specially designed tee for use in a one-pipe system to connect the supply or return branch into a circuit. These fittings cause a portion of the water flowing through the circuit to pass through the terminal unit.
One-Pipe System	A forced hot-water system using one continuous pipe or main from the boiler supply to the boiler return. The terminal units are connected to this pipe by two smaller pipes known as supply and return branches.
Orifice	An opening in an orifice cap (hood), orifice spud or other device through which gas is discharged, and whereby the flow of gas is limited and/or controlled. (See also Universal Orifice)
Orifice Cap (Hood)	A movable fitting having an orifice which permits adjustment of the flow of gas by changing its position with respect to a fixed needle or other device extending into the orifice.
Orifice Discharge Coefficient	(See Discharge Coefficient)
Orifice Spud	A removable plug or cap containing an orifice which permits adjustment of the gas flow either by substitution with a spud having different sized orifices (fixed orifice) or by motion of an adjustable needle into or out of the orifice (adjustable orifice).
Outdoor Design Temperature	The outdoor temperature on which design heat losses are based.

Overrating	Operation of a gas burner at a greater rate than design allows.
Oxygen	An elemental gas that comprises approximately 21 percent of the atmosphere by volume. Oxygen is one of the elements required for combustion.
Packaged Boiler	A boiler having all components, including burner, boiler, controls, and auxiliary equipment, assembled as a unit.
Panel Heating	A heating system in which heat is transmitted by both radiation and convection from panel surfaces to both air and surrounding surfaces.
Panel Radiator	A heating unit placed on or flush with a flat wall surface, and intended to function essentially as a radiator.
Panel Systems	Or radiant system. A heating system in which the ceiling or floor serves as the terminal unit.
Peak Load	The maximum load carried by a system or a unit of equipment over a designated period of time.
pH or pH Value	A term based on the hydrogen ion concentration in water, which denotes whether the water is acid, alkaline, or neutral. A pH value of 8 or more indicates a condition of alkalinity: of 6 or less, acidity. A pH of 7 means the water is neutral.
Pilot	A small flame which is used to ignite the gas at the main burner.
Pilot Switch	A control used in conjunction with gas burners. Its function is to prevent operation of the burner in the event of pilot failure.
Piping and Pick-up Allowance	That portion of the gross boiler output that is allowed for warming up the heating system and for taking care of the heat emission from a normal amount of piping.
Pitch	The amount of slope given to a horizontal pipe when it is installed in a heating system.
Plenum Chamber	An air compartment maintained under pressure, and connected to one or more distributing ducts.

Pressure Head	The force available to cause circulation of water or vapor in a hydronic system. See head, pump head, available head.
Port	Any opening in a burner head through which gas or an air-gas mixture is discharged for ignition.
Port Loading	The input rate of a gas burner per unit of port area, obtained by dividing input rate by total port area. Usually expressed in terms of Btu per hour per square inch of port area.
Power Burner	(See Burner)
Premixing Burner	A burner in which all, or nearly all, combustion air is mixed with the gas as primary air.
Pressure Burner	A burner in which an air and gas mixture under pressure is supplied, usually at 0.5 to 14 in. water column.
Pressure Regulator	A device for controlling and maintaining a uniform outlet gas pressure.
Pressure Reducing Valve	A diaphragm operated valve installed in the make-up water line of a hot water heating system to introduce water into the system, and prevent the system from possible exposure to city water pressures higher than the working pressure of the boiler.
Pressure Relief Valve	A device for protecting a hot water boiler (or a hot water storage tank) from excessive pressure by opening at a predetermined pressure and discharging water, or steam, at a rate sufficient to prevent further build-up of pressure.
Primary Air	The combustion air introduced into a burner which mixes with the gas before it reaches the port. Usually expressed as a percentage of air required for complete combustion of the gas.
Primary Air Inlet	The opening or openings through which primary air is admitted into a burner.
Propane	A hydrocarbon gas heavier than methane but lighter than butane. It is used as a fuel gas alone, mixed with air or a major constituent of liquefied petroleum gases.

psig	Pounds per square inch gauge pressure.
Pulsation	A panting of the flames in a boiler or furnace, indicating cyclic and rapid changes in the pressure in the combustion space.
Pump	A motor driven device used to mechanically circulate water in the system. Also called a circulator.
Pump Head	The difference in pressure on the supply and intake sides of the pump created by the operation of the pump.
Quenching	A reduction in temperature whereby a combustion process is retarded or stopped.
Radiant Burner	(See Infrared Burner)
Radiant Heating	A heating system in which only the heat radiated from panels is effective in providing the heating requirements. The term radiant heating is frequently used to include both panel and radiant heating.
Radiation	The transmission of energy by means of electromagnetic waves.
Radiator	A heating unit exposed to view within the room or space to be heated. A radiator transfers heat by radiation to objects within visible range, and by conduction the surrounding air which in turn is circulated by natural convection; a so called radiator is also a convector, but the term radiator has been established by long usage.
Radiator (Concealed)	A heating device located within, adjacent to, or exterior to the room being heated, but so covered or enclosed or concealed the heat transfer surface of the device, which may be either a radiator or a convector, is not visible from the room. Such a device transfers its heat to the room largely by convection air currents.
Radiator Valve	A valve installed on a terminal unit to manually control the flow of water through the unit.
Rate	(See Input)
Recirculated Air	Return air passed through the conditioner before being supplied to the conditioned space again.

Reducing Fitting	A pipe fitting designed to change from one pipe size to another.
Regulator	(See Pressure Regulator)
Relay	An electrically operated switch. Usually the control circuit of the switch uses low voltage while the switch makes and breaks a line voltage circuit. However, both the control and load circuits are of the same voltage in some instances.
Relief Opening	The opening in a draft hood to permit ready escape to the atmosphere of flue products from the draft hood in event of no draft, back draft or stoppage beyond the draft hood, and to permit inspiration of air into the draft hood in the event of a strong chimney updraft.
Residential Buildings	Single family homes, duplexes, apartment buildings.
Return Branch	The piping used to return water from a terminal unit to the main, circuit main, or trunk.
Return Main	The pipe used to carry water from the return branches of the terminal units to the boiler.
Return Mains	Pipes or conduits which return the heating or cooling medium from the heat transfer unit to the source of heat or refrigeration.
Return Piping	That portion of the piping system that carries water from the terminal units back to the boiler.
Return Tapping	The opening in a boiler into which the pipe used for returning condensate or water to the boiler is connected.
Reverse Acting Control	A switch controlled by temperature and designed to open on temperature drop and close on temperature rise.
Reverse Return	A two-pipe system in which the return connections from the terminal units into the return main are made in the reverse order from that in which the supply connections are made in the supply main.
Rich Mixture	A mixture of gas and air containing too much fuel or too little air for complete combustion of the gas.

Riser	This generally refers to the vertical portion of the supply or return branches. However, any vertical piping in the heating system might be termed a riser.
Run-Out	This term generally applies to the horizontal portion of branch circuits.
Safety Valve	A device for protecting a steam boiler from excessive pressure by opening at a predetermined pressure setting and allowing steam to escape at a rate equal to or greater than the steam generating capacity of the boiler.
Secondary Air	Combustion air externally supplied to a burner flame at the point of combustion.
Series Loop	A forced hot water heating system with the terminal units connected so that all the water flowing through the circuit passes through each series-connected unit in the circuit.
Single Circuit System	A hydronic system composed of only one circuit.
Single Port Burner	A burner in which the entire air-gas mixture issues from a single port.
Soft Flame	A flame partially deprived of primary air such that the combustion zone is extended and inner cone is ill-defined.
Soot	A black substance, mostly consisting of small particles of carbon, which can result from incomplete combustion and appear as smoke.
SNG	Supplementary natural gas. Gases which are manufactured to duplicate natural gas.
Spud	(See Orifice)
Square Foot (Steam)	A term used to express the output of boilers and radiation. When applied to boilers, it is 240 Btu/h; when applied to terminal units, it represents the amount of radiation which will emit 240 Btu/h when supplied with steam at 215 degrees F and air at 65 degrees F.
Square Head Cock	A type of valve often used as a balancing valve. In place of the valve handle, the stem is made square. A wrench is used to adjust the valve setting.

Specific Gravity	Specific Gravity is the ratio of the weight of a given volume of gas to that of the same volume of air, both measured at the same temperature and pressure.
Spoiler Screw	(Breaker Bolt) a screw or bolt moved in or out of the gas jet in a burner to control primary air injection.
Standard Conditions	Pressure and temperature conditions selected for expressing properties of gases on a common basis. In gas appliance work, these are normally 30 in. of mercury and 60 degrees F.
Static Pressure	The normal force per unit area at a small hole in a wall of the pipe through which the fluid (water) flows.
Steam Heating System	A hydronic system in which steam is circulated through the terminal units.
Sub-circuits	A term applied to circuits taken off of the primary distribution loop of a complex hydronic system.
Supply Branch	The piping used to supply heated water from a main, circuit main, or trunk to the terminal unit.
Supply Main	The pipe used to distribute water from the boiler to the supply branches of the terminal units.
Supply Piping	That portion of the piping system that carries water from the boiler to the terminal units or to the point of use.
Supply Tapping	The opening in a boiler into which the supply main is connected.
System Temperature	The average of the temperatures of the water leaving the boiler and returning to the boiler.
Tankless Water Heater	An indirect water heater designed to operate without a hot water storage tank in the system. Also called an instantaneous heater.
Tee	A pipe fitting designed to connect three sections of pipe together. Two of the connections are in line, the third is at right angles to the other two.

Terminal Units	That part of a hydronic system in which heat is transferred from the water to the air in the air conditioned space. Common terminal units include radiators, convectors, baseboard, unit heaters, finned tube, etc.
Thermal Conductivity	A term indicating the ability of a material to transmit heat. Thermal conductivity is the reciprocal of thermal resistance.
Thermal Head	The head produced by the difference in weight of the heated water in the supply side of the system and the cooler water in the return side. This is the only head available to cause circulation of water in a gravity system.
Thermal Radiation	The transmission of heat from a hot surface to a cooler one in the form of invisible electro-magnetic waves, which on being absorbed by the cooler surface, raise the temperature of that surface.
Thermal Resistance	The resistance a material offers to the transmission of heat. Insulating materials have high thermal resistance. Materials such as metals have low thermal resistance.
Therm	A unit of heat having a value of 100,000 Btu.
Thermostat	A control (switch) which is operated by the temperature of the air.
Throat	(See Venturi)
Tie Rod	The sections of cast-iron sectional boilers are held in tight contact by means of tie rods that pass entirely through the sections.
Transformer	A device designed to change voltage. In heating controls the transformer usually converts line voltage (115 V) to low voltage (24 V).
Trunk	Or trunk main. The section of the main in a multiple circuit system that carries the combined capacity of two or more of the circuits.
Two-Pipe System	A hot-water heating system using one pipe from the boiler to supply heated water to the terminal units, and a second pipe to return the water from the terminal units back to the boiler.

Total Air	The total amount of air supplied to a burner. It is the sum of primary, secondary, and excess air.
Total Pressure	Also called impact pressure. The pressure measured in a moving fluid by an impact tube. It is the sum of the velocity pressure and the static pressure.
Town Gas	(See Manufactured Gas)
Turndown	The ratio of maximum to minimum input rates.
Ultimate Carbon Dioxide	The percentage of carbon dioxide in dry combustion products when a fuel (gas) is completely burned with exactly the amount of air needed for complete combustion. This is the theoretical maximum carbon dioxide which can be obtained for a given gas in burning the gas in air.
Unit Heater	Also see fan coil. The term applies to a terminal unit designed to heat a given space. It consists of a fan and motor, a heating element, and an enclosure.
Universal Orifice	A combination fixed and adjustable orifice designed for the use of two different gases, such as LPG and natural gas.
Updraft	Excessively low air pressure existing at the outlet of a chimney or stack which tends to increase the velocity and volume of gases passing up the stack.
Up-Feed System	A hydronic system in which the supply main is located below the level of the terminal units.
Unit Ventilator	A terminal unit in which a fan is used to mechanically circulate air over the heating coil. These units are so constructed that both outdoor and room air may be circulated so as to provide ventilation as well as heat. These units may contain a cooling coil for summer operation.
Utility Gases	Natural gas, manufactured gas, liquefied petroleum gas - air mixtures or mixtures of any of these gases.
Vapor	The gaseous form of a substance that, under other conditions of pressure, temperature, or both, is a solid or a liquid.

Vapor Barrier	A material that is impervious to the passage of water vapor through it.
Velocity Pressure	Pressure exerted by a flowing gas by virtue of its movement in the direction of its motion. It is the difference between total pressure and static pressure.
Vent	A device, such as a pipe, to transmit flue products from an appliance to the outdoors. This term also is used to designate a small hole or opening for the escape of a fluid (such as in a gas control).
Vents	See air vents.
Ventilation	The introduction of outdoor air into a building by mechanical means.
Vent Gases	Products of combustion from gas appliances plus excess air, plus dilution air in the venting system above a draft hood.
Venturi	A section in a pipe or a burner body that narrows down and then flares out again.
Viscosity	The property of a fluid to resist flow.
Water Column	Abbreviated as W.C. A unit used for expressing pressure. One inch water column equals a pressure of 0.578 oz/sq in.
Water Tube Boiler	A steel, hot-water boiler in which the water is circulated through the tubes and the hot gases from combustion of the fuel are circulated around the tubes inside the shell.
Yellow Flame Burner	(See Burner)
Yellow Tips	(Yellow Tipping) The appearance of yellow tips in an otherwise blue flame, indicating the need for additional primary air.
Zone	That portion of a hydronic system, the operation of which is controlled by a single thermostat.
Zoned System	A hydronic system in which more than one thermostat is used. This permits independent control of room air temperature at more than one location.

Zone Valve	A valve, the operation of which is controlled by a thermostat. They are used in hydronic systems to control the flow of water in localized parts of the system, thus making it possible to independently control the temperature in different zones, or areas, of the building.

CUSTODIAN
NAVY - YD

PREPARING ACTIVITY
NAVY - YD

PROJECT NO.
FACR-1067

STANDARDIZATION DOCUMENT IMPROVEMENT PROPOSAL

INSTRUCTIONS

1. The preparing activity must complete blocks 1, 2, 3, and 8. In block 1, both the document number and revision letter should be given.
2. The submitter of this form must complete blocks 4, 5, 6, and 7.
3. The preparing activity must provide a reply within 30 days from receipt of the form.

NOTE: This form may not be used to request copies of documents, nor to request waivers, or clarification of requirements on current contracts. Comments submitted on this form do not constitute or imply authorization to waive any portion of the referenced document(s) or to amend contractual requirements.

I RECOMMEND A CHANGE:	1. DOCUMENT NUMBER MIL-HDBK-1114/2	2. DOCUMENT DATE (YYMMDD) 91/12/31

3. DOCUMENT TITLE
MAINTENANCE AND OPERATION OF HEATING SYSTMS

4. NATURE OF CHANGE *(Identify paragraph number and include proposed rewrite, if possible. Attach extra sheets as needed.)*

5. REASON FOR RECOMMENDATION

6. SUBMITTER

a. NAME (Last, First, Middle Initial)	b. ORGANIZATION	
c. ADDRESS (Include Zip Code)	d. TELEPHONE (Include Area Code) (1) Commercial (2) AUTOVON (If applicable)	7. DATE SUBMITTED (YYMMDD)

8. PREPARING ACTIVITY

a. NAME	b. TELEPHONE (Include Area Code) (1) Commercial (2) AUTOVON
Commanding Officer Northern Division, Code 164	(215) 897-6688
c. ADDRESS (Include Zip Code) Naval Facilities Eng . Command Philadelphia, PA 19112-5094	IF YOU DO NOT RECEIVE A REPLY WITHIN 45 DAYS, CONTACT: Defense Quality and Standardization Office 5203 Leesburg Pike, Suite 1403, Falls Church, VA 22041-3466 Telephone (703) 756-2340 AUTOVON 289-2340