UFC 3-430-08N
16 January 2004

UNIFIED FACILITIES CRITERIA (UFC)

DESIGN: CENTRAL HEATING PLANTS

APPROVED FOR PUBLIC RELEASE; DISTRIBUTION UNLIMITED

UNIFIED FACILITIES CRITERIA (UFC)

DESIGN: CEN TRAL HEATING PLANTS

Any copyrighted material included in this UFC is identified at its point of use.
Use of the copyrighted material apart from this UFC must have the permission of the copyright holder.

U.S. ARMY CORPS OF ENGINEERS

NAVAL FACILITIES ENGINEERING COMMAND (Preparing Activity)

AIR FORCE CIVIL ENGINEERING SUPPORT AGENCY

Record of Changes (changes indicated by **1**\ ... /**1**/)

Change No.	Date	Location

FOREWORD

The Unified Facilities Criteria (UFC) system is prescribed by MIL-STD 3007 and provides planning, design, construction, sustainment, restoration, and modernization criteria, and applies to the Military Departments, the Defense Agencies, and the DoD Field Activities in accordance with USD(AT&L) Memorandum dated 29 May 2002. UFC will be used for all DoD projects and work for other customers where appropriate.

UFC are living documents and will be periodically reviewed, updated, and made available to users as part of the Services' responsibility for providing technical criteria for military construction. Headquarters, U.S. Army Corps of Engineers (HQUSACE), Naval Facilities Engineering Command (NAVFAC), and Air Force Civil Engineer Support Agency (AFCESA) are responsible for administration of the UFC system. Defense agencies should contact the preparing service for document interpretation and improvements. Technical content of UFC is the responsibility of the cognizant DoD working group. Recommended changes with supporting rationale should be sent to the respective service proponent office by the following electronic form: Criteria Change Request (CCR). The form is also accessible from the Internet sites listed below.

UFC are effective upon issuance and are distributed only in electronic media from the following sources:

- Unified Facilities Criteria (UFC) Index http://65.204.17.188//report/doc_ufc.html.
- USACE TECHINFO Internet site http://www.hnd.usace.army.mil/techinfo/index.htm.
- NAVFAC Engineering Innovation and Criteria Office Internet site http://criteria.navfac.navy.mil.
- Construction Criteria Base (CCB) system maintained by the National Institute of Building Sciences at Internet site http://www.nibs.org/ccb.

Hard copies of UFC printed from electronic media should be checked against the current electronic version prior to use to ensure that they are current.

AUTHORIZED BY:

DONALD L. BASHAM, P.E.
Chief, Engineering and Construction Division
U.S. Army Corps of Engineers

DR. JAMES W WRIGHT, P.E.
Chief Engineer
Naval Facilities Engineering Command

KATHLEEN I. FERGUSON, P.E.
The Deputy Civil Engineer
DCS/Installations & Logistics
Department of the Air Force

Dr. GET W. MOY, P.E.
Director, Installations Requirements and Management
Office of the Deputy Under Secretary of Defense (Installations and Environment)

CONTENTS

Page

CHAPTER 1 INTRODUCTION

Paragraph 1-1 PURPOSE AND SCOPE 1-1
1-2 APPLICABILITY 1-1
1-2.1 General Building Requirements 1-1
1-2.2 Safety 1-1
1-2.3 Fire Protection 1-1
1-2.4 Antiterrorism/Force Protection 1-2

APPENDIX A MIL-HDBK 1003/6, 15 JAN 1991 ..... A-1

CHAPTER 1

INTRODUCTION

1-1 **PURPOSE AND SCOPE**. This UFC is comprised of two sections. Chapter 1 introduces this UFC and provides a listing of references to other Tri-Service documents closely related to the subject. Appendix A contains the full text copy of the previously released Military Handbook (MIL-HDBK) on this subject. This UFC serves as criteria until such time as the full text UFC is developed from the MIL-HDBK and other sources.

This UFC provides general criteria for the design of steam and high temperature water central and individual heating plants. The primary purpose of these plants is to generate steam and/or high temperature water for space heat and process steam.

Note that this document does not constitute a detailed technical design, maintenance or operations manual, and is issued as a general guide to the considerations associated with design of economical, efficient and environmentally acceptable heating plants.

1-2 **APPLICABILITY**. This UFC applies to all Navy service elements and Navy contractors; Army service elements should use the references cited in paragraph 1-3 below; all other DoD agencies may use either document unless explicitly directed otherwise.

1-2 **APPLICABILITY**. This UFC applies to all DoD agencies and contractors preparing designs of maintenance facilities for ammunition, explosives and toxins.

1-2.1 **GENERAL BUILDING REQUIREMENTS**. All DoD facilities must comply with UFC 1-200-01, *Design: General Building Requirements*. If any conflict occurs between this UFC and UFC 1-200-01, the requirements of UFC 1-200-01 take precedence.

1-2.2 **SAFETY**. All DoD facilities must comply with DODINST 6055.1 and applicable Occupational Safety and Health Administration (OSHA) safety and health standards.

NOTE: All **NAVY** projects, must comply with OPNAVINST 5100.23 (series), *Navy Occupational Safety and Health Program Manual*. The most recent publication in this series can be accessed at the NAVFAC Safety web site: www.navfac.navy.mil/safety/pub.htm. If any conflict occurs between this UFC and OPNAVINST 5100.23, the requirements of OPNAVINST 5100.23 take precedence.

1-2.3 **FIRE PROTECTION**. All DoD facilities must comply with UFC 3-600-01, *Design: Fire Protection Engineering for Facilities*. If any conflict occurs between this UFC and UFC 3-600-01, the requirements of UFC 3-600-01 take precedence.

1-2.4 **ANTITERRORISM/FORCE PROTECTION**. All DoD facilities must comply with UFC 4-010-01, *Design: DoD Minimum Antiterrorism Standards for Buildings*. If any conflict occurs between this UFC and UFC 4-010-01, the requirements of UFC 4-010-01 take precedence.

APPENDIX A

MIL-HDBK 1003/6
CENTRAL HEATING PLANTS

+)))))))))))))),
* INCH-POUND *
.)))))))))))))-
MIL-HDBK-1003/6
15 JANUARY 1991
SUPERSEDING
DM-3.06
APRIL 1985

MILITARY HANDBOOK

CENTRAL HEATING PLANTS

AMSC/NA AREA FACR

DISTRIBUTION STATEMENT A. APPROVED FOR PUBLIC RELEASE: DISTRIBUTION IS UNLIMITED

ABSTRACT

Basic design guidance is presented for steam heating plants and high temperature water plants for use by architects and engineers. Criteria and design requirements are given for selection of fuel, solid and liquid fuel handling and storage, combustion equipment, auxiliary equipment, water treatment, and pollution abatement systems, plants.

FOREWORD

This handbook has been developed from an evaluation of facilities in the shore establishment, from surveys of the availability of new materials and construction methods, and from selection of the best design practices of the Naval Facilities Engineering Command, other Government agencies, and the private sector. This handbook was prepared using, to the maximum extent feasible, national professional society, association, and institute standards. Deviations from these criteria cannot be without prior approval of NAVFACENGCOM HQ (Code 04).

Design cannot remain static any more than can the functions it serves or the technologies it uses. Accordingly, recommendations for improvements are encouraged and should be furnished to Commanding Officer, Naval Energy and Environmental Support Activity, Code 111C, Port Hueneme, CA. 93043-5014; telephone (805) 982-3499.

THIS HANDBOOK SHALL NOT BE USED AS A REFERENCE DOCUMENT FOR PROCUREMENT OF FACILITIES CONSTRUCTION. IT IS TO BE USED IN THE PURCHASE OF FACILITIES ENGINEERING STUDIES AND DESIGN (FINAL PLANS, SPECIFICATIONS, AND COST ESTIMATES). DO NOT REFERENCE IT IN MILITARY OR FEDERAL SPECIFICATIONS OR OTHER PROCUREMENT DOCUMENTS.

MECHANICAL ENGINEERING CRITERIA MANUALS

Document Number	Title	PA
DM-3.01	Plumbing Systems	WESTDIV
MIL-HDBK-1003/2	Incinerators	WESTDIV
DM-3.03	Heating, Ventilating, Air Conditioning and Dehumidifying Systems	WESTDIV
DM-3.04	Refrigeration Systems for Cold Storage	WESTDIV
DM-3.05	Compressed Air and Vacuum Systems	WESTDIV
MIL-HDBK 1003/6	Central Heating Plants	NEESA
MIL-HDBK-1003/7	Steam Power Plants - Fossil Fueled	NEESA
MIL-HDBK-1003/8A	Exterior Distribution of Utility Steam, HTW, CHW, Natural Gas and Compressed Air	WESTDIV
DM-3.09	Elevators, Escalators, Dumbwaiters, Access Lifts, and Pneumatic Tube Systems	WESTDIV
DM-3.10	Noise and Vibration Control for Mechanical Equipment (Tri-Service)	ARMY
MIL-HDBK-1003/11	Diesel Electric Generating Plants	WESTDIV
MIL-HDBK-1003/12	Boiler Controls	NEESA
MIL-HDBK-1003/13A	Solar Heating of Buildings and Domestic Hot Water	NCEL
DM-3.14	Power Plant Acoustics	ARMY
MIL-HDBK-1003/15	Air Pollution Control Systems for Boilers and Incinerators	ARMY
MIL-HDBK-1003/17A	Industrial Ventilation Systems	NEESA
MIL-HDBK-1003/19	Design Procedures for Passive Solar Buildings (Tri-Service)	NCEL

CENTRAL HEATING PLANTS

CONTENTS

			Page
Section 1		INTRODUCTION	
	1.1	Scope	1
	1.2	Cancellation	1
Section 2		POLICY	
	2.1	Economy	2
	2.2	Plant Alternatives	2
	2.2.1	Central Heating Plants	2
	2.2.2	Cogeneration	2
	2.2.3	Individual Heating Plants	2
	2.2.4	Expansion of Existing Plants	2
	2.2.5	Rehabilitation Versus Replacement	4
	2.3	Standby Facilities	4
	2.4	Steam Versus High Temperature Water (HTW) Heating Plants	4
	2.5	Fuel Selection	5
	2.5.1	Selection	5
	2.5.2	Characteristics	5
	2.6	Codes and Regulations	5
	2.6.1	Conformance	5
	2.6.2	National Industry Codes	5
	2.6.3	Safety Regulations and Requirements	6
Section 3		PLANT DESIGN	
	3.1	Plant Study	7
	3.2	Thermal Generating Equipment	7
	3.2.1	Equipment Capacity	7
	3.2.2	Minimum Load	8
	3.2.3	Operating Pressure	8
	3.2.3.1	Heating Plants	9
	3.2.3.2	Process Loads Requiring Pressures Higher than 100 psig (690 kPa)	9
	3.3	Equipment Types and Classifications	9
	3.4	Boiler Type Selection	9
	3.5	Boiler Design	13
	3.5.1	Heating Surface	14
	3.6	Plant Layout	15
	3.7	Emergency Electrical Power	16
	3.8	Feedwater Pumping System	16
	3.9	Steam Usage Considerations	16
	3.9.1	Refrigeration Units	16
	3.9.2	Steam-driven Auxiliaries	17

		Page
Section 4	HTW HEATING PLANTS	
4.1	General Requirements	18
4.2	Definitions	23
4.2.1	High Temperature Hot Water (HTW) Systems	23
4.2.2	Medium Temperature Hot Water (MTW) Systems	23
4.2.3	Low Temperature Water (LTW) Systems	23
4.3	Types of Systems	23
4.3.1	Recommended	23
4.3.2	Not Recommended	28
4.4	System Water Velocities	28
4.5	Types of Distribution Circuits	28
4.5.1	Direct-Supply, Single-Circuit	28
4.5.2	Direct-Supply, Radial	28
4.5.3	Direct-Supply, Reverse-Return	28
4.5.4	One-Pipe Loop-Main	29
4.5.5	Primary and Secondary Distribution Systems	29
4.6	Hot Water Generators	29
4.6.1	Types	29
4.6.2	Design	29
4.6.2.1	Maximum Pressure Drop through Generator	29
4.6.2.2	Steam Space	29
4.6.2.3	Tube Design	35
4.6.2.4	Equalization of Flow through Tube Circuits	35
4.6.2.5	Furnace Design	35
4.6.2.6	Blowdown	35
4.7	Efficiency	35
4.8	Pressurization	35
4.8.1	Acceptable Pressurization Methods	36
4.8.1.1	Saturated Steam	36
4.8.1.2	Inert Gas	37
4.8.2	Unacceptable Pressurization Methods	37
4.8.2.1	Elevated Tank	37
4.8.2.2	Hydraulic Pump Arrangement	38
4.8.2.3	Weighted Plunger Arrangement	38
4.8.2.4	Pressurization of the Boiler Drum	38
4.8.2.5	Combination Inert Gas and Steam Pressurization System	38
4.8.2.6	Air Pressurization System	38
4.8.3	Advantages and Disadvantages of Steam and Inert Gas Systems	38
4.8.3.1	Steam Pressurization Advantages	38
4.8.3.2	Steam Pressurization Disadvantages	39
4.8.3.3	Inert Gas Pressurization Advantages	39
4.8.3.4	Inert Gas Pressurization Disadvantages	39
4.9	Expansion Vessels	39
4.9.1	Purpose	39
4.9.2	Sizing	39

Page

4.9.3 Expansion Vessel Volume for Steam Pressurized Systems 39
4.9.3.1 Volume Required for Pressurization 41
4.9.3.2 Volume Required for Expansion and Contraction . 41
4.9.4 Expansion Vessel Volume for Gas Pressurized Systems 42
4.9.4.1 Volume Required for Pressurization 42
4.9.4.2 Volume Required for Expansion and Contraction . 42
4.9.4.3 Design Criteria for Steam Pressurized Systems . 43
4.9.5 Design Criteria for Gas Pressurized Systems . . 44
4.10 Pumps 44
4.10.1 Pump Types 44
4.10.2 Pump Acceptance Tests 45
4.10.3 Constant versus Variable Speed Pumps 45
4.10.4 Net Positive Suction Head 45
4.10.5 One-pump versus Two-Pump Systems 45
4.10.6 Single-versus Multiple-Stage Pumps 46
4.10.7 Location 46
4.10.8 Miscellaneous 46
4.11 Controls 47
4.11.1 Combustion Controls for Forced Circulation Generators with Steam Pressurized Systems . . 47
4.11.2 Combustion Controls for Forced Circulation Generators with Inert Gas Pressurized Systems 47
4.11.3 Water Flow Control for Steam Pressurized HTW Systems with Forced Circulation Generators . 47
4.11.3.1 Plants with Combination System and Boiler Circulating Pumps 47
4.11.3.2 Plants with Separate Generator Circulating Pumps in Use with System Circulating Pumps . 48
4.11.3.3 Makeup Water Flow Control 48
4.11.3.4 Automatic Isolation Valves 49
4.11.4 Water Flow Control for Steam Pressurized HTW Systems with Natural Circulation Generators . 49
4.11.5 Water Flow Control for Inert Gas Pressurized Systems 49
4.11.6 Overflow Control on Steam Pressurized Expansion Tanks 49
4.12 Piping 49
4.13 Valves 50
4.14 Space and Process Heating Equipment 50
4.14.1 Direct Heating with High Temperature Water . . 50
4.14.2 Indirect High Temperature 51
4.15 Makeup Water and Water Treatment 51

Page

Section 5	FUELS AND COMBUSTION	
5.1	Characteristics and Applications of Fuel Types	53
5.1.1	Coal	53
5.1.1.1	Heating Value (Btu/lb)	53
5.1.1.2	Agglomerating (Caking) Characteristics	53
5.1.1.3	Items of Proximate Analysis of Coal	53
5.1.2	Fuel Oil	58
5.1.2.1	Specific Gravity	58
5.1.2.2	Heating Value	58
5.1.2.3	Viscosity	58
5.1.2.4	Sulfur	58
5.1.3	Natural Gas	60
5.1.4	Wood	62
5.1.4.1	Chipped Wood	62
5.1.4.2	Bark	62
5.1.4.3	Hog Fuel	63
5.1.5	Solid Waste	63
5.1.5.1	Mass Burning	64
5.1.5.2	Refuse Derived Fuel (RDF)	64
5.2	Fuel Applications and Equipment	64
5.2.1	Applications	64
5.2.2	Coal Firing	65
5.2.2.1	Stokers	65
5.2.2.2	Pulverized Coal (PC) Firing	72
5.2.3	Oil and Natural Gas Firing	74
5.2.3.1	Gas Burners	74
5.2.3.2	Oil Burners	75
5.2.3.3	Oil Atomization	76
5.2.3.4	Recommendations	76
5.2.4	Wood Firing	77
5.2.4.1	Suspension Burning of Wood	77
5.2.4.2	Wood Stokers	77
5.2.5	Solid Waste Firing	77
5.2.5.1	Mass Burning	77
5.2.5.2	Refuse Derived Fuel (RDF)	78
5.3	Combustion Air	78
5.3.1	Combustion Air Requirements	78
5.3.1.1	Coal Firing	79
5.3.1.2	Oil Firing	79
5.3.1.3	Natural Gas Firing	79
5.3.1.4	Wood Firing	79
5.3.1.5	Solid Waste	79
5.3.2	Combustion Calculations (Example Using Coal)	79
5.3.2.1	Oxygen Required per 100 Pounds of Coal	80
5.3.2.2	Air Required per 100 Pounds of Coal	81
5.3.3	Products of Combustion	81

Page

5.4 Fuel and Ash Handling 81
5.4.1 Coal 81
5.4.1.1 Coal Delivery 81
5.4.1.2 Coal Handling Equipment 82
5.4.1.3 Coal Storage 85
5.4.2 Fuel Oil 87
5.4.2.1 Receiving and Storage 87
5.4.2.2 Oil Handling in Plant 88
5.4.2.3 Pumping 88
5.4.2.4 Blending 88
5.4.2.5 Oil Tank Heating 88
5.4.2.6 Waste Oil 89
5.4.3 Natural Gas 89
5.4.3.1 Applications 89
5.4.3.2 Metering and Meter Locations 89
5.4.3.3 Pressures 89
5.4.3.4 Venting 89
5.4.4 Wood 89
5.4.4.1 Wood Delivery 89
5.4.4.2 Wood Handling Equipment 89
5.4.4.3 Wood Storage 90
5.4.5 Solid Waste Handling 90
5.4.6 Ash Handling 90
5.4.6.1 Pneumatic Systems 90
5.4.6.2 Hydraulic Systems 91
5.4.6.3 Mechanical Systems 91
5.4.6.4 Ash Silos 91
5.4.6.5 Ash Disposal 91

Section 6 POLLUTION CONTROL EQUIPMENT AND SYSTEMS
6.1 Mechanical Cyclone Dust Collectors 92
6.1.1 Application 92
6.1.2 Construction 92
6.1.3 Performance 92
6.1.4 Design Requirements 92
6.1.5 Accessories 93
6.2 Fabric Filter Dust Collectors 94
6.2.1 Application 94
6.2.2 Advantages 94
6.2.3 Disadvantages 94
6.2.4 Types 94
6.2.4.1 Reverse Air Collector 94
6.2.4.2 Pulse Jet Collector 95
6.2.5 General 95
6.2.6 Reverse Air Collector 95
6.2.6.1 General 95

Page

6.2.6.2 Design Criteria 95
6.2.6.3 Performance 97
6.2.6.4 Construction 98
6.2.7 Pulse Jet Collector 98
6.2.7.1 Design Conditions 98
6.2.7.2 Design Criteria 98
6.2.7.3 Performance 99
6.2.7.4 Construction 99
6.2.8 Fabric Filter Media Types 99
6.2.8.1 Woven Glass 99
6.2.8.2 Felted Glass 99
6.2.8.3 Teflon 99
6.2.8.4 Other Fabric Filter Media 99
6.2.9 Flue Gas Temperature Control 100
6.2.9.1 Flue Gas Bypass Duct 100
6.2.9.2 Water Bypass System 100
6.2.9.3 Fabric Filter (Baghouse) Bypass 100
6.3 Electrostatic Precipitators 101
6.3.1 Applications 101
6.3.1.1 Coal-fired Boilers 101
6.3.1.2 Solid Waste Boilers 101
6.3.2 Advantages 101
6.3.3 Limitations 101
6.3.4 Weighted Wire Type 101
6.3.5 Rigid Frame Type 104
6.3.6 Flow Considerations 104
6.3.7 Electrical Sectionalization 104
6.3.8 Hoppers 104
6.3.9 Rapper Systems 104
6.3.10 Process Variables 104
6.3.11 Design Parameters 105
6.4 Scrubbers 105
6.4.1 Application 105
6.4.2 Dry Scrubbers 106
6.4.3 Wet Scrubbers 106
6.4.3.1 Dual Alkali Scrubber 106
6.4.3.2 Lime or Limestone Scrubbing System 109
6.4.4 Plume from Stack 109
6.4.5 Waste Disposal 109

Section 7 WATER TREATMENT
7.1 Design Considerations 112
7.1.1 Purpose of Treatment 112
7.1.2 Choice of Treatment 112
7.1.3 Chemicals and Conversion Factors Used in Water Treatment 112
7.2 General Requirements 112

Page

7.2.1	Maximum Boiler Water Limits	112
7.2.2	Boiler Water Makeup	115
7.2.3	Selection of Treatment Process	115
7.2.3.1	Methods Available	115
7.2.3.2	Selection Guide	116
7.2.3.3	Effect of Treatment	116
7.2.3.4	For Pier Side Ships	116
7.3	Blowdown	116
7.3.1	General	116
7.3.2	Types	116
7.3.3	Concentration of Dissolved Solids	118
7.3.4	Intermittent Blowdown of Steam Drum	118
7.3.5	Continuous Blowdown	119
7.3.6	Boiler Blowdown Piping and Valve Standards	119
7.3.7	Calculations	119
7.4	Internal Treatment	120
7.4.1	Function	120
7.4.1.1	Blowdown	120
7.4.1.2	Chemicals Used	120
7.4.2	Chemical Feeding Equipment	120
7.4.2.1	Mixing or Dissolving Tank	120
7.4.2.2	Feeding Schemes	124
7.4.2.3	Feeders	129
7.4.2.4	Sample Coolers	129
7.5	Ion Exchange Softening	129
7.5.1	Ion Exchange Water Softening	129
7.5.2	Sodium Cation Exchanger	132
7.5.2.1	Control	134
7.5.2.2	Computation	134
7.5.3	Sodium Hydrogen Ion Exchange Split Stream Softening	135
7.5.4	Sodium Cation Chloride Anion Conditioning	135
7.5.5	Demineralizer	135
7.5.5.1	Weakly Basic Material	135
7.5.5.2	Strongly Basic Material	139
7.5.5.3	Mixed-Bed Demineralizer	139
7.5.5.4	Demineralizer versus Evaporators	139
7.5.5.5	Sizing Demineralizers	139
7.6	Other External Treatment	139
7.6.1	Filters	139
7.6.1.1	Media	139
7.6.1.2	Size	139
7.6.1.3	Backwash	139
7.6.1.4	Coagulation	141
7.6.2	Lime-Soda Softening	141
7.6.2.1	Cold Process	141
7.6.2.2	Hot Process	141

Page

Section 8 AUXILIARY BOILER ROOM EQUIPMENT AND SYSTEMS
8.1 Scope 143
8.2 Pumps 143
8.2.1 Types 143
8.2.2 Selection 143
8.2.3 Inlet Conditions 143
8.2.4 Discharge Conditions (Pump Selection) 146
8.2.5 Discharge Control 146
8.2.6 Series and Parallel 146
8.2.7 Boiler Water Feed Pumps 146
8.3 Fans 149
8.3.1 Types 149
8.3.2 Pressurized Boilers 149
8.3.3 Balanced Draft Boilers 149
8.3.4 Forced Draft Fans 149
8.3.5 Induced Draft Fans 150
8.3.6 Fan Selection 150
8.3.6.1 Forced Draft Fan 150
8.3.6.2 Induced Draft Fan 151
8.3.7 Fan Control Methods 151
8.3.8 Additional Information 152
8.3.9 Fan Drives 152
8.4 Motors 152
8.4.1 Selection 152
8.5 Economizers 153
8.5.1 General 153
8.5.2 Applications 153
8.5.3 Design Considerations 154
8.5.4 Economizer Corrosion Controls 154
8.5.5 Heat Balance and Fuel Savings 154
8.5.6 Accessories 154
8.6 Air Heaters 156
8.6.1 General 156
8.6.2 Application 156
8.6.3 Design Considerations 156
8.6.4 Classification 157
8.6.5 Corrosion 157
8.7 Stacks 157
8.7.1 General 157
8.7.2 Stack Design 159
8.7.3 Example Stack Calculations 159
8.7.4 Ducts and Breechings 162
8.8 Compressed Air System 162
8.8.1 Types of Air Compressors 162
8.8.2 Applications and Requirement 163
8.8.2.1 Plant Air 163

Page

8.8.2.2 Instrument Air 163
8.8.3 System Components 163
8.8.4 Leakage 164
8.9 Steam Traps 164
8.9.1 Types 164
8.9.1.1 Mechanical 164
8.9.1.2 Thermostatic 165
8.9.1.3 Thermodynamic 165
8.9.2 Applications 165
8.9.3 Selection and Sizing 165
8.10 Controls 165
8.10.1 Types of Systems Available 166
8.10.2 General Rules 166
8.11 Variable Speed Drives 166
8.11.1 General 166
8.11.2 Multispeed Motor Drives 166
8.11.2.1 Two-Speed Motor Drives 166
8.11.2.2 Wound-Rotor Motors 166
8.11.3 Variable Speed Drives 167
8.11.3.1 Variable Frequency and Conventional Motor Drive 167
8.11.3.2 Steam Turbine Drives 167
8.11.3.3 Internal Combustion Engine Drive 167
8.11.3.4 Conventional Motor Drive with Hydraulic Coupling or Magnetic Coupling (Eddy Current) 167
8.11.3.5 Direct Current Power Supply and Drive Motor . . 167
8.11.3.6 Mechanical Variable Speed Drives 167
8.11.4 Application 168
8.11.5 Considerations 168

Section 9 PERFORMANCE
9.1 Boiler Inspection 169
9.2 Strength and Tightness Tests 169
9.3 Plant Operational Tests 169
9.4 Varying Load Combustion Tests 169
9.5 Steady State Combustion Tests 169
9.6 Emissions Tests 170

Section 10 MISCELLANEOUS
10.1 Insulation 171
10.1.1 Boiler Casing 171
10.1.2 Piping 171
10.1.2.1 Hot Water Piping 171
10.1.2.2 Steam and Hot Condensate Piping 171
10.1.2.3 Location 171
10.1.3 Storage Tanks 172

Page

10.1.4 Breeching and Ducts 172
10.2 Piping 172

10.3	Boiler Air Infiltration	172
10.4	Soot Blowing	172
10.4.2	Fuel Considerations	173
10.4.3	Spreader Stoker Boilers	173
10.4.4	Medium (Compressed Air or Steam)	173
10.4.4.1	Air-Puff Soot Blowers	173
10.4.4.2	Steam Soot Blowers	174
10.4.5	Operation	175
10.4.5.1	Steam Soot Blowers	175
10.4.5.2	Air Soot Blowers	175
10.4.6	Controls	175
10.4.6.1	Shop Assembled Boilers	175
10.4.6.2	Field Erected Boilers	175
10.4.7	Piping Connections for Boiler Maintenance	176
10.5	Fly Ash Reinjection on Coal-Fired Units (Cinder Return)	176
10.5.1	Advantages	176
10.5.2	Disadvantages	176
10.5.3	Operation	176
10.6	Corrosion Protection	177
10.6.1	Control Methods	177
10.6.1.1	Inorganic Materials	177
10.6.1.2	Plastics	178
10.6.1.3	Passive Metals	178
10.6.1.4	Metal Protection	178
10.6.1.5	Change of Environment	179
10.7	Water Supply	179
10.7.1	Plant Water Requirements	179
10.7.2	Plant Water Losses	184
10.7.3	Protection	184
10.8	Heating and Ventilating	184
10.8.1	Heating Boiler Rooms	184
10.8.2	Ventilating Boiler Rooms	184
10.8.2.1	Maximum Temperature and Air Changes	184
10.8.2.2	Combustion Air Inlets	185
18.8.2.3	Equipment	185
18.8.2.4	Design	185
10.9	Drainage	185
10.9.1	Diked Areas	186
10.10	Architectural Criteria	186
10.10.1	Outdoor and Indoor Steam Plants	186
10.10.2	Handicapped	187
10.10.3	Openings	187
10.10.4	Elevator	187

Page

10.10.5 Outside Fuel Storage 187
10.10.6 Personnel and Parking 187
10.10.7 Equipment Rooms 187
10.10.8 Paint Finish 187
10.11 Structural Criteria 187
10.11.1 Platforms 188
10.11.2 Hoists 188
10.11.3 Boiler Foundations 188
10.11.4 Special Considerations 189
10.12 Safety Protection 190
10.12.1 OSHA Requirements 190
10.12.2 Personnel Safety 190
10.12.2.1 Platforms and Stairs 190
10.12.2.2 Exits 190
10.12.2.3 Hoists 190
10.12.2.4 Obstruction to Air Navigation 190
10.13 Fire Protection 190
10.13.1 Coal Facilities 192
10.13.1.1 Fire Hydrants 192
10.13.1.2 Coal Bins 192
10.13.1.3 Conveyers 192
10.13.1.4 Feed Systems 192
10.13.1.5 Emptying Capability 192
10.13.1.6 CO_2 Protection 192
10.13.1.7 Automatic Extinguishing 192
10.13.1.8 Operation 192
10.13.1.9 Horizontal Surfaces 192
10.14 Electrical Criteria 192
10.14.1 Receptacles 193
10.14.2 Power Factor 193
10.14.2.1 Ratings 193
10.14.2.2 Magnetic Controllers 193
10.14.2.3 Modifications 193
10.14.3 Motor Controls 193
10.14.3.1 Criteria 193
10.14.3.2 Protection 193
10.14.3.3 Enclosures 193
10.14.3.4 Standard Motor Control Centers 194
10.14.4 Telephones 195
10.14.5 Emergency Lighting 195
10.14.6 Standby Power Generation System 195
10.14.6.1 Type of Unit 195
10.14.6.2 Emergency Generator Fuel 195
10.14.6.3 Installation 195
10.14.6.4 Operation 195
10.14.7 Intercommunication System 196
10.14.8 Hazardous Duty Rating 196

Page

10.15 Improvement and Modernization 196
10.15.1 Buildings 196
10.15.2 Boilers 196
10.15.3 Heating and Ventilation 196
10.15.4 Fuel 196
10.15.5 Fuel Storage 196
10.15.6 Coal Handling 196
10.15.7 Ash Handling 197
10.15.8 Water Treatment 197
10.15.9 Combustion Controls 197
10.15.10 Safety Controls 197
10.15.11 Instruments 198
10.15.12 Air Pollution 198
10.16 Seismic Design Criteria 198
10.17 Metering Locations 198

FIGURES

Figure 1 Format for Comparing Plant Costs 3
2 High Temperature Water System with Steam Expansion Tank (One Pump) 24
3 High Temperature Water System with Steam Expansion Tank (Two Pumps) 25
4 High Temperature Water System with Inert Gas Expansion Tank (One Pump) 26
5 High Temperature Water System with Inert Gas Expansion Tank (Two Pumps) 27
6 Direct Supply - Single Circuit 30
7 Direct Supply - Radial 31
8 Reverse Return 32
9 One-Pipe Loop-Main 33
10 Primary and Secondary Systems 34
11 Pressurized Expansion Tank Relationships . . . 40
12 Single Retort Underfeed Stoker 66
13 Vibrating Grate Stoker 67
14 Traveling Grate Stoker 69
15 Overfeed Spreader Stoker with Traveling Grate . 73
16 Gallery Detail 84
17 Conveyor Frame with Weather Cover 84
18 Double Walkway Gallery Type Frame 84
19 Ash Resistivity as a Function of Temperature . 102
20 Electrostatic Precipitator Performance 103
21 Typical Spray Dryer / Particulate Collector . . 107
22 Process Diagram for Double Alkalai Systems . . 108
23 Process Diagram for Lime / Limestone System . . 110

Page

24 Flue Gas Desulfurization System and Waste Disposal 111
25 Continuous Blowoff Piping Diagram 121
26 Arrangements for Chemical Mixing 125
27 Chemical Feed Arrangements (Schemes 1-4) . . . 126
28 Chemical Feed Arrangements (Schemes 5-8) . . . 128
29 Pot Type Feeders 130
30 Sample Coolers 131
31 Sodium - Cation Exchanger 133
32 Sodium - Hydrogen Ion Exchange Split Stream Softening 136
33 Sodium Cation Chloride - Anion Exchanger . . . 137
34 Cation - Anion Exchanger Demineralizer 138
35 Typical Vertical Steel Shell Pressure Filter . 140
36 Hot Process Softener Conical Downtake Design . 142
37 Minimum Metal Temperature for Economizers and Air Heaters 155
38 Economical Stack Diameter for a Range of Gas Flows 161
39 Required Stack Height 161
40 Relationship Between Stack Temperature and Dimensions 161
41 Friction Factor as Related to Reynolds Number . 161

TABLES

1 Plant Design Considerations 8
2 Advantages and Disadvantages of HTW Plants and Steam Plants 10
3 Boiler Selection Criteria 12
4 Maximum Flue Gas Velocities (FPS) in Convection Sections for Coal, Wood, or Solid Waste Boilers 15
5 Influence of Temperature Difference on Selection of Pumps and Pipe Sizes for HTW Systems 18
6 Equipment Selection for HTW Systems 19
7 Analyses of Typical U.S. Coals, as Mined . . . 54
8 Typical Analyses and Properties of Fuel Oils . 59
9 Lowest Suitable Pumping Temperatures 60
10 Typical Analyses of Natural Gas 61
11 Available Energy in Wood 62
12 Typical Analyses of Dry Wood Fuels 63
13 Heating Values and Composition of Typical Unprepared and Prepared American Solid Waste 64

Page

14 Stoker Selection Criteria 70
15 Typical Flyash Analysis for a Spreader Stoker 93
16 Effects of Inadequate or Improper Water Conditioning 113
17 Suggested Water Quality Limits for Boiler Water and Feedwater up to 300 psig 114
18 General Guide for Raw Water Treatment of Boiler Water Makeup 117
19 Effectiveness of Water Treatment 118
20 Chemicals for Internal Boiler Water Treatment 122
21 Makeup Water Analysis 132
22 Summary of Operating Performances of Pumps . . 144
23 Preferred Generic Protective Coatings for Corrosion Control 180
24 Inorganic Inhibitors and Corrosion Systems . . 183
25 Standard Motor Control Enclosures 194

REFERENCES 199

Section 1: INTRODUCTION

1.1 Scope. This handbook contains data and information as criteria that shall govern the design of steam and high temperature water (HTW) central and individual heating plants. The primary purpose of these plants is to generate steam and high temperature water for space heat and process steam in the most economical, operationally efficient, and environmentally acceptable manner possible for distribution to groups of buildings on shore installations.

1.2 Cancellation. This military handbook, MIL-HDBK-1003/6, cancels and supersedes NAVFAC DM-3.06, Central Heating Plants of April 1985.

Section 2: POLICY

2.1 Economy. New heating plants at shore installations shall be designed to meet application requirements for the lowest overall ownership, operation and energy consumption costs during their life span. The application of any facility must be justified by an economic analysis to ensure the most appropriate facility at the lowest overall cost to the Government. The economic analysis for new or modified plant construction projects shall consider all suitable alternatives to determine the most cost-effective method of accomplishment. Figure 1 provides a list of cost considerations for comparing alternative plants. All economic analyses shall follow the policy and procedures as outlined in SECNAVINST 7000.14, Economic Analysis and Program Evaluation for Navy Resource Management. For information and guidance in performing a detailed cost analysis refer to NAVFAC P-442, Economic Analysis Handbook.

2.2 Plant Alternatives

2.2.1 Central Heating Plants. These plants are for groups of buildings which are existing or anticipated within a five year program. Central heating plants are justified when the distribution system will have a lower life cycle cost than other alternatives.

2.2.2 Cogeneration. Plants which generate electric power and heat (cogeneration) can be utilized when an economic analysis determines lower life cycle costs than other alternatives.

2.2.3 Individual Heating Plants. Individual plants are typically inside or adjoin the building they serve. Individual plants are considered when economically justified and for the following reasons:

a) When installation and maintenance of an extension of the distribution system from a central plant to an isolated building is not economically justified.

b) When dispersal of facilities and continuity of services are so essential that disruption of service by any damage to the central heating plant and connecting distribution system cannot be tolerated.

c) When fuel costs are paid by occupants of residence or family quarters.

2.2.4 Expansion of Existing Plants. Additional steam capacity, including reserve capacity for loads expected within five years, may be added to an existing central heating plant. An economic study must show that modifications and additions to an existing plant and distribution system will be more cost effective than other alternatives.

Items	Central Steam Plant	Central HTW Plant	Individual Plants
Boilers			
Burners			
Stokers			
Economizer or Air Heater			
Forced and Induced Draft Fans and Drives			
Fuel Storage & Fuel Handling			
Fire Protection Systems			
Ash Handling			
Metering, Scales, etc			
Deaerating Heaters			
Condensate Receiver and Pumps			
Boiler Feed Pumps and Drives			
Feedwater Treatment System			
Combustion and Feedwater Controls			
Burner Management System			
Piping Systems with Valves and Fittings			
Steam or HTW Return			
Condensate or HTW Return			
Feedwater & Air			
Stacks, Breeching, Dampers and Accessories			
Air Pollution Control Equipment			
Compressed Air System			
Blowdown Systems			
Plant Building			
Equipment Foundations			
Electric Work			
Emergency Generator			
Sanitary Work			
Space Heating and Ventilating			
Contingency, Overhead and Profit			
Total Investment Cost			
Annual Owning Cost			
Annual Fuel Cost			
Annual Electrical Cost			
Annual Distribution Losses			
Annual Distribution System Maintenance			
Annual Disposal Costs			
Annual Operation and Maintenance Materials			
Annual Operation and Maintenance Labor			

Note: Make similar comparison for each fuel under consideration

Figure 1
Format for Comparing Plant Costs

2.2.5 Rehabilitation Versus Replacement. If an existing plant has deteriorated to the point of producing numerous outages, is becoming a safety hazard or is not in compliance with air pollution regulations, its rehabilitation or replacement will be determined by a life cycle economic analysis. If replacement is determined to be the most cost effective then the capacity of the modern plant is required to handle any additional projected load. Necessary equipment and systems for air pollution regulation compliance and other operating, safety or maintenance deficiencies must be included for either the rehabilitated plant or replacement plant.

2.3 Standby Facilities. A standby facility is a facility which is redundant to the primary facility and maintained to operate in the event the primary facility becomes inoperable. A standby facility will be considered only when:

a) A crucial need exists and redundant equipment and systems in the primary facility will not provide required or necessary reliability of continuous operation.

b) An outage could endanger life or property, or seriously interfere with the mission of an activity.

c) The financial loss to the Government from a reasonable outage schedule will be greater than the costs of standby equipment.

d) The consumer load is sufficiently critical as determined by NAVFACENGCOM Headquarters (Code 04).

When a replaced plant is considered for a standby facility it shall be made suitable for operation in conformance with safety and clean air regulations.

2.4 Steam Versus High Temperature Water (HTW) Heating Plants. Central steam heating plants shall be utilized unless a thorough analysis dictates that a HTW plant is preferable. The following factors will be among those considered in the analysis:

a) Economic advantages of thermal storage of the HTW system in sizing of equipment such as boilers, pumps and piping.

b) Operating and maintenance costs of HTW distribution system versus steam distribution system.

c) Pressure and temperature requirements provided economically by steam or HTW.

d) Cost of replacement or renovation of existing plant and distribution system compared with construction of new plant and/or distribution system. A comparison will be on a life cycle basis. The analysis must indicate a system change is economical before change is made.

e) Prevalence of skilled plant operators in the area. This is critical in remote locations. HTW system operators require more skill to make the system operate efficiently.

f) Complexity of controls and ability of system to maintain fluctuating or constant temperature conditions through the assigned or existing heat transfer equipment.

2.5 Fuel Selection

2.5.1 Selection. Refer to MIL-HDBK-1190, Facility Planning and Design Guide, NAVFACINST 10343.1A, Navy Special, Navy Distillate and Marine Diesel Fuel Oils; On-Shore Use of, NAVFACINST 10340.4C, Coal Requirements and Requisitions, OPNAVINST 4100.6, Energy Financing and Source Selection Criteria for Shore Facilities, and Navy policy on selection of fuels. Select fuels which are within the National guide lines and which produce the required performance at lowest life cycle costs. The fuel policy has been to use a solid domestically produced fuel as a primary fuel for heating plants of medium size and above except where use of a solid fuel is not feasible because of geographic considerations. Existing plants burning fuel oil or gas may continue to burn fuel oil or gas. New or replacement boilers in plants with design input over the threshold minimum established by Government policy, are required to burn solid fuel. Another fuel may be used when the primary fuel is not available or where it is critical to keep the steam plant in operation on an emergency basis.

2.5.2 Characteristics. For properties of various fuels, characteristics of handling equipment, and types of firing equipment, refer to Section 5. When oil is used the boiler should be capable of conversion to grades No. 2 through No. 6 oil.

2.6 Codes and Regulations

2.6.1 Conformance. It is mandatory for the Federal Government to conform to Federal, State, and local air and water pollution abatement codes. Section 6 provides information on selecting pollution control equipment and systems.

2.6.2 National Industry Codes. Where applicable, design shall conform to the industry codes including the following:

a) American Society of Mechanical Engineers (ASME), Boiler and Pressure Vessel Code,

b) American National Standards Institute (ANSI) Standards,

c) American Petroleum Institute (API),

d) National Board of Boiler and Pressure Vessels (NBBI), Inspection Code,

e) American Society of Heating, Refrigerating and Air-Conditioning Engineers (ASHRAE),

f) American Society for Testing and Materials (ASTM),

g) American Welding Society (AWS),

h) American Institute of Plant Engineers (AIPE),

i) National Association of Power Engineers (NAPE),

j) National Association of Corrosion Engineers (NACE),

k) National Fire Protection Association (NFPA),

l) Air and Waste Management Association (AWMA),

m) American Institute of Chemical Engineers (AICHE),

n) American Institute of Mining, Metallurgical, and Petroleum Engineers (AIME).

2.6.3 Safety Regulations and Requirements. Refer to para. 10.12 and 10.13.

Section 3: PLANT DESIGN

3.1 Plant Study. A plant study shall be conducted before authorization to develop definitive designs is provided. The study will evaluate plant operating parameters with a primary emphasis on economic factors. Major emphasis will also be given to energy conservation and environmental concerns. The documented study shall determine:

a) Plant load and operating characteristics,

b) Fuels to be burned,

c) Required dependability of service,

d) Predicted lifespan of the plant,

e) Estimated cost (Capital and operating),

f) Required pollution abatement equipment.

Figure 1 provides the predominant costs which affect the plant. It may be used as a basis for comparing plant alternatives. Table 1 provides a list of predominant design considerations for design of thermal plants.

3.2 Thermal Generating Equipment

3.2.1 Equipment Capacity.

The combination of number and size of thermal generating equipment in a plant determines the plant capacity. A plant may be installed with a single boiler able to provide the required plant capacity for applications where loss of the boiler will not adversely affect the operation. Most applications cannot tolerate the complete loss of a thermal plant. These applications require that two boilers provide 135 to 150 percent of the plant's maximum steam demand. The continuous capacity of the plant with a boiler not operating shall be greater than the essential plant load. A spare boiler may be needed to provide the necessary backup.

The recommended method for selecting the number of boilers in this situation is to use three equal capacity boilers which can each carry 50 percent of the maximum load. A variation of this scheme is to use two equal capacity boilers each capable of providing two thirds of the maximum load and a smaller boiler capable of carrying one third of the maximum load. The maximum steam plant demand shall not require operation of more than three simultaneously fired boilers. A smaller peaking and off-season boiler should be included if increased efficiency at low loads economically justifies the installation. Avoid installation of initial main boilers whose capacities are smaller than those to be added when the plant is expanded. Avoid unnecessarily large numbers of small boilers.

Table 1
Plant Design Considerations

FACTOR	EFFECT
Load Characteristics	Affects number, size, and type of boilers. Boiler performance requirements. (Turn down ratio and response to load swings.)
Fuels	Affects type of boiler fuel handling and pollution control equipment required.
Availability of water	Affects type of water treatment required.
Electric Service	Affects type of auxiliaries. Will require emergency generator if continuous service is critical.
Plant Location	Building cost; altitude affects air density and stack height. Local regulations affect type of fuel and required pollution abatement equipment.

3.2.2 Minimum Load. The plant shall operate efficiently at minimum loads. The following variables can be manipulated to meet minimum load requirements:

a) Type of fuel and method of combustion. This will determine operating ranges of combustion control turn-down which may range from 8:1 to 3:1. The boiler turn-down must include the minimum load. By changing burner tips in oil firing, low minimum loads can be obtained.

b) Number of boilers. More smaller boilers will lower the minimum plant capacity. This option should not be considered if plant would require more than four equal capacity boilers.

c) Minimum load boiler/boilers. Where the difference between a minimum plant steam demand and minimum boiler load with main boilers is large, a small, packaged boiler unit with its own boiler feed pumps should be used to provide low plant capacities.

3.2.3 Operating Pressure. Select a plant operating pressure which provides adequate pressure at any user outlet and allows for the pressure drops through piping in the building, distribution system, boiler plant, and the dry piping in the boiler steam drum. Boiler design pressure should be 250 psi (1725 kPa) minimum for all water tube boiler applications. For all other applications, the design pressure should be determined in accordance with the ASME Boiler and Pressure Vessel Code. Modify pressures when it is economical and practicable to distribute steam at pressures below or above those indicated by this manual.

3.2.3.1 Heating Plants. Heating plants normally do not require operating steam pressures over 150 psig (1035 kPa). Lower pressures have smaller heat losses from distribution piping. Cast iron valves can be used up to 125 psig (862 kPa) but steel valves are required between 125 psig (862 kPa) and 150 psig (1035 kPa) unless 250 psig (1725 kPa) class cast iron valves are used. For this reason, the recommended operating pressure range is 100 psig (690 kPa) to 125 psig (862 kPa) for maximum economy of distribution piping including valves and fittings. When the maximum plant and distribution loads are large and the most remote terminal requirements cannot be satisfied with sufficient quantities of steam, combinations of higher pressures and related pipe sizes should be analyzed to compare installation and operating costs of various steam pressures up to 250 psig (1725 kPa) (the next higher pressure rating of cast iron valves).

3.2.3.2 Process Loads Requiring Higher Pressures than 100 psig (690 kPa). When a process load is required in excess of 100 psig (690 kPa) an economic analysis should determine whether steam should be generated and distributed at the pressure required at the process, distributed at two pressure levels, or generated at the higher pressure locally by a separate heating plant as needed.

3.3 Equipment Types and Classifications. Watertube and firetube boilers are the two general types of boilers available. The boilers are also classified as either high pressure or low pressure and whether they produce hot water or steam.

A high pressure boiler is a boiler which operates at pressures above 15 psig (103 kPa). The advantage of the high pressure boiler is reduced boiler size and distribution piping required to equal the capacity of a low pressure boiler. Most large capacity boilers are high pressure boilers. A hot water boiler is a misnomer since the water does not boil. A high temperature water (HTW) boiler is a hot water boiler which produces water at temperatures higher than 250 degrees F (121 degrees C). Special considerations for hot water boilers are discussed in Section 4.

Other classifications for boilers are type of fuel and method of firing. Burners and stokers are the two general methods of firing with further categories of these types of firing schemes.

3.4 Boiler Type Selection. Once the operating parameters (load, fuel, etc.) have been determined, the type of boilers which will provide the best operating characteristics shall be selected. Table 2 lists the advantages and disadvantages of high temperature hot water boilers versus steam boilers. Section 4 contains additional design requirements for high temperature hot water boilers. Table 3 lists acceptable boiler types and criteria to consider when selecting the type and possible pollutants to control. Pollution control equipment will be a major cost factor when evaluating the most cost effective alternative.

Table 2
Advantages and Disadvantages of HTW Plants and Steam Plants

High Temperature Water Advantages	Steam Advantages
1. Minimal system water loss; therefore makeup primarily required for losses from pump glands, valve packing, expansion tank overflow.	1. Steam system operation more familiar to most operators.
2. Supply and return water thermal energy is retained in system and not lost through leaking traps, condensate losses, PRV stations and flashing.	2. Less pumping horsepower required.
3. If desirable or necessary, heat storage in system will allow continued operation for a period of time after heat input has been cut off.	3. Provides energy for uses other than heating; i.e., turbine driven equipment.
4. Temperatures of the HTW and space conditions can be closely controlled.	4. Fewer and less complicated controls.
5. Systems will respond to quick load swings.	5. Usually considered safer due to possibility of highly dangerous rupture with HTW.
6. Heat storage (fly wheel) effect can can reduce size of HTW generators.	
7. Water treatment requirements are minimal in closed circulation loop systems.	
8. No deaeration required.	
9. No steam traps or pressure reducing stations required.	
10. Distribution system can more nearly follow natural topography.	
11. Boiler blowdown not required for HTW generators.	

Table 2 (continued)
Advantages and Disadvantages of HTW Plants and Steam Plants

High Temperature Water Disadvantages	Steam Disadvantages
1. Primary and secondary pumping required to assure proper heat distribution.	1. Condensate losses in distribution range from 12 to 25 percent minimum.
2. Proper operation of system depends on artificial pressurization. Loss of pressurization causes shutdown.	2. Oxygen and bicarbonates in the feedwater can result in corrosion in the condensate pipe. Adequate water treatment is required to prevent premature failure of the condensate system.
3. Steam driven auxiliaries not practicable.	3. Steam boiler requires expensive steam drum, extensive feedwater system.
4. Strainer or sediment trap required at inlet to generator to prevent solid impurities from entering the generator.	4. Inadequate pressure at end of steam main will cause insufficient quantity of steam for user.
5. Flashing of water on reduction of pressure in piping system can cause cavitation and water hammer.	5. Generally requires more excavation for underground systems due to required pitch of lines.
6. Water flashing to steam on rupture can result in an extremely violent and dangerously explosive action throughout the system.	6. Valves, traps, and strainers are sources of steam loads.
7. Under constant flow conditions, high return-water temperatures can result at low load conditions, thus causing additional thermal losses.	
8. Heat exchangers are usually required at end usages of HTW.	

Table 3
Boiler Selection Criteria

Boiler Type	Fuel	Typical Capacity Range	Possible Emissions to Control	Characteristics
Fire tube (packaged)	Oil	350 - 35,000 lb/hr	NOx, SOx, toxics	Low Cost; typically fully automatic; low pressure (300 psig max); has salvage value; small space requirements; easily transported.
	Gas	350 - 35,000 lb/hr	NOx	
	Unfired	350 - 35,000 lb/hr	Dependent on process fuel	Requires reliable heat source greater than 600 degrees F.
Watertube (shop assembled)	Oil	100 - 150,000 lb/hr	NOx, SOx, toxics	Low Cost; can be high pressure; movable; smaller space requirements then field erected.
	Gas	100 - 150,000 lb/hr	NOx	
	Unfired	100 - 35,000 lb/hr	Dependent on process fuel	
Watertube (field erected)	Gas	20,000 - No Limit	NOx	
	Oil	20,000 - No Limit	NOx, SOx, Toxics	
Stokers	Coal	20,000 - No Limit	NOx, SOx, toxics, particulate	Are typically more economical for boiler loads below 100,000 lb/hr; not responsive to load swings.
	Wood	20,000 - No Limit	NOx, toxics, particulate	

Table 3
Boiler Selection Criteria (continued)

Boiler Type	Fuel	Typical Capacity Range	Possible Emissions to Control	Characteristics
	RDF	2,000 - No Limit	NOx, toxics, particulate	
Pulverized Coal	Coal	50,000 - No Limit	NOx, SOx, toxics, particulate	High energy and maintenance requirements; economical for capacities over 100,000 lb/hr.
Fluidized Bed	Coal	50,000 - No limit	Toxics, particulate	High capital and and maintenance cost
	Wood	20,000 - No Limit	Toxics, particulate	
	RDF	20,000 -	Toxics, particulate	
High Voltage	Electric	No limit - 150,000 lb/hr	None	Convenient; low capital cost; small space requirements
	Electric	No Limit - 50,000 lb/hr	None	

3.5 Boiler Design. Boiler design is primarily dependent on the fuel and type of firing. Both furnace heat release rate and EPRS are factors which determine distribution of heat within the furnace. Proper values must be maintained to keep local absorption to a minimum and avoid "hot spots." The primary criteria for design are based on the following:

a) Furnace heat release rate -- the volumetric heat release rate is the Btu input rate per cubic foot of furnace volume

b) Effective Projected Radiant Surface (EPRS) -- the portion of the furnace in square feet which is exposed to radiant heat of the flame,

c) Grate heat release rate (for stoker boilers)

d) Flue gas velocities through tube banks

e) Tube spacing

3.5.1 Heating Surface. Computations of effective radiant heating surface for water tube boilers are based on the following:

a) Bare, metal-covered, or metallic-ore-covered tubes and headers-projected area (external diameter times length of tube) of the tubes or header.

b) Extended surfaces (metal and metallic surfaces extending from the tubes or headers): sixty percent of the flat projected area, except that metal blocks not integral with tubes or headers, extended surfaces less than 1/4 inch (6 mm) thick or more than 1-1/4 inch (31 mm) in length, and the part of the extended surface which is more than one tube or header radius from the tube or header from which it extends are not included.

c) Furnace exit tubes -- the projected areas of those portions of the first two rows of exit tubes receiving radiant heat from the fire.

d) Grate heat release rate -- This burning rate is the higher heating value in the coal used per hour at rated boiler capacity divided by the total active burning area of the stoker grate. Maximum values are provided in Section 5, Table 12. These values are based on the assumption that furnace walls are water cooled, that there is adequate furnace volume, and that the most desirable type of coal for the unit is used. In the absence of these conditions, values should be reduced to ensure satisfactory combustion. A high grate heat release rate will cause high carbon loss and increased particulate emissions.

e) Flue gas velocities through tube banks -- Gas and light oil flue gas velocities are typically determined by the need to limit draft losses. Coal, wood or solid waste boilers need to limit flue gas velocities to prevent undue erosion of boiler convection tubes. The gas velocities through the convection section of these boilers shall not exceed velocities shown in Table 4.

f) Tube Spacing -- Tube spacing is governed by the amount of deposits which will accumulate. Spacing is not critical for boilers firing gas or distillate oil. Boilers firing solid fuels or residual oil need proper spacing and proper soot blowing arrangement to limit deposit buildup on tubes, poor heat distribution, poor efficiencies and premature tube failures.

Table 4
Maximum Flue Gas Velocities (Feet Per Second) in Convection Sections for Coal, Wood or Solid Waste Boilers

	Single Pass Water Tube			Multi-Pass Water Tube
	Coal	Wood	Solid Waste	Coal
Pulverized coal	50			60
Underfeed stoker	75			60
Spreader stoker traveling grate	60	50 (1)		50
Spreader stoker traveling grate	60	50		50
Traveling grate (front gravity feed)	75			60
Solid waste			30	

(1) If wood has sand, use 35 fps.

3.6 Plant Layout. The plant layout should be designed to reduce maintenance time, and allow for easy operation of equipment.

Future situations to consider include:

a) Tube cleaning

b) Tube replacement

c) Future expansion

d) Conversion fuels

Tube replacement for firetube boilers typically requires a space in front of the boiler which is equal to the boiler's longest length. If there is a possibility of future conversion of firing equipment to another fuel, provide space for the installation and operation of such equipment and for local storage and handling of the new fuel. Enough room shall be provided to accommodate all auxiliaries such as feed pumps, fuel pumps, condensate tank water heaters, deairators, condensate receivers and other equipment normally located in the boiler room.

3.7 Emergency Electrical Power. Minimum emergency electric power. When steam-driven auxiliaries are used, provide emergency electrical power generation to start up the plant and operate the following essential services until steam pressure is reestablished:

a) Coal and ash handling, coal firing, emergency lighting, instrument compressors, combustion management controls, flame safeguard controls, control valves, control room ventilation and other essential operation requirements including the auxiliaries for one boiler.

b) Emergency electric power shall be provided for all essential services including plant auxiliaries. Minimum emergency electrical power shall be that which is capable of allowing the plant to generate steam sufficient to serve essential load.

3.8 Feedwater Pumping System. The ASME Boiler and Pressure Vessel Code (Section 1, Paragraph PG-61) requires that boilers having more than 500 square feet of water heating surface and firing a solid fuel not in suspension be provided with two means of feeding water. It is recommended that all coal-stoker fired boilers with a capacity above 100,000 lbs per hour (12.6 kg/s) should have dual feedwater systems containing separate headers, check valves, isolating valves, and regulating valves for operation flexibility and emergency. All coal-stoker fired coal boilers 20,000 lbs per hour (2.52 kg/s) and above shall have a steam turbine-driven boiler feed pump and a motor-driven boiler feed pump per boiler. Provide the steam turbine-driven boiler feed pump (plant size) with emergency treated water connection for coal-stoker fired plants.

3.9 Steam Usage Considerations. Consider uses for secondary steam to determine ways to operate a plant more effectively. Several possible ways of using steam for more economical operation are:

a) Fuel oil tank heating coil

b) Water heaters

c) Absorption type of refrigeration machines

d) Space heating

3.9.1 Refrigeration Units. Addition of refrigeration units to a plant design should be considered where heating plant steam can be used during summer to serve refrigeration machines. Chilled water produced by steam absorption or steam turbine-driven refrigeration compressors can be distributed economically to buildings for space cooling. A combined plant saves considerable building cost. The addition increases annual plant load and may reduce owning and operating cost.

Turbine driven equipment can be economical if there is use for low pressure exhaust steam. Absorption refrigeration equipment does not work efficiently at low loads. If absorption equipment is not a significant load it is advisable to utilize electric driven centrifugal equipment. This eliminates need for low pressure summer steam and saves distribution costs, line losses, fuel and manpower.

3.9.2 Steam-driven Auxiliaries. A comparison, similar to that outlined in Figure 1, shall be made for owning and operating steam-turbine- versus electric-motor-driven rotating equipment. Consider amounts of condensate returned, possible waste of exhaust steam to the atmosphere, and number of operating hours using steam-driven instead of motor-driven equipment. Reliability and continuity of service during power outages should also be factors when determining the most cost effective alternative. Steam-driven auxiliaries may be provided in lieu of, or in conjunction with, electric-motor-driven units. Possible auxiliaries which can utilize steam drives include feed pumps, condensate pumps, induced draft fans, forced draft fans, air compressors, overfire air fans and fuel oil pumps. In all cases sufficient electric-motor-driven units must be provided to permit cold start-up of the boiler plant.

Section 4: HTW HEATING PLANTS

4.1 General Requirements

a) Design engineers should be selected on the basis of their past experience with HTW system design.

b) The design engineering firm selected should prepare a detailed economic analysis of comparable steam and HTW systems before a decision is made to use either system.

c) One of the main advantages of HTW compared to steam systems is the smaller pipe sizes and pumps required due to the tremendous thermal storage of water. Table 5 shows the influence of temperature differentials on pipe and pump size. The minimum temperature differential recommended is 100 degrees F (55.5 degrees C). The preferred temperature differential range is 120 to 150 degrees F (66.6 to 83.3 degrees C).

d) Refer to Table 6, for information on types of equipment and their application.

Table 5
Influence of Temperature Differentials on Selection of
Pumps and Pipe Sizes for HTW Systems

Temperature difference	◦F	20	50	100	150	200
Discharge temperature	◦F	270	300	350	400	450
Return temperature	◦F	250	250	250	250	250
Mean temperature	◦F	260	275	300	375	350
Flow rate per 20 (Million BTU/hr) MMBH	lb/hr	1,000,000	400,000	200,000	133,000	100,000
Density of returning water	lbs/gal	7.86	7.86	7.86	7.86	7.86
Pump capacity	GPM	2,125	850	425	283	212.5
Assumed pump head	ft	100	100	100	100	100
Pump HP required	HP	84.0	33.6	16.8	11.2	8.4
Pump efficiency	%	60	60	60	60	60
Pump size (Assumed head loss 10'/100')	I.P.S.	8"	6"	4"	3-1/2"	3"

Table 6
Equipment Selection for HTW Systems

Equipment	Type or Use	Pertinent Information
HTW Generators for new plants to 500 psig and to 470 ◦F.	Field-erected steel watertube with no steam space.	Forced circulation HTW plants of small-to-large size. Generator design pressure 100 psi above that of expansion tank. Manufacturer must prove that method of controlling circulation in tube circuits is satisfactory. Do not permit extended surface in convection section. Consider space requirements of generators of several different manufacturers in plant layouts. Set safety valve 50 psig over expansion tank safety valve discharge setting.
Boiler furnace (maximum heat input per square foot of effective radiant heating surface).	125,000 Btu/hr	For oil or gas firing. Limit furnace size to flame clearance.

Table 6 (continued)
Equipment Selection for HTW Systems

Equipment	Type or Use	Pertinent Information
	95,000 Btu/hr	For coal of 2,200 deg F or less ash fusion temperature. Spreader stoker w/traveling grate over 25,000,000 Btu/hr output.
	105,000 Btu/hr	For coal over 2,200 deg F ash fusion temperature. Spreader stoker w/traveling grate over 25,000,000 Btu/hr output.
Coal fired HTW generator grate area		See stoker selection criteria. Furnace exit gas temperature not to exceed 2200 deg F or go 100 deg F below the ash fusion temperature.
Air heater	Tubular or regenerative	When economically justified. Check safe metal temperature for sulfur content of fuel. Max. air temp. for coal stoker is 300 deg F.
Economizers	Not economically justified.	In counter-flow designs of forced circulation boilers, convection section of boiler acts as economizer.
Sootblowers	Compressed Air	Coal or oil HTW generators. Not required for gas fuel.
Expansion tank		Design pressure to be at least 50 psig above operating pressure.

Table 6 (continued)
Equipment Selection for HTW Systems

Equipment	Type or Use	Pertinent Information
HTW pumps	350 deg F to 420 deg F maximum temperature and 1750 RPM or over.	Mechanical seals with heat exchanger for cooling the water to cool face temperature of the seals to 140 deg F max. Alloy steel impellers (min. of 11% chromium). Stainless steel shafts, sleeves and pump trim. Ball or roller bearings, oil lubricated. Stuffing box seals water-cooled.
Makeup pumps		
Up to 15 gpm	Motor-driven reciprocating pumps.	Pump discharge pressure shall be sufficient to deliver water to the system at 3% over the highest safety valve setting according to Section I of the ASME Boiler Pressure Vessel Code. The safety valves are generally set at not more than 6% over the maximum pressure to which the system may be subjected.
Over 15 gpm	Motor driven centrifugal multistage or reciprocating pumps.	

Table 6 (continued)
Equipment Selection for HTW Systems

Equipment	Type or Use	Pertinent Information
Converters	Tubes and sheets of copper nickel, admiralty metal or heavy gauge steel. Tube expanded and rolled into sheets, not welded.	1. For secondary hot water pumping system. 2. Temp. differences between leaving HTW of primary system and leaving hot water of secondary system should be not less than 30 deg F. 3. Use fouling factor of 0.0005 on secondary side.
Radiant panels or convectors	Heating of industrial-type buildings.	Direct utilization of HTW.
Unit heaters and air handling coils	Heating and ventilating industrial type buildings. Sufficient continuous flow of HTW through coil to prevent freezing, not less than 0.5 gpm.	Select coils for circuiting, due to high water temp. drop and air stratification on air-leaving side.
Steam generators	Generation of steam for heating, atomizing oil burners and process.	Use fouling factor of 0.0001 on steam side. Temp. difference between leaving HTW and steam temp. should not be less than 30 deg F to 40 deg F. Vapor disengaging velocity under 3 ft/s

4.2 Definitions

4.2.1 High Temperature Hot Water (HTW) Systems. HTW systems are designed to operate at export temperatures of 350 to 420 degrees F (177 to 215.5 degrees C). Generally 400 degrees F (204.5 degrees C) is considered as a maximum design temperature due to high pressures and the relative costs to achieve pressurization. The system pressure must be at least 25 psi (172 kPa) above the saturation pressure of the HTW maximum temperature to prevent pump cavitation and flashing of superheated water to steam. A system operating at a maximum temperature of 350 degrees F (177 degrees C) requires at least 160 psia (1104 kPa) pressure and a system operating at a maximum temperature of 400 degrees F (204.5 degrees C) requires a minimum pressure of 275 psia (1898 kPa). The maximum system temperature drop from export temperature to return temperature should be 100 to 150 degrees F (55.5 to 83.33 degrees C). High temperature differentials in the HTW system can reduce distribution piping sizes and distribution pumping costs by requiring less water flow for the heat required. However, as the temperature differential is increased the system heat storage capacity is reduced.

4.2.2 Medium Temperature Hot Water (MTHW) Systems. MTHW systems are designed to operate at an export temperature between 250 and 350 degrees F (121 to 177 degrees C), with a maximum temperature drop of 75 to 100 degrees F (41.7 to 55.6 degrees C). The system pressure must be pressurized at least 25 psig (172.5 kPa) above the saturation pressure to prevent pump cavitation and flashing to steam.

4.2.3 Low Temperature Hot Water (LTHW) Systems. LTHW systems are designed to operate at an export temperature between 150 and 250 degrees F (65.6 and 121 degrees C). Systems above 180 degrees F (82.2 degrees C) must be pressurized to prevent pump cavitation.

4.3 Types of Systems

4.3.1 Recommended

a) Forced circulation hot water generators, separate expansion vessel, steam pressurization, single pump. See Figure 2.

b) Forced circulation hot water generators, separate expansion vessel, steam pressurization, double pump. See Figure 3, at low loads, pressurization is greatly effected by increased temperatures.

c) Forced circulation hot water generators, separate expansion vessel, inert gas pressurization, single pump. See Figure 4.

d) Forced circulation hot water generators, separate expansion vessel, inert gas pressurization, double pump. See Figure 5.

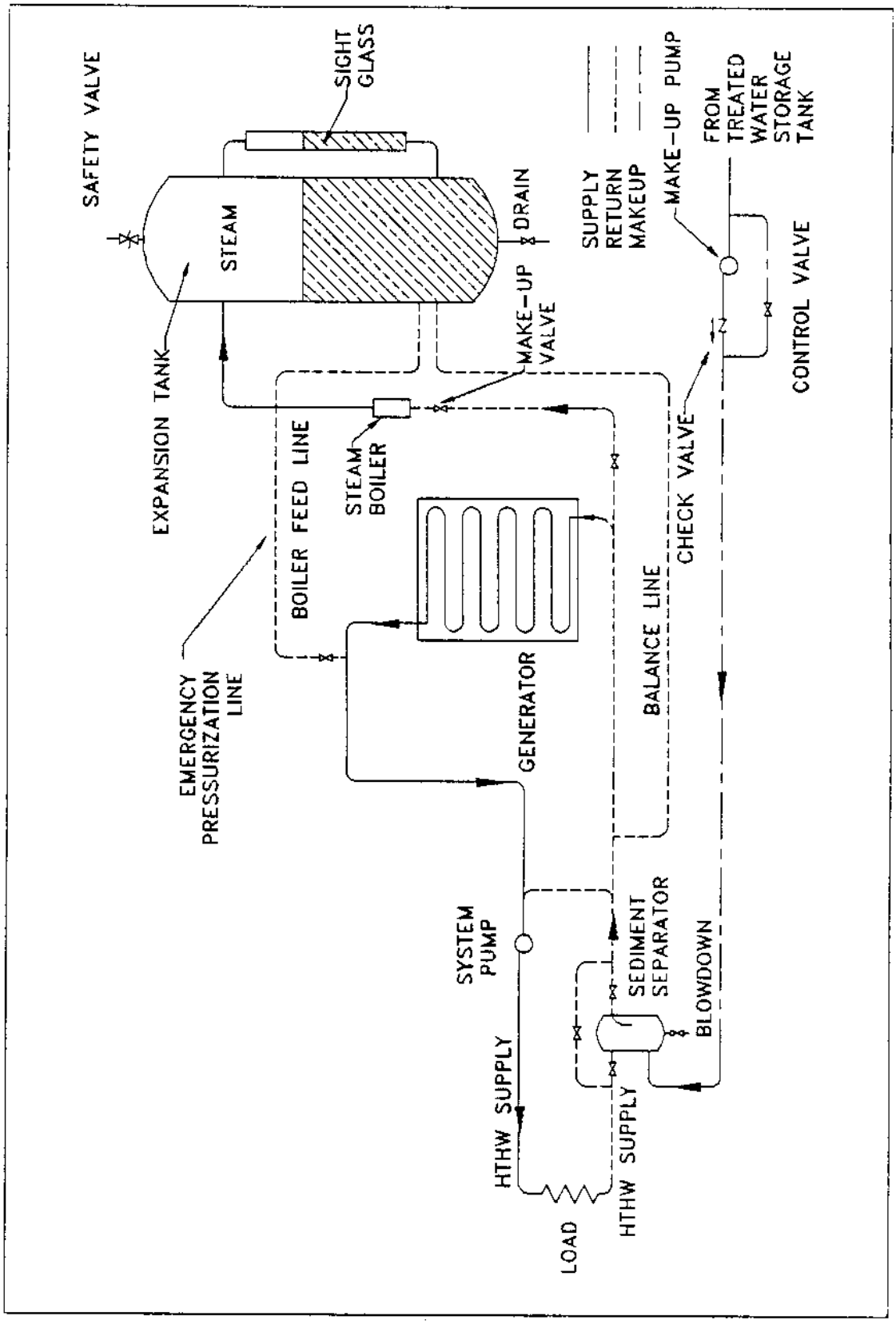

Figure 2
High Temperature Water System with Steam Expansion Tank (One Pump)

Figure 2
High Temperature Water System with Steam Expansion Tank (One Pump)

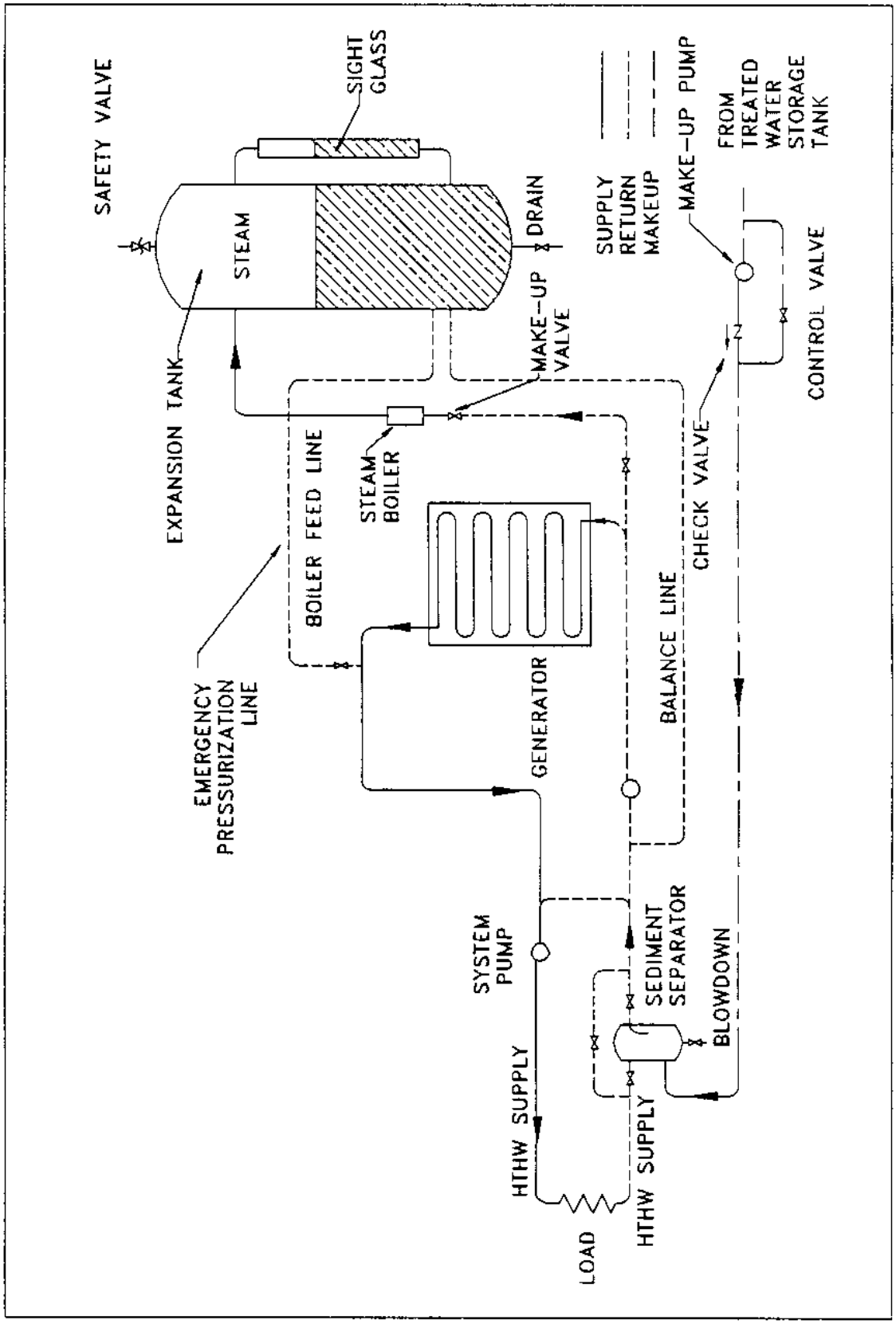

Figure 3
High Temperature Water System with Steam Expansion Tank (Two Pumps)

Figure 3
High Temperature Water System with Steam Expansion Tank (Two Pumps)

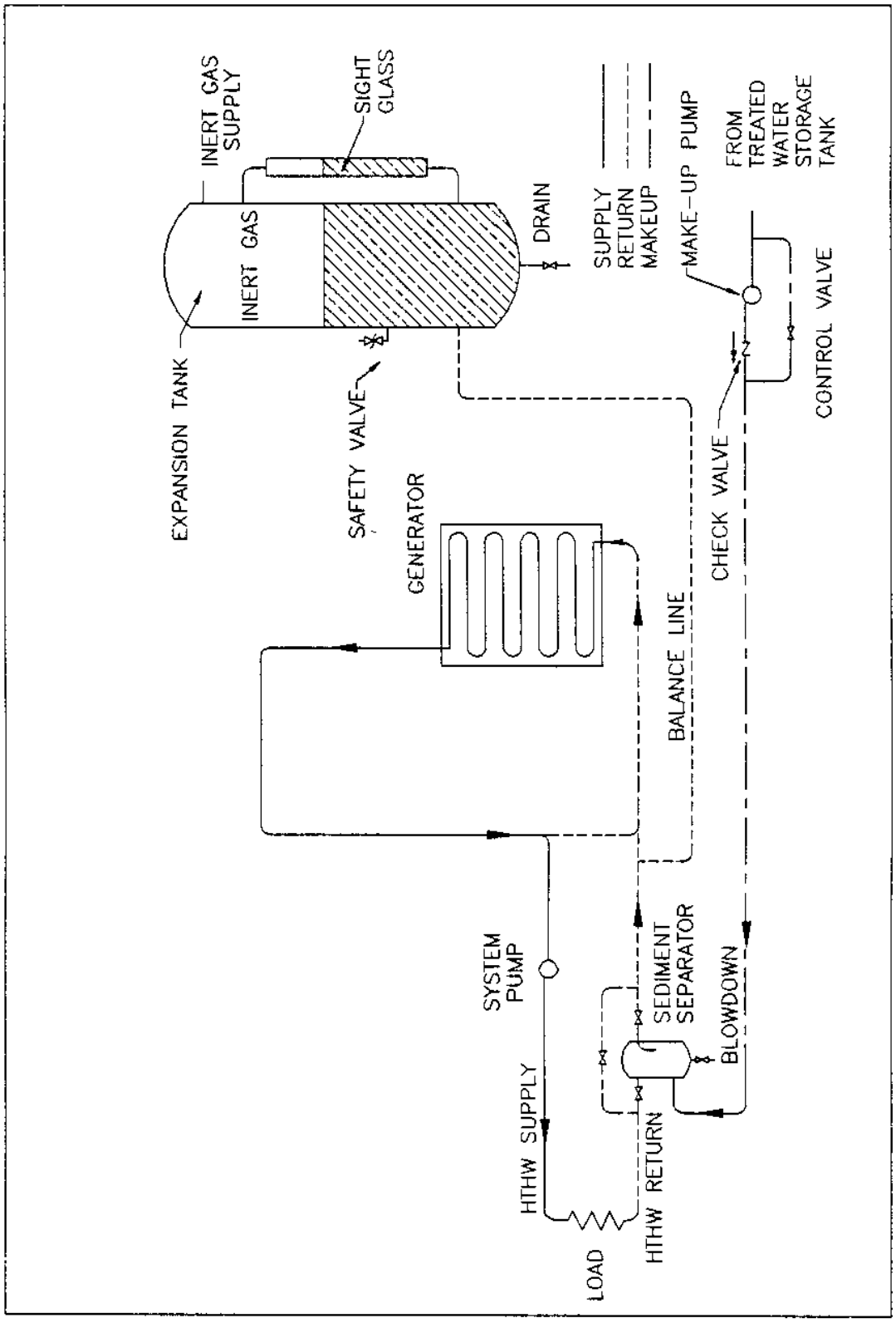

Figure 4
High Temperature Water System with Inert Gas Expansion (One Pump)

Figure 4
High Temperature Water System with Inert Gas Expansion (One Pump)

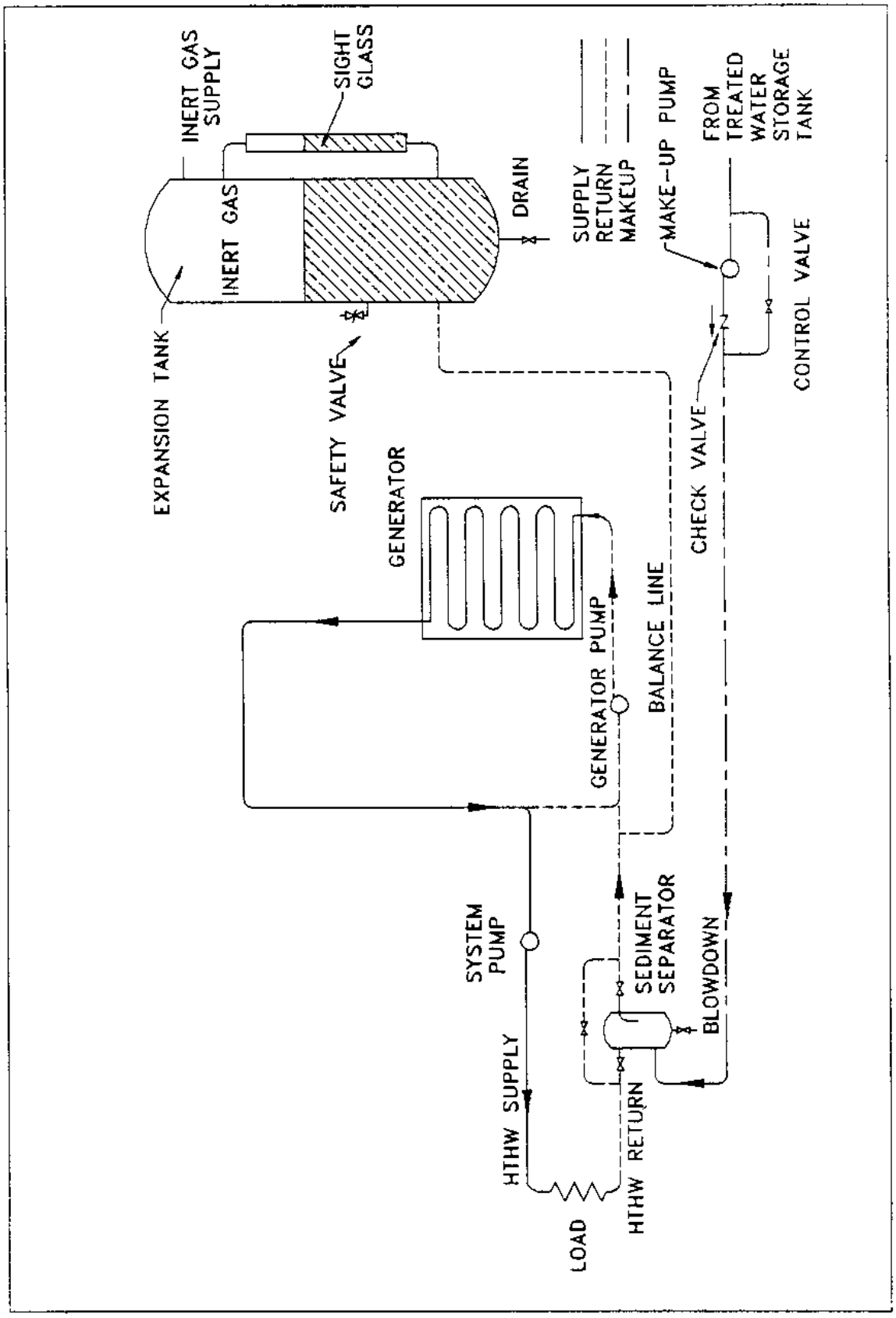

Figure 5
High Temperature Water System with Inert Gas Expansion Tank (Two Pumps)

Figure 5
High Temperature Water System with Inert Gas Expansion Tank (Two Pumps)

4.3.2 Not Recommended

a) Steam boiler, separate expansion vessel, direct-contact heat exchange of steam and water in expansion vessel.

b) Steam boiler, integral expansion vessel (boiler drum), water drawn from below water line of drum.

4.4 System Water Velocities

a) Central heating distribution systems should be zoned.

b) Irrespective of flow rates and velocities, each zone should be designed so that the total pressure drops in the zones do not vary more than 15 percent from each other.

c) A minimum velocity of 2 ft/sec (0.61 m/s) in the distribution system should be maintained to prevent stratification.

d) A reasonable average system water velocity is 5 ft/sec (1.52 m/s). Velocities should be based on the median temperature of the system, provided that operating temperatures are in excess of 350 degrees F (177 degrees C) and that the temperature drop through the heat exchange equipment is no less than 90 degrees F (50 degrees C) nor more than 130 degrees F (54.4 degrees C).

4.5 Types of Distribution Circuits. There are many types of distribution circuits in general use. The selection of the best system for the particular terrain and situation is essential for satisfactory operation of a HTW plant. Extreme care must be exercised not to design a distribution system that is difficult to operate, balance, and control.

4.5.1 Direct-Supply, Single-Circuit. HTW is fed from the central plant directly to the buildings to be served, passes through the heat exchange equipment, and returns to the generators through the return main. This is a simple system to design and is the most prevalent in use. It must be understood that the pressure at the entrance to each connected structure is different and the sizing of control valves to give balanced flow must be carefully analyzed. In a series circuit the decreasing supply-water temperature from structure to structure must be accounted for in heat exchanger design. See Figure 6.

4.5.2 Direct-Supply, Radial. This system utilizes a number of individual distribution circuits. In such a design the length of runs tends to be shorter, and differences in pressure at the entrances of buildings served are less. Control-valve sizing is not as difficult as with the direct-supply single-circuit. See Figure 7.

4.5.3 Direct-Supply, Reverse-Return. As depicted in Figure 8, the return lines are reversed. HTW from the central plant is fed to the connected structures. The return mains are reversed so that the farthest buildings, which have the longest supplies, have the shortest returns. In this manner, the system is more easily balanced and pressure differentials at all connected structures are nearly equal.

4.5.4 One-Pipe Loop-Main. A single distribution pipe is used to distribute HTW to the connected structures. Return water from the building is fed back into the loop main. The effect of lower temperatures at buildings farthest from the central plant must be considered. See Figure 9.

4.5.5 Primary and Secondary Distribution Systems. This is actually not a separate system but a type of distribution that can be utilized by any of the previously described systems. HTW carries the water economically over long sections of pipe. At the connected structure, the HTW is converted through heat transfer devices into low temperature water. The designer can then use standard heat transfer devices for the buildings. See Figure 10.

4.6 Hot Water Generators

a) Design the heating plant for not less than two generators totaling 135 to 150 percent of the heating load.

b) Where practicable, the ultimate heating plant shall not require operation of more than three simultaneously fired generators.

4.6.1 Types

a) HTW generators should be of the controlled forced circulation water tube type, specifically designed for HTW service.

b) Fire-tube boilers and natural-circulation water-tube boilers are not recommended.

4.6.2 Design. Generators should be designed and constructed to be suitable for the intended HTW service and should be certified as such by the manufacturer.

4.6.2.1 Maximum Pressure Drop through Generator. Hot water generators should be designed to have a maximum pressure drop through the generator of 15 psi (103.5 kPa). Keeping the pressure drop low, usually eliminates the need for a separate generator circulation pump, which reduces pump operating and investment costs.

4.6.2.2 Steam Space. A HTW generator should be designed to have no steam space. Inclusion of steam space of any kind within the generator can cause serious circulation problems in the internal tube circuits and possible tube failure.

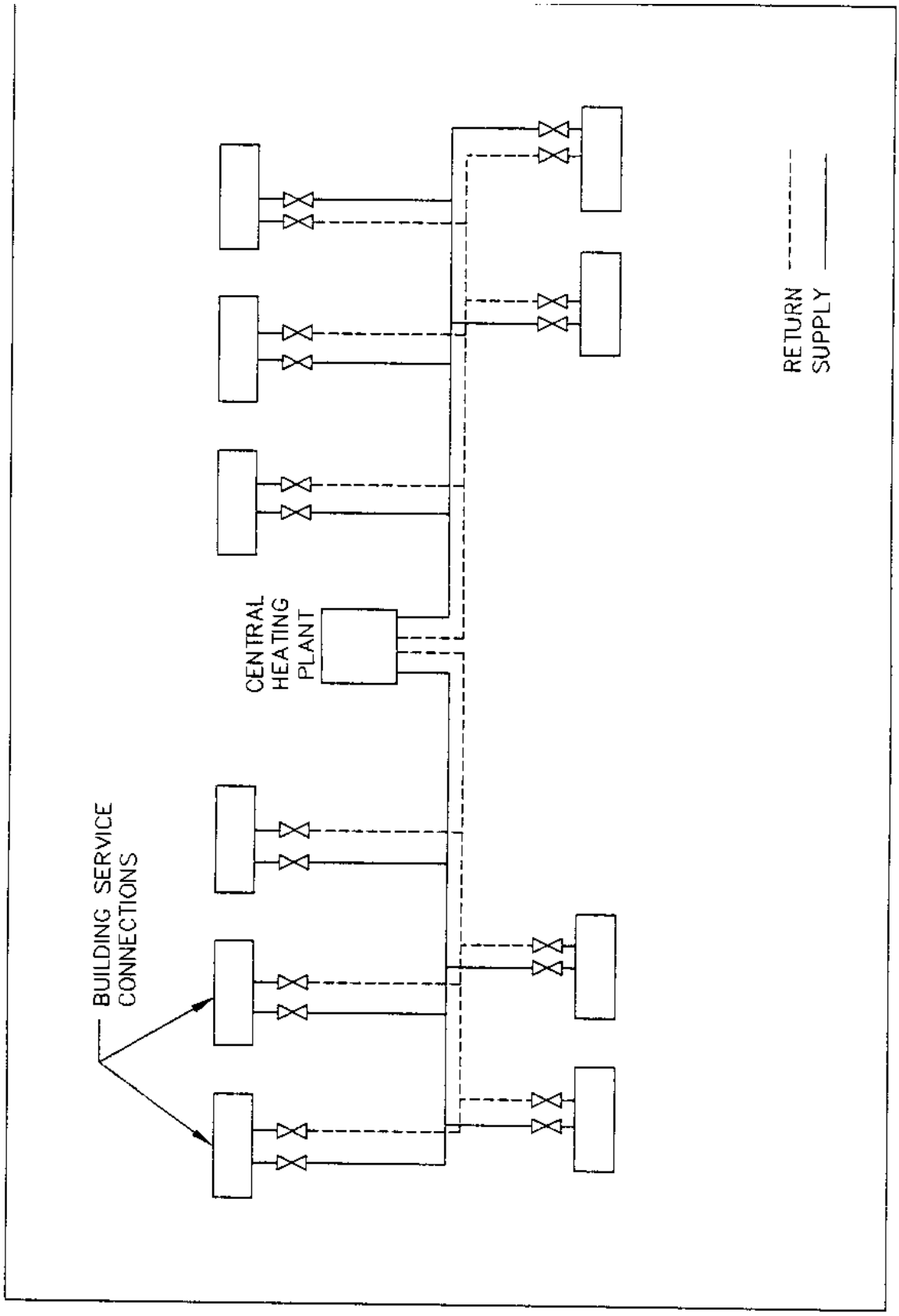

Figure 6
Direct Supply Single Circuit

Figure 6
Direct Supply Single Circuit

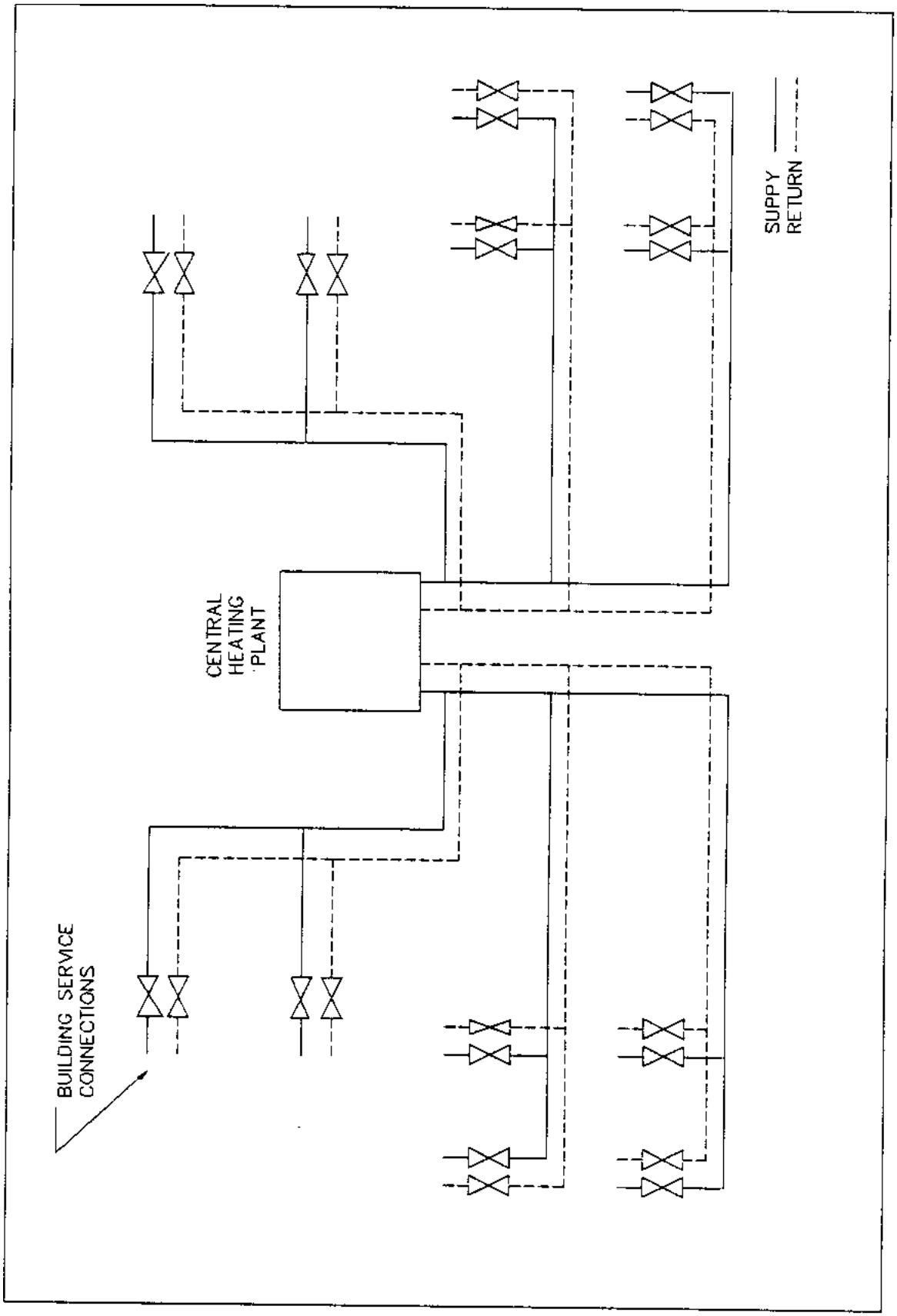

Figure 7
Direct Supply - Radial

Figure 7
Direct Supply - Radial

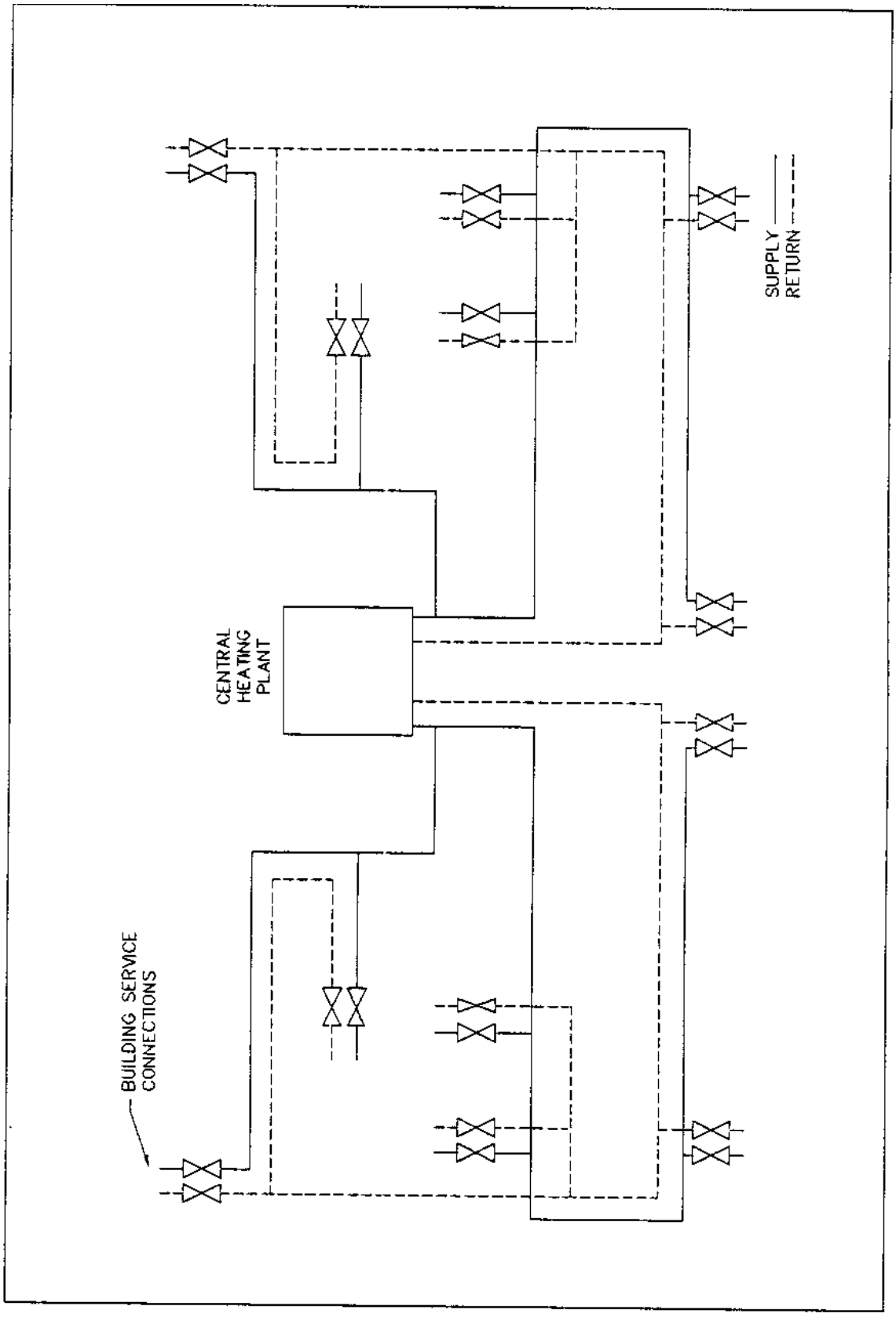

Figure 8
Reverse Return

Figure 8
Reverse Return

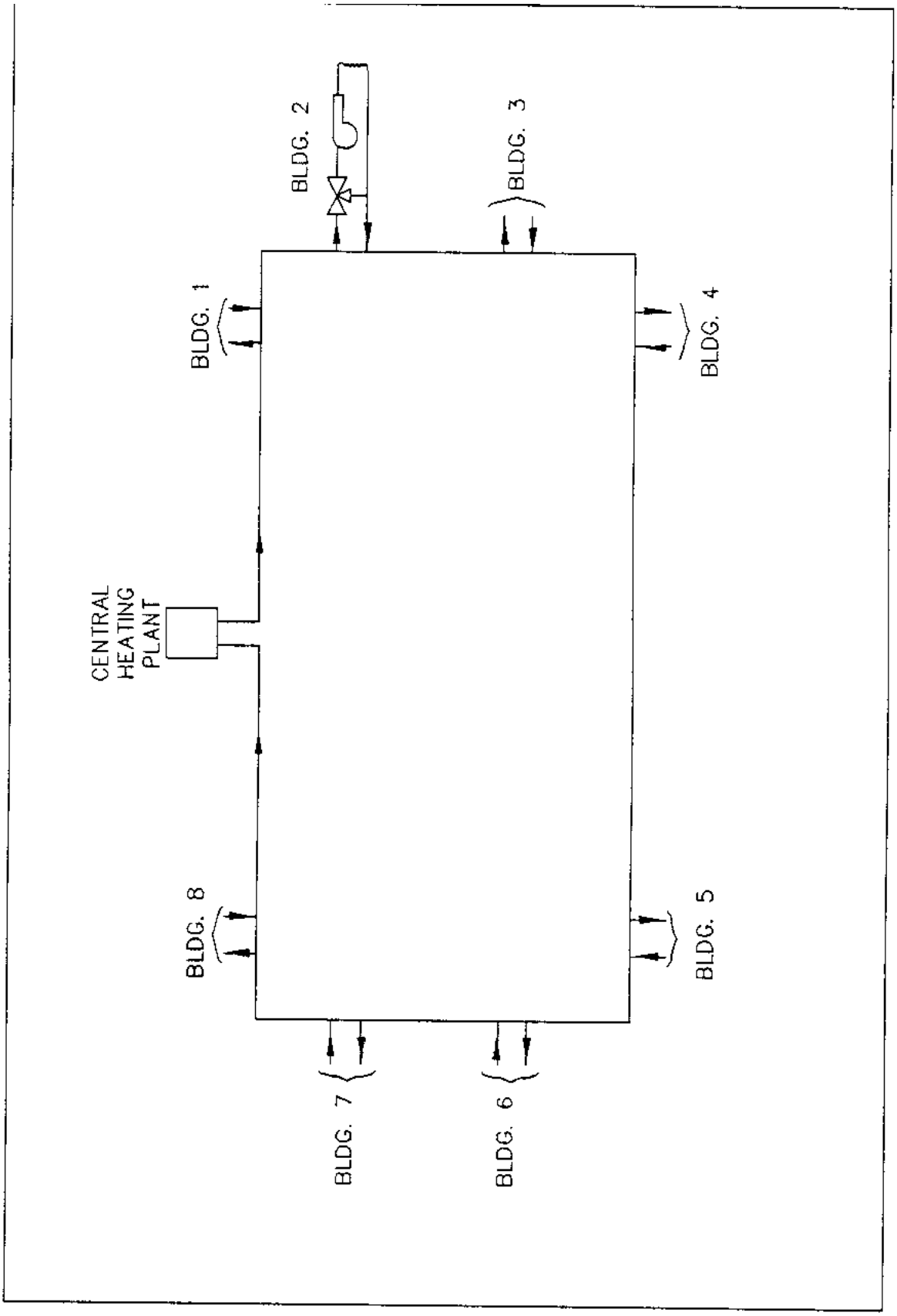

Figure 9
One-Pipe Loop-Main

Figure 9
One-Pipe Loop-Main

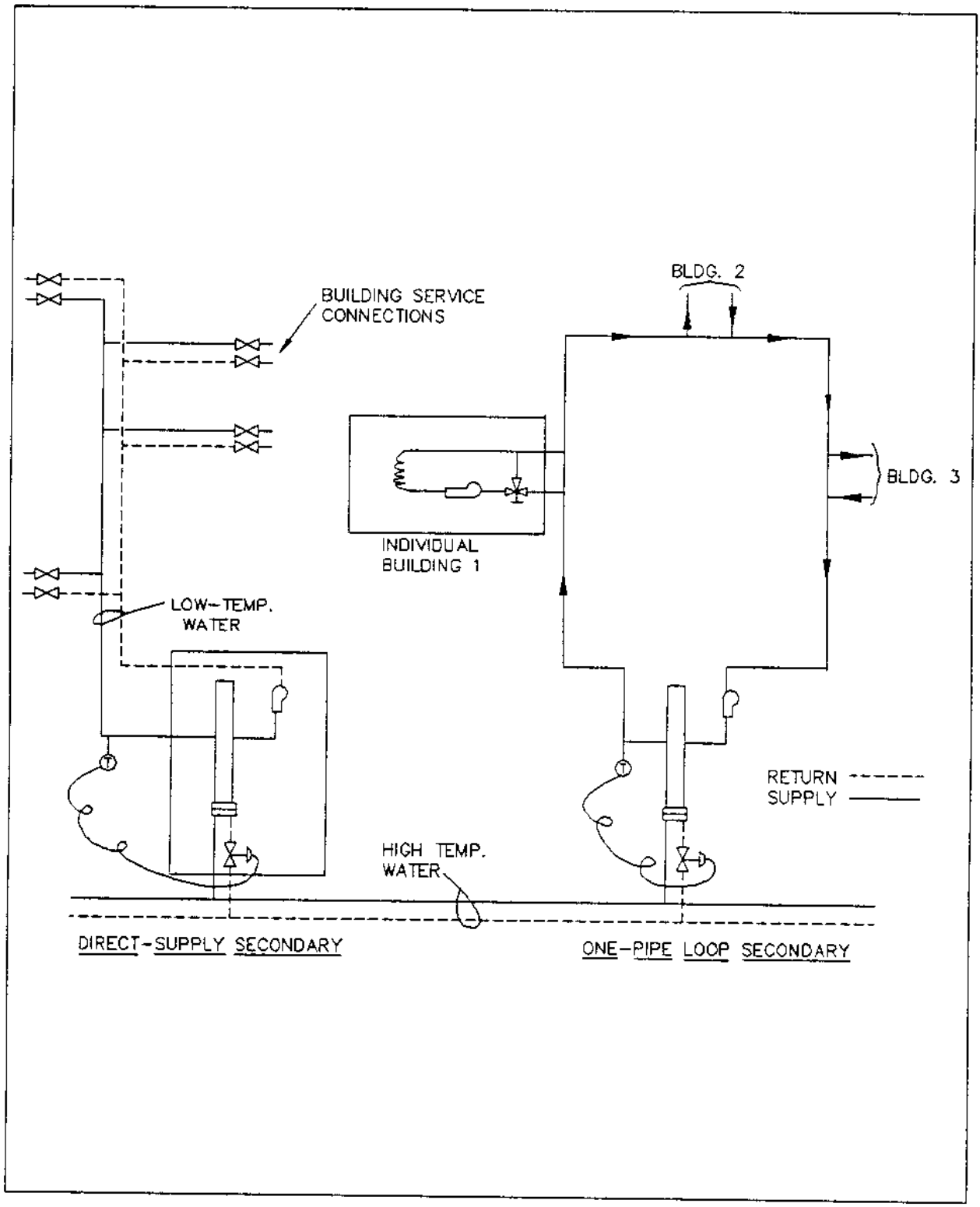

Figure 10
Primary and Secondary Systems

Figure 10
Primary and Secondary Systems

4.6.2.3 Tube Design. All tubes in the heat transfer zones should be designed for upflow only. One of the inherent dangers in a HTW generator is the possibility of developing steam bubbles. Since steam occupies much greater space than water, steam bubble generation can cause interrupted flow in a tube or tube circuit with resultant tube failure. When all tubes can produce only upflow, it is possible for the steam to escape from the generator and for water flow equalization to be reestablished. Trapped steam spaces must be avoided. Design of economizers, which are similar in construction to hot water generators, has shown that upflow is extremely important when the temperature of the water approaches that of saturation. Where a tube is designed for downflow of water, it should be removed from the heat transfer zones.

4.6.2.4 Equalization of Flow through Tube Circuits. Generator design must provide for equalization of flow through tube circuits. The water circuiting in the forced circulation generator is a major design consideration. The circuiting must effectively distribute the water in proportion to the heat input in any individual circuit. This is especially important in a steam pressurized system where the water approaches saturation temperature at the discharge of the generator. The flow of water must be proportioned to the heat input to prevent the formation of excessive amounts of steam.

4.6.2.5 Furnace Design. Furnace design and burner installation should be coordinated to ensure that there is no flame impingement on furnace tubes and walls. Flame clearance is the major criterion when designing oil and gas combustion chambers.

4.6.2.6 Blowdown. Continuous blowdown of generators is a carryover from past steam practices of eliminating sludge from mud drums. Blowdown is not required since there is little, if any, sludge in HTW systems after the initial fill.

4.7 Efficiency. See Section 9.

4.8 Pressurization. Pressurization is required in HTW systems in order to prevent the formation of steam in the flow lines. This can be accomplished by exerting a pressure on the water greater than the saturation pressure corresponding to the peak temperature of the system.

Collapse of pressurization must be avoided when system is in operation. Sudden or complete collapse of pressurization will lead to flashing of steam, water hammer, and similar phenomena that will set up stresses and strains that the system is not designed to absorb.

System should minimize fluctuations in system pressure and outgoing temperature of water from generator. If wide fluctuation in pressure is allowed, the entire system may be affected. Therefore, those systems that allow the system pressure or outgoing temperature to rise or fall significantly are not as satisfactory. It is also possible that pressure variation will affect the flow rate of water through the generator, especially with one pump systems. Reduced flow rate may result in vapor locking and subsequent tube failure.

4.8.1 Acceptable Pressurization Methods

4.8.1.1 Saturated Steam. The expansion tank is located on the suction side

of the system pump by means of an interconnecting balanced line. The steam cushion in the expansion tank is produced by flashing HTW supply and by the operation of the external steam boiler. The HTW heat energy source for flashing is provided by means of a small bleed line connected at the HTW supply leaving the generator. The HTW flows to the expansion tank to maintain the water in the tank at near generator discharge temperature. The bleed line also serves as a boiler feedwater source to the external steam boiler. The external steam boiler adds sufficient additional heat energy to the HTW bleed supply to produce steam at the desired pressure in the upper portion of the compression tank. Although the flashing water content in the lower part of the tank may alone produce a steam cushion at saturation pressure corresponding to HTW supply temperature, system characteristics require pressures higher than saturation. The external boiler provides a means for maintaining system pressures above saturation under all conditions of operation. A pressure of 25 psi (103.5 kPa) above HTW saturation pressure is considered to be a minimum differential.

One difficulty experienced in many steam cushioned systems is that of steam flashing in generator tubes during a cold start-up. The reason for this flashing is that until steam has been produced, the system operates in an unpressurized condition. In this state, furnace heat produces steam bubbles in generator tubes in spite of maintained water circulation. As the steam bubbles form, they collect and reduce the mass of water circulated in the tube which further accelerates flashing and reduced heat transfer. This flashing has resulted in tube failure by overheating.

The external boiler permits operating pressure to be established prior to firing the generators. This is accomplished by starting the external boiler and establishing the expansion tank pressure first. Once the system is at operating pressure there is little interchange of heat between the steam cushion and the water in the expansion tank. Therefore, the energy requirements of the external boiler are essentially limited to the tank surface heat losses and the generation of steam to replace the loss of water volume experienced during the net contraction of system water. The small magnitude of heat exchange between the tank water and steam cushion can be better realized when one considers that the temperature of the steam and water at their point of contact is the same. Heat transfer, therefore, depends mainly on conduction between the upper and lower parts of the steam cushion and upper and lower parts of the water volume. Without mechanical turbulation, the water temperature levels will tend to stratify with the warmest (lowest density) on top and the coolest (highest density) on the bottom. Stratification, therefore, tends to limit heat exchange in a manner advantageous to the desired process.

4.8.1.2 Inert Gas. This cycle places the expansion tank on the suction side of the system pumps by means of an interconnecting balance line. No system water flows through the tank due to action of the pumps. The point of connection of the balance line to the system return water piping is known as "the point of no pressure change". This phrase is defined as indicating that the total pressure value within the piping at that point remains the same whether the pumps are running or stopped. The "point of no pressure change" is important to assure a condition that will prevent cavitation at the pump impeller. Such a condition requires that a pressure be maintained well above the boiling point of water at any temperatures likely to exist.

The expansion tank is charged with nitrogen to provide the desired system static pressure level. The charge of gas is a fixed quantity and assuming no leakage or water absorption would remain without adding or

subtracting amounts of any load condition. The pressure within the expansion tank, however, will not remain constant since the water level is constantly changing with heating load change. As the heating load decreases and the return water becomes hotter, the water expands and flows into the expansion tank raising its level. This rise in level will compress the nitrogen to a higher pressure. In addition to these thermal expansion pressure changes, loss in system water volume will also reduce tank level and subsequently the pressure. Nitrogen is automatically added to maintain the minimum system pressure. Any operating experience that shows steam formation is taking place in the system requires a reevaluation of pressure settings. Because the system is designed to make pressure and temperature independent of each other, the pressure levels may be raised without affecting temperature control. Minimum pressure should be 25 psig (103.5 kPa) above saturation pressure corresponding to supply water temperature.

It is important to note that the HTW generator burners should not be fired until the minimum system pressure has been established. Since the HTW generator will steam even with cold water at low pressure, tube failure is likely. When steam bubbles begin to form in the generator tubing, they insulate the tubes and further speed up tube burnout. Scaling of tubes is also accelerated with steam formation. Nitrogen should be added automatically to the expansion tank through a pressure reducing valve from the nitrogen storage tank. Do not use compressed air for pressurization because air will be absorbed by the HTW system and consequently cause oxygen corrosion in metal components.

4.8.2 Unacceptable Pressurization Methods

4.8.2.1 Elevated Tank. This is theoretically the simplest method of pressurization. The tank or pressurizing vessel is placed on a hillside or suitable elevation, sufficient to provide proper hydraulic pressurization. Pressure change with volume is automatic as it varies with the rise and fall of temperature. However, the practicability of this system depends on suitable terrain, which is rare.

4.8.2.2 Hydraulic Pump Arrangement. As expansion occurs, an automatic valve releases water to a receiver. As the water contracts, a hydraulic pump is activated, pumping water from the receiver back into the system. This system is impracticable because small volume changes result in large pressure changes. Also, oxygen can be introduced into the system.

4.8.2.3 Weighted Plunger Arrangement. This system utilizes a separate vertical expansion tank, a weighted plunger, and necessary seals. The plunger rises and falls as the volume of water changes and is independent of temperature and volume changes, maintaining a constant pressure on the system. Seal problems, however, have been serious, and this system has not proved practicable for HTW.

4.8.2.4 Pressurization of the Boiler Drum. Pressure is maintained in the boiler drum at the desired pressure level with expansion of the water taken up in the rising water line of the drum and any excess amount being relieved to a lightly pressurized vessel. A boiler tube failure would cause immediate pressure loss, with subsequent flashing and water hammer.

4.8.2.5 Combination Inert Gas and Steam Pressurization System. In this system a separate expansion vessel, inert-gas tank, external heat source, feed pumps, and necessary controls are used. As water expands, the inert gas pressurized tank allows water to enter an externally heated spill tank under its own pressurization. Pressure in the expansion vessel is kept constant by releasing and refeeding water into the system. This system is complex, costly, and difficult to maintain, and is therefore unacceptable.

4.8.2.6 Air Pressurization System. The use of air as a pressurization agent is unacceptable since corrosive oxygen is placed into the system.

4.8.3 Advantages and Disadvantages of Steam and Inert Gas Systems. There is little advantage of one system over the other. The choice of pressurization is usually an economic choice rather than one of technical advantage.

4.8.3.1 Steam Pressurization Advantages

a) Lower operating pressures due to pressure-temperature relationships.

b) Constant system pressure in expansion vessel.

c) Controls usually fewer and less complex.

d) Large amount of thermal storage in expansion vessel which aids in peak load absorption.

4.8.3.2 Steam Pressurization Disadvantages

a) Full flow of heated water through tank, which requires additional insulation.

b) Inflexibility of expansion vessel location, which can require higher generator rooms.

4.8.3.3 Inert Gas Pressurization Advantages

a) Relatively cool expansion vessel expansion tank which is located so that convection currents are restricted and system water flow will not enter the tank.

b) Flexibility in locating expansion vessel.

c) System pressure that can be designed for any value within recommended limits.

4.8.3.4 Inert Gas Pressurization Disadvantages

a) Higher system pressures. In order to ensure that system pressure will not drop below saturation pressure, a safety factor must be included in design considerations. This may necessitate the use of higher pressure rated fittings and valves.

b) Inert gas costs.

4.9 Expansion Vessels. All systems should have dual expansion tanks to allow for inspection and maintenance while the system is on-line.

4.9.1 Purpose. Expansion vessels absorb the expansion and contraction of system water due to load variation and ensure, at all times, a controlled system pressure above that corresponding to the saturation temperature. They may also act as a momentary source of water supply in case of a system malfunction.

4.9.2 Sizing. Under no circumstances where heating is the basic load should the expansion volume be based on cold water conditions. The expansion volume should be based on normal design supply and return line differentials. In a steam-pressurized system the diameter of the expansion vessel should be 6 ft (1.83 m) or more with an aspect ratio of 3.5 to 1.

4.9.3 Expansion Vessel Volume for Steam Pressurized Systems. See Figure 11.

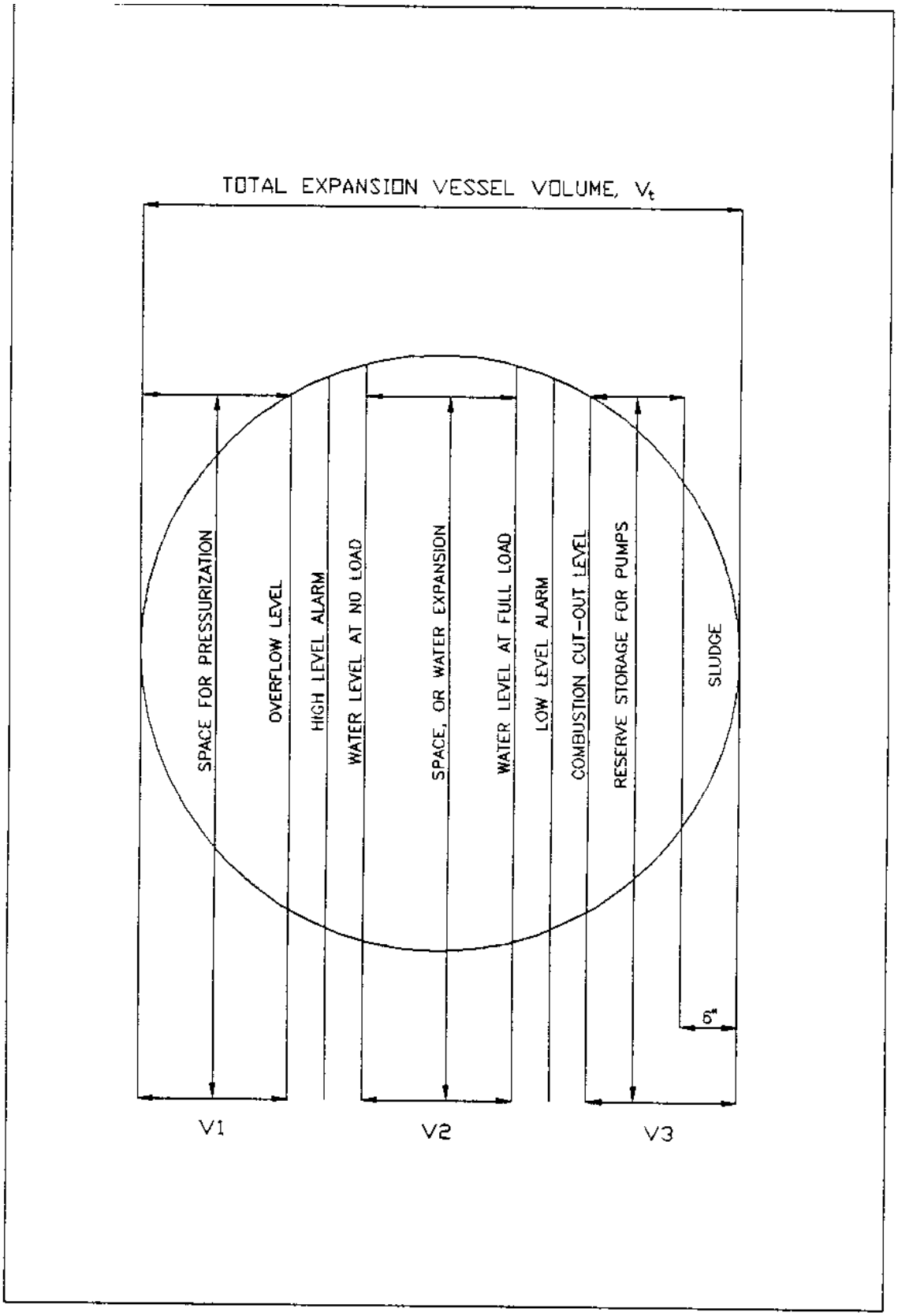

Figure 11
Pressurized Expansion Tank Relationships

EQUATION: $$V_T = V_1 + V_2 + V_3 \qquad (1)$$

where: V_T = Total expansion vessel volume

V_1 = Volume required for pressurization

V_2 = Volume required for expansion and contraction

V_3 = Volume required for sludge space, pump suction coverage, and reserve capacity

4.9.3.1 Volume Required for Pressurization

EQUATION: $$V_1 = 0.2(V_2 + V_3) \qquad (2)$$

where: V_1 = Volume required for pressurization

V_2 = Volume required for expansion and contraction

V_3 = Volume of sludge space based on 6 inch (15.24 cm) of depth plus the greater of the following two volumes: a) The volume of water sufficient to cover the top of the pump intake line in the expansion vessel by 6 inches or b) the volume needed to provide a 30 second supply of water based on combined pump capacity.

4.9.3.2 Volume Required for Expansion and Contraction. These two equations show the development of this volume calculation.

EQUATION: V_2 = Max Supply Water Expansion + Max Return Water Expansion (3)

EQUATION: $$V2 = \left[\frac{LW_{maxst} - LW_{minst}}{SD_{maxst} \quad SD_{minst}}\right] + \left[\frac{LW_{maxrt} - LW_{minrt}}{SD_{maxrt} \quad SD_{minrt}}\right] \qquad (4)$$

where: LW_{maxst} = Lb of water at maximum supply temperature

LW_{minst} = Lb of water at minimum supply temperature

SD_{maxst} = Specific Density at maximum supply temperature

SD_{minst} = Specific Density at minimum supply temperature

LW_{maxrt} = Lb of water at maximum return temperature

LW_{minrt} = Lb of water at minimum return temperature

SD_{maxrt} = Specific Density at maximum return temperature

SD_{minrt} = Specific Density at minimum return temperature

Supply water volume = the volume from the generator outlet, through the expansion vessel, pumps, supply distribution system and heat exchange equipment.

Return water volume = the volume from the heat exchanger outlet, through the return distribution system to the inlet side of the generator.

4.9.4 Expansion Vessel Volume for Gas Pressurized Systems. See Figure 11.

EQUATION:

$$V_T = V_1 + V_2 + V_3 \qquad (5)$$

where: V_T = Total expansion vessel volume

V_1 = Volume required for pressurization

V_2 = Volume required for expansion and contraction

V_3 = Volume required for sludge space, pump suction coverage, and reserve capacity

4.9.4.1 Volume Required for Pressurization

EQUATION:

$$V_1 = \left(\frac{(P_{min})(V_{max})}{P_{max}}\right) \qquad (6)$$

where:

V_1	=	Minimum gas volume required for pressurization
P_{min}	=	Minimum gas pressure (should be above saturation pressure-temperature relationships)
V_{max}	=	Maximum gas volume ($V_{max} = V_2 + V_3$)
P_{max}	=	Maximum gas pressure (should be below pressure ratings of piping, valves, and fittings)
V_2	=	Volume required for expansion and contraction
V_3	=	Volume of sludge space based on 6 inches of depth plus the greater of the following two volumes. The volume based on sufficient water to cover the top of the pump intake line in the expansion vessel by 6 inches or the volume needed for a 30-second supply of water based on combined pump capacity.

4.9.4.2 Volume Required for Expansion and Contraction. These two equations show the development of this volume calculation.

EQUATION: V_2 = Max Supply Water Expansion + Max Return Water Expansion (7)

EQUATION:

$$V_2 = cc \left[\left(\frac{LW_{maxst} - LW_{minst}}{SD_{maxst} \quad SD_{minst}} \right) + \left(\frac{LW_{maxrt} - LW_{minrt}}{SD_{maxrt} \quad SD_{minrt}} \right) \right] \quad (8)$$

where: LW_{maxst} = Lb of water at maximum supply temperature

LW_{minst} = Lb of water at minimum supply temperature

SD_{maxst} = Specific Density at maximum supply temperature

SD_{minst} = Specific Density at minimum supply temperature

LW_{maxrt} = Lb of water at maximum return temperature

LW_{minrt} = Lb of water at minimum return temperature

SD_{maxrt} = Specific Density at maximum return temperature

SD_{minrt} = Specific Density at minimum return temperature

Supply water volume = the volume from the generator outlet, through the supply distribution system and the heat exchange equipment.

Return water volume = the volume from the heat exchanger outlet, through the return distribution system, expansion vessel, pumps, to the inlet side of the generator.

4.9.4.3 Design Criteria for Steam Pressurized Systems

a) The vertical height of the expansion vessel above the pump shall be such that the available net positive suction head (NPSH) is not less then 125 percent of the required NPSH of the pump.

b) Provisions must be made for expansion and anchoring of the supply and return connections of the expansion vessel.

c) The generator supply piping to the steam-pressurized vessel should slope upward to allow venting of free gases. Cut-off valves should be located at the beginning and end of the supply line. Each generator should have separate supply piping to the expansion vessel.

d) Generator-supply piping entering a steam-pressurized vessel should be horizontal, with holes or slots to release water, thereby breaking up steam bubbles and avoiding shocks.

e) In the expansion vessel, the pump intake line should be located to prevent short circuiting of the cooler return water, and a minimum of 6 inches (152 mm) below the water line of the expansion vessel.

f) Provisions should be made to prevent vortexes from forming at the inlet of the pump intake line. This will aid in preventing cavitation in the pump.

g) The expansion vessel must be located at a level above the generator outlet. An expansion vessel located below the boiler outlet can flood, causing the steam space to form outside the expansion vessel.

4.9.5 Design Criteria for Gas Pressurized Systems

a) The pump suction line should extend a minimum of 6 inches (152 mm) above the expansion vessel bottom to prevent sludge from entering the pump.

b) The line between the expansion vessel and return main should be the same size as the return main.

c) The expansion vessel should be located on the inlet side of the generator and on the suction side of the pump.

4.10 Pumps. The three primary considerations in pump selection are suitability for HTW services, leak-tightness and NPSH.

4.10.1 Pump Types. Single stage centrifugal pumps are normally used to circulate HTW through the distribution system and through the generator. The pumps selected for this service must be designed especially for HTW in order to secure efficient, reliable operation with a minimum of maintenance. The head characteristic of the system circulating pumps should be flat in order to deliver nearly constant head throughout the range of operating capacities. Generator circulating pumps shall have steep head characteristics to accommodate the controlled circulation concept. At the same time it is necessary that the maximum head should occur at shutoff and should fall off gradually up to maximum capacity, suffering a decrease in pressure no more than 15 percent below the shutoff pressure at the maximum operating capacity. Circulating pumps are located in the return line of the system in order to maintain the highest possible positive suction head.

To further improve and guarantee efficient operation of these pumps, a mixing connection is provided so that a portion of the system water mixes with the water from the generator, lowering its temperature to avoid the danger of flashing at the pump suction. The suction intake of HTW pumps must be carefully designed to avoid sudden changes in velocity or direction which might contribute to flashing and inefficient operation. Adequate water cooling must be provided for all pumps. Mechanical seals are recommended.

4.10.2 Pump Acceptance Tests

a) All pumps used for HTW should be tested at the factory in a range of temperatures and corresponding saturation pressures from 250 degrees F (121 degrees C) up to the design operating temperature of the system. The pump should be pressure tested at one and one-half times the maximum design operating pressure of the system. The manufacturer must certify that these tests were performed and submit them to the Contracting Officer.

b) The pumps should be rated in terms of pounds per minute versus head requirements at the above mentioned pressures and temperatures.

4.10.3 Constant versus Variable Speed Pumps

a) Variable speed pumps should be used for HTW systems when economically justifiable.

b) Preferred procedure is to use three pumps, each sized for 50 percent of the load, with one pump for stand-by.

c) Where summer loads are small, an additional pump sized at 25 percent or less may be used.

4.10.4 Net Positive Suction Head

a) The required NPSH of the pump shall not exceed 80 percent of the available NPSH. The required NPSH is the head that the pump manufacturer must know for correct operation of the pump. The available NPSH is the head needed to provide this required head, in the form of either static or pressure head.

b) If two or more pumps of differing head requirements are used, NPSH should be based on the pump having the greater head requirements.

4.10.5 One-Pump versus Two-Pump Systems

a) A one-pump system may have many pumps in the system, but they all serve the combined purpose of delivering water to the generators as well as the system.

b) A two-pump system may have many pumps in the system, but one set of pumps delivers water to the generators, and another set of pumps delivers water to the system.

c) Hot water generators are designed for a specific flow of water through the generator. A minimum quantity is needed to protect against tube failure and steam generation. In a one-pump installation, this flow is usually controlled by an automatic bypass valve which provides a uniform flow to the boiler regardless of distribution system load variations. In a very large HTW system it may become necessary to use a two-pump system for control of water through the generator. The quantity of water circulated through each generator is kept more or less constant no matter at what rate the generator

is fired. There need be no relationship during operation between the quantities of water circulated by the system pumps and the generator circulation pumps in this arrangement except that system flow must always be less than generator flow. With this double pump arrangement no instruments or other equipment are needed to control the flow through the generator because the circulation pumps have a constant capacity and are entirely independent of the system circulation.

d) Where two or more generators are installed, the generator having the greatest pressure drop should be used in pump head calculations.

4.10.6 Single- versus Multiple-Stage Pumps. Single-stage pumps should be used for HTW systems. Where the head requirements exceed the capabilities of a single-stage pump, the preferred procedure is to use single-stage booster pumps within the distribution system.

4.10.7 Location

a) On steam-pressurized systems, pumps should be located in a central position with respect to the generator(s) and expansion vessel. The lines connecting the expansion vessel and pump should contain no unnecessary turns or restrictions, and the pump location should provide the maximum NPSH possible. The pump should be accessible for maintenance, and provisions should be made to prevent misalignment due to external piping at elevated temperatures. Usually the pump sucks from the hottest water in the system. On some systems, a blending mechanism is utilized to reduce the temperature to the pump to prevent flashing or cavitation.

b) On gas-pressurized systems, the expansion vessel should be located on the inlet side of the generator and on the suction side of the pump. The pump shall be accessible for maintenance and provisions made to prevent misalignment at elevated temperatures.

4.10.8 Miscellaneous

a) Where separate generator pumps are used, the pump characteristics should be in accordance with the recommendations of the generator manufacturer.

b) In order to reduce the costs of meeting increased future head requirements of the system, all pumps and casings should be designed to take the next larger impeller size.

c) The pump motor and accessories should be selected on the basis of the larger impeller size.

4.11 Controls. MIL-HDBK-1003/12, Boiler Controls, provides design criteria for plant controls. Paragraph 8.10 provides guidelines for selecting the type of control.

4.11.1 Combustion Controls for Forced Circulation Generators with Steam Pressurized Systems

a) Provide for continuous modulating control of firing, since interruption of firing may cause a loss of pressurization in hot temperature water systems.

b) For generator outputs up to 10,500,000 Btu per hour (3077 kW), use the water outlet temperature from each boiler to control the firing rate of the generator.

c) For generator outputs under 30,000,000 Btu per hour (8790 kW), provide a water outlet temperature regulator on each generator to control the firing rate on that generator and a master pressure controller on the expansion drum to override the individual temperature regulators when necessary to average out the total load among the generators carrying the load.

d) For generator outputs over 30,000,000 Btu per hour (8790 kW), regulate the firing rate of each generator by the temperature difference between outlet and inlet water temperatures. This difference must be measured directly in order to avoid compounding instrument errors. Provide a master pressure controller on the expansion drum to override the individual temperature regulators when necessary.

e) As in steam boilers, draft controls shall be suited to the furnace draft arrangement, whether pressurized or balanced.

4.11.2 Combustion Controls for Forced Circulation Generators with Inert Gas-Pressurized Systems. Use the same controls as on a steam-pressurized system, except omit the master pressure regulator on the expansion tank.

4.11.3 Water Flow Control for Steam-Pressurized HTW Systems with Forced Circulation Generators

4.11.3.1 Plants with Combination System and Boiler Circulating Pumps

a) Measure water flow at each generator inlet so that all generator flows can be equalized.

b) Place an automatic control valve (incorporating a manual three-valve bypass) in bypass piping between the pump discharge header and return line from the distribution system. Use generator flow measurements to regulate the automatic bypass control valve to assure constant design water flow through each generator, regardless of load conditions.

c) Incorporate a pressure differential switch across the pump headers or provide a minimum flow switch in each flow meter to cut out combustion when there is insufficient flow through a generator.

d) Interlock the pump starters with combustion control to prevent generator operation without pump operation.

e) Variable speed control of pumps may be used if savings justify additional costs of wound rotor motors and speed control equipment or variable speed clutches.

f) Control flow of blending water from return line to pump suction to maintain a constant supply water temperature to the distribution system and to prevent cavitation of pumps due to flashing. This should be done manually for plants with generators under 30,000,000 Btu per hour (8790 kW) and automatically for plants with larger generators.

4.11.3.2 Plants with Separate Generator Circulating Pumps in Use with System Circulating Pumps

a) Measure water flow at each generator and provide manual control of this flow so that all generator flows can be equalized.

b) Incorporate a minimum flow switch in each generator flow meter to interrupt combustion when the flow drops below a safe value.

c) Interlock the generator circulating pump starters with combustion controls of all generators to prevent any generator operating without a pump operating.

d) Generator circulating pumps should always operate at constant speed. The system pumps may operate at variable speed only if the additional costs of variable-speed equipment can be economically justified.

e) Control the flows of blending water from the return line to system pump suctions by a manual valve for plants with generators under 30,000,000 Btu per hour (8790 kW) and by an automatic valve for plants with larger generators. Install a manual throttling valve in the return line to the suction side of the generators circulating pumps to create a pressure drop so that the control valve for the blending water will be effective and to stop steaming conditions.

4.11.3.3 Makeup Water Flow Control

a) For small flow loss, use manual start and stop for normal makeup pumps when expected loads are steady. If loads fluctuate widely, provide for automatic start and stop of these pumps by float controls in the expansion tank.

b) For large flow loss, use manual start and stop for emergency makeup pumps. If there is no emergency pump, provide an electrical interlock in the system circulating pump starters which would trip out these pumps when the low level alarm on an expansion tank is activated.

4.11.3.4 Automatic Isolation Valves. Equip all systems with motor-operated valves to isolate the distribution system and assure flow through the generators in case of a distribution line break. The supply isolation valve should close in approximately 15 seconds with the pressure sensing element located on the downstream side of the valve.

The return line isolation valve should close as soon as possible without allowing excessive pressures to develop due to the change in velocity head into pressure head. The pressure sensing element should be on the upstream side of the return isolation valve. The controls shall provide for an interruption of combustion and stoppage of the secondary (distribution) system pump operation but allow continuation of primary (generating circulating) pump operation.

4.11.4 Water Flow Control for Steam Pressurized HTW Systems with Natural Circulation Generators

a) In plants with combustion system circulation and generator circulating pumps, part of the water discharged from combination pumps is fed to steam boilers through single element feedwater regulators. As with forced recirculation boilers, no other automatic bypass valves are required.

b) Plants with separate system circulation and generator circulating pumps use the same type of system circulation pumps as for the forced-circulation boiler systems (see above). They also use the same type of feed pumps as for steam heating plants.

c) Provide continuous operation makeup pumps which feed either the boilers or expansion tanks in response to level controls. In case of large water flow loss in a system, provide for manual start and stop of emergency makeup pumps.

4.11.5 Water Flow Control for Inert Gas Pressurized Systems. Use the same controls as for steam pressurized systems with forced circulation generators (see above), except, also use automatic level controls for expansion tank.

4.11.6 Overflow Control on Steam Pressurized Expansion Tanks. Use pneumatic float valves for control of overflow levels.

4.12 Piping

a) Pipe connections shall be welded. Screwed joint connections except for pressure or temperature sensing devices shall not be used. Connections to valves and equipment shall be flanged or welded. Use metallic or spiral wound gaskets.

b) Pressure piping shall conform to the requirements of ANSI B31.1, Power Piping.

c) Copper and bronze materials should be avoided for HTW piping.

d) Expansion should be controlled by the use of expansion loops.

4.13 Valves

a) All valves should be constructed of cast-steel bodies, stainless steel trim, and packing such as Teflon.

b) Bronze-trimmed valves should not be used in HTW systems.

c) All valves should be capable of being repacked under operating pressures.

d) Gate valves should be used only as generator isolation valves.

e) Any valves other than control valves should have as low a pressure drop as possible in order to reduce frictional losses and pumping costs.

4.14 Space and Process Heating Equipment

4.14.1 Direct Heating with High Temperature Water. This type of heating may be achieved by:

a) Unit heaters (usually high velocity type) used in buildings where the required height for mounting still gives suitable temperatures at the floor level.

b) Radiant panel heating sometimes used in large spaces where the mounting height is greater than 10 ft from the floor level. The panels need to be spread apart so that the radiation is uniformly directed over the spaces to be heated. With high temperature radiant panel heating, comfort conditions can be obtained with lower space temperatures than those required for convection heating. This feature is especially desirable for heating areas with high ceilings such as a warehouse or hangar.

c) Forced hot air heating systems distribute air throughout the spaces to be heated. These systems can be equipped with extended surface air heaters which use HTW as the heating medium.

d) Hospitals, laundries, kitchens and similar facilities utilize steam. HTW can be used as the heating source provided that steam pressure beyond the saturation pressure of the HTW plant is not required. This eliminates separate steam-producing units, traps, and pressure-reducing valves in the primary circuit. A sudden demand for steam can be handled with the

large heat storage available in the HTW system, but these heat exchangers will accumulate solids and must be periodically cleaned.

4.14.2 Indirect High Temperature. Heat exchangers should be designed to effect maximum temperature drops consistent with the pressure or temperature of the medium produced. A reduction in primary operating temperatures may effectively nullify the operation of these heat exchangers unless they are specifically designed for varying inlet-temperature conditions. There are two basic types of indirect heat exchangers:

a) Flash or instantaneous types. These are vessels which store a small amount of water with respect to the heating capabilities of the coil. Since no water is stored, the fly wheel effect of heavy demands is not available, and any demand in excess of the capabilities of the coil results in rapid temperature drops.

b) Storage or inertial types. These are classified as vessels which store a large amount of water with respect to the heating ability of the coil. The large amount of stored water is able to meet unusually heavy demands without much difficulty. If load requirements are periodic, standby losses may be excessive.

4.15 Makeup Water and Water Treatment

a) Makeup water is required due to small leaks, leakage around packed joints of valves, relief valves, pump shafts, etc.

b) Two makeup pumps are required, each sized for 0.5 percent of the total distribution system flow. In case of a coal-fired generator, an additional emergency pump rated at 5.0 percent of the distribution system flow is required.

c) A treated water storage tank should be provided for emergency pumping requirements. This tank is usually sized for approximately 20 minutes makeup pump demand except, in coal-fired plants, the tank shall be sized for 40 minutes of emergency flow capacity.

d) A qualified water consultant should be retained on every HTW installation to advise on water treatment for the primary and secondary water circuits.

e) The initial filling of the HTW system or large water loss replacements should be through a water treatment source other than the plant system.

f) Generally deaeration is not required. Oxygen is usually removed during the initial startup of the system.

g) A demineralization unit is usually not required for a HTW system.

h) A water softener sized to take care of make-up requirements for operating conditions is recommended.

i) The permanent water softener may need to be supplemented for initial fill requirements when water conditions are particularly poor.

j) Zero hardness (5 parts per million or less) and a PH of 9.3 to 9.9 with no free oxygen should be maintained in the system at all times.

Section 5: FUELS AND COMBUSTION

5.1 Characteristics and Applications of Fuel Types

5.1.1 Coal. Coals are generally ranked in one of four broad categories: anthracite, bituminous, sub-bituminous, and lignite. The ASTM bases these rankings on several properties which include heating value (Btu), agglomerating (caking) characteristics, fixed carbon, and volatile matter. The rankings are further divided on the basis of ash, moisture, and sulfur content. It is essential to understand the effect of these properties when selecting a coal for various types of fuel burning equipment and/or methods of firing. For typical values, refer to Table 7.

5.1.1.1 Heating Value (Btu/lb). The heating value of a coal is determined by burning a weighed sample of the fuel in a controlled environment. Expressed in Btu/lb of fuel, this property can be determined by either ASTM method D 2015, Test Method for Gross Calorimeter, or D 3286, Test Method for Gross Calorific Value of Solid Fuel by the Isothermal-Jacket Bomb Calorimeter. As a measurement of the energy entering the boiler in the fuel, this property is one of the main characteristics used to calculate boiler efficiency.

5.1.1.2 Agglomerating (Caking) Characteristics. The free swelling index (F.S.I.) gives a measure of the extent of swelling of a coal and its tendency to agglomerate when heated rapidly. This test is covered by ASTM method D 720, Test Method for Free-Swelling Index of Coal, which rates the coal on a scale of 1 to 9. Coals with a high free swelling index are referred to as coking (caking) coals, whereas those with a low index are referred to as non-coking (free-burning) coals.

a) Caking Type. When heated in a furnace, caking coals pass through a plastic state during which the individual coal pieces will fuse together into large masses of semi-coke. The semi-coke is impervious to uniform flow of supply air. This characteristic, when applied to stokers employing thick fuel beds in the burning area can cause problems with maintaining uniform combustion and air flow through the coal mass.

b) Free Burning Coals. Free-burning coals with free swelling index range of 1 to 3-1/2 do not fuse individual coal pieces together. The pieces will burn separately. Any pieces which stick in a group when heated will quickly break into fragments by vibration or movement of the fuel bed.

5.1.1.3 Items of Proximate Analysis of Coal. The next four properties effecting the selection of coal have been combined by the ASTM into a test called the proximate analysis. A proximate analysis ASTM method D 3172, Proximate Analysis of Coal and Coke, is a determination of the percentage by weights of moisture, volatile matter, and ash with the difference being defined as fixed carbon.

Table 7
Analyses of Typical U.S. Coals, as Mined

State	Rank	H_2O	C	H_2	S	O_2	N_2
			% Ultimate Analysis				
RI	A	13.3	64.2	0.4	0.3	2.7	0.2
CO	B	2.5	83.9	2.9	0.7	0.7	1.3
NM	B	2.9	82.3	2.6	0.8	1.3	1.2
PA							
(2)	B	5.4	76.1	1.8	0.6	1.8	0.6
(3)	B	2.3	86.7	1.9	0.5	0.9	0.8
(4)	B	4.9	81.6	1.8	0.5	1.3	0.7
AR	C	2.1	80.3	3.4	1.7	1.7	1.5
PA	C	3.0	80.2	3.3	0.7	2.0	1.1
VA	C	3.1	70.5	3.2	0.6	2.2	0.8
AR	D	3.4	79.6	3.9	1.0	1.8	1.7
MD	D	3.2	79.0	4.1	1.0	2.9	1.6
OK	D	2.6	80.1	4.0	1.0	1.9	1.7
WV	D	2.7	84.7	4.3	0.6	2.2	1.5
PA	E	3.3	80.7	4.5	1.8	2.4	1.1
VA	E	3.1	80.1	4.7	1.0	2.4	1.5
AL	F	5.5	80.3	4.9	0.6	4.2	1.7
CO	F	1.4	73.4	5.1	0.6	6.5	1.3
KS	F	7.4	70.7	4.6	2.6	5.0	1.3
KY	F	3.1	79.2	5.4	0.6	7.2	1.5
MO	F	5.4	71.6	4.8	3.6	4.2	1.4
NM	F	2.0	70.6	4.8	1.3	6.2	1.2
OH	F	4.9	71.9	4.9	2.6	7.0	1.4
OK	F	2.1	76.7	4.9	0.5	7.9	2.0
PA	F	2.6	76.6	4.9	1.3	3.9	1.6
TN	F	1.8	77.7	5.2	1.2	6.0	1.9
TX	F	4.0	65.5	5.9	2.0	9.1	1.3
UT	F	4.3	72.2	5.1	1.1	9.0	1.6
VA	F	2.2	80.6	5.5	0.7	5.9	1.3
WA	F	4.3	68.9	5.4	0.5	8.5	1.5
WV	F	2.4	80.8	5.1	0.7	4.8	1.6
IL	G	8.0	68.7	4.5	1.2	7.6	1.6
KY	G	7.5	66.9	4.8	3.5	6.4	1.4

Table 7 (continued)
Analyses of Typical U.S. Coals, as Mined

State	Rank	H_2O	C	H_2	S	O_2	N_2
		% Ultimate Analysis					
MO	G	10.5	63.4	4.2	2.5	5.2	1.3
OH	G	8.2	68.4	4.7	1.2	9.1	1.4
WY	G	5.1	73.0	5.0	0.5	10.6	1.2
IL	H	12.1	62.8	4.6	4.3	6.6	1.0
IN	H	12.4	63.4	4.3	2.3	7.6	1.3
LA	H	14.1	58.5	4.0	4.3	7.2	0.9
MI	H	12.4	65.8	4.5	2.9	7.4	1.4
CO	I	19.6	58.8	3.8	0.3	12.2	1.3
WY	I	23.2	54.6	3.8	0.4	13.2	1.0

Table 7 (continued)
Analyses of Typical U.S. Coals, as Mined

State	Rank	H_2O	VM	FC	ASH	HHV, Btu/Lb	(1) Theoretical Air Lb/10^6 Btu
		% Proximate Analysis					
RI	A	13.3	2.5	65.3	18.9	9,313	808
CO	B	2.5	5.7	83.8	8.0	13,720	787
NM	B	2.9	5.5	82.7	8.9	13,340	786
PA							
(2)	B	5.4	3.8	77.1	13.7	11,950	791
(3)	B	2.3	3.1	87.7	6.9	13,540	794
(4)	B	4.9	3.7	82.2	9.2	12,820	788
AR	C	2.1	9.8	78.8	9.3	13,700	770
PA	C	3.0	8.4	78.9	9.7	13,450	777
VA	C	3.1	10.6	66.7	19.7	11,850	782
AR	D	3.4	16.2	71.8	8.6	13,700	774
MD	D	3.2	18.2	70.4	8.2	13,870	761
OK	D	2.6	16.5	72.2	8.7	13,800	775
WV	D	2.7	17.2	76.1	4.0	14,730	767
PA	E	3.3	20.5	70.0	6.2	14,310	765

Table 7 (continued)
Analyses of Typical U.S. Coals, as Mined

State	Rank	% Proximate Analysis H_2O	VM	FC	ASH	HHV Btu/Lb	(1) Theoretical Air Lb/10^6 Btu
VA	E	3.1	21.8	67.9	7.2	14,030	778
AL	F	5.5	30.8	60.9	2.8	14,210	768
CO	F	1.4	32.6	54.3	11.7	13,210	763
KS	F	7.4	31.8	52.4	8.4	12,670	769
KY	F	3.1	35.0	58.9	3.0	14,290	758
MO	F	5.4	32.1	53.5	9.0	12,990	769
NM	F	2.0	33.5	50.6	13.9	12,650	766
OH	F	4.9	36.6	51.2	7.3	12,990	762
OK	F	2.1	35.0	57.0	5.9	13,630	757
PA	F	2.6	30.0	58.3	9.1	13,610	773
TN	F	1.8	35.9	56.1	6.2	13,890	767
TX	F	4.0	48.9	34.9	12.2	12,230	767
UT	F	4.3	37.2	51.8	6.7	12,990	758
VA	F	2.2	36.0	58.0	3.8	14,510	764
WA	F	4.3	37.7	47.1	10.9	12,610	758
WV	F	2.4	33.0	60.0	4.6	14,350	768
IL	G	8.0	33.0	50.6	8.4	12,130	766
KY	G	7.5	37.7	45.3	9.5	12,080	774
MO	G	10.5	32.0	44.6	12.9	11,300	773
OH	G	8.2	36.1	48.7	7.0	12,160	762
WY	G	5.1	40.5	49.8	4.6	12,960	757
IL	H	12.1	40.2	39.1	8.6	11,480	769
IN	H	12.4	36.6	42.3	8.7	11,420	758
LA	H	14.1	35.6	39.3	11.0	10,720	754
MI	H	12.4	35.0	47.0	5.6	11,860	762
CO	I	19.6	30.5	45.9	4.0	10,130	756
WY	I	23.2	33.3	39.7	3.8	9,420	757

(1) Theoretical air required for combustion under stoichiometric conditions (no excess air).
(2) Orchard Bed, (3) Mammoth Bed, (4) Holmes Bed.

RANK KEY: A - Meta - anthracite, B - Anthracite, C - Semianthracite,
D - Low-Vol. Bituminous, E - Med.-Vol. Bituminous,
F - High-Vol. Bituminous A, G - High-Vol. Bituminous B,
H - High-Vol. Bituminous C, I - Subbituminous.

Source: Combustion Fossil Power System, 1981 Edition, Published by Combustion Engineering, Inc.

a) Fixed Carbon. Fixed carbon represents the portion of coal that must be burned in solid state after volatile matter is driven off. It is not the total carbon in the coal since the volatile matter contains hydrocarbons. The fixed carbon portion usually burns in the fuel bed on a stoker or as solid particles in a pulverized coal furnace.

b) Volatile Matter. Volatile matter is the portion of the coal which is driven off as a vapor when it is heated according to ASTM method D 3175, Test Method for Volatile Matter in the Analysis Sample of Coal and Coke. The main constituents of volatile matter in all ranks of coal are water vapor, carbon monoxide, hydrogen, methane, and other hydrocarbons. The volatile matter varies greatly for different ranks of coal and has a profound effect on ignition rate when burning in a furnace. High volatile coals in a range of 35 percent and higher result in quick ignition. This quick release of burning hydrocarbons affects furnace design, location of overfire air, ignition arches, and furnace heat release.

c) Ash. Ash is the noncombustible residue after complete combustion of coal. The content (percentage) and characteristics of ash in coal have substantial effects on furnace design.

1. Ash Content. The percentage by weight of ash in coal is determined by ASTM method D 3174, Test Method for Ash in the Analysis Sample of Coal and Coke from Coal. It is usually more meaningful to define ash content as it relates to energy input rather than on the basis of a weight percentage of the coal alone. The pounds of ash per Btu fired can be calculated by dividing ash content (lb of ash per lb of fuel) by the heating value of the coal (Btu/lb of fuel). Relating fuel ash content to the heat input gives a realistic estimate of the amount of ash that must be handled as bottom ash and by the pollution control equipment as fly ash. It also gives an insight to the potential amount of ash that must be handled on heat transfer surface. Note that the actual amount of refuse will be much greater than the calculated amount of ash due to the presence of unburned carbon particles.

2. Ash Characteristics. When ash is heated, it becomes soft and sticky and may form deposits (clinkers) on boiler tubes. The temperature at which the ash has a tendency to stick, is called the ash softening temperature. The build-up of ash acts as an insulation which reduces the efficiency of heat transfer. The initial deposits are usually easy to remove by regular soot-blowing. If the deposits are permitted to build up in a zone of high gas temperature, its surface (due to the insulating properties of the ash) can reach the melting point and form a deposit that is tightly bonded and difficult to remove. For this reason, it is important to determine the softening temperature of the coal ash. This temperature is determined by ASTM method D 1857, Standard Test Method for Fusibility of Coal and Coke Ash. Coals with an ash softening temperature of 2700 degrees F (1482.2 degrees C) or above are usually trouble free as to fouling of tube surfaces.

d) Sulfur. Sulfur in coal occurs in three forms: pyritic sulfur, sulfate sulfur, and organic sulfur. The combustion of sulfur adds slightly to the heating value of coal, but forms sulfur oxides (SOx) which are a closely regulated pollutant. Sulfur oxides also combine with water to form an acid if the combustion gas is cooled below its dew-point temperature. ASTM method D 2492, Test Method for Forms of Sulfur in Coal, is a standard test which determines the commonly recognized forms of sulfur in coal. Total sulfur is determined by ASTM method D 3177, Test Method for Total Sulfur in the Analysis Sample of Coal and Coke.

5.1.2 Fuel Oil. The term "fuel oil" denotes a large range of petroleum products. Fuel oils are graded according to specific gravity and viscosity, with the lightest being No. 1 and the heaviest being No. 6. Refer to Table 8.

5.1.2.1 Specific Gravity. The specific gravity of an oil is the ratio of its weight to the weight of an equal volume of water. It is commonly designated as "sp. gr. 60/60 F," indicating that both the oil and water are weighed and measured at a temperature of 60 degrees F (15.5 degrees C). The oil industry uses the API gravity scale, devised jointly by API and the National Institute of Standards and Technology (NIST). The relationship between specific gravity and API gravity is shown by the formula:

EQUATION: $$\text{Deg. API Gravity} = \frac{141.5}{\text{Specific Gravity @ 60 }^{\circ}\text{F}} - 131.5 \qquad (9)$$

Since the specific gravity appears in the denominator of the equation, the heavier the oil, the lower the API gravity.

5.1.2.2 Heating Value. The heating value per pound of fuel oil increases with an increase in API gravity but heating value per gallon of fuel oil varies inversely with API gravity because lighter oil contains more hydrogen. Refer to Table 8.

5.1.2.3 Viscosity. The viscosity of an oil is the measure of its resistance to flow. The viscosity of distillate oils is low enough not to be critical. The heavier oils (grades 5 and 6) generally require heating for satisfactory pumping and burning. Oil temperatures for efficient combustion are determined by individual burner manufacturers. For typical pumping temperatures, refer to Table 9.

5.1.2.4 Sulfur. As a rule, the percentage of sulfur in oil increases with the grade number. The amount of sulfur can range considerably within each grade due to variations in crude oils, refining processes, and blending. Refer to Table 8. The combustion of sulfur in oil will lead to the same pollution and corrosion problems as sulfur in coal.

Table 8
Typical Analyses and Properties of Fuel Oils

	No. 1 Fuel Oil	No. 2 Fuel Oil	No. 4 Fuel Oil	No. 5 Fuel Oil	No. 6 Fuel Oil
Weight, Percent					
Sulfur	0.01-0.5	0.05-1.0	0.2-2.0	0.5-3.0	0.7-3.5
Hydrogen	13.3-14.1	11.8-13.9	(10.6-13.0)(1)	(10.5-12.0)(1)	(9.5-12.0)(1)
Carbon	85.9-86.7	86.1-88.2	(86.5-89.2)(1)	(86.5-89.2)(1)	(86.590.2)(1)
Nitrogen	Nil-0.1	Nil-0.1	---	---	---
Oxygen	---	---	---	---	---
Ash	---	---	0-0.1	0-0.1	0.01-0.5
Gravity					
Deg. API	40-44	28-40	15-30	14-22	7-22
Specific	0.825 - 0.806	0.887 - 0.825	0.966 - 0.876	0.972 - 0.922	1.022 - 0.922
Lb per gal	6.87-6.71	7.39-6.87	8.04-7.30	8.10-7.68	8.51-7.68
Pour Point	0 to -50	0 to -40	-10 to +50	-10 to +80	+15 to +85
Color	Light	Amber	Black	Black	Black
Viscosity					
Centi- stokes @100 deg F	1.4-2.2	1.9-3.0	10.5-65	65-200	260-750
SS @100F	---	32-38	60-300	---	---
SSF @122F	---	---	---	20-40	45-300
Water & sediment, vol %	---	0-0.1	trace-1.0	0.05-1.0	0.05-2.0
Heating Value Btu/lb, gross	19,670- 19,860	19,170 - 19,750	18,280 - 19,400	18,100 - 19,020	17,410 - 18,990

(1) Estimated

Source: Steam/Its Generation and Use, Published by The Babcock & Wilcox Company, 1978 Edition.

Table 9
Lowest Suitable Pumping Temperatures

Viscosity at 100 F SSU (1)	Centistokes (2)	Pumping Temperature Degrees F
100	21	0 - 10
150	32	5 - 25
200	43	15 - 35
300	65	30 - 50
400	86	35 - 55
500	108	45 - 65
750	162	55 - 75
1000	216	60 - 80
1500	324	70 - 90
2000	432	80 - 100
3000	647	90 - 110
4000	863	95 - 115
5000	1079	100 - 120
7000	1511	110 - 130
8000	1727	115 - 135
10000	2159	120 - 140

(1) Saybolt Universal Seconds is a unit of measurement representing the time in seconds for 60 milliliters of fluid to flow through a capillary tube in a Saybolt Universal viscosimeter at a given temperature.

(2) Centistroke. A cgs unit of kinematic viscosity of a fluid having a dynamic viscosity of 1 centipoice and a density of 1 gram per cubic centimeter.

Source: Paul F. Schmidt, Fuel Oil Manual, Industrial Press, Inc., Fourth Edition.

5.1.3 Natural Gas. The combustible portion of natural gas consists principally of methane and ethane, with traces of propane and butane. There is also some nitrogen and carbon dioxide which are both non-combustible gases. Natural gas has a higher heating value range from 950 to 1,125 Btu per cubic foot (35 360 to 41 876 kJ/cubic meter). It is essentially free of ash and mixes extremely well to provide complete combustion with low excess air. The high hydrogen content of natural gas compared to coal or oil results in more water vapor in the flue gas and a correspondingly lower boiler efficiency. Refer to Table 10.

Table 10
Typical Analyses of Natural Gas

	Origin of Sample				
	Pittsburgh	Southern CA.	Birmingham	Kansas City	Los Angeles
Proximate Analysis (% by Volume)					
Methane CH_4	83.40	84.00	90.00	84.10	77.50
Ethane C_2H	15.80	14.80	5.00	6.70	16.00
Carbon dioxide CO_2	-----	0.70	-----	0.80	6.50
Nitrogen N_2	0.80	0.50	5.00	8.40	-----
Ultimate Analysis (% by Weight)					
Hydrogen H_2	23.53	23.30	22.68	20.85	20.35
Carbon C	75.25	74.72	69.26	64.84	69.28
Nitrogen N_2	1.22	0.76	8.06	12.90	-----
Oxygen O_2	-----	1.22	-----	1.41	10.37
Specific Gravity (Air = 1.0)	0.610	0.636	0.600	0.630	0.697
Higher Heating Value					
Btu per cubic foot (1)	1,129	1,116	1,000	974	1,073
Btu per Lb of Fuel	3,170	22,904	21,800	20,160	10,090
Theoretical Air					
Lb per 10,000 Btu	7.18	7.18	7.50	7.19	7.18
Total Moisture					
Lb per 10,000 Btu	0.915	0.917	0.971	0.933	0.911

(1) At 60 F and 30 inches of Mercury

Source: American Gas Association (AGA), GMC, Gas Measurement Committee Report No.1.

5.1.4 Wood. Today, the use of wood for steam generation is largely confined to wood chip burning and is generally used in locations where it is available as a by-product or waste from the lumber or paper industry. The moisture content can vary widely to the extent that handling and combustion of the fuel can be difficult. Refer to Table 11. Ash content is lower than ash in coal and ash disposal can be less of a problem.

Table 11
Available Energy in Wood

Moisture, %	Heating value, Btu/Lb	Lb Water/Lb Wood
0	8,750	0.00
20	7,000	0.25
50	4,375	1.00
80	1,750	4.00

Source: Marks' Standard Handbook for Mechanical Engineers, Baumeister, Avalone & Baumeister, 1978.

5.1.4.1 Chipped Wood. Fresh timber contains 45 to 55 percent moisture, mostly in the cell structure of the wood. After air drying, the moisture content reduces to 18 to 25 percent. Kiln-dried wood contains about 8 percent moisture. Some impurities found in wood fuel are sand in bark and dirt from the harvesting operation. The heating value of chipped wood as harvested averages about 4,200 Btu/lb (9 770 kJ/kg) although the heating value of dry wood averages approximately 8,800 Btu/lb (20 504 kJ/kg). Refer to Table 12.

5.1.4.2 Bark. Bark is a common waste product in paper mills from debarking of tree trunks. Bark received from barking drums often contains sand and dirt and as much as 65 percent moisture and has very little fuel value unless this material is dried. Once dried, this fuel has essentially the same heating value as the wood. Bark readily absorbs moisture from the air and even if dried, it soon has reabsorbed moisture in storage. Bark is not considered as a suitable fuel because of the difficulty in its burning, handling, and storage.

Table 12
Typical Analysis of Dry Wood Fuels

	Most Woods
Proximate Analysis, %	
Volatile Matter	74.0 - 82.0
Fixed Carbon	17.0 - 23.0
Ash	0.5 - 2.2
Ultimate Analysis, %	
Carbon	49.6 - 53.1
Hydrogen	5.8 - 6.7
Oxygen	39.8 - 43.8
Sulfur	-----
Nitrogen	0.0 - 0.1
Heating Value, Btu/Lb	8,560 - 9,130
Moisture, as received, %	36 - 58
Ash Fusion Temperature, deg F	
Initial	2650 - 2760
Fluid	2730 - 2830

5.1.4.3 Hog Fuel. The trimmings and bark left over from the manufacture of lumber must be resized in a "hog" to facilitate feeding, rapid combustion, and storage. These products, together with varying amounts of sawdust and shavings are referred to as hog fuel. This fuel, as delivered to the furnace, can average more than 50 percent moisture, most of which is in the cellular structure of the wood.

5.1.5 Solid Waste. Solid waste is a very complex fuel because it contains a wide variety of both combustibles (paper, wood, food, etc.) and noncombustibles (cans, glass, various metals, etc.). The combustibles may also include plastics which can be toxic when burned. Its value as an alternate energy source is proportional to the amount of effort spent preparing it for use. The approximate average heating value of typical solid waste is 4,500 Btu/lb (10 485 kJ/kg). Refer to Table 13.

Table 13
Heating Values and Composition of Typical Unprepared and Prepared American Solid Waste

	Unprepared Refuse			Prepared Refuse
	As Received(1)	Coarse(2)	Fluff(3)	Double Screened(4)
Heating Value, Btu/lb	4,500	4,600	5,100	5,900
Analysis, % by Weight				
Ash & Inerts	24	20	21	13
Moisture	30	29	22	24
Combustible Matter	46	51	57	63

(1) Municipal solid wastes (MSW) used as fuel in as-discarded form without oversize bulky waste such as water heaters, etc.
(2) MSW processed to coarse particle size with glass and ferrous metal removal such that 95 percent by weight passes through a 6-inch square mesh screen.
(3) Shredded fuel derived from MSW processed for the removal of metal, glass and other entrained inorganics such that 95 percent by weight passes through a 2-inch square mesh screen.
(4) Shredded fuel processed similarly to (3) except for additional screening. (Samples not from same processing facility as (3).)

5.1.5.1 Mass Burning. Mass burning of unprepared refuse in heat recovery boilers can be a technically reliable, environmentally acceptable, and an economic solution to the disposal of refuse when usable energy is generated.

5.1.5.2 Refuse Derived Fuel (RDF). Refuse derived fuel (RDF) refers to solid waste that has been sorted and shredded into an approximate uniform size. Separation of noncombustible materials is a part of this process. This process should be carefully compared to the mass burning process as this additional processing of the fuel may not be cost effective. Uniformity of the refuse for burning is improved, but the capacity to deliver RDF to the incinerator boiler on a reliable basis has been a technical problem. Preparation of refuse by shredding and separation of combustible materials prior to combustion provides a more uniform product to burn. Prepared refuse of the composition and heating values shown in Table 13 is fired by itself or in combination with coal.

5.2 Fuel Applications and Equipment

5.2.1 Applications. Selection of fuel burning equipment for central heating plants is basically dependent on fuel selection. The availability of the fuel throughout the projected life of the facility must be considered or the facility should be designed to convert to another available fuel at some future date when the original fuel may become scarce or prohibitive in cost. The required pollution abatement equipment and/or systems which will conform to applicable codes and regulations must be considered.

5.2.2 Coal Firing. The selection of the most appropriate burning equipment for a specific application is dependent on factors which include economics, operating characteristics, type of coal, and environmental standards. Currently, the most common coal fired boilers fall into two main categories: stokers and pulverized coal units.

5.2.2.1 Stokers. There are four main types of coal stokers which are classified according to the way the fuel is fed and by the type of grate used. These types are the underfeed stoker, the vibrating-grate stoker, the traveling-grate stoker, and the spreader stoker. Refer to Table 14.

a) Underfeed Stoker. The underfeed stoker is generally applied to the small capacity boilers in a range 3,000 to 25,000 lb of steam per hour (0.378 to 3.15 kg/s). See Figure 12. An agitator on the hopper assures a continuous supply of coal to the stoker feed ram. The coal ram provides a positive feed from the hopper to the single retort. A heavy pusher bar with auxiliary blocks at the bottom of the retort distributes the coal to produce a uniform fuel bed from front to back of the unit. The underfeed stoker will handle a wide range of coals having ash fusion temperatures above 2,400 degrees F (1315.6 degrees C). Coal with ash-softening temperature less than 2,400 degrees F (1315.6 degrees C) will normally form clinkers when applied to the underfeed type stoker. Free-burning type coals are not normally used with the underfeed type stoker. The modern underfeed stoker is equipped with overfire air jets to provide turbulence to mix volatile hydrocarbons with the air for complete combustion.

b) Vibrating-Grate Stoker. The vibrating-grate stoker usually has a range of 10,000 to 25,000 lbs of steam per hour (1.26 to 3.15 kg/s) and is used extensively in mass burning applications. See Figure 13. It is unique in that it combines water cooling protection of the grate surface with intermittent grate vibration for movement of the fuel bed down the inclined grate. The frequency of the vibration of the grates is used to regulate the combustion rate. The ash is automatically discharged at the rear. It requires high quality boiler feedwater due to localized high temperature spots along the cooling tubes when grate sections are exposed to furnace temperatures; these hot spots increase the possibility of scaling. As with traveling-grate stokers, the vibrating-grate stoker has individually controlled air zones for better air flow control.

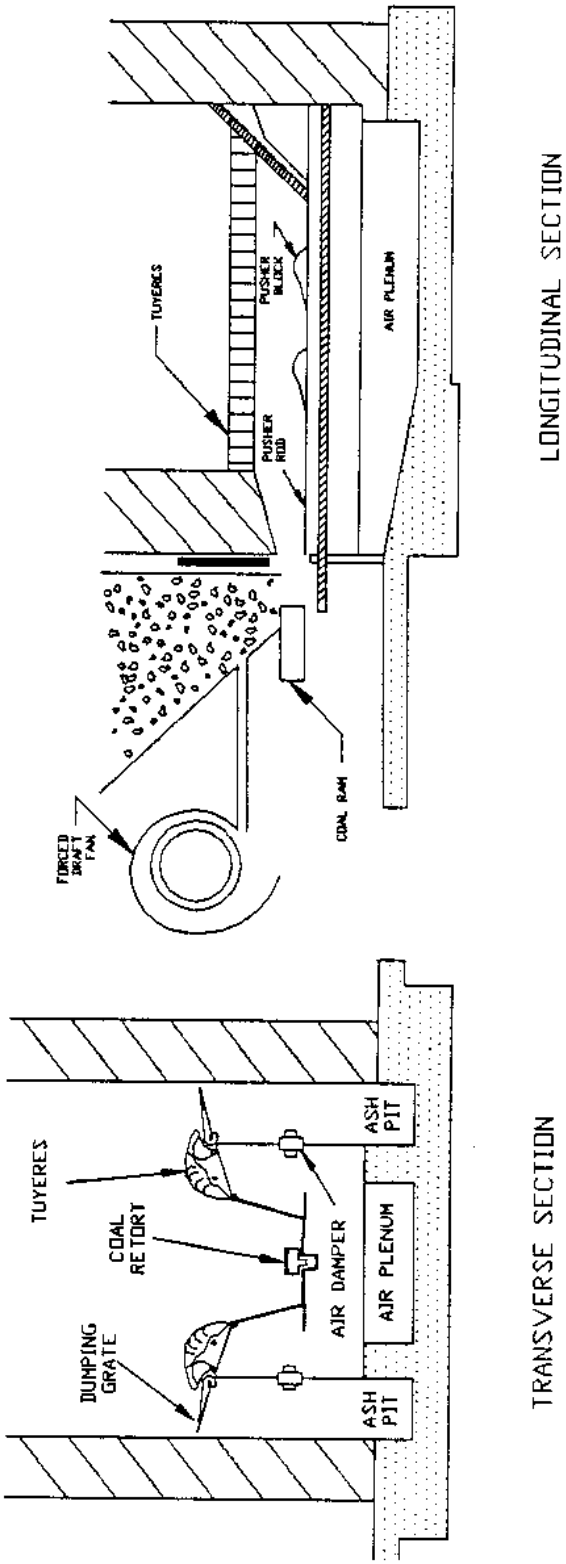

Figure 12
Single Retort Underfeed Stoker

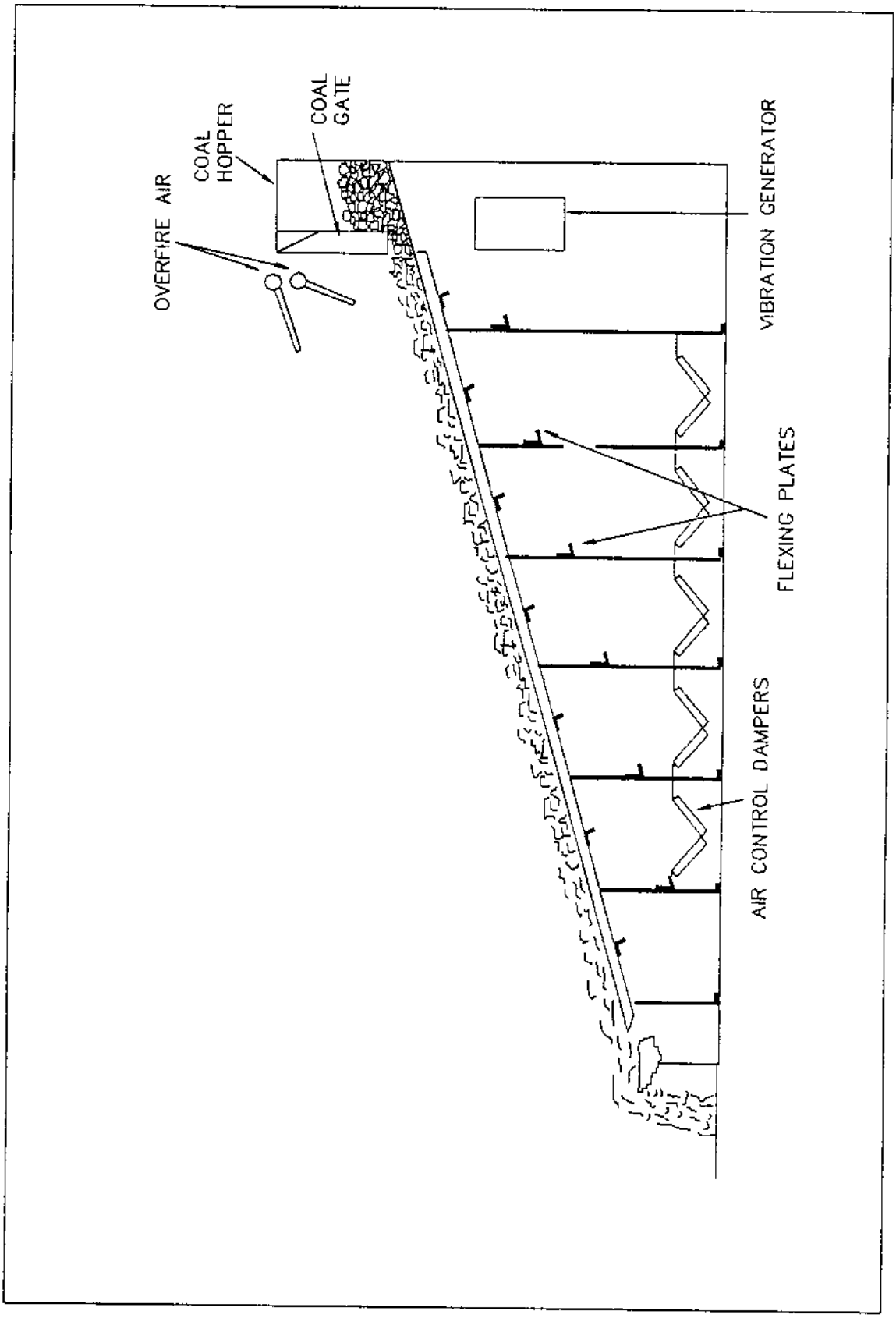

Figure 13
Vibrating Grate Stoker

c) Traveling-Grate Stoker - Front Gravity Feed. For plant capacities in the range of 20,000 lb of steam per hour to 160,000 lb of steam per hour (2.52 to 20.16 kg/s), the traveling-grate stoker method of firing can be used for moderately changing wide load swings. See Figure 14. These boilers will handle fuels that have widely varying characteristics, from low volatile anthracite, coke breeze to high and medium volatile bituminous. Refer to Table 14. They are particularly efficient with free-burning Mid-West coals and can handle lignite and sub-bituminous coals. These boilers are characterized by the coal being fed onto a grate at one end of the furnace, the coal burning on the grate as it travels through the furnace, and the ash being dumped at the opposite end of the furnace. A coal gate is used to control the thickness of the coal bed entering the furnace. The typical furnace configuration includes a front refractory arch and a long rear arch, which are important when using the traveling-grate stoker to burn very low volatile fuels, such as anthracite or coke breeze. The hot front arch is used to maintain combustion and heat coal entering the furnace. The rear arch directs any remaining volatile matter from the burnout zone to the flame zone where it can be burned. The feature of the traveling-grate stoker that provides for the utilization of such a wide variety of fuel types is the under-grate air zoning. These units normally have from five to nine individual air zones which can control the amount of air admitted to the fuel bed as it travels from the free end of the stoker to the discharge. Although this provides the stoker operation with tremendous flexibility to obtain complete combustion with the various sizes and types of fuel, strongly caking coals have a tendency to mat and prevent proper air distribution. Since the fuel bed on the traveling-grate stoker is not agitated by vibration as the bed (usually 4 inches to 6 inches (101.6 mm to 152.4 mm) depth) is moving from the feed end toward the discharge end, the amount of particulate fluidization is very low. This means that the revolving grate stoker has a low particulate pollution characteristic as compared to other types of fuel burning strokers. Chain grate stokers are not recommended except to burn low fusion coal with high clinkering tendencies.

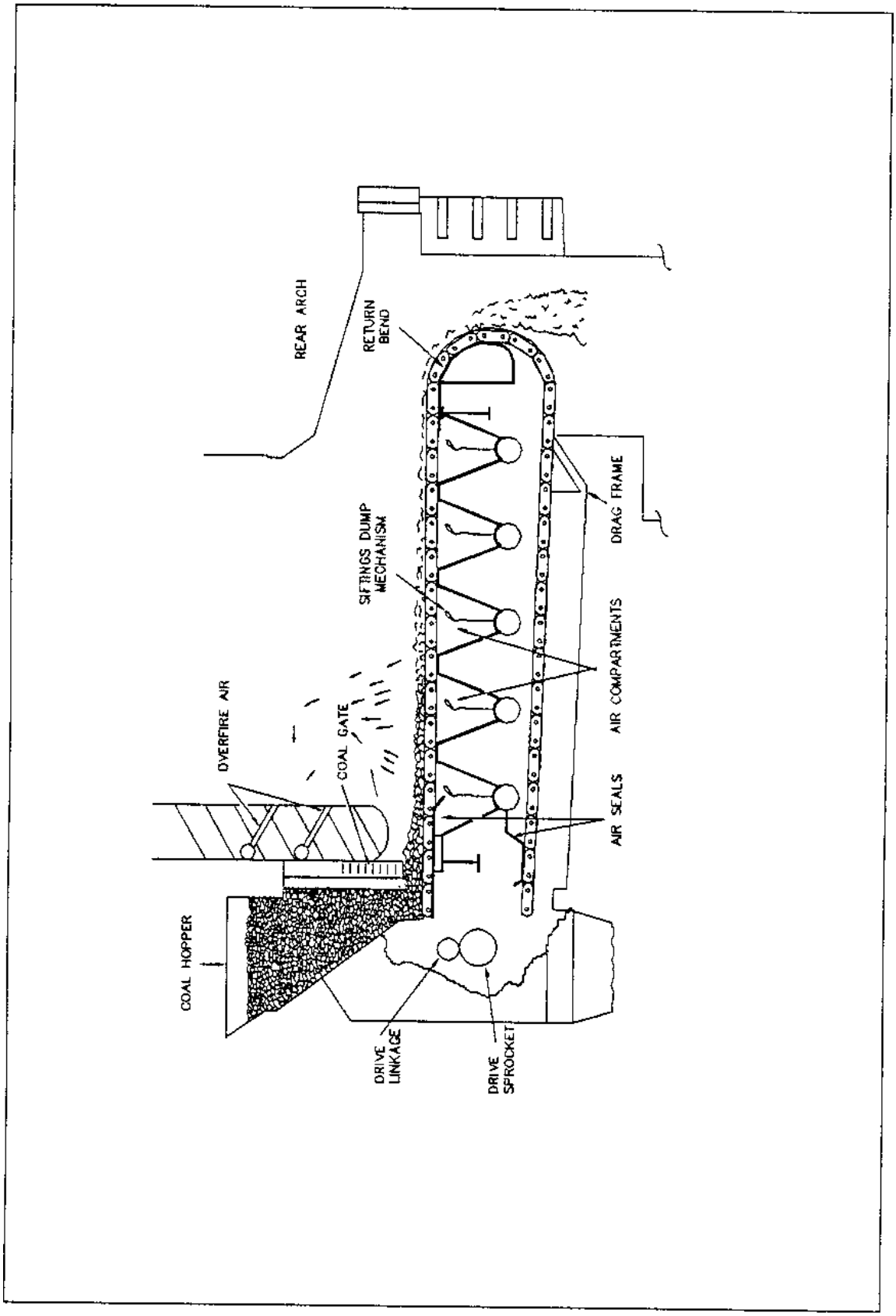

Figure 14
Traveling Grate Stoker

Figure 14
Traveling Grate Stoker

Table 14
Stoker Selection Criteria

Type of Stoker	Typical Unit Size Range (PPH Steam)	Fuel Requirements: Size	Fuel Requirements: Characteristics
Underfeed	3,000 to 25,000	1-1/4" to 1-1/2" nut, pea, and slack with appropriate proportions of each not to exceed 20% through 1/4" round hole screen.	Free burning to medium caking (free swelling index less than 5). Volatile matter 30 to 40%. Ash 5 to 10%. Ash fusion (reducing atmosphere H=1/2W) minimum 2400 deg. F minimum heat content 12,500 Btu/lb.
Vibrating-grate (front gravity feed)	10,000 to 25,000	1-1/4" to 1-1/2" nut, pea, and slack with appropriate proportions of each not to exceed 20% through 1/4" round hole screen.	Free burning to medium caking (free swelling index less than 5). Volatile matter 28 to 40%. Ash 6 to 12%. Ash fusion (reducing atmosphere H=1/2W) minimum 2500 deg. F. Minimum Heat content 12,000 Btu/lb.
Traveling-Grate (front gravity feed)	20,000 to 160,000	1" to 0" top size with maximum 60% through 1/4" round hole screen.	Free burning to medium caking (free swelling index less than 5). Volatile matter 30 to 40%. Ash 6 to 15%. Ash fusion (reducing atmosphere H=1/2W) minimum 2750 deg. F. Minimum heat content 11,000 Btu/lb.
Overfeed Spreader (traveling grate)	25,000 to 400,000	1-1/4" to 3/4" X 0 " with maximum 40% through 1/4" round hole screen.	Bituminous A & B, sub-bituminous or lignite. Volatile matter 25 to 40%. Ash 6 to 15%. Ash fusion (reducing atmosphere H=1/2W) minimum 2200 deg. F. Minimum heat content 11,500 Btu/lb.

Table 14 (Continued)
Stoker Selection Criteria

Type of Stoker	Typical Unit Size Range (PPH) Steam	Max Grate Burning Rates Btu/Hr per Cubic Foot Volume	Max Furnace Heat Release Rates(1) Btu/Hr per Cubic Foot of Furnace	Combustion Limit(2) (Turndown)
Underfeed	3,000 to 25,000	360,000	30,000	Banked Fires to Full-Load
Vibrating-Grate (front gravity feed)	10,000 to 25,000	450,000	30,000	Banked Fires to Full-Load
Traveling-Grate (Front Gravity Feed)	20,000 to 160,000	450,000	35,000	6 to 1
Overfeed Spreader (traveling-grate)	25,000 to 400,000	700,000	300,000	2.8 to 1 3.5 to 1

Information in this table is gathered from several stoker manufacturers' recommendations.

(1) All grate heat release rates are based on maximum continuous rating (MCR) with allowance for 110 percent rating for 2 hour emergency peak per 24 hours.
(2) Further turndown beyond that indicated may be obtained dependent upon allowable emission requirements and/or pollution abatement equipment applied.

d) Spreader Stoker. The spreader stoker has a range of 25,000 lbs of steam per hour (3.15 kg/s) and up. The spreader stoker is characterized by a thin bed and partial burning of coal particles in suspension. See Figure 15. Since the smaller coal particles are burned in suspension, this stoker is responsive to load fluctuations. This characteristic, together with a non-clinkering thin bed on the grate, provides a unit capable of firing a wide range of coal grades and types. The spreader stoker has high availability, ease of operation, and good efficiency. The suspension burning causes a high

particulate loading of the burning gases within the furnace which, without fly ash reinjection, would result in a high carbon loss in the fly ash. For units with capacities of 25,000 lbs of steam per hour (3.15 kg/s) and over, front discharge traveling-grates are commonly used with spreader stokers. Dump, vibrating, reciprocating and oscillating grates are also available. With a high particulate loading, the spreader stoker requires the use of electrostatic precipitator or baghouse collectors to prevent particulate pollution.

5.2.2.2 Pulverized Coal (PC) Firing. Pulverized-coal-fired boilers are typically used in applications of 100,000 PPH of steam and above. In PC boilers, coal is finely ground in a pulverizer or mill, blown into the furnace, and burned in suspension. The rate of fuel flow is controlled by a variable speed coal feeder which supplies coal to the pulverizer. Although some of the coal ash forms deposits on tubes and some falls to the bottom of the boiler, most of the ash is swept out with the flue gas stream. The PC boiler must therefore have a bottom ash hopper, soot blowers, and a particulate collection system. Although bituminous coals are the most common fuel in PC boilers, almost any coal can be used. The most important properties in selecting a fuel for PC firing are; ignition and flame stability, ash characteristics, and grindability. Flame stability can be insured by firing fuels with a minimum of about 20 percent volatile matter. The amount of ash should be minimized and the ash fusion temperature should be sufficiently high to avoid slagging problems. The ease of pulverizing a coal is a measure of its grindability. This is usually indicated on the Hardgrove Grindability Index where those with a low index are harder to grind. The principal types of pulverizers can be classified under high, medium, and slow speeds. Proper air flow is essential to the operation of any type of pulverizer. The preheated air performs three functions; moving and separating the coal within the mill, drying the coal, and transporting the coal to the furnace.

a) High Speed Pulverizers. The simplest pulverizer is the high speed impact mill. In this machine, a series of swinging hammers mounted on a shaft impact coal fed into the grinding chamber which is lined with abrasion resistant material. A disadvantage to these mills is their susceptibility to damage by foreign materials. The main advantage is the low initial cost of these units.

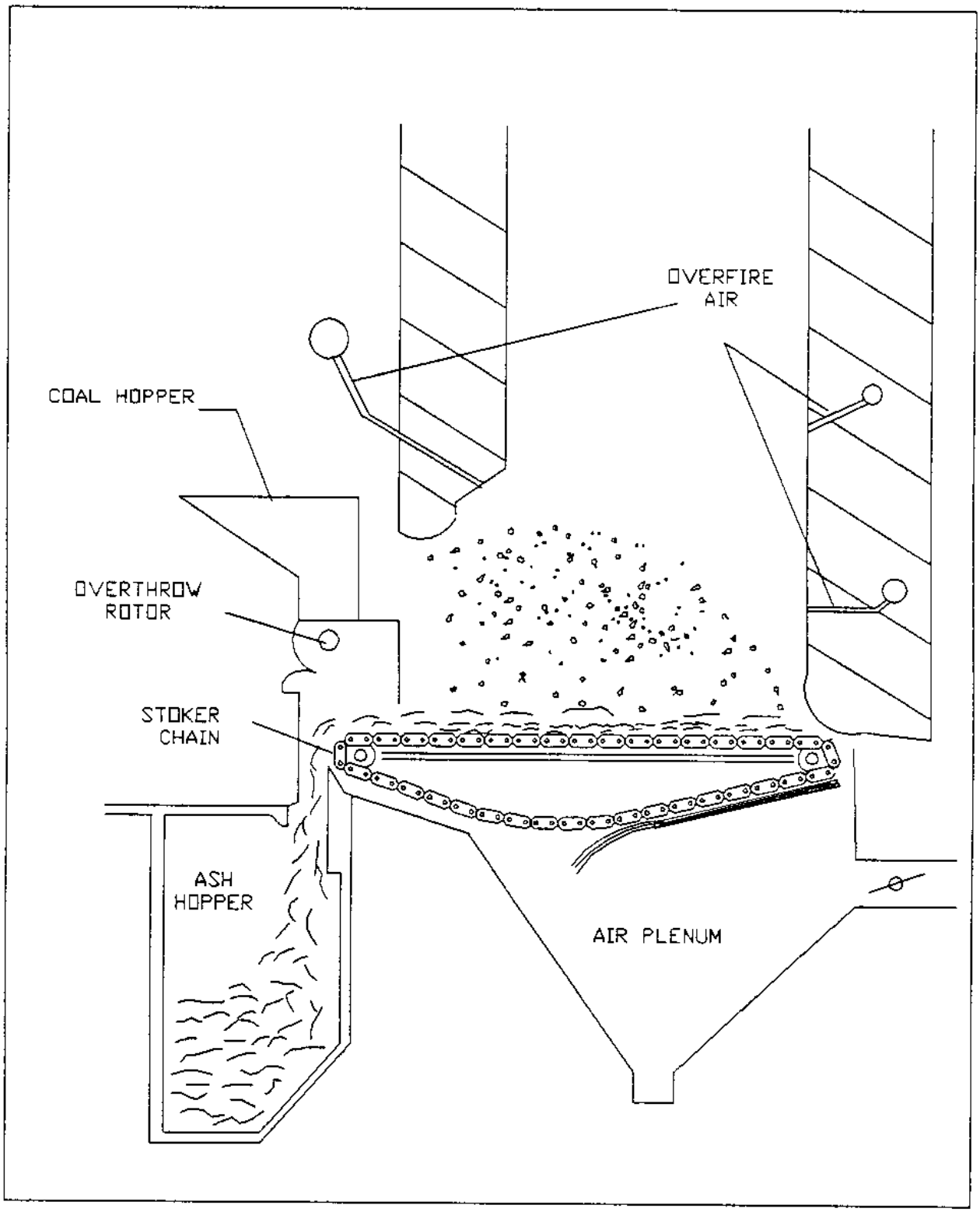

Figure 15
Overfeed Spreader Stoker with Traveling Grate

b) Medium Speed Pulverizers. In this category, there are two major types; the ball-and-race type and the roller-type. Both types use the same principle of pulverizing by a combination of crushing, impact, and attrition between grinding surfaces and material. The ball-and-race type consists of a row of balls with one race below them and one race above them. As the lower race is rotated, coal is crushed between the balls and both races. The roller type consists of a series of rollers running close to an outer grinding ring. This type of pulverizer can be of two designs; the ring can be stationary with moving rollers, or the ring can rotate around stationary rollers. This type of pulverizer has a somewhat higher initial cost than the high speed type, but advantages include less maintenance, reduced outage time, and maintained product quality over the entire operating period.

c) Slow Speed Pulverizers. This type of pulverizer is usually referred to as the ball or ball tube mill. These mills are essentially slow turning horizontal cylinders filled with various sized steel balls. As the tube rotates, the coal and steel balls are mixed together. Impact of the falling balls and attrition pulverize the coal which is carried out by preheated air. High initial cost, high power input, and large floor-space requirements are some of the disadvantages of this type of mill. Advantages include high reliability and low maintenance costs.

5.2.3 Oil and Natural Gas Firing. Gas and oil burners are furnished for various services in a multiplicity of types and arrangements. Combination burners may also be obtained which will burn either gas or oil alone or in a specialized class to burn gas and oil simultaneously. The functions of a burner are to deliver fuel and air to the combustion space, mix the fuel and air and provide for continuous ignition of the mixture. Burners should be considered as a part of the boiler and should be subjected to the tests, performance guarantees and warranty requirements of the boilers.

5.2.3.1 Gas Burners. Gas burners are generally classified as premixing and nozzle mixing. In the premixing type, which includes inspirator, aspirator, and fan mix types, the primary air and gas are mixed at the source point upstream of the burner ports. In the nozzle mixing type, gas and air do not mix until they leave the burner ports. Burners of the nozzle mixing type are recommended. Types of burners are listed below.

a) Inspirator. The inspirator type uses a jet of gas which has sufficient energy to induce the proper quantity of primary air in proportion to the fuel.

b) Aspirator. The aspirator type uses air as the fluid which has the necessary energy to induce the gas.

c) Fan Mixing. The fan mixing type admits air and fuel to the blower inlet for mixing.

d) Nozzle Mixing. The nozzle mixing type generally provides a higher turn-down ratio and requires lower pressure combustion air.

5.2.3.2 Oil Burners. Oil burners must atomize and vaporize oil to get the oil into combustible form. Large burners usually prepare the oil for combustion by first atomizing the fuel and injecting it into the combustion space for final heating, vaporization and mixing with combustion air. Atomization is generally obtained by one of the following methods.

a) Horizontal Rotary Cup. In this method, a thin film of oil is spun from the rim of a cup being rotated at high speed. The oil enters a cone of high velocity primary combustion air where atomization is obtained. This type burner is capable of being modulated over a wide range, but is seldom used because of high maintenance costs and inefficiencies.

b) Mechanical Pressure Atomizing. This method expands the oil by pressure through a small orifice thereby breaking it into a spray of very fine droplets. This burner is not adaptable to appreciable modulation as a drop in pressure results in rapid deterioration in atomizization efficiency. Mechanical atomization requires the highest oil pressure and yields the poorest performance.

c) Steam Atomizing. In this method, oil is delivered to the nozzle at pressures ranging from 40 to 150 psi (276 to 1035 kPa) with steam pressure not less than 20 to 50 psi (138 to 345 kPa). In most cases, steam atomizing can produce a turn-down of up to 10:1 at high efficiency. Steam for atomization must be dry as moisture causes erosion which impairs burner performance and causes pulsations which leads to loss of ignition. If steam is wet, oil cannot be properly atomized regardless of the amount of steam utilized. In general some superheat, possibly up to 50 degrees F (10 degrees C), is desirable. The steam supply line should be of proper size, well insulated, and adequately drained. The first cost of a steam atomizing system is less, but it is about 1 percent less energy efficient than air atomization. The steam atomizing burner has a higher turndown rate than the air-atomizing types and is used whenever air atomization cannot obtain the same turndown ratio.

d) High-Pressure Air Atomizing. This method is similar to the steam-atomizing type except air under pressure is used instead of steam. High-pressure air-atomizing burners utilize air pressures of 30 psi (207 kPa) and above and can operate within the same range of oil pressures and preheat temperatures as the steam atomizing type.

e) Low-Pressure Air-Atomizing Type. This system generally operates within 1/2 to 5 psig (3.5 to 34.5 kPa) air pressure and 5 to 20 psig (34.5 to 138 kPa) oil pressure.

f) Low-Excess Air Burners. These burners are designed to operate with excess air down around 5 percent. The burners are high in first cost, and require excessive supervision and maintenance. Low-excess air burners are used mainly to reduce nitrogen oxide (NOx) emissions.

g) Low-NOx Burners. Low-NOx burners have a wide variety of designs. The principle of all low-NOx burners is the same; they inherently generate lower NOx emissions due to internal staging of fuel combustion, see reference: EPA/625/5-86/020, Nitrogen Oxide Control for Stationary Combustion Sources.

5.2.3.3 Oil Atomization. Oil burner atomizing efficiencies and cost may vary widely due to the method of atomization, fuel characteristics, and cost of energy for heating oil or power to drive pumps and blowers. Satisfactory atomization depends upon proper control of pressures, temperatures, and viscosity or fluidity of the fuel. Adequate inspection, maintenance, and repair schedules are essential for efficient operation. Final selection of the methods of atomization together with the arrangement and degree of automatic controls, should be based on design and performance data obtained from the burner manufacturers. For preliminary operating and plant heat balance calculations, the following estimates may be used for final comparison with manufacturer data:

a) Amount of atomizing agent required for each gallon of oil burned per hour:

Low-pressure air	- 10 to 15 scfm (0.282 to 0.433 square meters)
High-pressure air	- 2.5 to 3 scfm (0.0704 to 0.0845 cubic meters)
Steam	- 2 to 8 lbs of steam per hr (0.907 to 3.63 kg/hr)
Mechanical pressure	- none
Rotary cup	- none

b) Horsepower required to atomize each gallon of oil burned per hour:

Low-pressure turbo blower (16 psig (110.4 kPa))	- 0.1 Hp (0.075 kW)
High-pressure compressor (75 psig (517.5 kPa))	- 0.4 Hp (0.030 kW)
Steam (100 psig (690 kPa))	- 0.12 Hp (0.09 kW)
Mechanical pressure (100 psig (690 kPa))	- 0.32 Hp (0.24 kW)
Rotary cup	- 0.050 Hp (0.0373 kW)

5.2.3.4 Recommendations

a) Burners of the nozzle mixing type are recommended.

b) It is recommended that direct-ignition of any grade oil not be allowed. All ignition systems should be spark-ignited-pilot ignition type. Use of propane gas for this purpose may present a fire hazard. Because of its high density, leaking propane may accumulate in low-lying areas in the plant. Light gases such as natural gas should be used when available.

c) On all burners where oil will be the only fuel, it is recommended that the flame sensing elements be restricted to the frequency-response (lead sulfide) type or the ultraviolet type.

d) All oil burners should have two guns, one of which may be removed for cleaning while the other maintains the load.

e) An economic analysis should determine if oil burners should be steam or air atomizing unless steam is required for greater turndown. When air is used for atomizing, a steam connection should be provided for emergency use.

f) All burners should have automatic recycling controls.

5.2.4 Wood Firing. Combustion systems for wood are usually designed specifically for the material and mixture of fuels to be burned. When the moisture content is high, over 60 to 65 percent, supplemental firing of coal, oil, or gas can be used or the wood must be mixed with low-moisture fuels so that enough energy enters the boiler to support combustion. Dry wood may have a heating value of 8,750 Btu/lb (20 388 kJ/kg); but at 80 percent moisture, a pound of wet wood has a heating value of only 1750 Btu/lb (4078 kJ/kg). Table 11 shows the moisture-energy relationship.

The usual practice when burning wood is to propel the wood particles into the furnace through injectors along with preheated air with the purpose of inducing high turbulence in the boiler. The wood is injected high enough in the combustion chamber so that it is dried and all but the largest particles are burned before they reach the grate at the bottom of the furnace. Spreader stokers and cyclone burners work well for this application. Before choosing wood as a fuel to produce steam or HTW, methods should be researched thoroughly. Success of similar operations, adequacy of fuel source, and economics should be evaluated.

5.2.4.1 Suspension Burning of Wood. Small wood chips or saw dust may be blown into the furnace chamber and burned in suspension. The ash or unburned particles are collected on a traveling-grate and transported to an ash pit. In wood burning applications, heat releases have been as high as 1,000,000 Btu/square foot/hr (3155 kJ/square meter per s) of active grate area.

5.2.4.2 Wood Stokers. Wood chips and waste products such as bark and hog fuel are successfully burned in stokers. Spreader stokers and vibrating-grate stokers have been primarily used for this fuel.

5.2.5 Solid Waste Firing. Solid waste, like wood, derives most of its heating value from its cellulose content. The firing methods are therefore very similar for the two fuels.

5.2.5.1 Mass Burning. In mass burning, water-wall incinerator type boilers use vibrating grates, underfire and overfire air systems, induced draft and

pollution control (normally electrostatic precipitator) systems. This type of incinerator is field erected and ranges in capacities from 150 tons/day (136 050 kg/day) and above. Metal corrosion/erosion is a continuing technical problem in this type of unit. The lower waterwall surfaces in particular must be protected from the products of combustion. Such protection is required at least up to a level where the furnace atmosphere is consistently oxidizing. Silicon carbide refractory is generally selected as the tube protection material because of its comparatively high heat transfer coefficient. This permits rapid transfer of heat to the tube wall and reduces refractory surface temperatures to minimize slagging. To minimize metal waste, use the following precautions:

a) Keep gas velocities low.

b) Use wide tube spacing.

c) Use silicon carbide furnace protection.

d) Minimize metal temperatures.

e) Maintain proper combustion air distribution.

f) Utilize an overfire air system.

5.2.5.2 Refuse Derived Fuel (RDF). Coarse RDF undergoes semi-suspension burning on a thin fuel bed with non-agitating grates in watertube furnaces. Fluff or double-screened RDF undergo combustion in full-suspension with pulverized coal in Btu ratios of up to 20 percent refuse. Closer attention must be given to the combustion compatibility and bottom ash characteristics when firing fuels in full suspension combination fuel units (no grates for burnout of oversize particles). Research should be conducted to determine whether or not RDF can be produced and burned on an economical, reliable basis before being considered a viable alternative to mass burning of unprepared refuse. Some significant problems are involved in this alternative which affect feasibility. These are primarily:

a) Reliability of shredding equipment.

b) Economic separation of noncombustibles.

c) Material handling and storage for reliable flow of prepared refuse to the combustion chamber.

5.3 Combustion Air

5.3.1 Combustion Air Requirements. The ideal combustion air system has no excess oxygen or unburned combustibles exiting from the furnace. Firing a fuel with this theoretical (stoichiometric) amount of air would require

impracticably long residence time and infinite mixing of air and fuel. Firing of a fuel therefore requires excess air to assure sufficient interaction between the oxygen in the air and the combustibles in the fuel and to prevent discharge of excessive combustibles in potentially explosive mixtures of oxygen and fuel. Excess combustion air is generally in the range shown below:

5.3.1.1 Coal Firing

a)	Underfeed stoker	20 to 50 percent
b)	Vibrating-grate stoker	30 to 60 percent
c)	Traveling-grate stoker	15 to 50 percent
d)	Spreader stoker	30 to 60 percent
e)	Pulverized coal burner	15 to 20 percent

5.3.1.2 Oil Firing

a)	Register type burners	5 to 10 percent
b)	Multifuel burners	10 to 20 percent

5.3.1.3 Natural Gas Firing

a)	Register type burners	5 to 10 percent
b)	Multifuel burners	7 to 12 percent

5.3.1.4 Wood Firing

a)	Stoker	25 to 50 percent
b)	Suspension burning	25 to 50 percent

5.3.1.5 Solid Waste

a)	Mass burning	80 to 100 percent
b)	RDF burning	35 to 60 percent

5.3.2 Combustion Calculations (Example Using Coal). In order to make combustion calculations, it is necessary to use the molecular weight of any substance. The molecular weight of carbon is 12, hydrogen is 2, and oxygen is 32; therefore, the molecular weight of carbon dioxide is 12 plus 32 or 44. To calculate the amount of air required for combustion, the concept of the mol is used. A molecular weight expressed in pounds is called a pound.mol. For example, using a bituminous coal of the following analysis (burned at 30 percent excess air), the following information can be calculated:

Proximate Analysis		Ultimate Analysis % by Weight		Mol Weight
Moisture	7.50	Carbon	67.24	12
Volatile Matter	36.74	Hydrogen	4.50	2
Fixed Carbon	46.76	Sulfur	2.92	32
Ash	9.00	Oxygen	7.52	32
		Nitrogen	1.32	28
		Water	7.50	18
		Ash	9.00	
		Btu/lb.	12100 (28 193 kJ/kg)	

5.3.2.1 Oxygen Required per 100 Pounds of Coal. The calculation of the air required for combustion is made on an oxygen balance because oxygen is the only element common to all oxidizing reactions. Oxygen combines with the three combustibles in the following proportions:

$$C + O_2 \rightarrow CO_2$$

$$H_2 + 0.5O_2 \rightarrow H_2O$$

$$S + O_2 \rightarrow SO_2$$

O_2 for C	1.0 x (67.24/12)	= 5.60 lb.mol O_2
O_2 for H_2	0.5 x (4.50/2)	= 1.13 lb.mol O_2
O_2 for S	1.0 x (2.92/32)	= 0.09 lb.mol O_2
		S))))))))))))Q
Total		= 6.82 lb.mol O^2
Less O_2 in fuel	7.52/32	= 0.24 lb.mol O_2
		S))))))))))))))Q
O_2 required (stoichiometric)		= 6.58 lb.mol O_2
O_2 in excess air	6.58 x 0.30	= 1.97 lb.mol O_2
		S))))))))))))))))Q
Total O_2 req'd with 30% excess		= 8.55 lb.mol O_2

5.3.2.2 Air Required per 100 Pounds of Coal. Oxygen in air is equal to 21 percent by volume, therefore:

$$(8.55 \text{ lb.mol } O_2) \times \frac{(100 \text{ lb.mol Air})}{(21 \text{ lb.mol } O_2)} = 41.00 \text{ lb.mol Air}$$

One lb.mol of air is equivalent to 29 lbs. The total air required for 100 lbs coal is:

$$(41 \text{ lb.mol Air}) \times \frac{(29 \text{ lbs})}{(\text{lb.mol Air})} = 1189 \text{ lbs Air/100 lb Coal}$$

5.3.3 Products of Combustion. The weight of the gaseous products leaving the boiler stack, assuming complete combustion of the coal used in the above example, is equal to the weight of the fuel less the ash content plus the weight of total air required.

Net weight of fuel	100 lbs
Less ash content	9 lbs
Total combustibles	91 lbs
Weight of combustibles	91 lbs
Weight of air	1189 lbs
Total gaseous products (flue gas)	1280 lbs

5.4 Fuel and Ash Handling

5.4.1 Coal

5.4.1.1 Coal Delivery. The total cost, reliability of supply, and uniformity of the properties of coal as received by the consumer are effected by the distance shipped and the means of transportation used. In the United States, coal is transported mainly by barge, rail, and truck. This accounts for up to 75 percent of delivered coal cost. Transportation effects the as-received condition of the coal. Factors affected by transportation are freezing in transit, changing moisture content, or size degradation.

a) Barge Delivery. Transportation by barge is the most economical over long distances. The main drawback of this type of transport is its inflexibility. Plants must be located on or near waterways large enough to receive barges which can carry from 1,000 to 1,500 tons (907 000 to 1 360 500 kg) of coal. Coal delivered by barge is often off-loaded by clamshell bucket to conveyor systems for movement to storage areas.

b) Railroad Car Delivery. Coal is transported by rail in cars ranging from 50 to 100 tons (45 350 to 90 700 kg) with an effective range from 500 to 800 miles (805 to 1 288 km) along established railways. This method of delivery is very slow and inflexible. Although rail delivery costs may exceed the cost of coal at the mine, it is the best available option for many areas without waterway access. Additional equipment needed for rail delivery may include thawing equipment, car pullers and scales, and special unloading hoppers.

1. Railroad Car Thawing Equipment. When high moisture coal is shipped in freezing temperatures, unloading the cars becomes a major problem. The need for special equipment to unload frozen coal will depend on the location and size of the plant. In a plant where below-freezing temperatures are infrequent, manual operation to break the coal out of the cars will be sufficient. In regions where frozen coal is a regular occurrence, thawing sheds or pits are often necessary. Top mounted car shakers which transmit a vibratory action to the railroad car can be used with the thawing units or used independently in milder climates.

2. Railroad Car Pullers. Car pullers are usually of either a capstan type or drum type. A capstan type puller is satisfactory for handling rail cars on level grade provided the pulling capacity is not exceeded. For higher pulling capabilities and locations where rails are not on level grade, the drum type puller should be used. In some cases a driven rail spotter vehicle is justified in lieu of the above. In making a choice, consider weight to be pulled, grade, radius of curvature (should be straight), track condition and operating temperature.

3. Railroad Car Scales. Railroad scales are optional for large plants if their use can be justified.

4. Unloading Hoppers. A double hopper arrangement, approximately 14 ft (4.27 m) wide and 28 ft (8.53 m) long should normally be provided. Bar grating protects against personnel and vehicles falling into the hopper. Hopper slope should be at least 60 degrees from horizontal. All hoppers, chutes and surfaces on which coal flows should be stainless steel for long life and good coal flow.

c) Truck Delivery. Transportation by truck is the most economical over short distances. The effective range is approximately 150 miles (242 km). Although it is the most flexible mode of transportation, it can also be highly dependent on the weather. Unloading equipment for truck delivery is similar to that required for rail delivery but is much less extensive. Truck scales are optional subject to economics and use justification. Truck hoppers are a minimum of 10 ft (3.05 m) by 10 ft (3.05 m) with steel grating and hinged or removable covers.

5.4.1.2 Coal Handling Equipment. Extensive equipment is required to transport coal from unloading hoppers to the furnace or storage area. Typical handling systems could include a combination of various elevators, crushers, and conveyors.

a) Coal Crushing Equipment. Crushers should be used in climates where the breaking up of sizable frozen lumps is required or where run-of-mine coal is used. Types of coal crushers commonly used in steam plants are single roll, double roll, or Bradford breaker (rotating cylinder type). The main drawback of belt feeders is the space required. A magnet should be installed upstream of the coal crusher to remove tramp iron from the coal. A screen and bypass should also be provided to bypass properly sized coal around the crusher. If the crusher is not to be provided, space should be provided for future installation.

b) Coal Feeders. Devices that deliver coal at a controlled rate from a storage area are called feeders. Different types of feeders are used for different applications in the plant. Simple belt feeders are used from the unloading hoppers to the crusher or lump breaker, or to other conveyors. Varying the speed of the driving roller controls the feed rate. The main drawback of feeders is the space required. A second type of belt feeder, using either a volumetric or gravimetric measuring system is used to measure the amount of coal entering the boiler or pulverizer. Multi-blade rotor type feeders are also used to provide a volumetric measurement of coal flow. Apron feeders can convey up inclines to 25 degrees and are rugged and long lived. These feeders, which are expensive and require more maintenance than belt feeders, should only be used when the service is too rugged for a belt feeder.

c) Bucket Elevators. Bucket elevators are used extensively for vertical lifting of coal. Those used most often today are the centrifugal-discharge and continuous-bucket types. Centrifugal discharge elevators are available to handle 5 to 60 tons (4 535 to 54 420 kg) of coal per hour. This type elevator has spaced buckets which receive part of their load of coal by scooping from the bottom of the elevator feed boot. The centrifugal elevator is generally more economical in the 40 to 50 ton (36 280 to 45 350 kg) per hour range because it has fewer buckets than the continuous discharge elevator and a loading leg, with its deeper pit, is not required. Continuous bucket elevators are available from 15 to 300 tons (13 605 to 272 100 kg) of coal per hour and can be installed either in a vertical or inclined position. The power requirements are approximately 10 percent less than required for a centrifugal discharge elevator because they are loaded by a loading leg rather than a scooping action. Continuous bucket elevators with double strand roller chains should be used above 50 tons (45 350 kg) of coal per hour.

d) Belt Conveyors. Inclined belt conveyors can be used in lieu of bucket elevators for vertical lifting of coal. Belt conveyors have unlimited possible combinations, low operating cost, low power requirements, are simple, quiet and reliable but normally require more space than required by an elevator. The maximum slope of a belt conveyor, which is a function of coal type and fines, is limited to 15 to 18 degrees for coal (27 degrees for wood chips). A roughed belt conveyor will convey approximately twice the capacity of a flat belt. When conveyors are routed across open spaces, galleries should be incorporated into the bridge structure. See Figures 16, 17, and Figure 18. Galleries will pay off in system reliability. They prevent ice

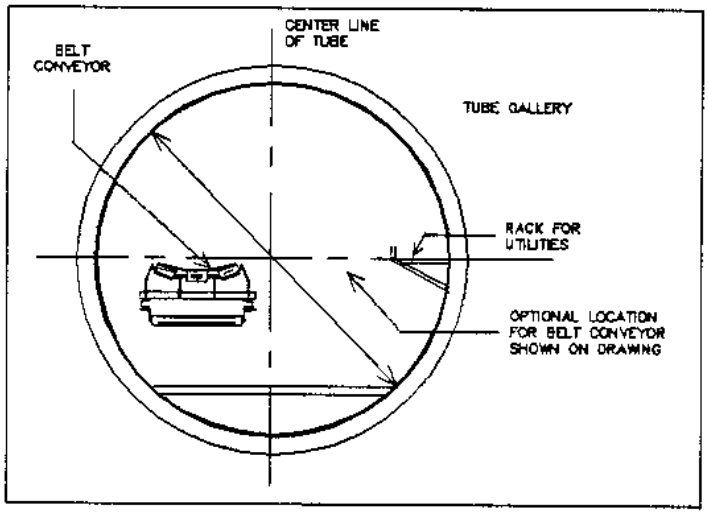

Figure 16
Section -- Gallery Detail

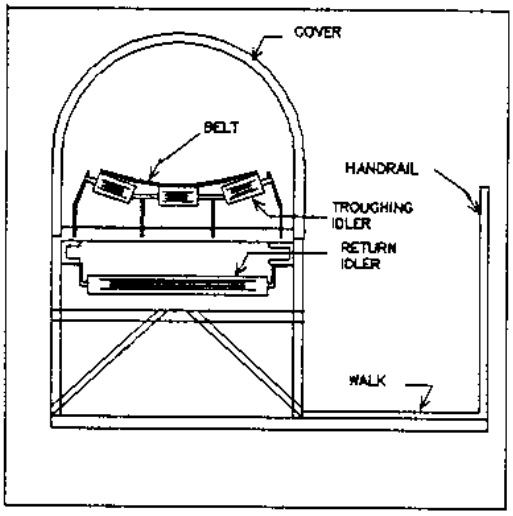

Figure 17
Conveyor Frame with
Weather Cover

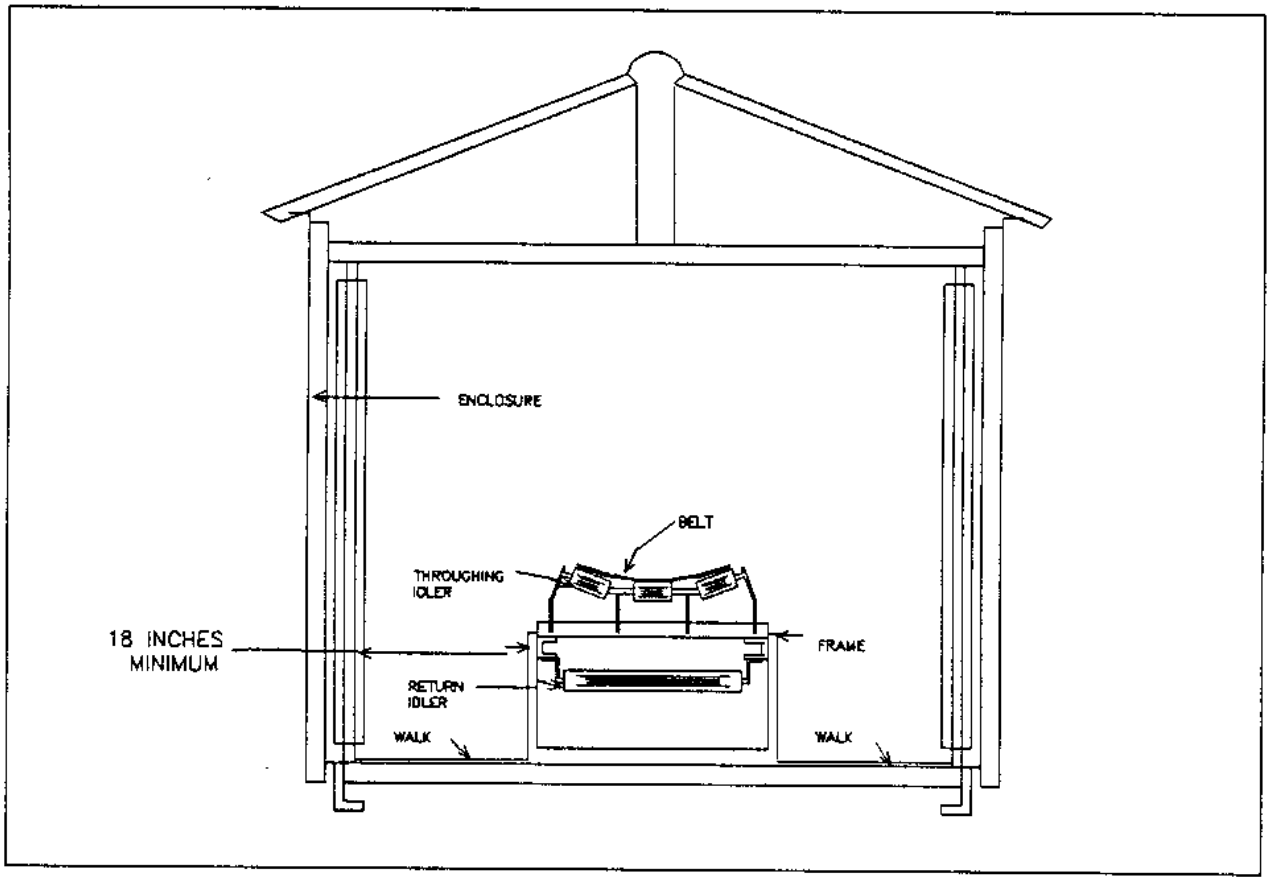

Figure 18
Double Walkway Gallery Type Frame

and wind from causing the belt to run off center and prevent wind from blowing an empty belt off its idlers. Galleries also decrease deterioration of the belt by the sun. Belt conveyors are usually used in lieu of elevators for system capacities over 100 tons (90 700 kg)/hour. A magnetic pulley or suspended magnet should be located upstream of equipment to be protected. Belt conveyors should be covered for dust control and personnel protection. Safety pull cords must be furnished to run along the length of each conveyor for quick shutoff of the conveyor. Backstops should be provided on an inclined conveyor to prevent reversal of belts on loss of power.

e) Flight Conveyors. Flight conveyors use chain-drive and spaced scrapers to push or drag coal along a trough. Poor operating and maintenance conditions have less effect on the flight conveyor than on the belt conveyor, but the flight conveyor uses much more power and is noisy. The maximum economic limit for double strand flight conveyors is approximately 100 tons (90 700 kg)/hour. Above this capacity and also where long conveyors are required, belt conveyors are more economical to operate.

f) Screw Conveyors. Simple and inexpensive, screw conveyors can be built into restricted spaces and can easily be made dust-tight. Screw conveyors are used for short runs or congested locations where little or no inclination is required. For this type of conveyor, coal must be relatively free of tramp iron, wood, and other foreign matter. Trough loading should not exceed 30 percent of the trough cross sectional area.

5.4.1.3 Coal Storage. Coal storage can be divided into two categories according to purpose: active storage, which directly supplies firing equipment, and reserve storage to guard against delays in delivery. Because the commercial value of coal decreases in storage, it is important that this reserve be kept to the minimum safe amount. The changes that may effect the value of coal are loss of heating value, size reduction, and possible loss due to spontaneous combustion. The decrease in heating value in weathered coal, which results from a loss of volatile matter and elemental carbon, can greatly effect the firing characteristics of the coal. The amount of this loss and extent of size reduction are highest near storage-pile surfaces and are greatest for low-ranking coals.

a) Spontaneous Combustion. Oxidation of coal begins as soon as freshly broken coal is exposed to the air producing carbon dioxide (CO_2), carbon monoxide (CO), water, and heat. There are several characteristics and conditions which affect the oxidation of coal. They are coal rank, size or surface area, temperature, amount of air exposure, chemical composition, size and amount of iron disulfide (pyrites), and moisture. Oxidation of coal takes place in five stages. The first stage is the initial absorption of oxygen. This is a slow process and continues until the temperature reaches about 120 degrees F (48.9 degrees C). The second stage is indicated by increasing absorption of oxygen resulting from the continued rising of temperature to 280 degrees F (138 degrees C). At this point the third stage begins which is marked by the water vapor and CO_2 being given off. This stage continues until

the oxidation becomes spontaneous. This occurs when temperatures reach 430 degrees F (221 degrees C) which is the beginning of the fourth stage. The last stage begins at 660 degrees F (349 degrees C) at which point the coal spontaneously ignites. The high rank coals are the easiest to store as they contain less oxygen and oxidize slower. The iron disulfides react with water and oxygen forming sulfuric acid, iron sulfate, and heat resulting in increasing oxidation rates and slacking. This is the reason the washed low-sulfur coals tend to have the best storage properties. It has been found that spontaneous combustion is much more likely with coals having greater than 1 percent sulfur, high ash content and low fusion temperatures. When these type coals are stored, provisions should be made to monitor the conditions within the stockpile. For those locations where excessive losses will result from the storage of poor quality coal, it may be justifiable to purchase a more stable higher rank coal from another location. Without oxygen, the oxidation process cannot take place; so it is important that the total coal surface exposure to air be as low as possible. Coal should be stored so that air cannot infiltrate or move through the storage pile. Spontaneous combustion usually results from careless storage procedures. Where coal is properly stored, this likelihood is remote.

b) Outside Storage. Where outside storage serves only as a reserve, normal practice is to take part of an incoming shipment and transfer it directly to live storage within the plant, and to divert the remainder to the outside pile. The reserve stockpile should be large enough to last a minimum of 30 days at peak steam demand. Whenever possible, additional coal should be stockpiled in preparation for interruptions in coal delivery (such as possible mine or freight strikes). The method of storing and reclaiming coal in an outside storage pile should be determined to satisfy regulatory environmental restraints. The pile should be on a concrete surface with an impervious barrier. Drainage and collection of rainwater runoff, and treatment or neutralization of effluent should be included in design. The storage pile should be built up in successive compacted layers no more than 2 ft (610 mm) thick. The top should be slightly crowned to prevent water from penetrating the pile. A surface layer of fines, which can be created by compacting with a bulldozer, will prevent oxidation of lower layers.

c) Inside Storage. The active coal stockpile is almost always retained in a covered structure such as a bunker or silo. Quite frequently, these structures are used for reserve storage as well. Although enclosed storage of reserve coal is more expensive than an outdoor pile, some of its advantages include minimized losses, good coal condition, and less labor-intensive handling.

1. Bunker Design. Bunkers should be sized for a minimum 30 hour supply at maximum boiler capacity. The interior surfaces of the bunkers must be kept clear of obstructions that would impede the flow of coal. Interior ladders should be at least 1 foot off the walls and discharge gates should be self cleaning. The vertical bunker walls should be lined with a corrosion resistant liner such as a resin with hardener and graphite

aggregate. The hoppers should be clad with 410 stainless steel on the cone section of the bunker. Parabolic suspension bunkers are not recommended because the flow of coal from all outlets is not uniform; this creates dead pockets and causes a spontaneous combustion hazard. Cylindrical bunkers are used to reduce danger of spontaneous ignition of coals containing over 1 percent sulfur. With this design, stagnation and coal segregation are minimized. At least the bottom of each bunker should be in the building to preclude bottom freezing. Discharge hoppers should be sloped at least 60 degrees. An emergency discharge chute or screw conveyor should be provided for each bunker to remove coal from the bunker in emergency situations.

2. Bunker Fires. Carbon dioxide protection should be considered for bunkers as required in para. 10.13. Provide detectors to sense gas mixtures caused by heating of the bunker. Mechanical coal handling equipment shall be provided to remove hot coal to the building exterior when it cannot be burned in the boiler within a reasonably short period.

3. Silos. Cylindrical silos can be used when coal sulfur content is less than one percent. These silos combine active and reserve storage in one structure. Their live storage capacity is less than that of a bunker and requires bucket elevators to utilize the entire storage volume. Common practice is to put live storage in the upper portion of the structure and reserves in the lower. When the live storage is full, coal spills over to reserve, which discharges to the pickup point of an elevator or conveyor. The silo bottom hoppers or cones should be sloped at least 60 degrees and lined with type 410 stainless steel (The slope of the cones depends on the coal available; the slope for western bituminous coal is 70 degrees). The outlet gates should be heated sufficiently to prevent freezing. Recirculating conveyor systems should be installed to recycle coal from bottom to top to deter spontaneous combustion should coal be retained in the silo for an extended period of time. Capacity should be 96 hours of coal storage for consumption at total plant capacity. Live bottom silos (without storage shelves) should be used where coal sulfur content is more than one percent.

5.4.2 Fuel Oil

5.4.2.1 Receiving and Storage

a) Storage and receiving of fuel oil is covered in NAVFAC DM-22, Petroleum Fuel Facilities, and NAVFAC MO-230, Maintenance Manual Petroleum Fuel Facilities. Minimum oil storage at plant must be equivalent to 120 hours operation at total plant capacity. Total activity storage must not be less than 30 days supply based on coldest 30 day requirement for primary or backup fuel. The preferred storage, is 30 days supply at plant capacity.

b) The complete oil unloading and storage facilities shall satisfy the pollution abatement requirements specified in EPA 38 CFR 237 Environmental Protection Agency, Oil Pollution Prevention, Non-Transportation Related Onshore and Offshore Facilities.

c) For rules and regulations, refer to NFPA no.31, Standard for the Installation of Oil Burning Equipment.

5.4.2.2 Oil Handling in Plant

a) Preheating and Recirculation. When a boiler plant is shut down, heavy oil will congeal in an oil burning system. Where cold start-up of the plant is required, provide a thermoelectric method to trace heat the system oil and piping. Provide pumps to circulate oil through electric heaters, piping, storage and return the heated oil to tank for mixing with tank oil at suction. For economic reasons, a steam or hot water oil heater should be installed in parallel with the electric heater for use at all times other than start-up. Fuel oil may be heated to pumping viscosity by a tank heater, tank suction heater in the suction line to the pump, or by a return line heater. Recirculation of oil back to the tank should be continuous to keep the formation of sludge in the oil tanks to a minimum.

b) Temperature. Oil in the suction line to the pump must be heated to the temperature corresponding to optimum pumping viscosity. Oil from the pump discharge must be heated to the temperature necessary for optimum atomizing viscosity which is defined by the burner manufacturer. If the pump suction is under negative pressure, avoid vapor locking by keeping the pump temperature below the oil flash point. Avoid temperature buildup of oil above the flash point in the oil tank. This buildup is due to oil at atomizing temperature (which is above flash point) being returned from the oil burners. Provide a high temperature bypass around the heater to the oil return to mix with hot oil returned from burners to limit oil temperatures in the tank.

5.4.2.3 Pumping. Base the pumping rate on the amount of return oil necessary to mix with tank oil to form a suction mixture at optimum pumping viscosity, plus the burning rate of all burners. Rate of oil return must be controlled to preclude overheating of the oil with its resultant pumping problems.

5.4.2.4 Blending. Blending (mixing) of fuel oils should not be attempted without establishing the compatibility of oils in question. Make sure proper research and testing is done before mixing, because oils of a different character, such as distillates or residuals, straight or cracked (thermally or catalytically) may react to cause heavy sludging and handling problems.

5.4.2.5 Oil Tank Heating. To avoid coking of oil in contact with the coils in the oil tank, the tank heating coils should not exceed 240 degrees F (115 degrees C). Circulation of HTW through coils is preferable to steam because of better control. If the oil pressure exceeds the steam or HTW pressure in the heating coils, use double-walled tubing in the coils to prevent contamination of steam or HTW with oil. Use steam or HTW in the inside tube, a thermal liquid between the inner and outer tubes, and oil on the outside of the outer tube. The thermal liquid should be at very low pressure and pressure sensitive alarm with sight glass provided to indicate leak of oil or steam into the thermal liquid.

5.4.2.6 Waste Oil. The use of waste oil as a supplementary fuel should be undertaken only with proper precautionary measures to ensure that the oil does not contain products that will damage equipment or generate pollutants that will be harmful to the environment.

5.4.3 Natural Gas

5.4.3.1 Applications. Furnish the equipment and piping called for in ANSI Z223.1, National Fuel Gas Code/NFPA 54. Consult with the gas transmission company to determine whether gas will be supplied on a continuous or interruptible basis.

5.4.3.2 Metering and Meter Locations. Gas meters shall be selected and located according to criteria in ANSI Z223.1/NFPA 54. The utility company should be consulted to determine whether it will provide the metering station with accessories, housing, connecting pipeline, and if the utility has specific piping requirements. In addition to the main plant meter, individual meters shall be provided for each boiler.

5.4.3.3 Pressures. Where the supplied gas pressure is too low for the required burner turn-down range, use a pressure blower (radial vane or paddle wheel type; refer to MIL-HDBK-1003/8, Exterior Distribution of Utility Steam, HTW, CHW, Natural Gas, and Compressed Air) to add to its rated pressure to obtain the proper burner pressure. Allow for pressure drops in piping and burner control valves in computing the pressure regulator valve setting.

5.4.3.4 Venting. Gas mains, burner headers, gas piping, etc., shall be vented according to the criteria in NFPA 85A, Prevention of Furnace Explosions Singe Burner Boiler-Furnaces and NFPA 85B, Prevention of Furnace Explosions in Gas Multi-Burner Boiler.

5.4.4 Wood. Wood products potentially available as fuel for generating steam in central heating plants are hogged, wood chips, sawdust and bark. Appropriate dust control measures shall be taken to prevent explosive mixtures of dust from being present in the plant. Handling and storage of sawdust pellets must be in accordance with ANSI/NFPA 664, Wood Processing and Woodworking Facilities.

5.4.4.1 Wood Delivery. Since wood burning is mainly confined to areas where it is locally available as a by-product or waste, most deliveries are by truck. Unloading wood from trailers can be accomplished with truck dumpers, which tilt the trailers and allow chips to fall into an unloading hopper.

5.4.4.2 Wood Handling Equipment. Belt conveyors with suitable fire protection should be used for transporting wood waste from storage to surge bins. These surge bins supply the distributors (mechanical or pneumatic) which feed the wood waste into the boilers. Surge and storage bins should all have counter-rotating screws on the bottom to minimize bridging of stored wood chips.

5.4.4.3 Wood Storage. Wood chips can be stored outdoors in piles and reclaimed as usage demands. For recommended practices for outdoor storage of wood chips see NFPA 46, Storage of Forest Products. Storage of wood chips generally should not exceed 1 year. In areas of deep snows and extreme cold, covered or indoor storage is desirable. Sawdust and bark should be stored indoors because they absorb moisture when stored outdoors. In large installations, 3 to 4 days storage in a prefabricated storage building with a traveling transverse reclaim screw should be considered. Maximum duration of chip storage with under-pile reclaim screw should not exceed 15 days. If reclaim is with mobile equipment, more storage of chips can be provided.

5.4.5 Solid Waste Handling. Unprepared refuse in quantities greater than 150 tons (136 050 kg)/day is handled most conveniently with a pit and crane system. The refuse is dumped from the refuse trucks into a storage pit where wet and dry material can be mixed by the crane operator. Crane speed and bucket (or grapple) size should be sufficient to permit the operator to mix the refuse in addition to feeding it to the incinerator hopper. Handling of prepared refuse is one of the key problem areas requiring further development. Because of the difficulty of removing all the abrasives from refuse, pneumatic handling systems deteriorate rapidly. Delivery of RDF to the incinerator-boiler on a full-scale, reliable basis is essential. Dual processing and conveying trains have not completely eliminated fuel bottlenecks in existing systems.

5.4.6 Ash Handling. The disposal of bottom-ash collected below the furnace and fly-ash collected from back-pass hoppers must be considered in plant design. Pneumatic, hydraulic, and mechanical conveying systems are used to transport ash from hoppers to a silo where it is collected for disposal. Dust control equipment must be provided to limit ash dust levels in occupied areas. Clinker grinders may be necessary to reduce the size of bottom ash in some cases. Special considerations such as smoldering embers or char, which may be present in ash from wood and solid waste fuels, must also be incorporated in design.

5.4.6.1 Pneumatic Systems. For plants over 50,000 pounds of steam per hour (6.30 kg/s), a negative pressure pneumatic handling system is usually used. This type of system will also include; a clinker grinder, a receiver-separator, an ash silo with vent filter, and an ash conditioner for dustless dumping of ash. Mechanical exhausters (blowers) or steam exhausters may be used to produce the vacuum which pulls ash from the dry ash hoppers. The steam exhauster requires approximately 2500 lbs of steam per hour (at 80 psig (552 kPa)) for a 6-inch (152.4 mm) piping system (8-inch (203.2 mm) systems require 3500 pounds).

5.4.6.2 Hydraulic Systems. Hydraulic bottom-ash systems are used on boilers of all sizes and are particularly useful in slagging type furnaces where removal of molten ash would otherwise be a problem. With this type of system, however, fly-ash must be handled separately by steam or mechanical exhausters. The hydraulic system uses either jet pumps or centrifugal pumps to transport an ash/water slurry from the wet ash hopper. A clinker grinder reduces ash size to ensure unhampered transport through the pipeline. De-watering tanks are then used to prepare ash for removal from the plant.

5.4.6.3 Mechanical Systems. For plants up to 50,000 lbs of steam per hour (6.3 kg/s), mechanical handling systems are sometimes used. These systems may include any combination of screw conveyors, flight conveyors, and scraper conveyors to transport ash from hoppers to the ash silo. Wet bottom-ash hoppers can also be emptied by mechanical systems.

5.4.6.4 Ash Silos. Provide ash silos with a minimum capacity of 72 hours at maximum boiler plant capacity. Although ash may set up in about three days and proper operation includes daily removal of ash, some plants may require 7 to 10 days storage because of 4-day weekends and problems with weather and ash disposal contractors. Size system for 2 times the ash rate. Use rotary ash conditioners for all heating plants. In areas of freezing climates, the rotary ash conditioner area should be enclosed and the equipment at the top of the silo should be protected with an enclosure. The ash storage silo shall be constructed of steel and be provided with explosion relief to conform with NFPA 68, Venting of Deflagrations.

5.4.6.5 Ash Disposal. Disposal of ash from the rotary conditioner should be considered at the time of design. Wood ash may be disposed of in local land fill areas or used as a fertilizer if not contaminated with oil fired soot. Coal ash may require disposal in a hazardous waste landfill area if not used commercially in cement of concrete block manufacturing.

Section 6: POLLUTION CONTROL EQUIPMENT AND SYSTEMS

6.1. Mechanical Cyclone Dust Collectors

6.1.1 Application. Multiple tube cyclone collectors are used to collect particulate matter emissions from industrial boilers. They are used as follows:

a) On boilers in low capacity installations where particulate removal requirements of state and local codes can be met,

b) Protect a fabric filter from fire damage by eliminating glowing char from the gas stream

c) Act as a prefilter ahead of a wet scrubber or an electrostatic precipitator to remove large particles inexpensively.

Some pollution control equipment designs do not require upstream mechanical collectors. Mechanical collectors are the minimum degree of particulate removal required upstream of an induced draft fan.

6.1.2 Construction. The collector is composed of a number of fixed vane cyclone tubes, generally 6 to 9 inches (152.4 to 228.6 mm) in diameter; the tubes are arranged in a tube sheet within a housing having common inlet, outlet and dust storage hoppers. Valley angle of hopper should be a minimum of 55 degrees. An access door and poke hole (2-inch coupling with pipe plug) are required per hopper.

6.1.3 Performance. This type collector can remove particles of 10 microns and larger at efficiencies up to 92 percent. Because efficiency varies with the flue gas velocity, collection efficiency between 60 and 80 percent is common. Changes in operating conditions such as load swings (with effects on gas volume, temperature and density) and changes in fuel size and ash composition (with effects on particulate loading and dust characteristics) can adversely affect performance.

The vortex in each cyclone tube separates solid particulate matter such as dust or fly ash from the gas stream. The centrifugal force of the vortex action causes the particulate to impact the tube wall and fall by gravity into the hopper. The cleaned gas is discharged into an outlet plenum duct. The separating operation is carried out without moving parts and therefore requires only periodic inspection and repair. Sectionalizing the mechanical collector and the inlet duct can maintain peak efficiencies at predetermined load levels but corrosion problems can result in the unused sections under the soot deposits.

6.1.4 Design Requirements. Size hopper(s) for an 8-hour collection period at full load. Ash must never be allowed to fill hoppers up to the cyclone tubes. High ash level will cause particulate bypass, erosion and clogging of tubes. When firing wood chips or bark, hoppers must have ash removed as fast as it is collected to prevent clinkers and heat damage from

accumulated ash. When firing lignite, hoppers must be cleaned continuously or emptied within 4 hours to prevent heat damage. The inlet of the mechanical cyclones should be installed so that the gas flow is relatively uniform; if not, straightening vanes must be installed upstream of the collector. Ductwork (breaching) must have gradual size transformations up-stream of the collector to prevent turbulence in the duct and reduced collector performance. Design shall be based on predicted flue gas temperature leaving the boiler or economizer plus 25 degrees F (13.8 degrees C). Pressure drop will vary according to boiler flue gas flow but will generally be from 2 to 3 inches of water (0.5 to 0.75 kPa). Table 15 shows the particle size distribution for a high sulfur coal with an ash content of approximately 12 percent. It can be seen that 90 percent collection of particle sizes in the 10.0-15.0 micron range will provide an overall collection efficiency of 60-70 percent.

Particle size distribution and the quantity of flyash will vary according to fuel characteristics and the type of combustion process being used.

Table 15
Typical Flyash Analysis for a Spreader Stoker
Bahco Size Distribution

Particle Size Range Microns	Average Particle Size Microns	Percent in Gas Stream
0- 7.5	3.75	28.0
7.5-10.0	8.75	5.0
10.0-15.0	12.5	7.0
15.0-20.0	17.5	5.0
20.0-30.0	25.0	8.0
30.0-40.0	35.0	6.0
40.0-60.0	50.0	7.5
60.0+	60.0+	33.5

6.1.5 Accessories. Collectors shall be equipped with means of periodically, and preferably automatically, removing collected ash and cinders. Accessory equipment generally to be included in an installation are hopper bottom vibrators, rotary air seal feeders on hopper outlet, conveyor, expansion joints at conveyor, high level alarm, a local control panel to operate the discharge equipment, hopper dust level indicator, hopper heater, insulation and pressure gauge. Provide a water wash system when burning oil, high sulfur fuels, or other corrosive fuels, in order to remove corrosive residual ash when the unit is out of service. Provide inspection doors at the inlet and outlet ducts of the collector.

6.2 Fabric Filter Dust Collectors

6.2.1 Application. Fabric filter dust collectors (baghouses) are becoming increasingly popular because of their compatibility with acid gas scrubbers. The addition of an acid gas scrubber upstream of a baghouse allows the unit to be used with virtually any type of combustion process because the scrubber removes all burning flyash particles.

Fabric filters cannot be used downstream from a wet scrubber, or anytime the emissions are damp, because moisture will blind (clog) the filters.

If an acid gas scrubber is not required, the possibility of burning flyash carryover (or unburned fuel that may blind or smolder on the surface of the bag) must be considered.

6.2.2 Advantages. The major advantages of fabric filter dust collectors over electrostatic precipitators are: lower initial cost, modular construction (permits on-line maintenance), no high voltage requirements, simplicity, wide economical capacity range, and a high collection efficiency (99 percent plus) that is not appreciably affected by such variables as inlet grain loading, particle size distribution, turndown, or fuel constituents.

6.2.3 Disadvantages. The fabric filter is sensitive to flue gas temperature and the flue gas temperature must be controlled for maximum bag life and preventing bag blinding (clogging). Operation with flue gas temperatures below the dew point will blind the baghouse filters within a short operating period and shorten fabric filter life. Operation above the temperature limits of the fabric filter will result in fabric failure. See para. 6.2.9, for minimum requirements to prevent temperatures below the dew point and those temperatures above the specified limit from entering the baghouse.

The 2.0-5.0 inch water gauge (in. w.g.) (0.25 to 1.25 kPa) pressure drop across a baghouse is high compared to the typical 0.5-1.0 in. w.g. pressure drop across an electrostatic precipitator. This puts a higher stress on the ducting between the baghouse outlet and the induced draft fan. The horsepower requirements of the fan are much higher and add to the annual operating cost of the unit.

6.2.4 Types

6.2.4.1 Reverse Air Collector. This type fabric filter is sometimes called the inside bag collector type because the fly ash is collected on the inside of the fabric filter bag. The casing is divided into two parts by a tube sheet with the upper or clean air side containing the fabric filter bags. The fly ash hopper is located beneath the tube sheet. This type fabric filter collector is cleaned by reversing the gas flow through the fabric using clean flue gas.

6.2.4.2 Pulse Jet Collector. This type is also called the outside bag collector since the fly ash is collected on the outside of the fabric filter bag. The tube sheet is in the upper part of the casing and the fabric filter bags extend down into the dirty side of the casing. The bags are supported by a wire cage which prevents the bag from collapsing under flow conditions. This type fabric filter collector is cleaned by pulses of compressed air injected down inside and through the fabric filter bags. Cleaning may be done off-line by isolating modules or on-line.

6.2.5 General. To properly apply their equipment, the fabric filter collector manufacturer must know the expected inlet gas conditions over the range of inlet conditions. For applications which are operationally sensitive at reduced load, i.e., stokers and incinerators, upset partial load conditions should also be included. This information can best be supplied by the boiler or incinerator manufacturer; compensation must be made for the effects on any system components between the boiler or incinerator outlets and the fabric filter collector inlet.

In determining the inlet gas conditions for existing installations, source testing should be performed to determine the gas flow and contents. Gas volume determination should be made using a Pitot tube in accordance with IGCI Bulletin 101, Test Procedures. This publication incorporates ASME PTC 27, Dust Separating Apparatus. For particulate loading, an actual sample should be taken and analyzed in accordance with ASME PTC 28, Determining the Properties of Fine Particulate Matter.

For new installations, the inlet gas conditions should be obtained from the manufacturer. If inlet gas conditions are not available, the inlet and outlet gas contents must be estimated. When estimates are made, the emission factors and handbook data should be taken from EPA AP-42, Compilation of Air Pollutant Emission Factors.

Source testing should be conducted in accordance with the applicable portion of EPA 40 CFR 60, Appendix A, Reference Methods.

6.2.6 Reverse Air Collector

6.2.6.1 General. This type of cleaning action is much gentler than pulse jet cleaning. The collector operates at a lower air to cloth ratio than pulse jet collectors which results in a higher initial cost. The filter fabric usually lasts 2 to 3 times longer in the reverse air unit. The reverse air collector is commonly used for larger flue gas systems. For flue gas flows from 50,000 ACFM up to 100,000 ACFM, a life cycle cost analysis should be made to determine the proper selection. For flue gas flows above 100,000 ACFM, the reverse air collector is the preferred type.

6.2.6.2 Design Criteria. For a conservatively sized reverse air fabric filter fly ash dust collector the design gas flow must be carefully selected for the actual expected operating conditions.

Additional allowances for excess air should be used above those given by boiler manufacturers for predicted performance data. Expected operating conditions must be explicitly defined and equipment systems must be designed to meet all operating modes. The following design parameters can be used as a guide:

a) Collector should be a compartmental design with sufficient compartments so that construction and performance criteria are met with one compartment cleaning and one off-line for maintenance.

b) Maximum gross air-to-cloth ratio to be 2.0 to 2.5 ACFM/square feet of filter area.

c) Maximum net air-to-cloth ratios with one module off-line for cleaning and reverse air fan cleaning should be 2.5 to 3.0 ACFM/square feet of filter area.

d) Minimum reverse air flow to be 1.50 ACFM/square feet of filter area in a module.

e) Bags are usually of woven fabric with a maximum bag length to diameter ratio of 38 to 1 and an adequate number of anti-collapse rings sewn into the fabric.

f) Maximum total baghouse pressure drop from inlet flange to outlet flange with one module cleaning to be 6 in. w.g.

g) Hoppers should be designed with adequately sloped side walls for the fly ash characteristics to be encountered. Minimum slope of the valley should be 55 degrees. Hoppers should have poke holes, strike plates, hopper vibrators and high ash level indicators. Hopper capacity should be 8 to 10 hours using one-third of the hopper volume.

h) Provide access to all working and maintenance areas with a protective penthouse to allow for bag maintenance.

i) Design inlet and outlet ductwork plenums for equal gas distribution to all modules.

j) Flue gas temperature must be controlled at a minimum 25 degrees F (13.9 degrees C) above the dew point and below the maximum temperature limits of the fabric filter for the expected load range of the boiler.

k) The collector housing, hoppers, inlet and outlet plenums, and reverse air plenum should all be insulated. A minimum gas flow should be maintained through the reverse air fan and plenum even when not in a cleaning cycle. This will avoid fan or duct corrosion due to the temperature of residual flue gases dropping below their dewpoint. Provide walking surfaces to all maintenance and access locations. Insulate probes, pressure taps, and any other sources of heat sink that may cause localized cooling and corrosion of the internal walls.

l) Hopper heaters or other supplemental heat should be considered in colder climates or on systems that frequently cycle on-line and off-line. Bag life is considerably reduced on systems that frequently pass through the acid and/or moisture dew points. Heaters should maintain internal hopper skin temperature at 200 degrees F (93.3 degrees C).

m) Adequate means of maintaining bag tension must be provided.

n) Controls and instrumentation at a minimum should provide for: differential pressure indication across entire baghouse and each individual module, individual module isolation, automatic and manual cleaning capability based on pressure drop across the collector on timed cycle, emergency bypass capability for high pressure differential, low and high temperature conditions, low oxygen conditions.

o) Collector manufacturer should furnish his field representative to assist the Contractor in the installation and startup of the collector and to train the Government's operating personnel.

p) Proper startup and shutdown procedures must be specified and followed. The shutdown procedure must provide for maximum removal of residual ash and flue gas (by repetitive cleaning cycles and fresh air purging). Residual ash and oxides of sulfur and nitrogen form acids which will cause corrosion in an off-line unit, especially if the unit is unheated and subject to temperature swings through the moisture dewpoint.

6.2.6.3 Performance. The reverse air collector is capable of meeting all existing particulate emission standards.

A properly designed collector can meet the New Source Performance Standard (NSPS) of 0.05 lb/million Btu input (0.021 kg/kJ). Some guarantees are now being given of 0.03 lb/million Btu input (0.013 kg/kJ). However, the design shall conform to requirements set out in the construction permit for the particular site. Conduct source emissions tests at design conditions in accordance with EPA 40 CFR Part 60, Appendix A.

The stack emission or efficiency requirement must comply with weight emission standards, opacity regulations, or community standards for visible emissions. Compliance with existing emission codes may not satisfy the opacity regulation. Similarly, opacity regulations may not be as demanding as community standards. A specific quantitative emission rate must be selected on the basis of the goals established.

Stack opacity is influenced by particle size and quantity. For example, with pulverized coal-fired boilers, about 45 percent of the ash particles are below 10 microns in size; for a stoker-fired boiler, about 25 percent are below 10 microns. A visually acceptable stack for these two options might require residuals of 0.02 grains per dry standard cubic feet (gr/dscf) and 0.04 gr/dscf, respectively.

6.2.6.4 Construction. The casing including tube-sheet, hoppers, and ducts should be of a minimum 7 gage ASTM A36 steel designed to withstand the maximum static conditions of the draft system at the maximum temperature limits of the fabric filter. It is not uncommon to see these conditions set at plus or minus 20 in. w.g. at 550 degrees F (287.5 degrees C). The module outlet dampers and reverse air dampers must be of zero leakage design. Properly fabricated poppet dampers have proven satisfactory for this service and are commonly used.

6.2.7 Pulse Jet Collector

6.2.7.1 Design Conditions. A pulse jet collector uses dry high pressure compressed air from 80 to 100 psig (552 to 690 kPa) depending on the fabric filter supplier's recommendation as a cleaning medium to back-pulse the bags. To assist in cleaning, the tops of the bags are usually provided with a venturi which inducts secondary air into the bag. High quality solenoid valves are required in the compressed air lines as pulse times are usually measured in fractions of a second.

For fly ash collection applications, off-line cleaning with module isolation is preferred by most to extend fabric filter life and some manufacturers prefer to omit the venturi. Both woven and felted fabric may be used. Felted fabric has shown a longer life but with a higher cost. With the higher air-to-cloth ratios this collector will probably require less space than a reverse air collector. The pulse jet collector is a more simply designed unit with fewer moving parts and a much less complicated control system than the reverse air collector.

6.2.7.2 Design Criteria. The following criteria can be used as a guide for off-line cleaning pulse jet collectors.

a) Collector should be a compartmental design with sufficient compartments so that construction and performance criteria are met with one compartment cleaning and one off-line for maintenance.

b) Maximum gross air to cloth ratio to be 3.5 to 4.5 actual cubic feet per minute per square foot of filter area.

c) Maximum net air-to-cloth ratio with one or more modules off-line for cleaning and or service to be not more than 5.0 actual cubic feet per minute per square foot (1.524 m) of filter area.

d) The above air-to-cloth ratios are for woven fabric. Some felted fabric manufacturers may consider slightly higher ratios.

e) Maximum total baghouse pressure drop from inlet flange to outlet flange with one module cleaning should be 8 in. w.g.

f) Bags are nominally 5 to 6 inches (0.127 to 0.157 m) in diameter and 10 to 12 ft (3.04 to 3.66 m) long.

g) Space cage wire according to fabric filter supplier's recommendations.

h) Woven glass or felted glass fabric can be used. An economic analysis should be performed based on initial cost and expected bag life.

i) The design criteria comments for the reverse air collector hoppers, access, inlet and outlet plenums, flue gas temperature control, hopper heaters, insulation, controls, instrumentation, maintenance, and manufacturer's field representatives apply to the pulse jet collector.

6.2.7.3 Performance. The pulse jet collector has demonstrated performance equal to that of the reverse air collector; the same comments apply to both.

6.2.7.4 Construction. The casing design requirements are the same as for the reverse air collector. The module outlets are commonly provided with low leakage butterfly type dampers in lieu of the poppet dampers. A walkway should be provided in the plenum above the tube sheet of sufficient height to allow for bag replacement.

6.2.8 Fabric Filter Media Types

6.2.8.1 Woven Glass. Woven fiberglass bags have established a good operating record for continuous operation up to 500 degrees F (260 degrees C) with surges to 550 degrees F (287.5 degrees C). These bags are coated with a finish to provide increased chemical resistance to acid attack and improve abrasion resistance between glass fibers for longer life. The designer shall carefully evaluate temperature limitations, abrasive characteristics, and chemical resistance as all affect maintenance and operational costs.

6.2.8.2 Felted Glass. At the present time there is one major manufacturer of this fabric. Early experience was promising. However, the cost of this fabric is high, and some bonding problems with the felted material have occurred. This fabric has the same temperature limitations as the woven glass bags. This fabric is fairly stiff and is only used on pulse jet applications.

6.2.8.3 Teflon. Teflon fabric is also quite expensive and shrinkage problems have been experienced at temperatures at approximately 400 degrees F (205 degrees C).

6.2.8.4 Other Fabric Filter Media. Other media types such as Nomex and Acrylic are not suitable for fly ash applications due to the temperature limitations of the fabric. Nomex is rated for 400 degrees F but deteriorates in the presence of sulfur dioxide. Current filter technology should be investigated with each project to make the best possible selection.

6.2.9 Flue Gas Temperature Control. Automatic flue gas temperature control with the sensing elements located at the baghouse inlet should be provided to prevent flue gas temperatures from dropping below the dew point. To elevate the flue gas temperature entering the baghouse to an acceptable level, two methods are discussed in para. 6.2.9.1 and para. 6.2.9.2.

6.2.9.1 Flue Gas Bypass Duct. A flue gas bypass duct can be provided around the economizer which is automatically controlled. The bypass duct around the economizer should be sized for approximately one-third of the maximum flue gas flow with the flue gas pressure drop equal to that of the economizer. This method is capable of handling fairly low boiler turndown conditions.

6.2.9.2 Water Bypass System. An automatic water bypass system can be used to bypass water around the economizer to prevent the flue gas leaving the economizer from dropping below its predetermined limit. This method has potential problems at low loads. There is a possibility of steaming conditions developing at low water flows through the economizer which can cause water hammer damages, thus forcing the boiler out of operation. To protect against a control system failure, an alarm should be provided to indicate flue gas temperature drop below a preset value. This will allow time for the operator to switch to manual operation prior to the flue gas temperature dropping below the acid dew point.

6.2.9.3 Fabric Filter (Baghouse) Bypass. To prevent damage to fabric filter bags from excessively high flue gas temperatures or low temperature moist flue gas at start-up or shut down of boilers, an automatic flue gas bypass system should be installed. Local environmental regulations may require a waiver to permit this necessary feature. Dampers are to be rated for minimum of 550 degrees F (287.5 degrees C) and shall be of the positive seal type. Dampers are actuated by a signal from the temperature probe sensing high or low temperature of air entering the baghouse. Dampers can also be actuated by an oxygen probe sensing low oxygen in flue gas entering the baghouse as additional protection to prevent combustible gases from passing through the baghouse. Baghouse should be bypassed under oil firing conditions.

Bypass duct around the baghouse shall be sized such that the flue gas pressure drop through the bypass approximately equals the pressure drop through baghouse under normal operating conditions.

Bypass dampers shall be of the zero leakage multilouver isolation type (i.e. two sets of dampers with sealed air space within) or zero leakage poppet type.

6.3 Electrostatic Precipitators

6.3.1 Applications

6.3.1.1 Coal-fired Boilers. Flyash collection from coal-fired boilers has been the most common use of electrostatic precipitators. However, these units are not as well suited to upstream acid gas (HCl, SO_X, NO_X, and toxics) treatment systems as are baghouses. For this reason, baghouse/scrubber combinations are becoming the preferred method in order to comply with increasingly stringent air emissions requirements.

6.3.1.2 Solid Waste Boilers. Electrostatic precipitators are suitable particulate control devices for solid waste incinerators if acid gas control is not required. Precipitators are better at withstanding the temperature excursions typical of solid waste combustion, as well as carryover of burning embers.

6.3.2 Advantages. The major advantages of the electrostatic precipitator are normally smaller physical size than fabric filters, a wide range of temperature applications and ability to tolerate temperature excursions outside the normal operating range, low pressure drop with resulting low energy consumption, and dry continuous disposal of collected dust. A properly designed and operated precipitator can perform in a reasonably high collection efficiency range (refer to Figure 20).

6.3.3 Limitations. Electrostatic precipitators are normally more process sensitive than fabric filters and require tighter control of boiler and collector operating conditions and fuel selection. Low sulfur coal, selected for reduced sulfur dioxide emissions, normally produces a high resistivity ash. The electrical charge retention ability of high resistivity ash makes it difficult to remove from the collecting plates, thereby causing excessive ash buildup and electrical arcing. This results in erratic currents and reduced power to the fields which in turn reduces the collecting ability of the unit. Figure 19 shows the relationship of sulfur content to ash resistivity. Unburned carbon in the flyash will reduce resistivity but is an operational problem. Initial cost is usually higher for an electrostatic precipitator versus a fabric filter of the same design performance.

6.3.4 Weighted Wire Type. The term weighted wire type comes from the design of the discharge electrodes. The discharge electrodes, which in this case are wires, are given the appropriate tension by means of a mass which is suspended at the bottom of each wire.

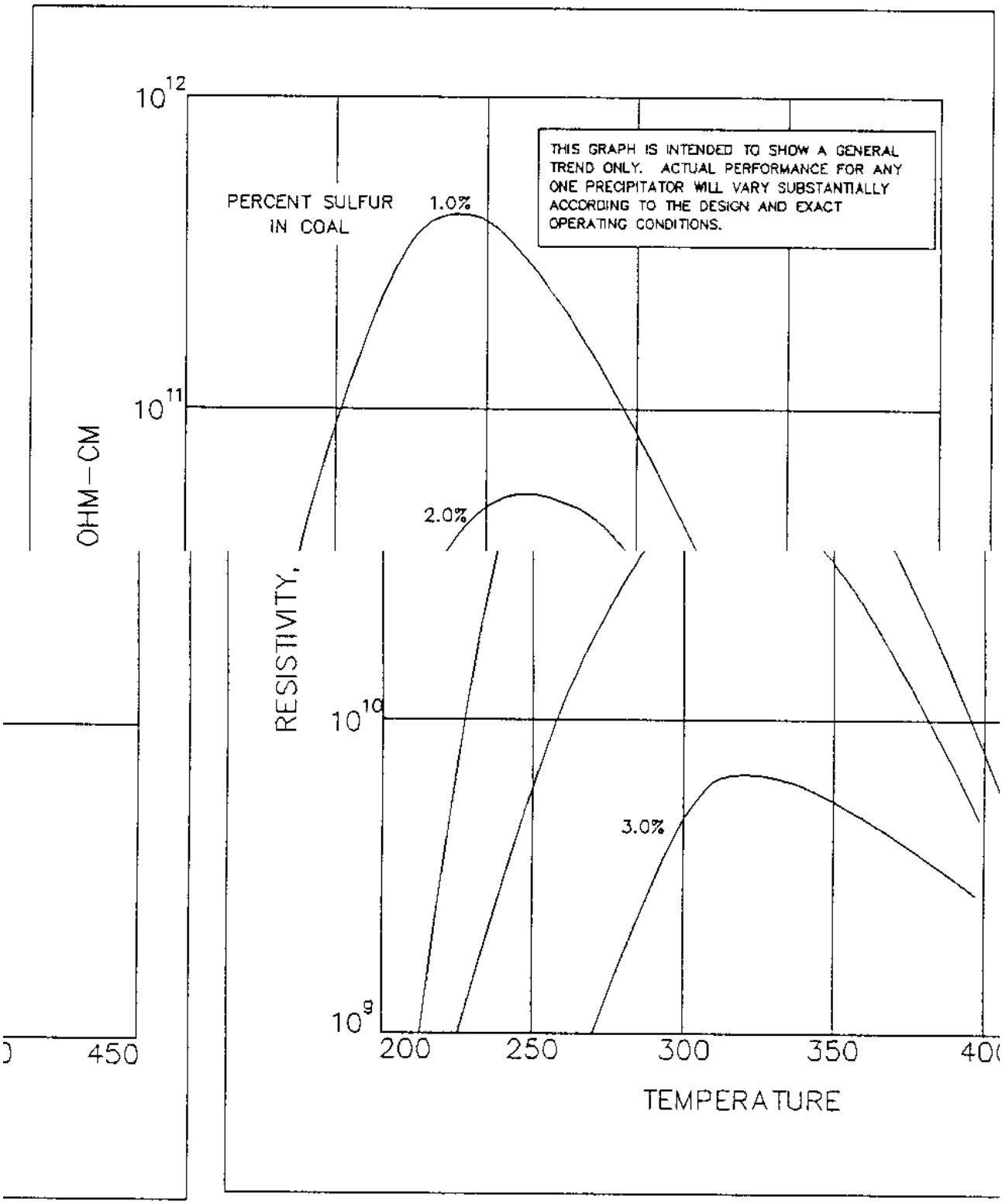

Figure 19
Ash Resistivity as a Function of Temperature

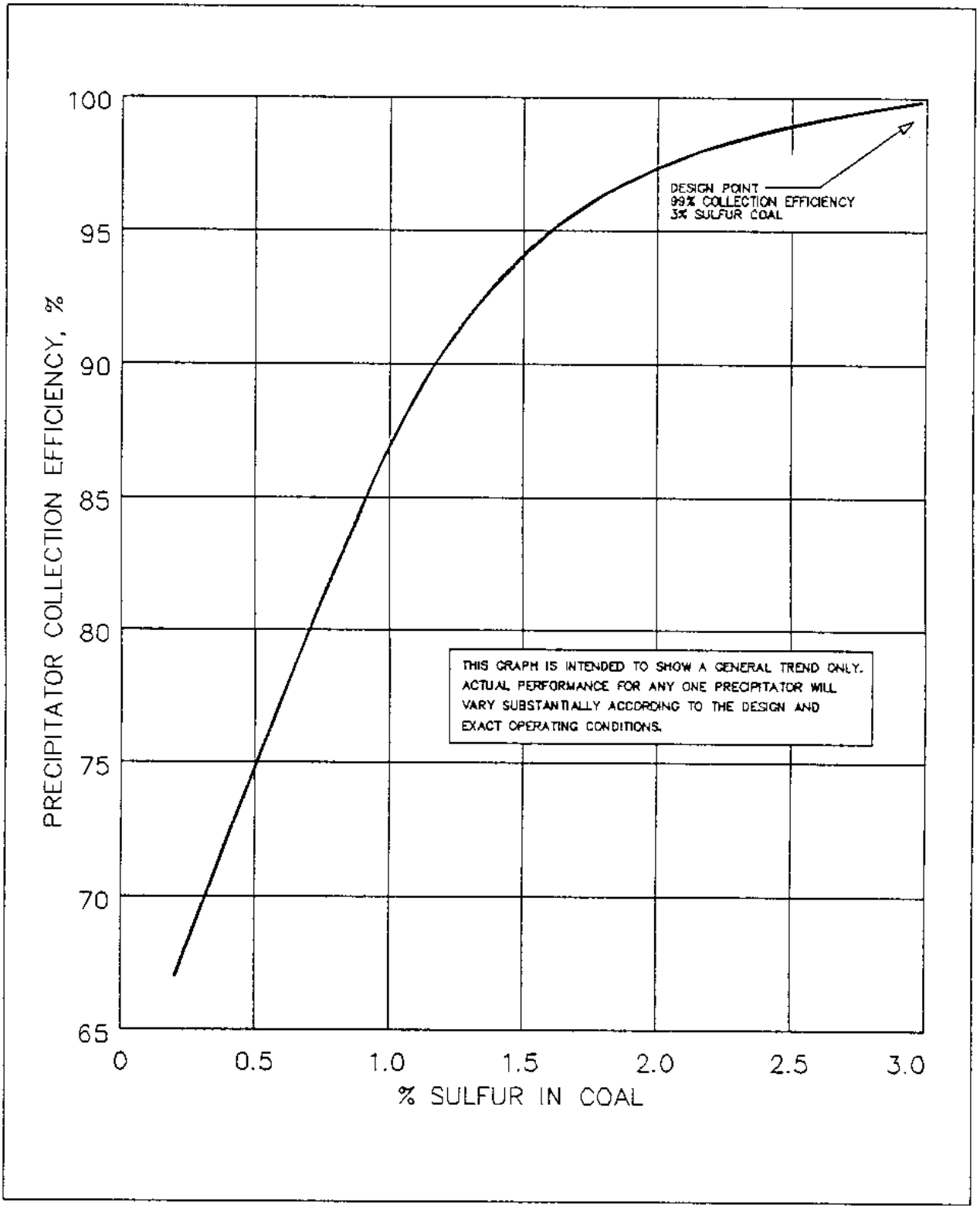

Figure 20
Electrostatic Precipitator Performance

6.3.5 Rigid Frame Type. In this type of electrostatic precipitator the discharge electrodes are not tensioned by weights, but are rigidly supported by attachment to a discharge electrode frame. In some cases, the use of wires is completely eliminated by substituting sharply pointed structural members in the discharge electrode frame. This design has been in common use outside the United States and is sometimes referred to as the European design. It is now coming into use in the United States as an alternative to the weighted wire design.

6.3.6 Flow Considerations. The inlet and outlet duct of the precipitator should provide for uniform flow with the flow evenly distributed across the precipitator. The use of turning vanes and/or distribution plates is often necessary to reduce turbulence. To reduce the risk of uneven flow in the design, model studies are sometimes advisable. The additional cost of the model study may be advisable in some cases which involve unique designs or unusually abrupt changes in flow direction near the precipitator and under such conditions, the designer considers the risk of the uncertainty to be unacceptable.

6.3.7 Electrical Sectionalization. The number of chambers, fields, power supplies per field, and bus sections per field must be determined based on reliability, efficiency, and process requirements. Sectionalization, which is the number of power supplies per installation, produces improved performance, reliability and maintenance flexibility by using several smaller power supplies in lieu of fewer large power supplies.

6.3.8 Hoppers. For ash handling facilities, consider the number and types of hoppers, hopper material, hopper slope or wall angle, and ash conveying system. Adequate access to all compartments, chambers, hoppers, ducts, and between the fields should be provided for maintenance. These access openings must be provided with a positive means of preventing entry while the high voltage electrodes, which are inside, are energized.

6.3.9 Rapper Systems. It is necessary to rap or vibrate the discharge and collection electrodes to remove collected ash. It is important that this system be capable of creating sufficient acceleration forces at the electrode surface where the ash collects to dislodge the accumulated material. The transmission of these forces from the rapper or vibrator to the electrodes is just as important as the rapper or vibrator itself. To assure adequate cleaning action and to minimize re-entrainment of ash into the gas stream, the electrode area served by each rapper or vibrator should be minimized. Rapping and vibrating controls should be adjustable for duration, frequency, and intensity and should prevent operation of more than one rapper or vibrator at a time.

6.3.10 Process Variables. The electrostatic precipitator must be matched to the process using the common design parameters of gas flow, temperature, and pressure, as well as the fuel (coal) analysis and resulting ash chemistry, dust concentration, particle size distribution, moisture content and flow distribution. Consideration should be given to the future variability of the fuel supply. Figure 20 demonstrates how the performance of a precipitator designed for 99 percent collection efficiency is reduced when coal with a low sulfur content is substituted for the specified fuel.

6.3.11 Design Parameters. In the design of electrostatic precipitators several parameters come into use in evaluating and comparing different designs and configurations. The most common parameters include:

a) Collection Efficiency -- The weight of the particulate collected per unit time divided by the weight of the particulate entering the precipitator during the same unit time expressed as a percentage.

b) Specific Collection Area (SCA) -- The ratio of the total collecting surface area in square feet to the gas flow rate expressed in thousands of actual cubic feet per minute. Generally, the larger the SCA the better the collection efficiency. The typical range is 350 to 450 square feet (32.5 to 41.8 square meters) per acfm (0.0283 cubic meters).

c) Electrode Area per Rapper -- The collection area, expressed as square foot or square meter, rapped by each rapper. Generally, the smaller the electrode area per rapper, the better the collection efficiency.

d) Corona Power Density -- The ratio of the total power input in watts to the total gas flow rate in thousands of actual cubic feet per minute. Generally, the higher the corona power density the better the collection efficiency. Typical power densities are 1 to 2 watts per square foot.

e) Aspect Ratio -- The ratio of total length to the height of collector surface. Generally, the higher the aspect ratio, the better the collection efficiency. Typical aspect ratios are 1.0 to 1.5.

f) Treatment Time or Residence Time -- This parameter reflects the theoretical time a particle is exposed to the electric field within the precipitator. It is the ratio of effective length of the collector surface in the direction of gas flow expressed in ft to the velocity of the gas flow in ft/sec. Generally, the longer the treatment time the better the collection efficiency. Typical gas velocities are 4 to 6 ft/sec (1.22 to 1.83 m/sec) with treatment times of 8 to 12 seconds.

6.4 Scrubbers

6.4.1 Application. Scrubbers are used to remove acid gases such as SO_2 and HCl from flue gas streams. Scrubbers have an added benefit of removing some NO_x, but they are not applied specifically for NO_x control. Dry flue gas desulfurization (FGD) is applicable for controlling SO_2 when the required removal rate does not exceed 85 percent efficiency. Wet scrubbers are used when the S_2 inlet loading is high, or when the required collection efficiency exceeds 85 percent.

6.4.2 Dry Scrubbers. Dry scrubbers using spray dryer absorbers for removal of sulfur dioxide are illustrated in Figure 21. A finely atomized alkaline slurry is sprayed into the reaction chamber. Sulfur dioxide is absorbed as the atomized slurry vaporizes in the hot flue gas stream. The dry reaction products become entrained in the flue gas stream and either fall into the scrubber hopper or are passed on to the baghouse. Additional SO_2 removal occurs on the surface of the bags from the carryover of residual alkaline. The advantages of dry scrubbing are a reduction of water usage, flue gas reheat requirements, and overall corrosion. Sulfur compounds collected from the flue gas are discharged from the scrubber in a dry state, and these compounds are more stable than the products of wet scrubbers. Therefore, the problem of leaching at the landfill site (if used) will be less when using dry flue gas desulfurization.

6.4.3 Wet Scrubbers. Wet scrubbers used for flue gas desulfurization (FGD) utilize a slurry or solution of materials such as limestone, lime, sodium hydroxide, or sodium carbonate to react with the sulfur oxides in the flue gas. Wet scrubbers are designed to provide intimate contact between the gases and the scrubbing liquid. Particulate removal of a wet scrubber is usually limited. Wet scrubbers may be spray towers, packed towers or plate towers. Reagent cost is high for the sodium systems so that the systems are seldom used. Calcium-based scrubbers are generally used because they use lower cost reagents; the reaction between the sulfur oxides and lime produces calcium sulfite or calcium sulfate (gypsum) which are of limited solubility, and plugging of equipment can become a problem. Calcium sulfite salts from these scrubbers form a sludge which may be difficult to stabilize. Sludge stabilization ponds may be required for some processes, and land area requirements may be excessive.

6.4.3.1 Dual Alkali Scrubber. The dual alkali scrubber is a type of wet scrubber which offers solutions to some of the problems mentioned above. Sodium salts are recirculated through the scrubber taking advantage of high solubility and fast reaction rate. The spent sodium-based scrubbing liquor is then pumped to chemical reaction tanks where it is reacted with lime to precipitate insoluble calcium sulfate salts, returning soluble sodium salts to the scrubbing process. The process has a higher capital cost than calcium scrubbing, but generally a lower operating cost. Operating complexity and power consumption are increased, however the calcium sulfate salts can be de-watered more easily. A vacuum filter is often used to de-water the sludge prior to disposal. In the double alkali FGD system illustrated in Figure 22, absorption of sulfur dioxide and waste generation are separated. This is advantageous because there are minimal suspended solids in the absorbent to contribute to scaling of the scrubber internals and the high concentration of alkali enhances liquid phase mass transfer. This system, therefore, achieves high sulfur dioxide removal efficiency at low liquid-to-gas ratios.

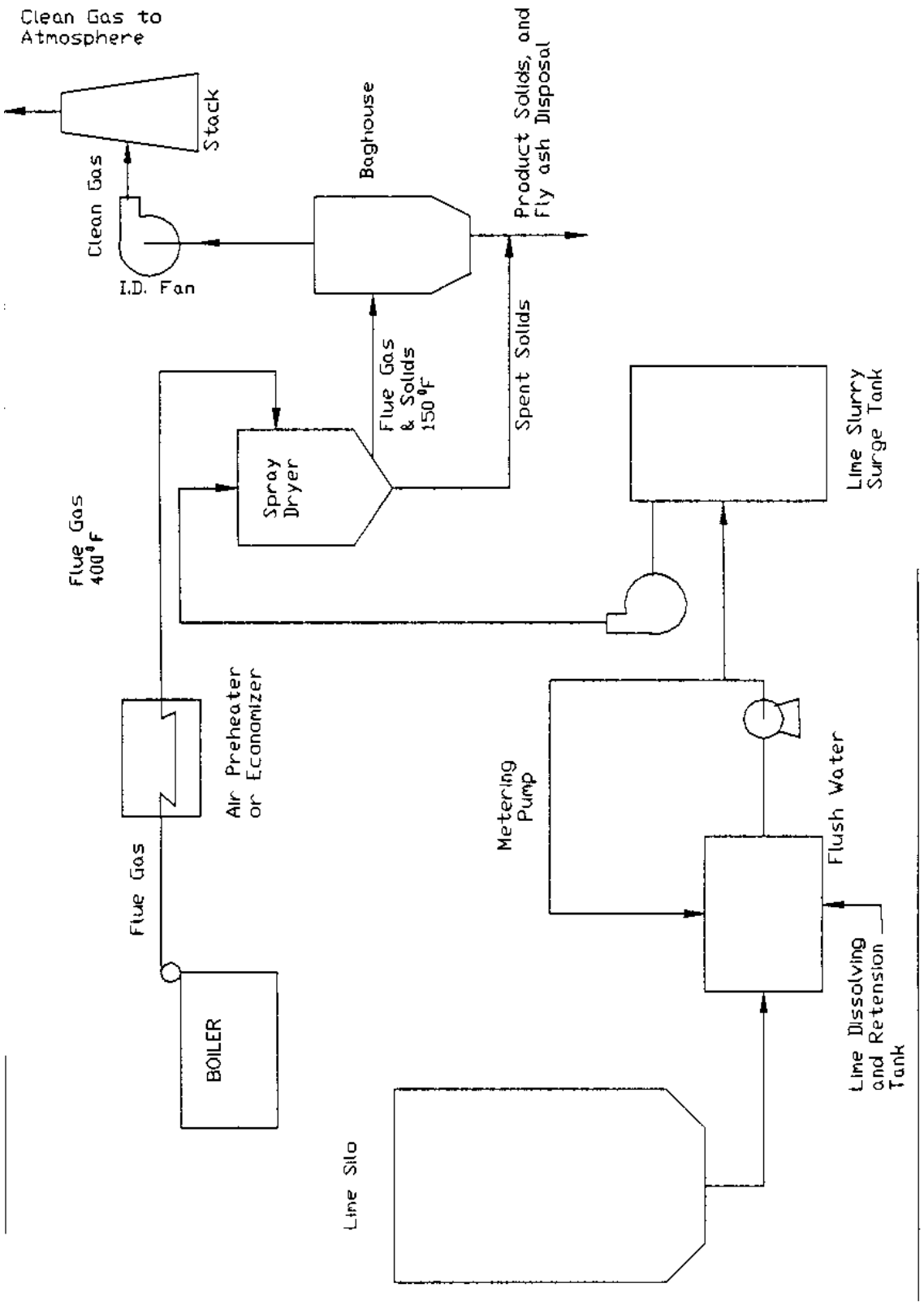

Figure 21
Typical Spray Dryer/Particulate Collector

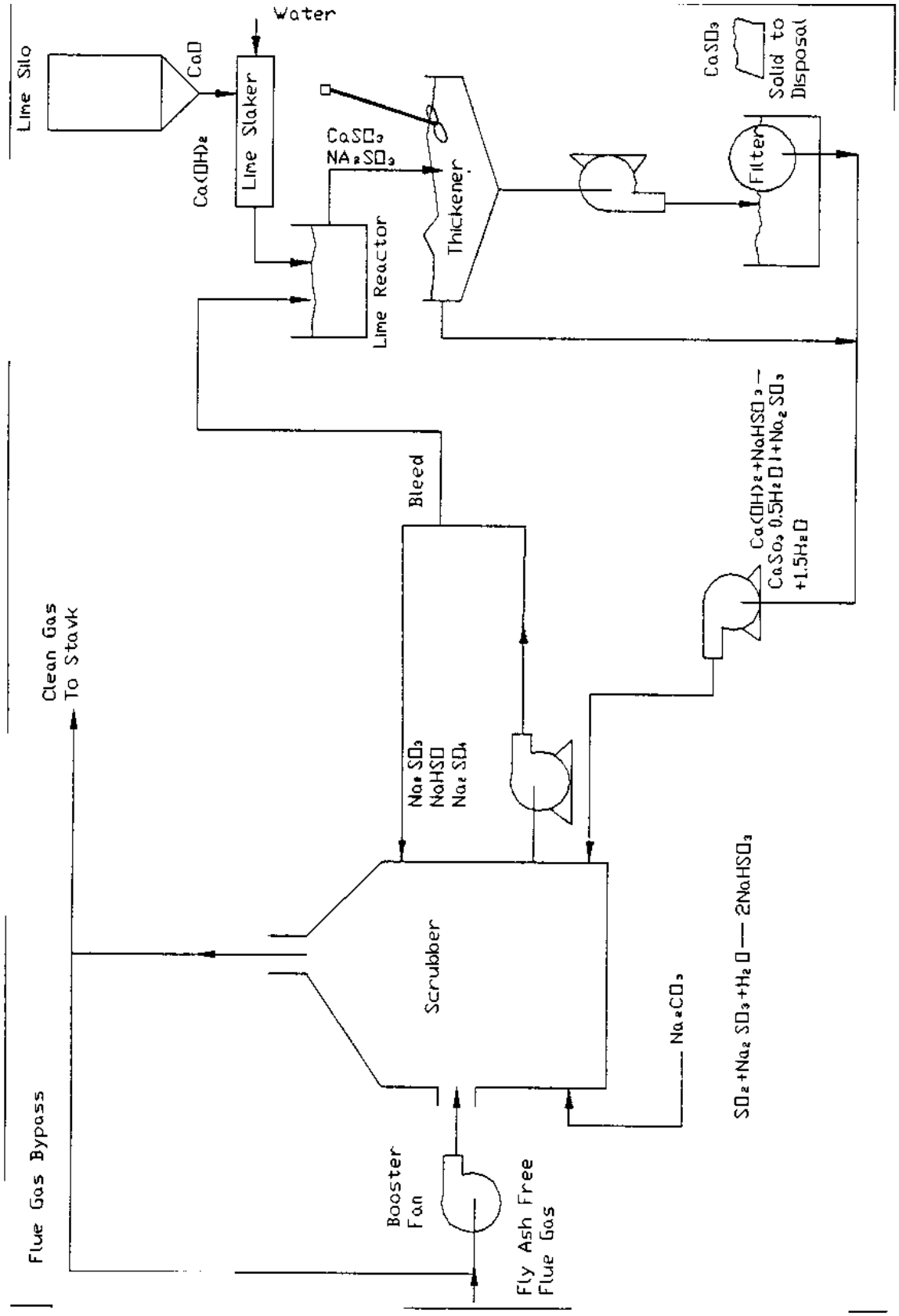

Figure 22
Process Diagram for Double Alkalai Systems

6.4.3.2 Lime or Limestone Scrubbing System. Lime or limestone scrubbing systems illustrated in Figure 23 are the oldest and most common methods of FGD for power plants. The reactants are less expensive but also less efficient than those used in the double alkali system because of their solubility. Precipitated solids and unreacted material are bled from the circuit and settled. There is a substantial amount of sludge produced by this system.

6.4.4 Plume from Stack. Flue gases leaving a wet scrubber are usually discharged as a saturated gas. As soon as the gas leaves the scrubber, it continues to lose heat to the environment, causing condensation. This condensation may take the form of a steam plume exiting the stack, or may cause serious condensation within the stack or downstream ducting, which may lead to corrosion problems. Plume formation can be limited by providing reheat to the gases; however, the cost of reheat and the cost of corrosion-resistant construction downstream of the scrubber must be considered in evaluating any scrubber system.

6.4.5 Waste Disposal. Waste disposal is a major consideration for any scrubber system. FGD waste disposal alternatives are illustrated in Figure 24. Landfill can be used for dewatered stabilized sludge, but ponds are used for wet unstable sludge. The possibility of leaching into ground water should be investigated before a decision on the site and method of sludge disposal is made. The lengths of time that the disposal site can be used must be considered as a part of this problem.

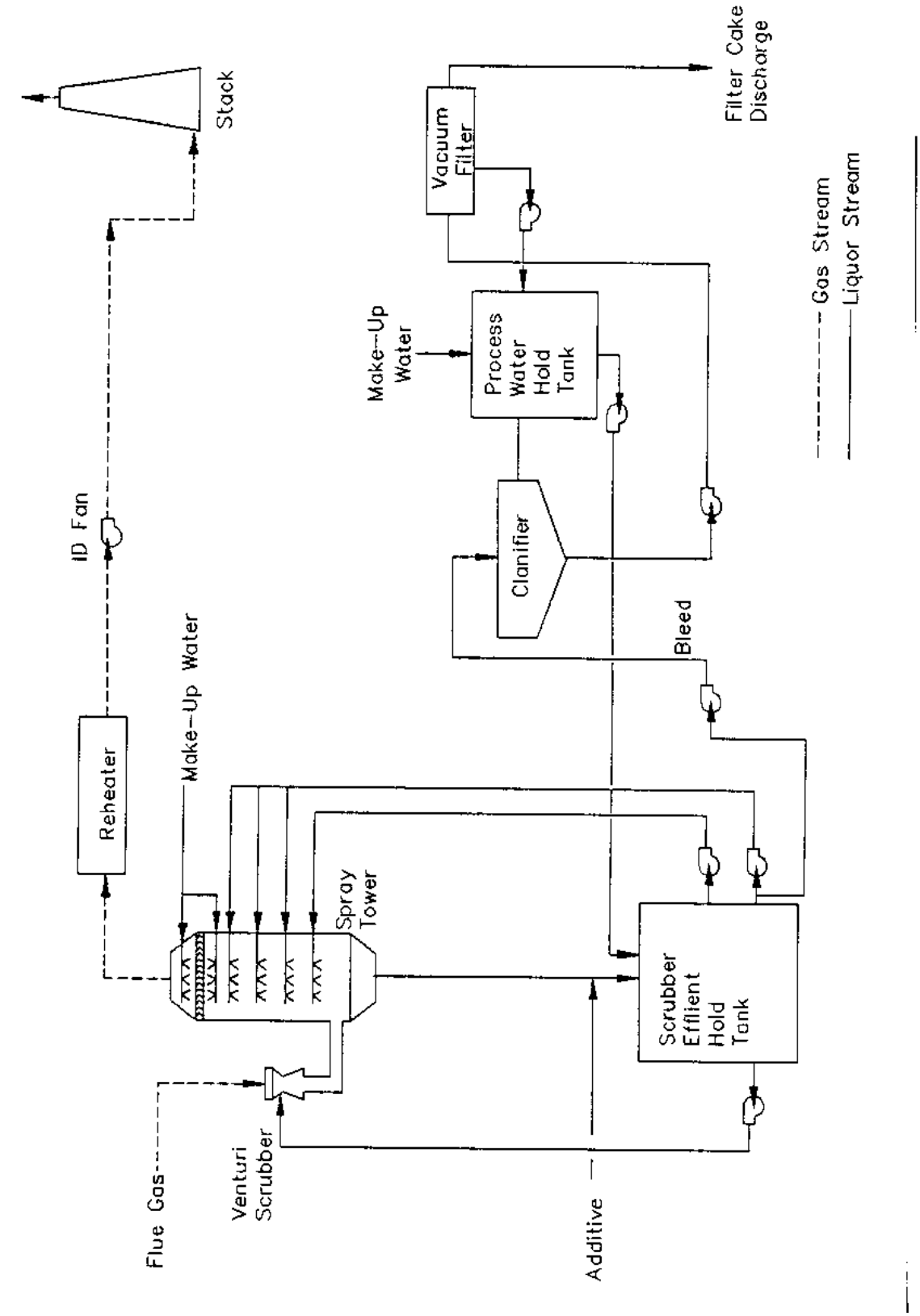

Figure 23
Process Diagram for Lime/Limestone System

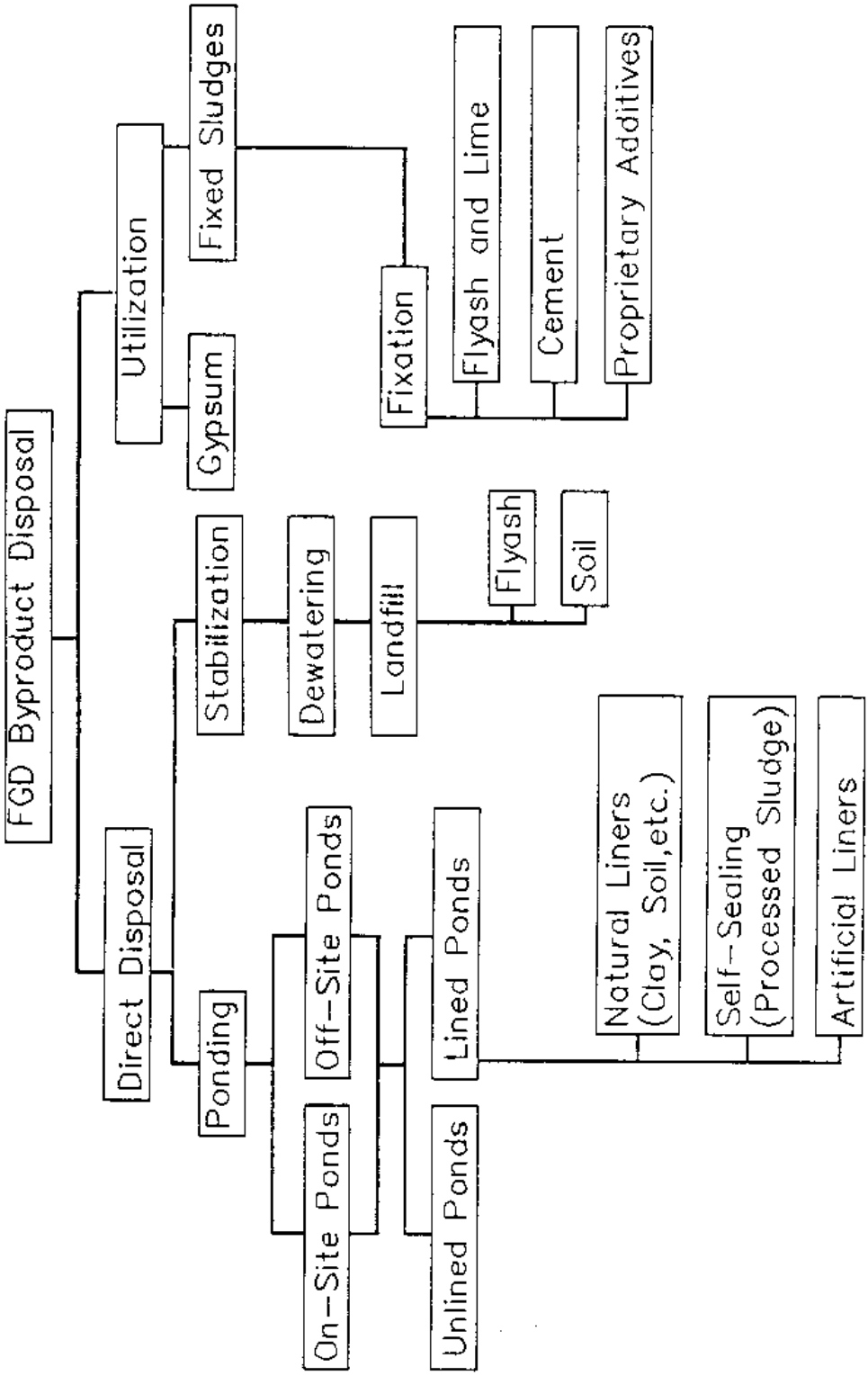

Figure 24
Flue Gas Desulfurization System and Waste Disposal

Figure 24
Flue Gas Desulfurization System and Waste Disposal

Section 7: WATER TREATMENT

7.1 Design Considerations

7.1.1 Purpose of Treatment. Boiler feedwater must be treated to remove or modify harmful constituents to avoid damage to the boilers distribution system and steam operated equipment and to improve heat transfer in the boiler. The causes and effects of inadequate water conditioning are shown in Table 16. Deposits must not form on transfer surfaces. Such deposits restrict the design water circulation in the tubes and retard heat transfer, thus raising the metal temperature. This reduction of heat transfer reduces efficiency and may result in tube rupture. Depending on the type of scale, a thickness of 1/8 inch (0.3175 m) may cause a loss of 2 or 3 percent in efficiency in the area affected.

7.1.2 Choice of Treatment. The choice of treatment and treatment facilities depends on the type of boiler, characteristics of water supply, chemical constituents of the water, and economy of treatment. A full knowledge of all these factors is essential to designing water conditioning facilities. This knowledge can be gained only by surveys of feedwater conditions affecting scale and corrosion in boilers and auxiliary heat exchange equipment. Seek advice of qualified water treatment consultants.

7.1.3 Chemicals and Conversion Factors Used in Water Treatment. See Kemmer, F.N., The Nalco Water Handbook (1979). Also, refer to Betz Handbook of Industrial Water Conditioning, 1980.

7.2 General Requirements

7.2.1 Maximum Boiler Water Limits. For boiler water limits, refer to Table 17. For requirements to provide shore steam and feedwater to non-nuclear ships, see NAVSEASYSCOM requirements outlined in NAVSEA technical manual (NSTM), Chapter 220, Boiler/Feedwater Testing & Treatment. The limits of Table 17 can be obtained by the following means:

a) Intermittent or continuous blowdown

b) Raw makeup water treatment

c) Feedwater treatment

d) Internal treatment

Table 16
Effects of Inadequate or Improper Water Conditioning

Effect	Cause (H_2O Impurity)	Remarks	Treatment
Scale	Hardness (Calcium and magnesium sulfates and carbonates)	Scale reduces water flow and heat transfer efficiency, causes tube metal overheating and thus tube burnout.	Phosphate, zeolite softeners, and chelants
	Silica (silicon dioxide)	Forms a hard, glassy coating which likewise reduces heat transfer	High alkalinity, starches, and synthetic polymers. Hot lime-zeolite.
Corrosion	Oxygen	Causes pitting of metal in boilers and in steam	Deaeration, sodium sulfite, hydrazine
	Carbon dioxide	Major cause of deterioration of condensate return lines. Major source is breakdown of bicarbonates.	Dealkalization (anion exchanger removes bicarbonates), pH control, filming and neutralizing amines
Carryover	High boiler water concentrations and oil contamination in feedwater	Causes foaming and priming of boiler with carryover in steam of constituents which deposit on turbine blades, valve seats and can cause contamination.	Blowdown, antifoams, divert condensate
Caustic embrittlement or cracking	High caustic concentration, embrittling water	Causes intercrystalline cracking of boiler metal.	Lignins, sodium nitrate

Table 17
Suggested Water Quality Limits for Boiler Water and Feedwater up to 300 PSIG

Constituents	Watertube High Steam Purity(1)	Watertube Normal Steam Purity(1)	Firetube Normal Steam Purity(1)
Feedwater(2)			
Dissolved oxygen ($mg/L\ 0_2$) measured before chemical oxygen scavenger addition(3)	0.04	0.04	0.04
Dissolved oxygen ($mg/L\ 0_2$) measured after chemical oxygen scavenger addition (4)	0.007	0.007	0.007
Total iron (mg/L Fe)	0.10	0.10	0.10
Total copper (mg/L Cu)	0.05	0.05	0.05
Total hardness (mg/L as $CaCO_3$)	0.3	0.5	1.0
pH range @ 25° C	7.5-10.0	7.0-10.5	7.0-10.5
Nonvolatile Total Organic Compound (TOC) (mg/L C)(5)	1	1	10
Oily matter (mg/L)	1	1	1
Boiler water			
Silica (mg/L $Si0_2$)	90	90	90
Total alkalinity (mg/L as $CaCO_3$)	350(6)	1000(7)	700(7)
Total dissolved solids (mg/L as $CaCO_3$)	3200(7)	7500(7)	6500(7)

(1) Values of steam purity are not given as achievement depends on many variables, including boiler water total alkalinity and specific conductance as well as design of boiler, steam drum internals, and operating conditions.

(2) Watertube boilers with relatively large furnaces and firetube boilers of conservative design with internal chelant, polymer and/or antifoam treatment can often tolerate higher levels of feedwater impurities than those in table and still achieve adequate deposition control and steam purity. Removal of these impurities by external pretreatment is always a more positive solution. Alternatives must be evaluated as to practicality and economics used in each individual case.

(3) Values in table assume existence of a deaerator.

(4) Chemical deaeration must be provided in all cases, but especially if mechanical deaeration is nonexistent or inefficient.

(5) Nonvolatile TOC is that organic carbon not intentionally added as part of the water treatment regime.

(6) Maximum total alkalinity consistent with acceptable steam purity for superheaters, turbine drives, and pier side ships. Use of demineralized water is required.

(7) Alkalinity and total dissolved solid values consistent with steam purity target. Practical limits above or below tabulated value can be established for each case by careful steam purity measurements. Relationship between conductance and steam purity is affected by too many variables to allow its reduction to a simple list of tabulated values.

Source: Betz Handbook of Industrial Water Conditioning, 1980.

7.2.2 Boiler Water Makeup. Ion exchange equipment shall be sized to assure adequate feedwater to the boilers at maximum steam load with no condensate return, when one unit is being regenerated. If low flows are expected which could cause channeling through the unit, multiple units of reduced capacity shall be used. The total capacity of the ion exchange equipment with one unit being backwashed is from 125 percent of the maximum steam plant load to 120 percent of the total boiler capacity; this includes 20 percent allowance for blowdown and other plant treated water usage.

7.2.3 Selection of Treatment Process

7.2.3.1 Methods Available. The choice of treatment depends on many factors. Selection may be made from the following processes with the choice usually being a combination of these methods:

a) Continuous or intermittent blowdown,

b) Internal treatment,

c) Ion exchanger (sodium cation, chloride anion, hydrogen cation),

d) Lime-soda softening, cold or hot,

e) Demineralization (cation and anion exchangers).

7.2.3.2 Selection Guide. Table 18 is a general guide to raw water treatment of boiler makeup and the conditions under which each method or combination should be used. For more specific recommendations, retain a specialized consultant.

7.2.3.3 Effect of Treatment. For the effectiveness of different treatment processes, refer to Table 19.

7.2.3.4 For Pier Side Ships. For boilers providing steam to pier side ships, it will generally be necessary to utilize demineralizers to treat boiler feedwater to meet NAVSEASYSCOM requirements outlined in NAVSEA technical manual NSTM Chapter 220.

7.3 Blowdown

7.3.1 General. Essentially pure water vapor is generated in a boiler and the impurities (dissolved solids) of the boiler feedwater remain and become concentrated. The concentration of dissolved solids can be controlled by discharging boiler water with a high dissolved solids concentration as blowdown and replacing the discharged amount of boiler water with feedwater of low mineral concentrations. The blowdown must be adjusted so that the dissolved solids entering the boiler will equal those leaving and the maximum concentration of dissolved solids is limited to or maintained at a predetermined value.

7.3.2 Types. Every boiler system has two types of blowdowns. The upper blowdown is either intermittent or continuous operation. It is used to control concentrations of dissolved solids. This blowdown is generally connected to the steam drum of a water tube boiler in a location which will minimize the inclusion of feedwater, chemical feed and steam entrainment. The other blowdown is from the mud drum or the water walls. It is an intermittent or mass blowdown which removes accumulated solids and sludge from stagnated areas of the boiler. This blowdown is usually performed at reduced steam loads. Blowdown in firetube boilers is located near the point of highest concentration of dissolved solids in the water, i.e., near the bottom of the boiler.

Table 18
General Guide for Raw Water Treatment of Boiler Water Makeup

Makeup requirements gpm (L/s)	Steam pressure psig (kPa)	Raw Water Concentration: Silica grains per cubic foot (mg/L)	Raw Water Concentration: Alkalinity grains per cubic foot (mg/L) $CaCO_3$	Water Treatment
10 to 100 (0.63 to 6.31)	16 to 200 (110 to 1379)	< 6.6 (15)	< 32.8 (75)	Sodium ion exchange.
			> 32.8 (75)	Sodium + hydrogen exchange.
			> 32.8 (75)	Sodium ion exchange + chloride anion exchange.
	200 to 450 (1379 to 3103)	< 6.6 (15)	< 21.9 (50)	Sodium ion exchange.
			> 21.9 (50)	Sodium + hydrogen exchange.
Over 100 (6.31)	16 to 200 (110 to 1379)	< 6.6 (15)	< 32.8 (75)	Sodium ion exchange exchange.
			> 32.8 (75)	Sodium + hydrogen ion exchange, or hot lime soda, or hot lime ion exchange, or cold lime ion exchange.
		> 6.6 (15)	> 32.8 (75)	Hot lime ion exchange, or hot lime soda, or cold lime ion exchange.
	200 to 450 (1379 to 3103)	< 6.6 (15)	< 21.9 (50)	Sodium ion exchange.
			> 21.9 (50)	Hot lime ion exchange, or cold lime ion exchange, or hot lime soda, or sodium ion exchange + chloride anion exchange.
		> 6.6 (15)	> 21.9 (50)	Hot lime ion exchange, or cold lime ion exchange or, hot lime soda.

Notes: Guide is based on boiler water concentration listed in Table 16.
Add filters when turbidity exceeds 10 mg/L.
See Table 19 for effectiveness of treatments.
mg/L = ppm < over < under

Table 19
Effectiveness of Water Treatment

Treatment	Average Analysis of Effluent: Hardness (as $CaCO_3$) Grins per Square Foot (mg/L)	Alkalinity (as $CaCO_3$) Grains per Square Foot (mg/L)	CO_2 in steam	Dissolved Solids Grains per Square Foot (mg/L)	Silica Grains per Square Foot (mg/L)
Cold lime ion exchange	0 to 0.87 (2)	328 (75)	Med - high	Reduced	3.5 (8)
Hot lime soda	7.43 (17) to 10.9 (25)	15.3 (35) - 21.9 (50)	Med - high	Reduced	1.3 (3)
Hot lime ion exchange	0 to 0.87 (2)	8.7 (20) - 10.9 (25)	Low	Reduced	
Sodium ion exchange	0 to 0.87 (2)	Unchanged	Low - high	Unchanged	Unchanged
Sodium + hydrogen ion exchange	0 to 0.87 (2)	4.4 (10) - 13.1 (30)	Low	Reduced	Unchanged
Sodium zeolite + chloride anion exchange	0 to 0.87 (2)	6.6 (15) - 15.3 (35)	Low	Unchanged	Unchanged

Note: mg/L = ppm

7.3.3 Concentration of Dissolved Solids. Concentration of dissolved solids in boiler water are given in Table 17. The percent of boiler blowdown is governed by the allowable concentration ratio (CR) or the number of times a dissolved solid may be concentrated over the amount of dissolved solids in the feedwater. The allowable concentration ratios are determined by a chemical analysis of the boiler feedwater and by the type of makeup water treatment. Refer to Kemmer, 1979 for further information.

A boiler operated on exceptionally high quality feedwater or subject to minimal make-up may be able to operate successfully with very little blowdown. The required blowdown may be accomplished with a short bottom blow. Border line cases may reduce blowdown to acceptable intermittent operation by proper external treatment of make-up water. An economic analysis can determine if the added cost of heat recovery equipment is justified.

7.3.4 Intermittent Blowdown of Steam Drum. The boiler water is periodically discharged through an open blowoff valve for short times when the dissolved solids concentrations reach a maximum (or often before); this operation often results in high-low cycles of dissolved solids concentrations and excessive heat loss. This is more costly than continuous blowdown.

7.3.5 Continuous Blowdown. The boiler water is continuously discharged in an amount which maintains a constant boiler water concentration ratio of solids. For a typical diagram, see Figure 25. Continuous Blowoff Piping Diagram.

7.3.6 Boiler Blowdown Piping and Valve Standards. See the ASME Boiler and Pressure Vessel Code, Section 1 Para. PG-59.3.3 and para. A-56 to A-60, and ANSI/ASME B31.1, for minimum requirements.

7.3.7 Calculations. Calculate percent blowdown as follows.

EQUATION: Percent Blowdown = 100 /CR (10)

where: CR = concentration ratio

Calculate continuous blowdown rate as follows:

EQUATION: $Z = B \times C/(A - B)$ (11)

where:

Z = Blowdown rate in pounds per hour (pph).
A = Predetermined boiler water concentration as total solids in parts/million (ppm) or mg/L.
B = Total solids in feedwater as fed to boiler in parts per million (ppm) or mg/L.
C = Steam output in pounds per hour (pph).

For an example of design calculations for continuous blowdown equipment, assume the following values:

Total solids in makeup	170 ppm	(170 mg/L)
Total solids in condensate return	25 ppm	(25 mg/L)
Total solids in boiler water (A)	2,500 ppm	(2 500 mg/L)
Steaming rate (C)	15,000 pph	
Losses in system	6,000 pph	
Blowdown (by trial and error)	530 pph	
Makeup = blowdown plus losses =	6,530 pph	
Condensate = steam rate minus losses =	9,000 pph	

$$B = \frac{(6{,}530 \text{ pph} \times 170 \text{ ppm}) + (9{,}000 \text{ pph} \times 25 \text{ ppm})}{(6{,}530 + 9{,}000) \text{ pph}}$$

$$= 86 \text{ ppm} = 86 \text{ mg/L}$$

Substituting in Equation 11:

$$Z = \frac{86}{2{,}500 - 86} \times 15{,}000 \text{ pph} = 534 \text{ pph}$$

7.4 Internal Treatment

7.4.1 Function. All steam generating systems, where steam is evaporated leaving cumulative solids from the feedwater in the boiler, should be treated with chemicals internally while the system is in operation. Internal treatment is also used to eliminate oxygen not removed by the deaerator. Table 17 gives the limiting boiler water concentrations.

7.4.1.1 Blowdown. Intermittent and continuous blowdown ensure that these limits are not exceeded. Raw water treatment limits the amounts of dissolved solids entering the steam generator.

7.4.1.2 Chemicals Used. The actual internal chemical treatment, aside from the method of feeding and controlling the treatment, is part of the plant operation. A list of chemicals for internal treatment is given in Table 20 to assist in selection of the feeding method.

7.4.2 Chemical Feeding Equipment

7.4.2.1 Mixing or Dissolving Tank. For small installations, the mixing tank may consist of a steel barrel with proper piping connections, or it may be combined, as shown in (a) of Figure 26. A more elaborate dissolving tank for larger plants is shown in (b) of Figure 26.

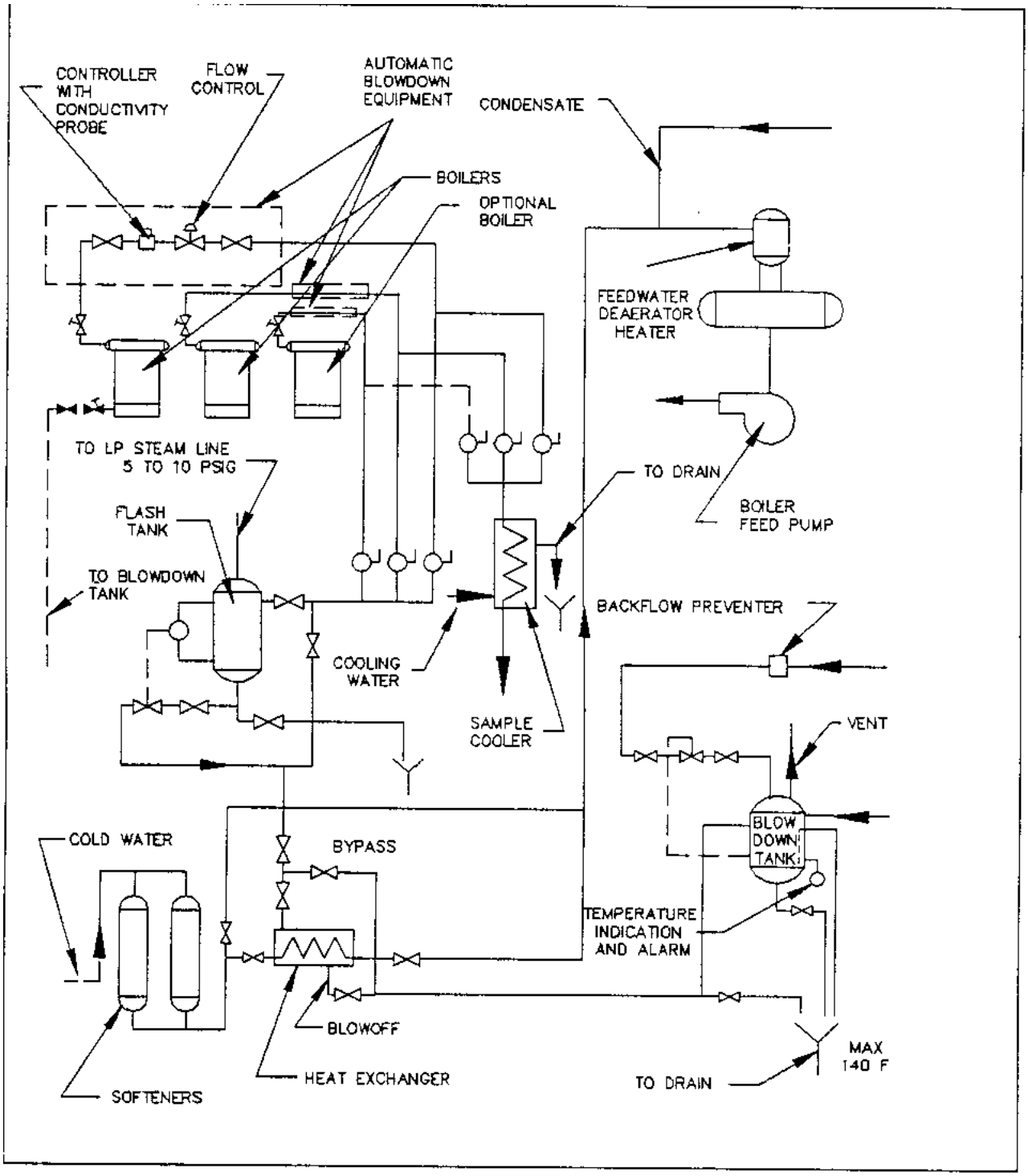

Figure 25
Continuous Blowoff Piping Diagram

Table 20
Chemicals for Internal Boiler Water Treatment

Chemicals	Purpose	Comment
Sodium hydroxide NaOH (caustic soda)	Increase alkalinity, raise pH, precipitate calcium sulfate as the carbonate.	Strong alkali requires special handling.
Sodium carbonate Na_2CO_3 (soda ash)	Increase alkalinity, raise pH, precipitate magnesium.	Lower cost, more easily handled than caustic soda. But some carbonate breaks down to release CO_2 with steam.
Sodium phosphates NaH_2PO_4, Na_2HPO_4, Na_3PO_4 $NaPO_3$	Precipitate calcium as hydroxyapatite ($Ca_10(OH)_2(PO_4)_6$).	Alkalinity and resulting pH must be kept high enough for this reaction to take place (pH usually above l0.5).
Chelants: EDTA (Ethylene diamine tetraacetic acid) NTA (nitrilotriacetic acid)	Removal of calcium and magnesium.	Forms soluble complex ions with calcium and magnesium thus minimizing blowdown. High-NTA temperature corrosion potential.
Sodium sulfite Na_2SO_3	Precipitate calcium and magnesium; prevent oxygen corrosion.	Forms a flocculent sludge. Used to neutralize residual oxygen by forming a sodium sulfate.
Hydrazine hydrate $N_2H_4.H_2O$ (35 percent solution).	Prevent oxygen corrosion.	Remove residual oxygen to form nitrogen and water. One part of oxygen reacts with three parts of hydrazine (35 percent solution).

Table 20 (Continued)
Chemicals for Internal Boiler Water Treatment

Chemicals	Purpose	Comment
Filming amines; Octadecylamine, etc.	Control return-line corrosion by forming a protective film on the metal surfaces.	Protects against both oxygen and carbon dioxide attack. Small amounts of continuous feed will maintain the film. Do not use where steam contacts foods.
Neutralizing amines; Morpholine, cyclohexylamine, benzylamine, diechylaminoethanol (DEAE), amino-methy-isopropanol (AMP).	Control return-line corrosion by neutralizing CO_2	About 2 ppm of amine is needed for each ppm of carbon dioxide in steam, but actual ratio depends on amine selected due to its distribution ratio. Keep pH in range of 7.5 to 8.5 or higher. These chemicals will not be used if steam comes into contact with food or surgical instruments. Morpholine at concentrations higher than 40 % is flammable and should not be used.
Sodium nitrate, $NaNO_3$	Inhibit caustic embrittlement.	Used where the water may have embrittling characteristics.
Tannins, starches, glucose, lignin derivatives and polymeric dispersants.	Prevent feed line deposits, coat scale crystals to produce fluid sludge that won't adhere as readily to boiler heating surfaces.	These organics, often called protective colloids, are used to distort scale crystal.

Table 20 (Continued)
Chemicals for Internal Boiler Water Treatment

Chemicals	Purpose	Comment
Seaweed derivatives; (Sodium alginate, Sodium mannuronate)	Provide a more fluid sludge and minimize carryover.	Organics often classed as reactive colloids since they react with calcium and magnesium and absorb scale crystals.
Antifoams; (Polyamides, etc).	Reduce foaming tendency of highly concentrated boiler water.	Usually added with other chemicals for scale control and sludge dispersion. Boilers l25 psig and above, all power plant boilers.

Notes:

(1) Hydrazine and Morpholine are highly toxic. Care must be exercised and mixing and feeding equipment must be provided to prevent skin contact or inhalation of chemical.

(2) Provide adequate ventilation, washing facilities, eye wash, protective clothing and mask storage in the storage and handling area.

7.4.2.2 Feeding Schemes. Use one of the following chemical feeding methods.

a) Scheme 1 (see Figure 27). This method may be used where there is no feedwater heater and where space permits a setting for the chemical mixing tank, high enough to overcome the suction pressure of the boiler feedwater pump. An agitator may be needed to properly mix powders. The only equipment needed is a chemical mixing tank and valved piping, or tubing from the tank to the suction side of the boiler feedwater pump. All chemicals, including polyphosphates but not orthophosphates, may be fed in this manner.

Sodium sulfite injected in this way protects both the feedwater suction piping and the boiler feedwater pump from oxygen corrosion.

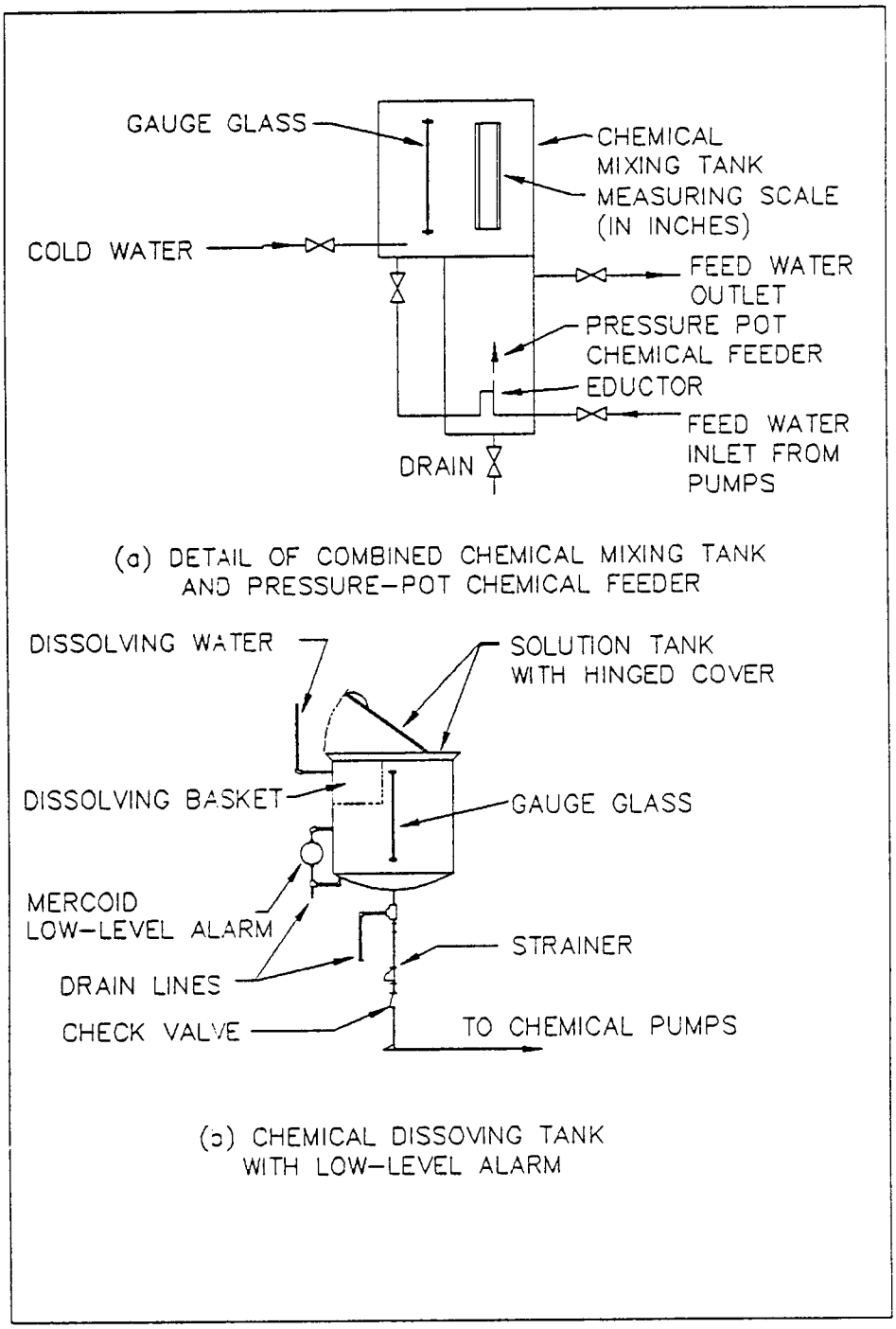

Figure 26
Arrangements for Chemical Mixing

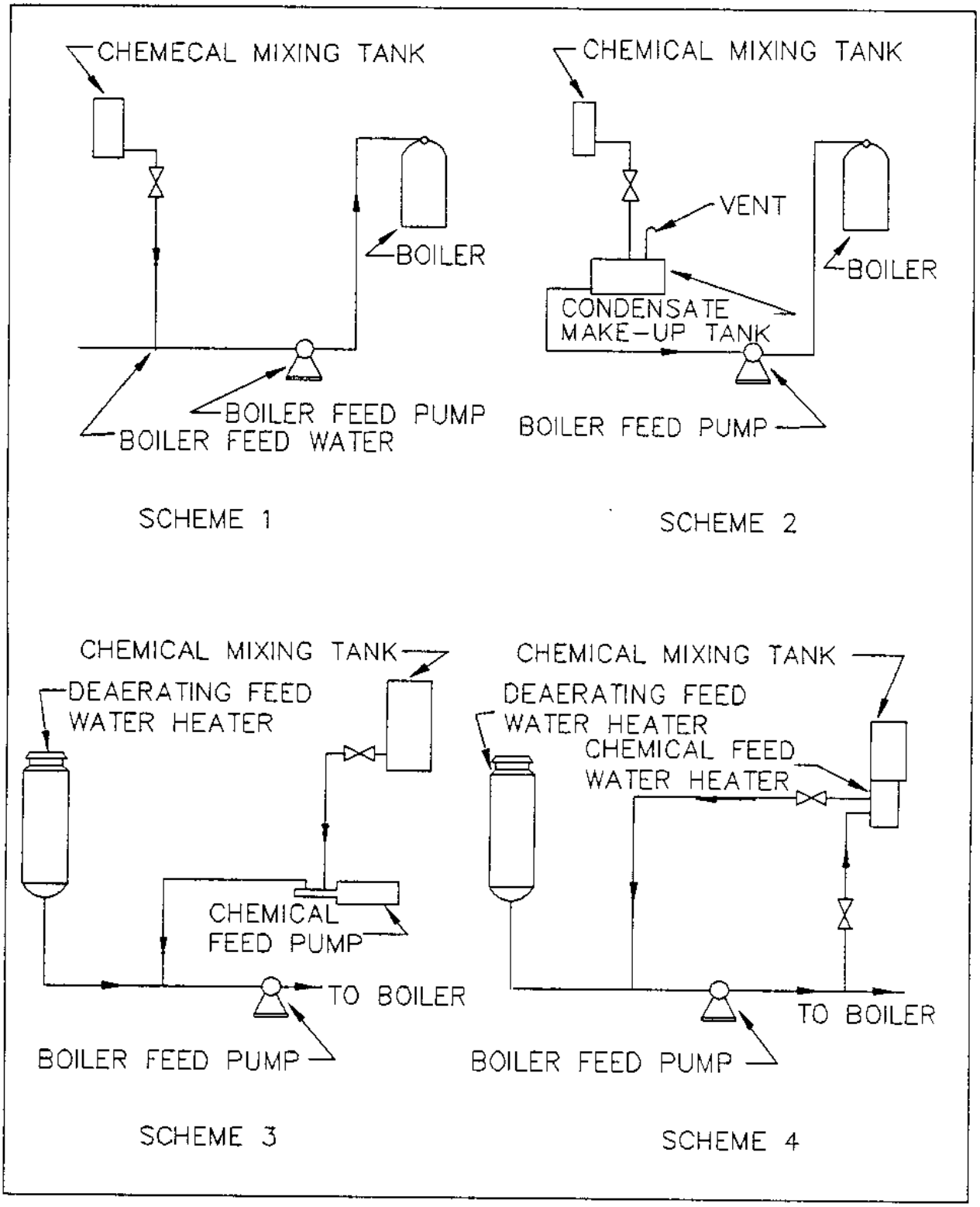

Figure 27
Chemical Feed Arrangements (Schemes 1-4)

b) Scheme 2 (see Figure 27). This method may be used where there is no feedwater heater between the combined condensate raw water makeup tank and the boiler feedwater pump. The only feeding equipment needed is a chemical mixing tank with a valved connection to the top of the combined condensate raw water makeup tank. All chemicals may be fed by this scheme, except phosphates. If phosphates are introduced into the combined condensate raw water makeup tank, deposits of calcium phosphate will foul both the tank and the feedwater piping.

c) Scheme 3 (see Figure 27). This method may be used if there is a deaerating feedwater heater. The chemicals are injected into the suction side of the boiler feedwater pump. To overcome suction pressure a low-pressure chemical feed pump is used. All chemicals may be fed in this manner except orthophosphates.

d) Scheme 4 (see Figure 27). This method also may be used if there is a deaerating feedwater heater. The feeding device is installed as a by-pass around the boiler feedwater pump. It is a simple and convenient method of feeding all chemicals, except orthophosphates. A chemical mixing tank, combined with the pressure-pot feeder and valved piping, is used instead of the chemical feed pump of Scheme 3. Polyphosphates should be fed continuously unless an "on-off" boiler operation is used; then connect to chemical feed pump.

e) Scheme 5 (see Figure 28). This method has the feed device installed as a by-pass around the boiler feedwater regulator, it may be used wherever it can be operated conveniently. The equipment is the same as for Scheme 4.

f) Scheme 6 (see Figure 28). This method is similar to Scheme 4 (by-pass around the boiler feedwater pump), except that a water jet eductor is installed to draw the solution from the che mical mixing tank and discharge it into the suction side of the feedwater pump. All chemicals (except orthophosphate) may be fed in this manner. Care must be taken to avoid sucking air into the feedwater system, because air promotes oxygen corrosion. The valve marked "A" must be shut off before the chemical mixing tank empties.

g) Scheme 7 (see Figure 28). This method is applicable to multiboiler installations. Feedwater discharge pressure forces the chemicals from the pressure-pot feeder to the boilers. By means of a shut-off valve in each branch, the chemicals may be fed separately in accordance with individual boiler dosage requirements. Phosphates should be shot-injected in this manner, and the lines flushed out after each use.

h) Scheme 8 (see Figure 28). This method is similar to Scheme 7, except that a high pressure chemical feed pump takes suction from the chemical mixing tank and discharges to the boilers. All chemicals may feed continuously. Lines should be flushed out periodically.

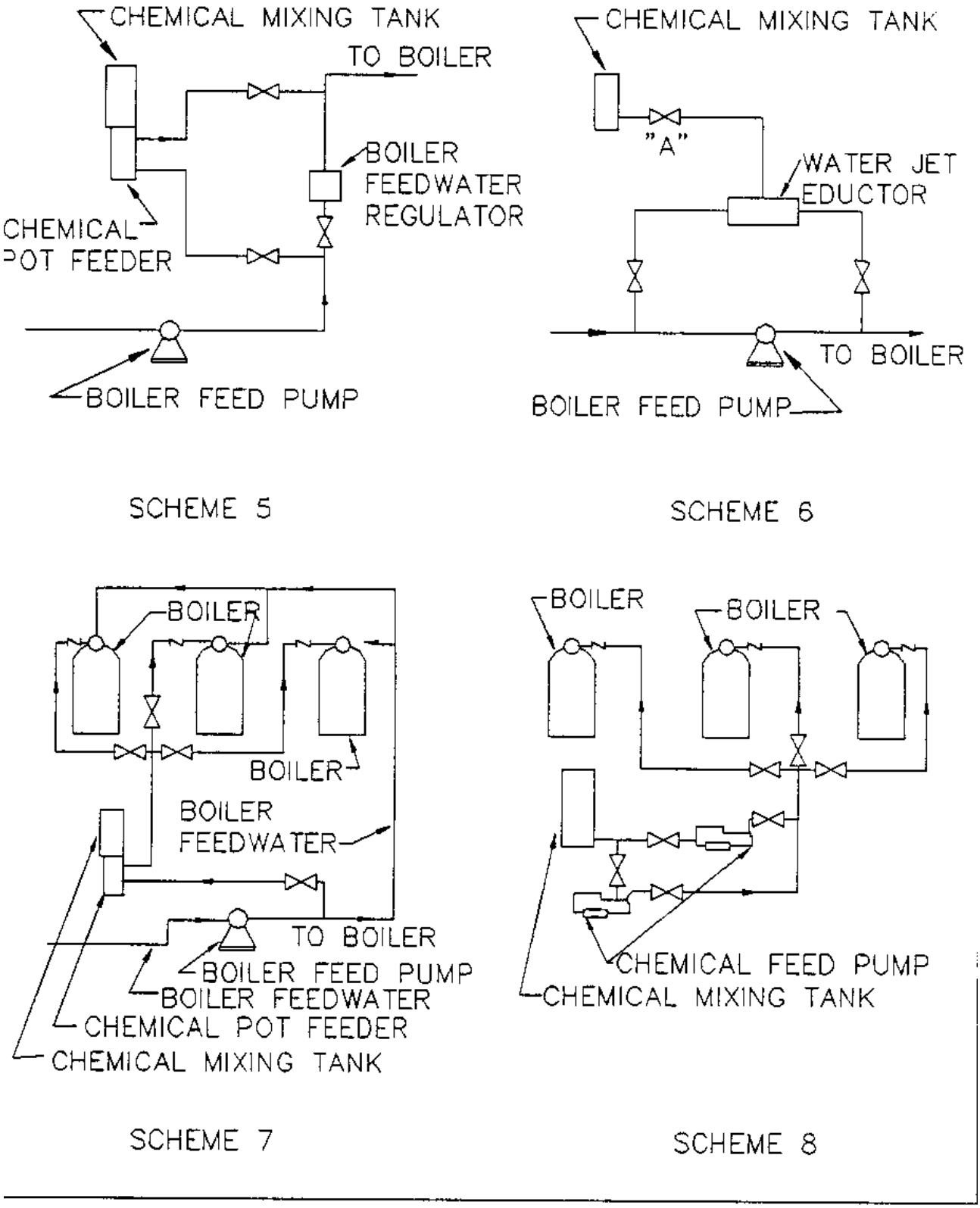

Figure 28
Chemical Feed Arrangements (Schemes 5-8)

7.4.2.3 Feeders. Depending on various factors, select one of the following feeders:

a) A chemical feed proportioning pump that adjusts speed and stroke,

b) Pot type feeders for dissolving chemical crystals, lumps, and briquettes, as in (a) of Figure 29,

c) Pot type feeder for feeding alum and soda ash in proportion to makeup flow, as in (b) of Figure 29.

7.4.2.4 Sample Coolers. Boiler water samples, taken from the boiler for analysis, must be cooled to approximately boiler-room temperature in a sample cooler. See Figure 30, for method of installation. The cooler should be connected upstream of the continuous blowdown, or to the water column. One cooler may serve two or more boilers. If possible, locate it near the laboratory sink where tests for boiler water residuals are made.

Steam samples, taken from the boiler discharge header, must be cooled to room temperature in a sample cooler. These samples are necessary to determine the carbon dioxide and oxygen content of the steam, and for special studies in connection with carryover, foaming, and priming, terms that describe conditions causing the entrainment of the boiler water solids in particles of water with the steam. If possible, provide a separate steam sampling nozzle for each boiler. The installation is schematically shown in Figure 30. The nozzle and method of connection should conform ASTM/ASME Method D 1066, Sampling Steam. The preferred location with respect to position in the order of decreasing preference is: (a) vertical pipe, downward flow, (b) vertical pipe, upward flow, (c) horizontal pipe with horizontal insertion, (d) horizontal pipe, with vertical insertion. The steam sample cooler should be separate from that for boiler water, because otherwise it is possible to mix in residual solids remaining from the water analysis. All piping, connections and valves conveying the steam to the sample cooler must be corrosion-resistant material such as stainless steel.

7.5 Ion Exchange Softening

7.5.1 Ion Exchange Water Softening. This method of softening is generally used as the first step in makeup water treatment. A makeup water analysis should be performed to determine the constituents in the water which need to be handled by the treatment program. A typical makeup water analysis form is included in Table 21. The treated makeup water is generally mixed with returned condensate to provide the feedwater to the boiler. Refer to Table 17. The choice of ion exchange material should depend on the end result desired. Seek advice of qualified water treatment consultants for the proper ion exchange materials.

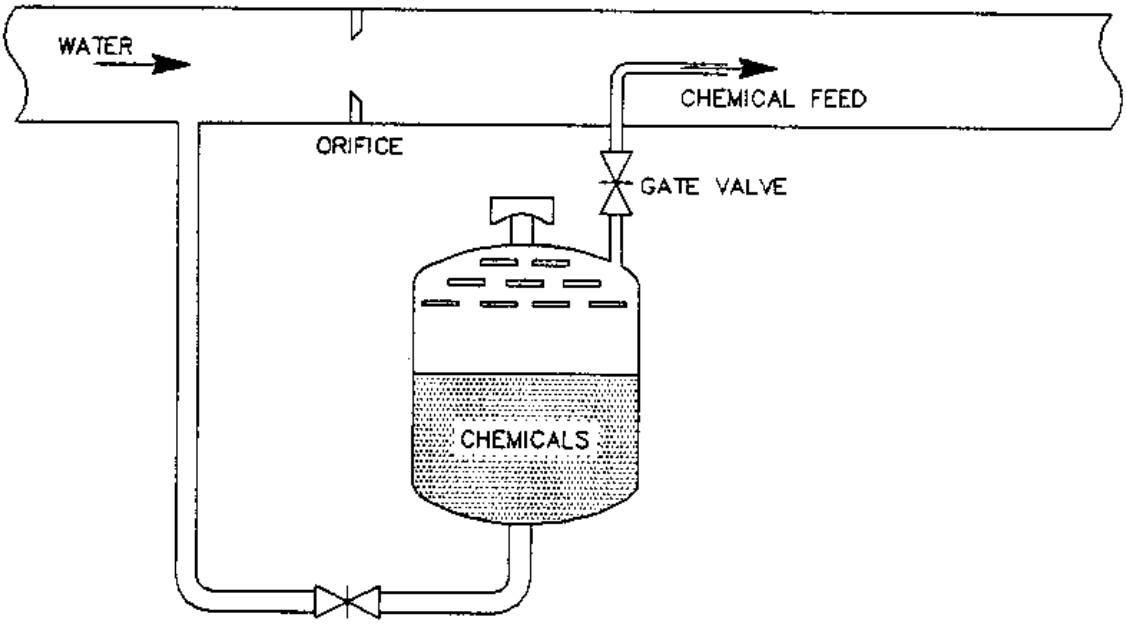

(a) POT TYPE FEEDER

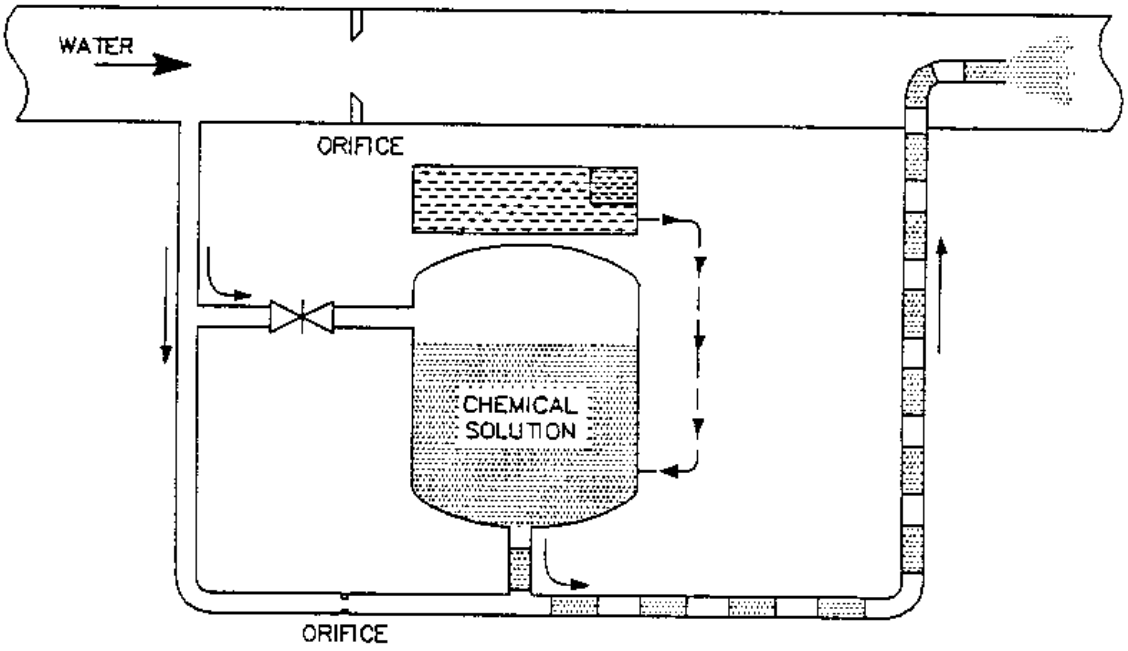

(b) PRESSURE SOLUTION

Figure 29
Pot Type Feeders

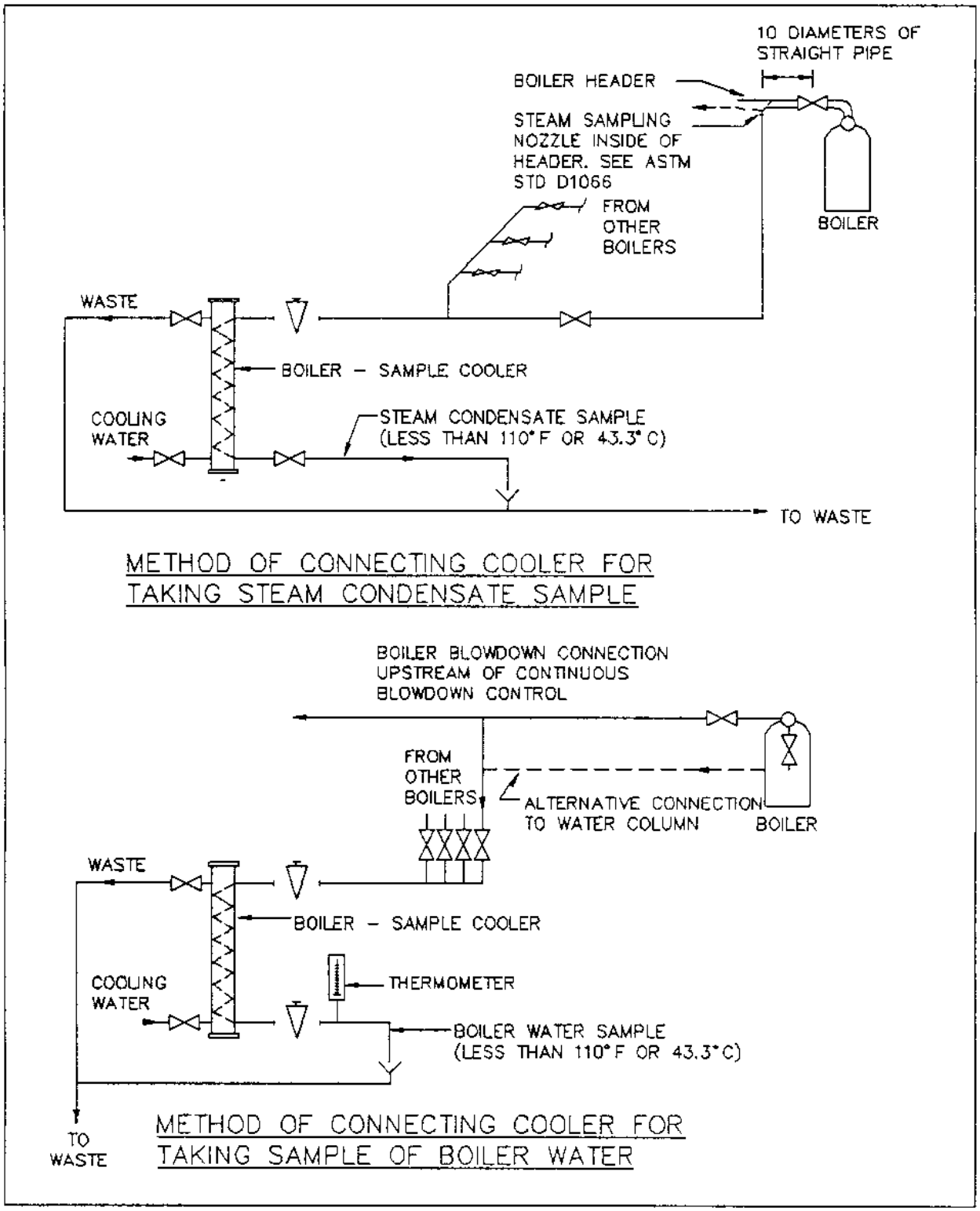

Figure 30
Sample Coolers

Table 21
Makeup Water Analysis

Constituent		Analysis	Parts Per Million (ppm)
Cations			
Calcium	(Ca^{++})	as $CaCO_3$	_____
Magnesium	(Mg^{++})	as $CaCO_3$	_____
Sodium	(Na^{+})	as $CaCO_3$	_____
Hydrogen	(H^{+})	as $CaCO_3$	_____
Total Cations		as $CaCO_3$	_____
Anions			
Bicarbonate	(HCO_3^{-})	as $CaCO_3$	_____
Carbonate	(CO_3^{--})	as $CaCO_3$	_____
Hydroxide	(OH^{-})	as $CaCO_3$	_____
Sulfate	(SO_4^{--})	as $CaCO_3$	_____
Chloride	($C1^{-}$)	as $CaCO_3$	_____
Phosphate	(PO_4^{---})	as $CaCO_3$	_____
Total Anions		as $CaCO_3$	_____
Total Hardness		as $CaCO_3$	_____
Methyl Orange Alkalinity		as $CaCO_3$	_____
Phenolphthalein Alkalinity		as $CaCO_3$	_____
Iron, Total		as Fe	_____
Carbon Dioxide		as free CO_2	_____
Silica		as SiO_2	_____
Suspended Solids			_____
Total Dissolved Solids			_____
Free Acid			_____
Color			_____
pH			_____
Specific Conductance		micro mhos/cm	_____

Notes:
(1) Total anions equal total cations
(2) Total hardness equals calcium plus magnesium (all as ppm $CaCO_3$)

7.5.2 Sodium Cation Exchanger. See Figure 31. Use this treatment to reduce water hardness without affecting the alkalinity. The exchanger tanks are often hooked up in parallel, each unit being sized to handle service flow while the other is regenerating.

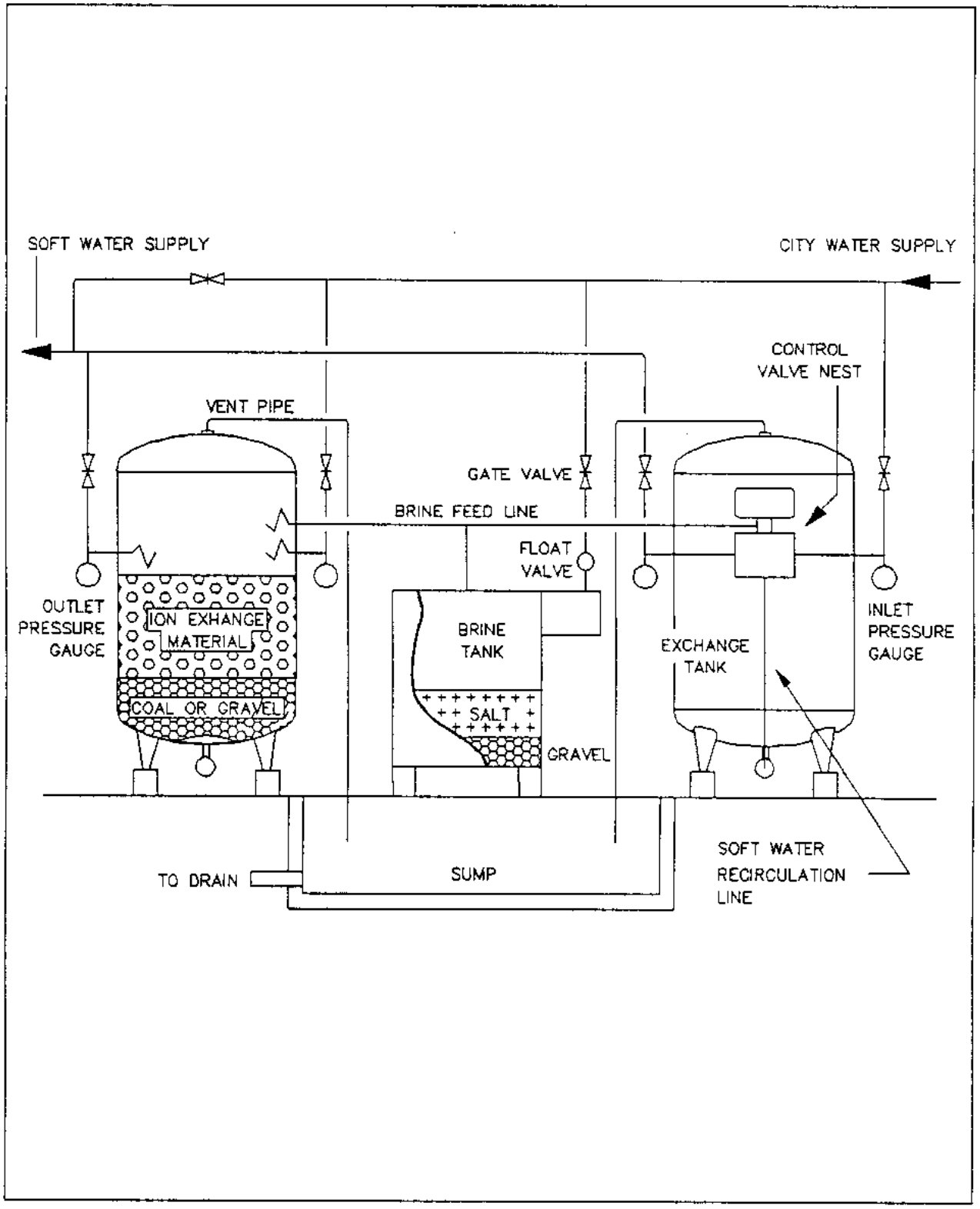

Figure 31
Sodium - Cation Exchanger

7.5.2.1 Control. Control of the softening and regeneration cycles may be either automatic, semi-automatic (manual initiation), or manual.

a) Manual systems -- Provide a valve nest or a multiport valve to control the steps in regeneration. A water meter shall indicate water flow through the unit.

b) Automatic systems -- Provide a meter on the soft water effluent line to actuate the multiport control valve after a predetermined quantity of water has been softened. An automatic valve nest may be provided in lieu of the multiport.

The heart of regeneration control, automatic and manual operation, is the multiport valve, which opens and closes the ports for the various operations of regeneration. The multiport valve shall have a manual operator for emergency use. Additional control is provided by rate-of-flow controllers for wash and rinse water. For the cold water ion-exchange process, provide either float-operated butterfly valves, in sumps, or automatic-throttling backwash outlet valves of the multiport type by properly located orifice plates.

For the hot ion-exchange process, a valve nest is used, the backwash rate must be controlled to avoid thermal shock and resin carryover. Brine may be transferred from the brine measuring tank to the ion-exchange tank either by pump or hydraulic eductor.

7.5.2.2 Computation. Calculation of the size of equipment should be done in accordance with the following example.

a) Assume 100 gpm continuous makeup and total hardness of 171 ppm (i.e. 171 mg/L or 75 grains/cubic foot as calcium carbonate).

b) The amount of daily makeup at 100 gpm (0.379 cubic meters) is 144,000 gallons (545.5 cubic meters). In the double unit system each softener handles half this amount, or 72,000 gallons.

c) If each softener is sized to regenerate daily, the unit capacity must be 72,000 gallons times 10 grains per gallon, or 720,000 grains, or 720 kilograins.

d) A styrene-based cation resin is rated at 25,000 grains per cubic foot and is regenerated with 10 pounds of salt per cubic foot. The amount of resin for 720,000 grains is found by dividing 720,000 grains by 25,000 grains per cubic foot; therefore 28.8 cubic feet of resin is required.

e) The maximum unit flow of 10 gallons per minute per square foot requires 10 square feet (0.929 square meters) of area. The closest unit size is 42 inches (1.07 m) in diameter. The exchanger bed depth is then about 3 ft (0.9 m).

f) With supporting gravel and rinsing space for backwash, the height will be 6 ft 3 inch (1.91 m). This based on a 1 ft (0.305 m) support bed and a rinse space height equal to 3/4 of the resin bed depth. Rinse space or freeboard should be not less than 18 inches.

g) Regeneration for the selected resin requires 10 pounds of salt per cubic foot (160.2 kg/cubic meter) of resin times 28.8 cubic feet (0.811 cubic meters) or 288 pounds (130.6 kg).

h) The amount of salt per 1,000 gallons (3.79 cubic meters) of softened water is 288 divided by 72 or 3.96 pounds.

7.5.3 Sodium Hydrogen Ion Exchange Split Stream Softening. This system reduces both hardness and alkalinity when arranged as in Figure 32. It blends water from the hydrogen and sodium units for 4.4 to 13.1 grains per cubic foot alkalinity. A degasifier after the cation exchangers will reduce the carbon dioxide from the hydrogen cation exchanger. The proportion of flow through the hydrogen cation exchanger about equals the alkalinity reduction divided by the total cations, as calcium carbonate. Since both the regenerant and effluent water of the hydrogen cation unit are acid, the tank is usually fiberglass reinforced plastic (FRP) and the piping polyvinyl chloride (PVC).

7.5.4 Sodium Cation Chloride Anion Conditioning. This system, as arranged in series (see Figure 33), reduces hardness and alkalinity but increases the chloride content. Cations are exchanged in the sodium-cation system and anions in the chloride-anion system. The latter reduces alkalinity 80 to 90 percent, using salt and caustic. Since no acid is required, this system is favored for low pressure boilers, even though other methods are often more economical and efficient. Caustic will increase capacity only if total alkalinity is less than 50 percent of total anions; otherwise caustic provides no benefit.

7.5.5 Demineralizer. A demineralization unit is a combination of a hydrogen cation exchanger with an anion exchanger. See Figure 34. After the hydrogen cation process, the effluent contains dilute hydrochloric and sulfuric acid, plus carbon dioxide. Hydrogen ions have also converted the dissolved silica to hydrogen silicon trioxide. The effluent then passes through the anion exchanger. Refer to Table 18, for recommended applications.

7.5.5.1 Weakly Basic Material. If a weakly basic material is used in the anion exchanger, the acids are neutralized but both carbon dioxide and silica pass through the exchanger. Utilize a degasifier to remove the carbon dioxide mechanically to a residual carbon dioxide content of 2 to 5 milligrams per liter. Weak base materials are used when the raw water is high in sulfate and chlorides, and when silica is not objectionable.

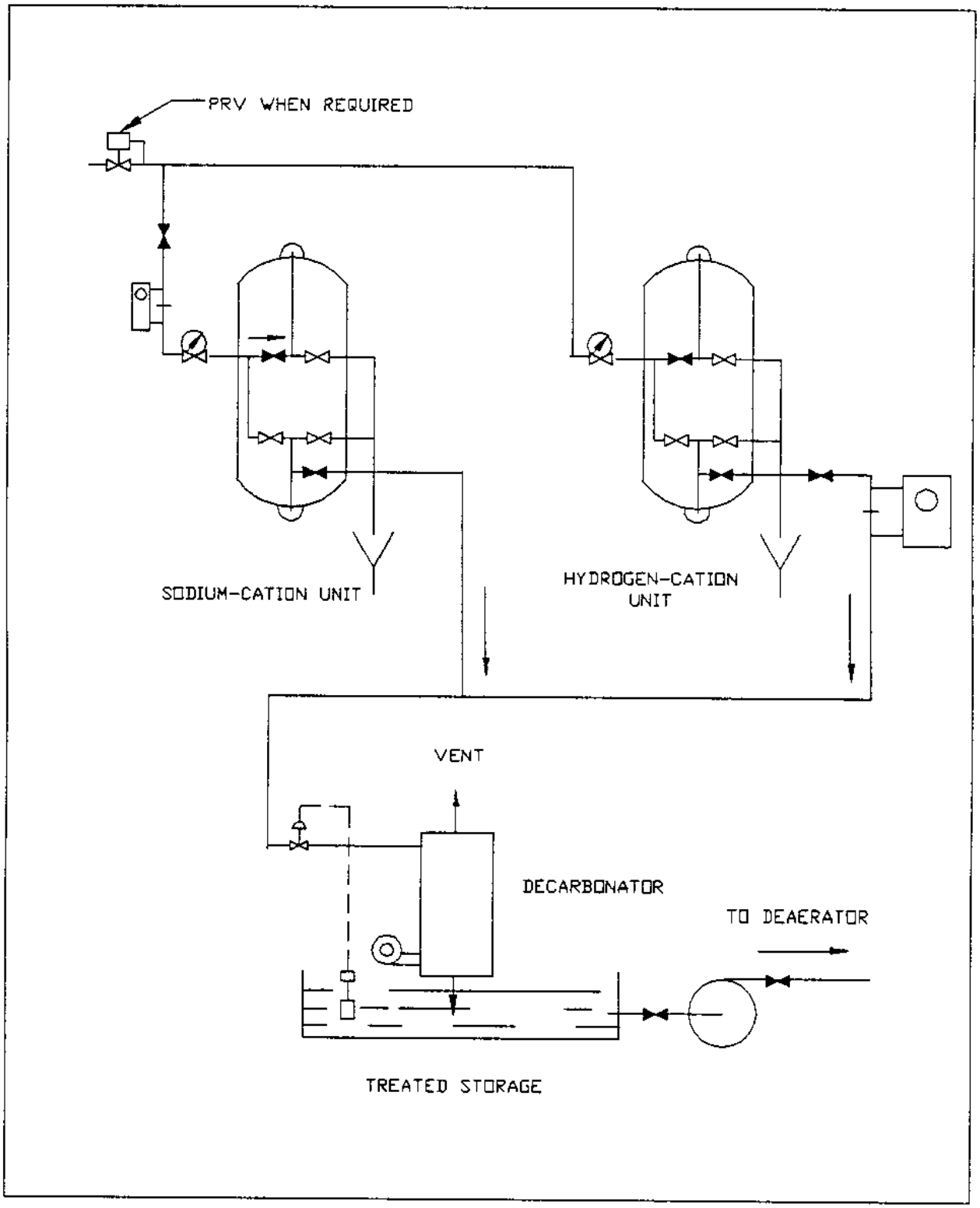

Figure 32
Sodium - Hydrogen Ion Exchange Split Stream Softening

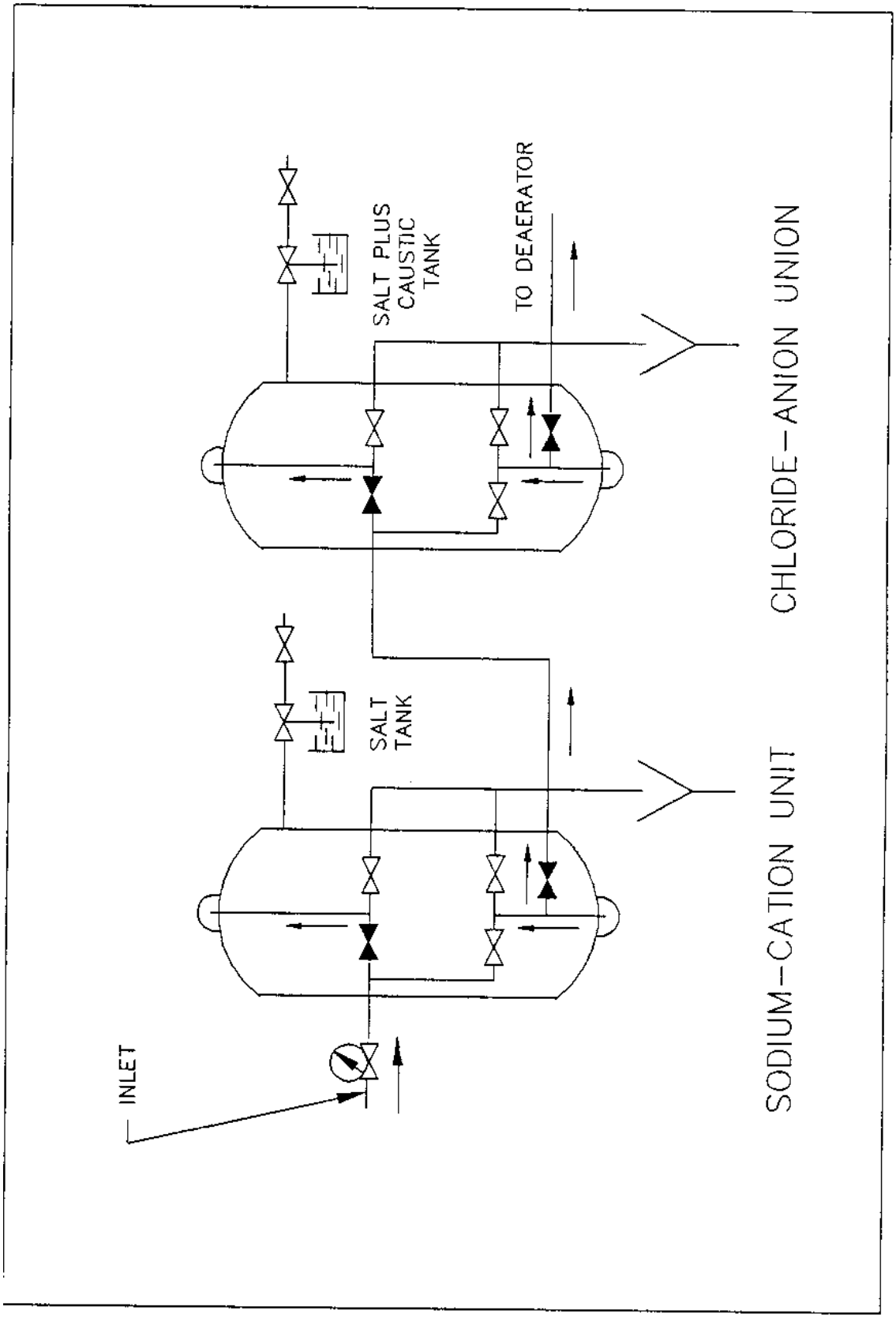

Figure 33
Sodium Cation - Chloride Anion Exchanger

Figure 33
Sodium Cation - Chloride Anion Exchanger

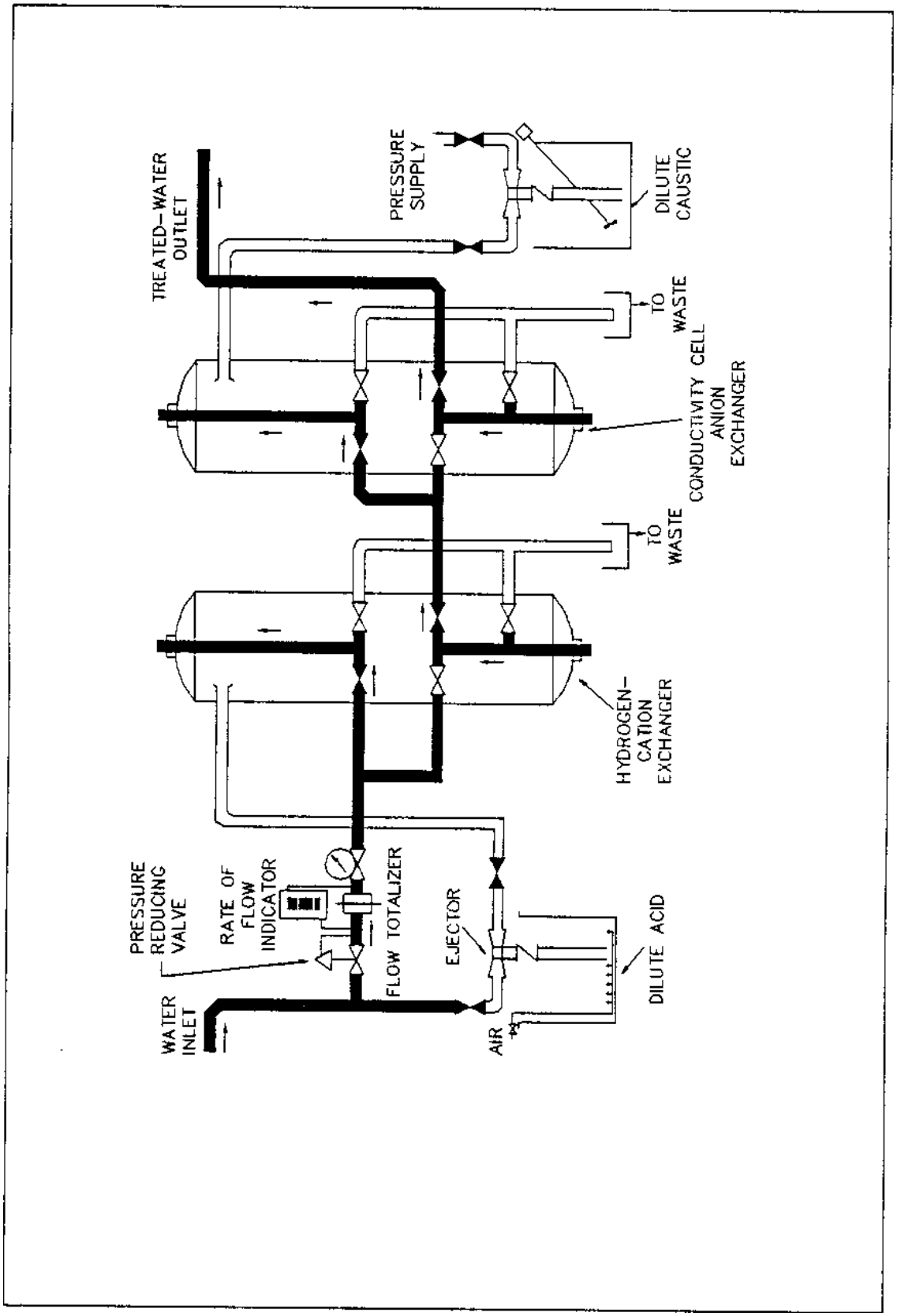

Figure 34
Cation - Anion Exchanger Demineralizer

7.5.5.2 Strongly Basic Material. If a strongly basic material is used in the exchanger, acids are absorbed by the anion resin. In reality, no chemical exchange takes place. The resin picks up (absorbs) the siliceous acid but, in return, does not give up anything to the makeup water, except water. No solids are added to the makeup water. By similar reactions, the demineralizing anion unit absorbs carbonic acid, sulfuric acid, and hydrochloric acid which are the end products of the hydrogen cation process. A degasifier or vacuum deaerator should be installed after the cation exchanger to reduce the carbon dioxide load on the anion exchanger. A demineralizing unit of this type produces top quality makeup water for high pressure boilers.

7.5.5.3 Mixed-Bed Demineralizer. A mixed-bed demineralizer is a single vessel containing an intimate mixture of cation and anion exchanger material. The mixed bed is equivalent to an almost infinite number of two-step demineralizers in series. Mixed-bed treated water is the closest approach to pure water. It is recommended in preference to the multi-bed unit where first cost is important and operating cost is secondary.

7.5.5.4 Demineralizer versus Evaporators. A demineralizing system is able to produce high quality water without heat. An evaporator requires heat. This fact is important in starting up a boiler plant. The evaporator is tied in with a fixed plant heat cycle, while the demineralizer is independent. An economic study to select one should include equipment cost, owning costs, value of evaporator heat loss or energy degradation, chemical operating cost, and labor maintenance charges.

7.5.5.5 Sizing Demineralizers. Sizing of these units is similar to that for sodium cation exchangers. Raw water flow and total dissolved solids affect the overall operating and owning costs. Continuous boiler blowdown is reduced.

7.6 Other External Treatment

7.6.1 Filters. Pressure filters may be used to remove suspended matter by straining, screening, and frictional resistance; see Figure 35.

7.6.1.1 Media. Generally, use sand as the filtering material for cold water; for above 125 degrees F (79.75 degrees C), anthracite coal should be substituted to avoid silica dissolving in the hot water.

7.6.1.2 Size. Size the filter for a maximum flow rate of 3 gpm per square foot (0.002 cubic meters per second per square meter) of filter area.

7.6.1.3 Backwash. The rate of backwash should be 12 to 15 gpm per square foot (0.149 to 0.186 cubic meters per second per square meter) of filtering area for sand, and 8 to 10 gpm per square foot (0.0005 to 0.0007 cubic meters per second per square meter) for anthracite coal. The rate should be accurately regulated by an orifice, a rate-of-flow controller, or other means.

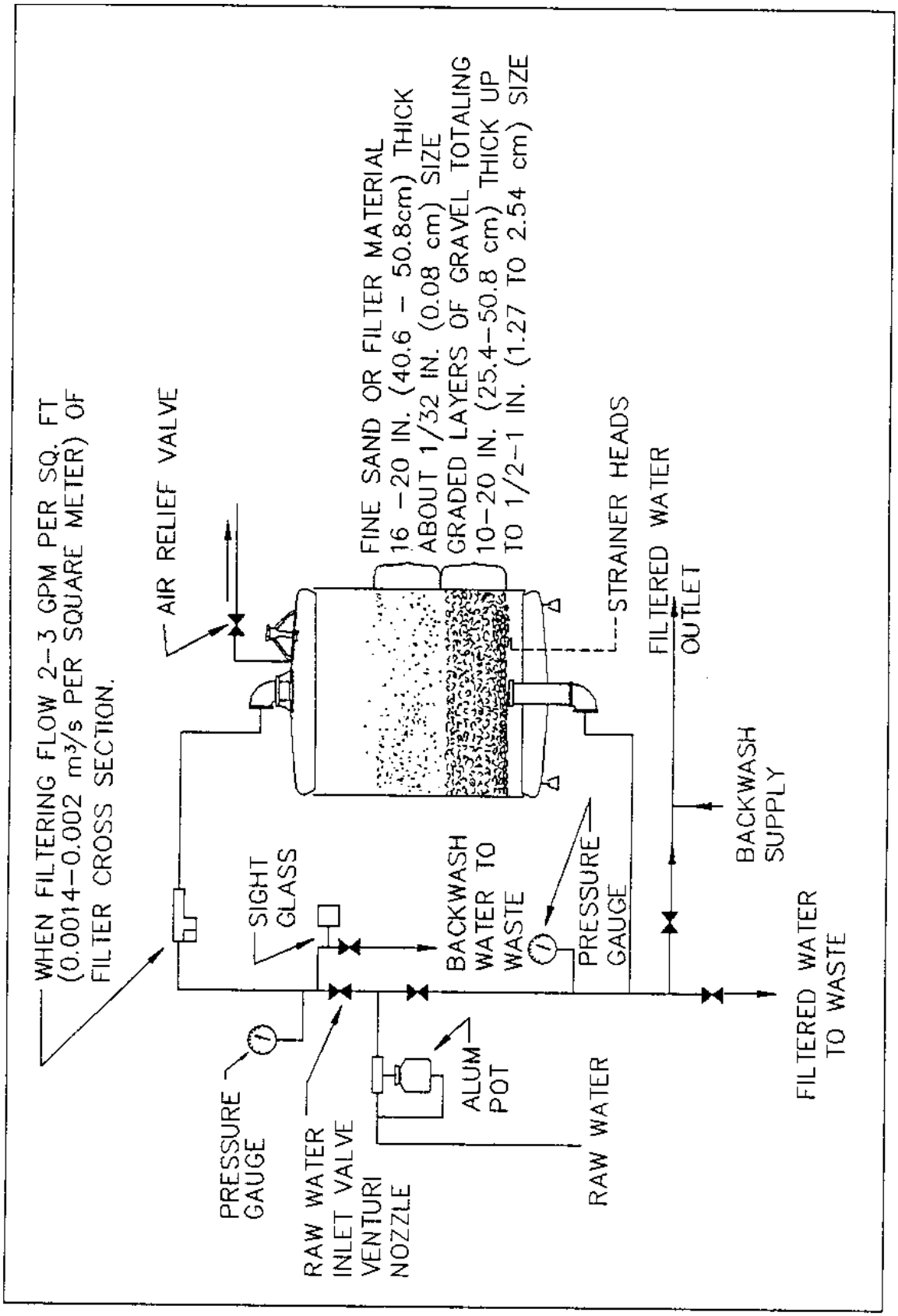

Figure 35
Typical Vertical Steel Shell Pressure Filter

7.6.1.4 Coagulation. A coagulant such as sodium aluminate may be added to the raw water ahead of the filter to form a filterable floc by reaction with the bicarbonates.

7.6.2 Lime-Soda Softening

7.6.2.1 Cold Process. The cold lime or lime-soda process may be used to reduce hardness and chemical constituents. For this purpose, provide an open vessel and chemical feeders for adding lime or caustic soda alone (or lime and soda ash). Lime alone will remove carbonate hardness by precipitating magnesium hydroxide and calcium carbonate; the addition of soda ash will remove noncarbonate hardness. The choice of chemicals depends on the chemical constituents in the water.

7.6.2.2 Hot Process. In hot-process softening (see Figure 36) impurities are precipitated in a tank at a temperature of 200 to 220 degrees F (93.3 to 104.4 degrees C), or higher. Chemicals are fed to the makeup water in the upper zone, react with impurities, and precipitate them. Water then flows to the bottom, rises through the sludge blanket, and discharges to anthracite filters. Sludge settling in a cone at the bottom of the tank is removed by blowdown. The process is economical when objectives include the reduction of hardness and organic matter, dissolved solids, alkalinity, and silica. The removal of iron and free carbon dioxide are incidental advantages.

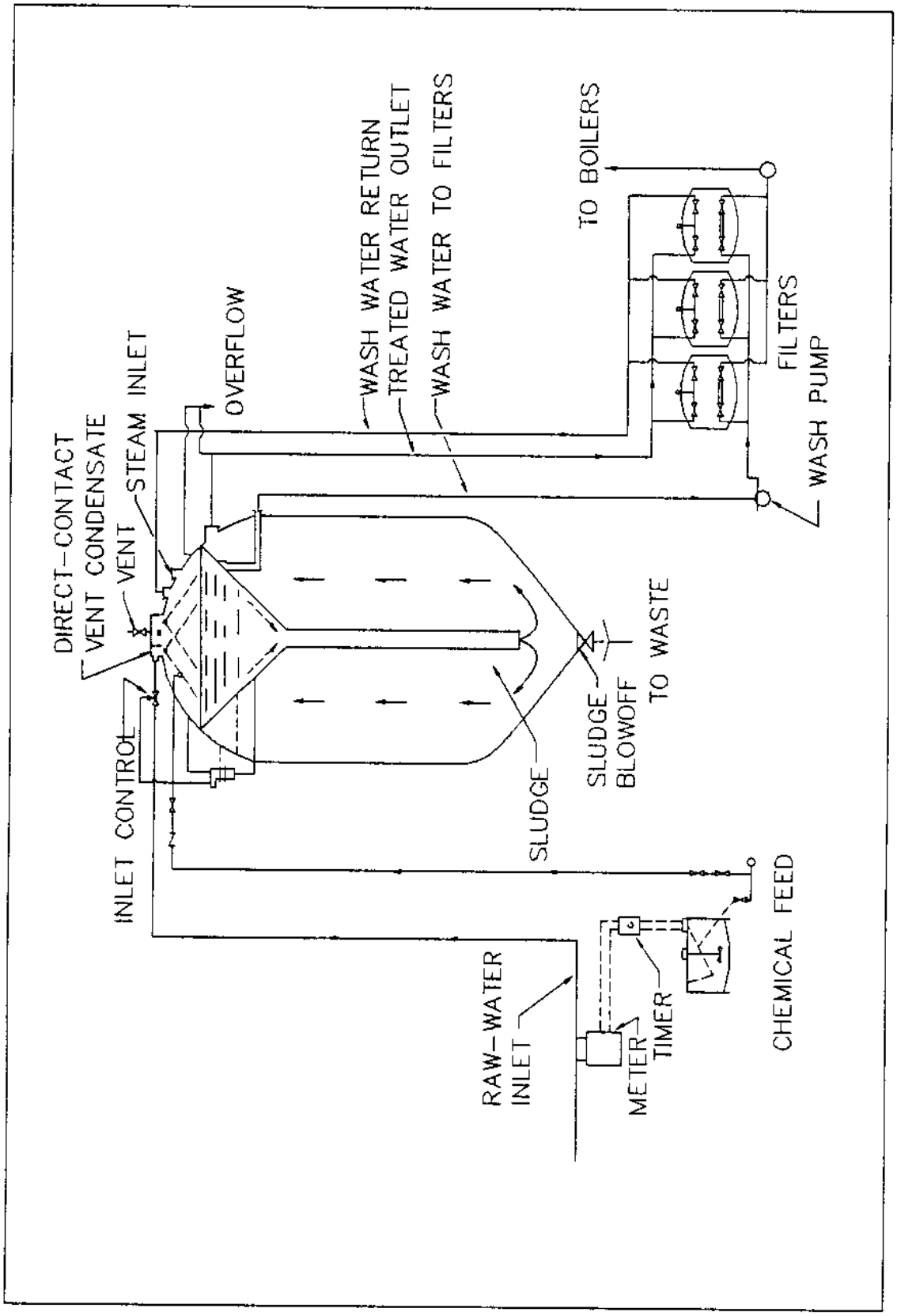

Figure 36
Hot Process Softener Conical Downtake Design

Section 8: AUXILIARY BOILER ROOM EQUIPMENT AND SYSTEMS

8.1 Scope. This section focuses on the major pieces of equipment and systems relating to central heating plants and on criteria which help in selection and operation of such equipment.

8.2 Pumps

8.2.1 Types. The major types of pumps in the process industries are centrifugal, axial, regenerative turbine, reciprocating, metering, and rotary. These pumps can be grouped into two categories: dynamic and positive displacement (refer to Table 22).

a) Dynamic pumps include centrifugal and axial types. These pumps operate by developing a high liquid velocity which is converted to pressure in a diffusing flow passage. These pumps operate at high speed, provide high flow rates and generally require less maintenance than positive displacement pumps.

b) Positive displacement pumps include rotary displacement, reciprocating plunger or reciprocating steam driven types. These pumps operate by forcing a fixed volume of fluid through gear teeth, sliding vanes, screws or other principals into the pumps discharge zone. They are self priming and work with high viscosity fluids. All positive displacement pumps have "slip" which displaces less fluid volume than the actual displacement of the piston or rotating element. However, when positive displacement pumps are in good condition, their efficiencies exceed those of small capacity centrifugal pumps. Reciprocating type pumps are generally high maintenance items due to lubrication and packing gland problems. They have been largely replaced except for special applications. Flow rate changes for rotary displacement or fixed plunger pumps can be accomplished by speed control or modulated by-pass. Variable stroke pumps can have the stroke adjusted automatically. Reciprocating steam driven pumps are easily controlled by governors on the steam supply.

8.2.2 Selection. When selecting a pump the following items must be considered: operating pressure, temperature, corrosiveness, abrasiveness, specific gravity, motor type, suction pipe arrangement, size, location, mounting, coupling, valve requirements, and overall efficiency. Table 22 summarizes operating parameters for various pumps and is provided to assist in the selection of pumps.

8.2.3 Inlet Conditions. Net Positive Suction Head (NPSH) -- The net positive suction head (NPSH) is the total suction head in ft of liquid absolute determined at the suction nozzle and referred to datum less the vapor pressure of the liquid in ft absolute. If the NPSH is less than required, the fluid will cavitate; a good safety margin is 2 to 3 ft of fluid. Cavitation is the vaporization of fluid in the casing or suction line. If the fluid pressure is less than the vapor pressure, pockets of vapor will form. As

Table 22
Summary of Operating Performances of Pumps

TYPICAL PUMP TYPE/STYLE	CAPACITY (gpm)	MAX HEAD (ft)	NPSH REQ (ft)	MAX KINEMATIC VISCOSITY (square inch (ssu)
CENTRIFUGAL:				
HORIZONTAL				
Single-stage overhung	950-30,000	492	6.6-20	1.01
Two-stage overhung	950-71,000	1394	6.6-22	0.67
Single-stage overhung	$950\text{-}2.4\times10^{6}$	1099	6.6-25	1.01
Chemical	950-62,000	239	3.9-20	1.01
Slurry	950-62,000	394	4.9-25	1.01
Canned	$95\text{-}1.2\times10^{6}$	4922	6.6-20	0.67
Multi horiz split	$950\text{-}6.7\times10^{5}$	5495	6.6-20	0.67
Multi barrel type	$950\text{-}5.2\times10^{5}$	5495	6.6-20	0.67
VERTICAL				
Single-stage process	$950\text{-}6.2\times10^{5}$	804	1-20	1.01
Multistage	$950\text{-}4.8\times10^{6}$	6004	1-20	0.67
In-line	$950\text{-}7.1\times10^{5}$	705	1-20	0.67
High-Speed	285-24,000	5807	7.9-40	0.17
Sump	950-43,000	197	1-22	0.67
Multi deep well	285-24,000	6004	1-20	0.67
AXIAL propeller	$950\text{-}6.2\times10^{6}$	39.4	6.6	1.01
TURBINE regenerative	$95\text{-}1.2\times10^{5}$	2493	6.6-8.2	0.17
POSITIVE DISPLACEMENT				
RECIPROCATING		(psi)		
Piston, plunger	$950\text{-}6.2\times10^{5}$	50038	12	1.71
Metering	0-950	74985	15.1	1.71
Diaphragm	95-5,700	5004	12.1	1.16
ROTARY				
Screw	$95\text{-}1.2\times10^{5}$	3002	9.8	150×10^{6}
Gear	$95\text{-}3\times10^{5}$	493	9.8	150×10^{6}

Table 22 (Continued)
Summary of Operating Performances of Pumps

TYPICAL PUMP TYPE/STYLE	EFFICIENCY (%)	MAX PUMP TEMP (°F)	SOLIDS TOLERANCE	RELATIVE MAINTENANCE REQUIREMENT
CENTRIFUGAL:				
HORIZONTAL				
Single-stage overhung	20-80	851	MED-HIGH	LOW
Two-stage overhung	20-75	851	MED-HIGH	LOW
Single-stage overhung	30-90	401-851	MED-HIGH	LOW
Chemical	20-75	401	MED-HIGH	MEDIUM
Slurry	20-80	851	HIGH	HIGH
Canned	20-70	1004	LOW	LOW
Multi horiz split	65-90	401-500	MEDIUM	LOW
Multi barrel type	40-75	851	MEDIUM	LOW
VERTICAL				
Single-stage process	20-85	653	MEDIUM	LOW
Multistage	25-90	500	MEDIUM	MEDIUM
In-line	20-80	500	MEDIUM	LOW
High-Speed	10-50	500	LOW	MEDIUM
Sump	40-75	--	MED-HIGH	LOW
Multi deep well	30-75	401	MEDIUM	MEDIUM
AXIAL propeller	65-85	149	HIGH	LOW
TURBINE regenerative	55-85	248	MEDIUM	MED-HIGH
POSITIVE DISPLACEMENT RECIPROCATING				
Piston, plunger	55-85	554	MEDIUM	HIGH
Metering	~20	554	LOW	MEDIUM
Diaphragm	~20	500	LOW	HIGH
ROTARY				
Screw	50-80	500	MEDIUM	MEDIUM
Gear	50-80	653	MEDIUM	MEDIUM

vapor pockets reach the surface of the impeller, the local high fluid pressure will collapse them, causing noise, vibration, and possible structural damage to the pump. Applications which require high NPSH, such as feed pumps, may require booster pumps.

8.2.4 Discharge Conditions (Pump Selection). The characteristics of a pumping system express the relationship between flow rate Q and head H. Head is the sum of the geometric height, friction losses, valve losses and others. Once the flow rate and head have been determined, the designer can refer to the manufacturer's performance curve to select the proper curve.

8.2.5 Discharge Control. Discharge volume and pressure can be controlled by one or more of the following methods:

a) Modulated discharge control and valve throttling,

b) Variable speed control,

c) Multiple pumps.

Use modulated discharge when regulation is required and the horsepower decreases as the discharge is restricted. When using speed control, care should be taken that the head capacity curve not have a rising capacity characteristic at any speed on the performance curve. This could create a very unstable operating condition. Where process demand conditions vary widely, multiple pumps sized to meet demand requirements running at constant speed can be economically installed and operated.

8.2.6 Series and Parallel. Pumps connected in series will develop a head equal to the sum of the heads developed by each pump at any given flow. Pumps operating in series are referred to as pressure additive. Each pump must be selected to operate satisfactorily at the system design flow. Pumps connected in parallel will develop the equivalent head at each pump discharge and the system flow is divided among the pumps. Pumps operating in parallel are said to be flow additive.

8.2.7 Boiler Water Feed Pumps. Safety factor used in selection of boiler water feed pumps shall be 25 percent in capacity (for pump wear, blowdown requirements and excess boiler capacity available for short periods) and 15 to 25 percent for pressure. If pump discharges through an orifice, the additional flow required to prevent flashing shall be added to the pump capacity over the 25 percent safety factor.

(1) Pumps operating in parallel shall have similar head capacity curves and equal head at shut-off. Individual curves shall indicate continuously rising head characteristics from maximum to zero capacity. The curves at different speeds and those showing the required "net positive suction heads" (NPSH) are available from the pump manufacturers.

(2) Net Positive Suction Head (NPSH). To enable acceptable performance under all operating conditions of the boiler water feed pumps, the pressure at the pump suction must be sufficiently above the vapor pressure of the fluid being handled (corresponding to the saturation pressure of the fluid at the suction temperature) to prevent steam binding and cavitation which will destroy the pump impeller. Proper operation requires maintenance of a "net positive suction head above vapor pressure" (NPSH) at all times. NPSH is a function of suction head or lift, friction head and vapor pressure of liquid at suction temperature.

(a) Available NPSH

EQUATION:

$$NPSH = \frac{2.31(P_s - P_v)}{S.G.} + H_s - H_f \qquad (12)$$

where:

P_s = Pressure in suction vessel in psia at the prevailing altitudes.

P_v = Vapor pressure of pumped liquid in psia.

H_s = Static elevation in feet of the liquid surface above (+) or below (-) the centerline of the impeller.

H_f = Friction loss, in feet of liquid, in the suction line from the vessel to the pump suction flange.

S.G. = Specific gravity of the liquid at suction temperature.

(3) Conditions resulting in undue fluctuations in heater pressure and/or other sudden reductions in pump suction pressure may require injection of cold water into the pump suction to prevent flashing with resulting cavitation.

(4) Boiler feed pumps operating at or near shut-off are subject to damage due to overheating and possible seizure between the rotating and stationary parts, imbalance due to cavitation and other miscellaneous hydraulic forces. At complete shut-off the only fluid protecting the parts from damage is the amount contained in the casing which may be raised to a boiling temperature in minutes or even seconds. Provision must be made for adequate flow through the pump to prevent pump damage. This is accomplished by discharging a constant flow through an orifice or discharging of a controlled flow through an automatically controlled discharge bypass system or automatic flow control valve; this valve is located after the pump and discharges to a bypass recirculating line which discharges to the dearator heater or tank.

(a) Minimum Allowable Pump Suction Pressure.

EQUATION:

$$P_x = P_a + \frac{(NPSHa - NPSHs) \times S.G.}{2.31} \quad (13)$$

where:

P_a = Feedwater pressure (absolute) at pump suction, psia

P_x = Minimum feedwater pressure (absolute) at pump suction, PSIA, plus the difference between NPSHa and NPSHs.

NPSHa = NPSH available in feet of liquid of system at shut-off (Usually static suction head if water in heater is at its vapor pressure point.)

NPSHs = NPSH in feet of liquid required of pump at shut-off.

S.G. = Specific gravity of feedwater at pumping temperature.

(b) Maximum Allowable Temperature Rise Across the Pump:

EQUATION:

$$R = T_s - T_i \quad (14)$$

where:

R = Allowable temperature rise in degrees F. Generally limited to 15 degrees F (8.3 degrees C).

T_s = Temperature in degrees F corresponding to saturation temperature of P.

T_i = Temperature in degrees F of feedwater at inlet of pump.

Temperature rise and by-pass requirements to prevent damage to the pump due to cavitation are generally available from the manufacturer.

(c) Minimum Pump Flow

EQUATION:

$$Q = \frac{BHP \times 5.1}{R \times S.G. \times S} \quad (15)$$

where:

Q = By-pass capacity in gpm

BHP = Horsepower inlet at shut-off.

R = Maximum allowable temperature rise degrees F.

S = Specific heat of liquid.

S.G = Specific gravity of feedwater.

$$5.1 = \frac{42.42 \text{ Btu/Min./HP hour}}{8.33 \text{ Lbs./gal.}}$$

(d) Pump Horsepower Input:

EQUATION:

$$\text{Input HP} = \frac{Q \times TDH \times S.G.}{3960 \times E_p \times E_d} \qquad (16)$$

where:

Q = Gallons per minute.

TDH = Total dynamic head, feet.

S.G. = Specific gravity to 60 degrees F water.

E_p = Pump efficiency at specific point of operation.

E_d = Efficiency of motor or driver at same point of operation.

$$3960 = \frac{33000 \text{ ft. pounds per H.P. minute}}{8.33 \text{ lbs. per gallon}}$$

8.3 Fans

8.3.1 Types. The major boiler fans are the forced draft and induced draft fans which supply air for combustion of fuel and transport flue gases through the boiler. Additional fans provide pneumatic injection of fuel, recirculation of unburned carbon, gas recirculation, and forced overfire air. Numerous small fans are used for cooling and sealing of igniters, scanners and other equipment.

8.3.2 Pressurized Boilers. Boilers are either pressurized or have balanced draft for combustion. A pressurized boiler operates at above atmospheric pressure in the furnace. The forced draft fan supplies the air necessary for proper combustion in the furnace and will also provide a sufficient volume of air to compensate for leakage losses and sealing air requirements.

8.3.3 Balanced Draft Boilers. Balanced draft boilers are systems where forced draft fans supply air to the furnace and induced draft fans exhaust the products of combustion. The furnace is kept at a slightly negative pressure, 0.2 to 0.5 inches W.C., by the induced draft fan which is generally located downstream of the particulate removal system.

8.3.4 Forced Draft Fans. Forced draft (FD) fans operate with reasonably clean, cool or warm air. Forced draft fans should be designed for quietness,

efficiency, controllability and vibration free operation throughout the entire operating range. Backward inclined or backward curved single thickness blade centrifugal fans or variable pitch vane axial fans, are preferred. Inlets for the fans should have silencers with screens to attenuate entrance noises and prevent objects from entering the system.

The air flow rate shall be sufficient to provide the air required for proper combustion plus air leakage. The static pressure of the FD fan shall be calculated for the pressure drop through the inlet air duct, air heater, air metering device, dampers or vanes, air ducts, fuel bed, burners and any other resistance between the fan and the furnace. If there is not an induced draft fan, the forced draft fan must also provide sufficient static pressure for the furnace, stack effect and other losses. The volume of air to be provided is dependent on air pressure (elevation), air temperature and fuel. To assure that the fans will not limit a boiler's performance, margins of safety are added into the calculations for net fan requirement. The margins of safety are:

a) Coal fired: 20 percent excess volume, 32 percent excess pressure

b) Oil and gas fired: 10 to 15 percent excess volume, 20 to 25 percent excess pressure

c) 25 degrees F (13.9 degrees C) increase in temperature at the fan inlet.

8.3.5 Induced Draft Fans. Induced draft (ID) fans handle high temperature corrosive gas which may contain erosive ash. Erosion is controlled by using abrasion resistant material and limiting top speed. For coal firing, ID fans may be required to operate under variable temperatures due to load, bypass of baghouse and scubber. Temperatures can vary from 250 to 450 degrees F (121 to 232.3 degrees C) depending on operation. The bearings are usually water cooled and have radiation shields on the shaft between rotor and bearings to avoid overheating. The ID fans move the air from the furnace, through the heat recovery equipment, ductwork, pollution control equipment, and stack. Corrosion must be considered if temperatures of flue gas are within 30 degrees F (16.7 degrees C) of dewpoint. ID fans are designed with approximately the same factor of safety as FD fans.

8.3.6 Fan Selection. The method of establishing characteristics for FD and ID fans in a balanced draft system is described in para. 8.3.6.1 and 8.3.6.2.

8.3.6.1 Forced Draft Fan. (Refer to "Steam" p. 17-10.)

EQUATION: $W_a = T_{ac} + Ea + L_a = T_n r$ (17)

$T_{nr} + W_s m = W_b r$

where:

W_a = Weight of air to be handled by fan, lb/hr
T_{ac} = Theoretical air for combustion
E_a = Excess air required at burner
L_a = Leakage in air heater
T_{nr} = Total net requirement
W_{sm} = proper safety margin
W_{br} = Total test block requirement

EQUATION: $P_s = P_f r$ (18)

$P_{fr} + P_s m = P_{bp}$

where:

P_s = Static pressure at fan discharge, inches of water
P_{fr} = Total air-resistance, fan to furnace
Psm = Add proper safety margin
P_{bp} = Total test block pressure

EQUATION: T_a + 25 degrees F (13.9 degrees C) = $T_t b$ (19)

where:

T_a = Temperature of air, degrees F
T_{tb} = Total test block temperature

8.3.6.2 Induced Draft Fan

a) Weight of gas to be handled by fan, lb/hr = Total net requirement = Theoretical air for combustion + Excess air required at burner + Fuel burned (assume no ash) + Infiltration + Leakage in air heater.
Add proper safety margin = Total test block requirement.

b) Draft to be provided by fan, inches of water = Total net draft requirement.
Add proper safety margin = Total test block pressure

c) Temperature of air, degrees F
Net temp. + 25 degrees F (13.9 degrees C) = Total test block temperature.

8.3.7 Fan Control Methods. Selection of fan controls is a balance of engineering and economic factors. The manufacturer's fan curves must be supplied for each fan.

a) Dampers. Dampers are used on fan discharge to raise system resistance and raise operating points higher on the fan curves. Input power

decreases on decreased volume output and fan efficiency increases. Dampers are closed during the startup of the boiler to reduce starting load on the motor.

b) Variable inlet vanes. These are used to change characteristic curves of forced draft fans by providing swirl to the fan impeller. Variable inlet vanes are slightly more effective in saving power than parallel blade inlet box dampers. When furnishing variable inlet vanes for either centrifugal of fixed-pitch axial fans, fan manufacturers provide a complete performance envelope showing the effect of vane position on fan performance and power. With fixed speed motors, power only slightly diminishes as air volume is reduced. This system operates economically if air volume is 75 percent or above the design volume.

c) Two-speed motor drive. A centrifugal fan maintains its highest level of efficiency at high loads. As the load drops the dampers close and fan efficiency drops off rapidly. Two speed motors allow the fan to operate at overall high efficiency with the dampers open at two running speeds. The two speed motor is less expensive and easier to control than variable speed drives.

Variable-speed motor drive. A variable speed gives an infinite series of fan curves from which the points of highest system efficiency can be chosen. A variable speed system significantly improves fan efficiency during periods when the boiler is operating at less than its maximum load.

8.3.8 Additional Information. Fans and their usage are discussed in Combustion Engineering Inc. Combustion/Fossil Power Systems, (1981), Chapter 15.

8.3.9 Fan Drives. Fans are generally driven by either electric motor or steam turbine. A steam turbine may be used when plant heat balance permits and the exhaust steam is used for feedwater, space heating, or process. Dual drive may be found necessary in the case of boiler startup.

8.4 Motors

8.4.1 Selection. Motors shall be selected for the maximum duty required by the driven machine under most severe anticipated operating conditions. Consider selection of high efficiency motors if service conditions can be met and such motors are economically justified. For variable speed drive, compatible controls must be available.

Power supply shall be designed to meet motor requirements under all load conditions. Low voltage on A.C. induction motors results in the following variations in design factors:

a) Increased slip,

b) Decreased torque,

c) Decreased efficiency,

d) Increased power factor.

The reverse effect may be expected with voltage above normal. Other design criteria such as frequency, voltage regulations, etc., further affect performance and must be coordinated with the primary power supply.

The designer shall obtain suppliers data on final motor selection for the following:

a) Maximum load torques,

b) Starting, pull-up and breakdown torques greater than the respective torque values of the load speed-torque curves,

c) Accelerating capacity to meet maximum allowable time to come to speed,

d) Maximum starts per hour to protect motor winding,

e) Motor efficiencies at various speeds and loads for multispeed and variable speed motors,

f) Requirements for explosion-proof, dustproof or waterproof installations.

8.5 Economizers

8.5.1 General. Economizers use the relatively low temperature flue gas leaving the boiler to heat the feedwater entering the boiler. Economizers will increase boiler efficiency by approximately 1 percent for every 10 degrees F (5.6 degrees C) increase in feedwater temperature or for a 40 degree F (22.2 degrees C) reduction in exit gas temperature.

8.5.2 Applications. Economizers may be furnished as an integral part of the steam generator, as an accessory in the flue gas system of the original installation or as a subsequent retrofit item. Economizers are not practically applied to HTW boilers because of the low flue gas exit temperatures. When applicable to steam generators consideration must be given to all factors affecting design. These considerations include:

a) Type of fuel and sulfur content. The dew point and rate of corrosion increase as the sulfur content increases. See Figure 37.

b) Operating pressure and temperature. The flue gas temperature must be higher than the steam temperature in a boiling tank for heat transfer to take place. Therefore economizers are better suited for high pressure

boilers. The higher the operating pressure the higher the flue gas temperature leaving the boiler. Economizers are not practical below 50 psig (345 kPa) steam pressure.

c) Control of both feedwater and gas temperatures leaving the economizer at varying loads.

d) Type of heating surface. Tube diameters commonly range from 1.75 to 2.75 inch O.D. Normally, bare tube or cast-iron-covered tube are provided for coal or high sulfur oil. Finned tubes can be used for natural gas, No. 2 fuel oil, gas or low-sulfur No. 6 oil.

8.5.3 Design Considerations. Minimum feedwater and metal temperatures vary according to the percent sulfur content of the fuel. Flue gas temperatures must be maintained above the acid dewpoint to prevent condensate and corrosion (see Figure 37). Feedwater temperature must be held at least 50 to 75 degrees F (27.8 to 41.7 degrees C) below that of the boiler saturated temperature to prevent steaming in the economizer.

8.5.4 Economizer Corrosion Controls. Under conditions where a sulfur-bearing fuel is being fired and the feedwater is not of sufficient temperature, a Feedwater Preheat System is to be incorporated into the economizer design and become part of the installed package. The Feedwater Preheat System is to be capable of elevating the inlet feedwater temperature to the minimum required inlet temperature. The system is also to be capable of controlling the exit stack gas temperature by the elevation of feedwater temperature. The system shall be operational during all boiler loads. The system shall consist of the following components: feedwater preheater, feedwater control valve with feedwater temperature sensing device, and stack gas control valve with gas temperature sensing device.

8.5.5 Heat Balance and Fuel Savings. Economizers will affect the overall plant heat balance and require careful evaluation in its application. Economic analysis and heat balance should be made to determine whether to omit the economizer and heat the feedwater with exhaust steam and/or to install an air preheater. Where economizers are installed as accessory or retrofit items in the flue gas system, the recovered heat may be calculated and expressed as an increase in overall steam generator efficiency and further evaluated.

8.5.6 Accessories. Include the following accessories and equipment for each economizer.

a) If sootblowers are required, economizer shall be designed with tube spacing and depths of banks suited for cleaning with sootblowers. The external surface may be cleaned with the same type of equipment used to clean boiler surfaces.

b) Temperature and pressure indicators on feedwater outlet.

c) Temperature and pressure indicators on feedwater inlet.

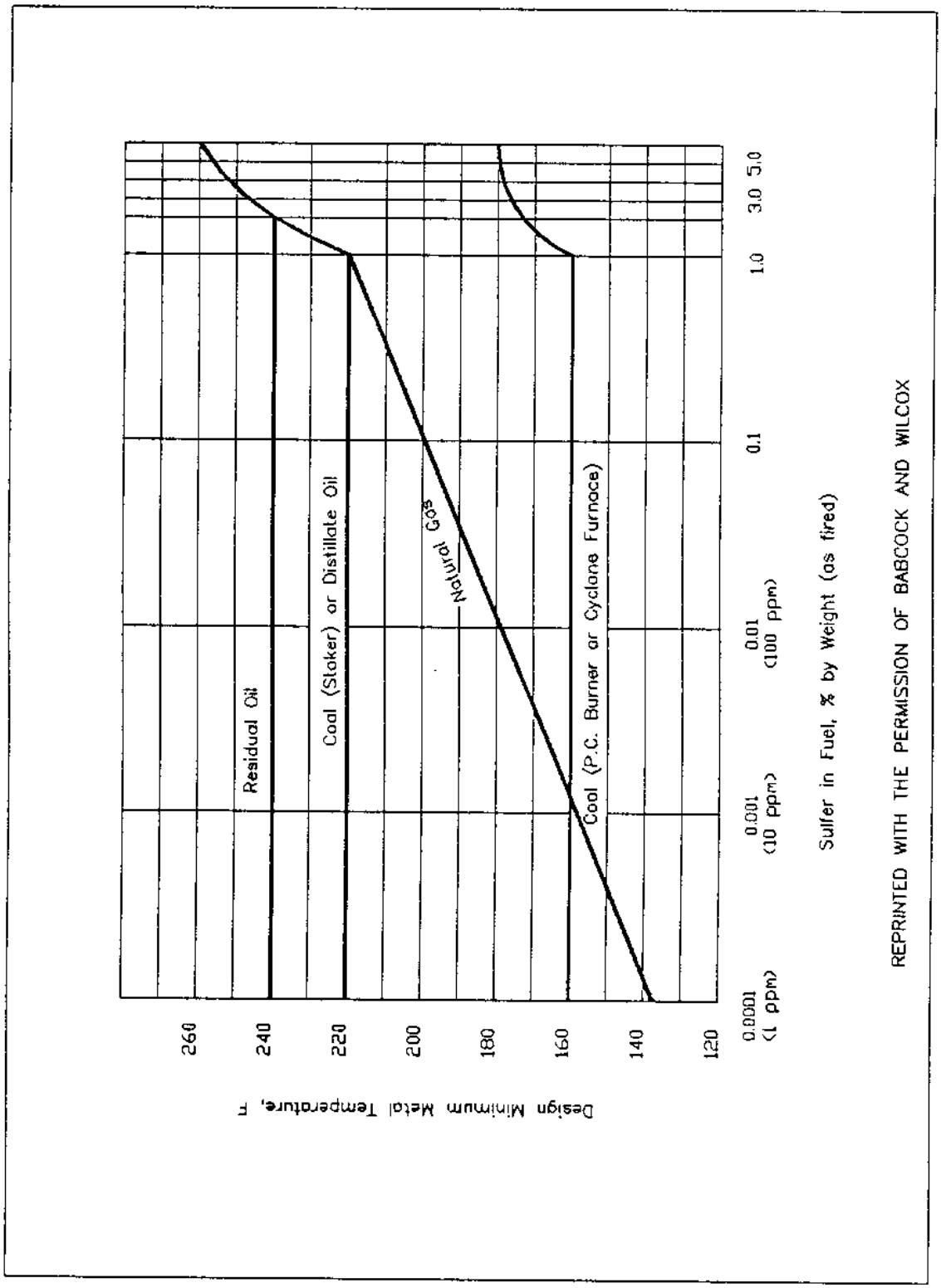

Figure 37
Minimum Metal Tempreature for Economizers an Air Heaters

Figure 37
Minimum Metal Temperature for Economizers and Air Heaters

d) Temperature and pressure indicators on flue gas outlet.

e) Temperature and pressure indicators on flue gas inlet.

f) Manual shutoff and bypass piping control valving for low load operation.

g) Low point drain on boiler feedwater with drain valves.

h) Means to wash down the economizer when the unit is taken out of service.

i) Drainage for washdown water in gas ducts.

j) Access doors for cleaning and observation.

k) Feedwater heater for startup or low load operation. Feedwater coils can be located in the mud drum for preheating water at low loads.

l) Flyash hoppers.

8.6 Air Heaters

8.6.1 General. Air heaters are installed to recover waste heat leaving the boiler or economizer and add the heat to incoming combustion air.

8.6.2 Application. Condensing type air preheaters should be used if economically justifiable, otherwise the minimum flue gas temperature exiting the heater must be controlled so that the metal temperatures are kept above the dew points of the gases. See Figure 37 for minimum metal temperatures for heaters. Depending on the fuel used and method of firing the nominal lower limit for flue gas would be between 300 to 350 degrees F (149 to 177 degrees C). The higher limit of the preheated air may range up to 600 degrees F (315 degrees C). In cases of high steam pressure and/or high flue gas temperature, sufficient heat may remain in the flue gas after an economizer to warrant both the installation of an economizer and an air heater. In all cases however, the high and low limits as well as the overall plant heat balance must be taken into consideration.

8.6.3 Design Considerations. The size of air heater to install is based on engineering and economic considerations. The increase in efficiency is balanced against the original cost of the air heater, the cost of additional fan power to overcome increased draft losses, and operating and maintenance costs of the fans. The efficiency increases approximately 1 percent for a 40 degrees F (22.2 degrees C) decrease in outlet gas temperature or for a 50 degrees F (27.8 degrees C) increase in combustion air inlet temperature. An air heater not only increases the efficiency of the boiler at all loads, it also permits a reduction in the physical size of the boiler.

8.6.4 Classification. Air heaters are classified as either recuperative or regenerative. Recuperative air heaters pass heat through a heat exchanger directly from one side of the surface to the other. Recuperative air heaters are generally of the tubular or plate type. Regenerative air heaters use heat from the hot gasses to heat a heat storage medium then use the heated medium to heat the incoming combustion air.

8.6.5 Corrosion. The tube metal temperatures must stay above the temperatures indicated in Figure 37. The tube metal temperatures may be controlled by one of the following methods.

a) Recirculate a portion of the preheated air from the air heater outlet to the inlet of the forced draft fan.

b) Bypass a portion of the air around the air heater which will reduce flow through the air heater and allow the metal temperature to increase.

c) Use a steam coil located in the air duct prior to the inlet of the air heater.

d) Use corrosion resistant materials or material coating.

e) The temperature of combustion air discharge from the air heater should not exceed the limits listed below:

1) Stoker fired units for coal or weed chips can generally accommodate temperatures up to 350 degrees F (177 degrees C).

2) Pulverized coal fired units may utilize temperatures up to 600 degrees F (315 degrees C) for drying the fuel as well as additional combustion efficiency.

8.7 Stacks

8.7.1 General. Some of the factors to consider in stack design are:

a) Flue gas conditions; i.e., erosive and corrosive constituents, dew point temperature, maximum temperatures if bypassing economizer or air preheater.

b) Temperature restrictions (related to stack lining materials and construction).

c) Corrosion Resistance. Stack and/or lining material must be selected to withstand corrosive gases and condensed acids (related to sulfur in the fuel).

d) Loadings. Wind, earthquake and dead (including moment load from deflection).

e) Reaction Forces. After structural adequacy has been determined, both static and dynamic analyses should be made of the loads.

f) Vibration Effects. A steady wind can produce large deflections of welded steel stacks due to Karmen Vortices phenomenon. If the frequency of these pulsations is near the stacks' natural frequency, severe deflections can result due to resonance.

g) Emissions Dispersion. Plant location, adjacent structures, and terrain affect stack design. Consult 40 CFR 51, Chapter 1, GEP (Good Engineering Practice) Methods of Determining Stack Height, Dispersion Techniques, and Restraints on Stack Design.

h) Stack Accessories. Cleanout doors, OSHA-approved climbing devices including ladder and painter trolleys, EPA flue gas testing ports and platforms, lightning protection and aviation warning lights as required shall be supplied.

i) Stack Height Limitations if near Airfield. The stack may be necked down to increase the discharge velocity but this will also add additional flow resistance which must be overcome with mechanical means.

j) Stack Construction. Stack height and diameter, support, corrosion, and economic factors dictate type of construction. Stack manufacturers must be consulted. Static and dynamic structural analyses must be made of the wind, earthquake, dead, and thermal loads. Vortex shedding of wind loads must be considered to be assured that destructive natural-frequency harmonics are not built into the stack.

Stacks are generally made of concrete or steel because of the high cost of radial brick construction. If stack gases are positively pressurized, or if flue gases will be at or below the dew point of the gases, corrosion resistant linings must be provided; linings must be able to withstand temperature excursions which may be experienced in the flue gas if flue gas scrubbers are bypassed.

Stacks of steel or concrete construction shall be insulated to avoid condensation and smut formations when the internal surfaces may drop below 250 degrees F (121 degrees C). This requirement does not apply when scrubbers are used with low temperature discharge (150 to 180 degrees F (65.6 to 82.2 degrees C)) into the stack because the flue gas is already below dew point temperature.

A truncated cone at the top of the stack will decrease cold air downdrafts at the periphery of the stack and will help maintain stack temperature, but stack draft will also decrease considerably.

8.7.2 Stack Design. The stack height calculations are for the effective stack height rather than the actual height; this is the distance from the top of the stack to the centerline of the opening of the stack where the flue gas enters. Air and gas flow losses through the inlet air duct, air heater (air side), windbox, furnace and passes, air heater (gas side) or economizer, gas cleanup equipment and other losses through duct and breaching should be plotted and overcome with the fans. The kinetic discharge head, the friction losses at the entrance to the stack, and friction losses in the stack should be provided by the natural draft of the stack. Barometric pressures adjusted for altitude and temperature must be considered in determining air pressures. The following stack design parameters must be determined.

a) Extreme and average temperatures of ambient air and gas entering stack.

b) Heat losses in stack (to find mean stack temperature).

c) Altitude and barometric corrections for specific volume.

d) Gas weight to be handled. (Consider infiltration of air into casing and ductwork as well as combustion air.)

e) Stack draft losses due to fluid friction in the stack and kinetic energy of gases leaving stack.

f) Minimum stack height to satisfy dispersion requirements of gas emissions.

g) Economical stack diameter.

h) Stack height for required draft. (Where scrubbers are used, the temperature may be too low for sufficient buoyancy to overcome the stacks internal pressure losses and provide adequate dispersion of flue gas into the atmosphere.)

8.7.3 Example Stack Calculations. Items a) through i) regarding stack calculations were taken from The Babcock & Wilcox Company (1978), chapter 17.

a) Preliminary Selection: For convenience in making a tentative selection of optimum stack dimensions, for sea level and 80 degrees F (26.7 degrees C), the necessary data are given graphically in Figure 38, Figure 39, Figure 40, and Figure 41. The use of these graphs to establish stack dimensions is illustrated by the following examples:

b) General Data:

Type of Firing	Approx. Gas Weight lb/lb of Steam
Oil or Gas	1.15
Pulverized Coal	1.25
Stoker	1.50

Example Stack Calculations:

GIVEN:

Fuel	Pulverized Coal
Steam generated, lb/hr	360,000
Stack gas flow, lb./hr.	450,000
Stack inlet gas temp., degrees F	550
Stack exit gas temp. (assumed), degrees F	450
Stack draft required (from point of balance to stack gas entrance), in. of water	1.0
Altitude of plant	Sea level

c) Diameter. Enter graph, Figure 38, with a stack gas flow of 450,000 lb/hr (56.7 kg/s). This will give a stack diameter (to nearest 6 inch increment) of 14 ft 6 inch (4.42 m).

d) Height (approximate). Enter graph, Figure 39,, with a required stack draft of 1 inch W.G. and an average gas temperature of (550 + 450)/2 = 500 degrees F (260 degrees C). This will give an approximate stack height of 160 ft (48.8 m).

e) Exit Gas Temperature, Figure 40. An approximate stack height of 160 ft (48.8 m) and a diameter of 14 ft 6 inch (4.42 m) will result in a stack exit temperature of 436 degrees F (224.4 degrees C), and an average stack temperature of (550 + 436)/2 = 493 degrees F (256 degrees C).

FIND: Find the economical dimensions of the stack. Diameter of stack to nearest 6 inch increment in feet; active height of stack in feet; stack exit gas temperature, degrees F; total height of stack in feet.

f) Height (actual). Enter graph, Figure 39, with the stack draft required increased by 10 percent as a safety factor; and using the average stack temperature of 493 degrees F (256 degrees C), determine a new stack height based on zero stack flow loss = 177 ft (53.95 m). For a stack flow loss taken at the usual arbitrary value of 5 percent, the final actual stack height = 177/0.95 = 186 ft (56.7 m). This is the active height above flue entrance, to which must be added any inactive section required from foundation to flue entrance.

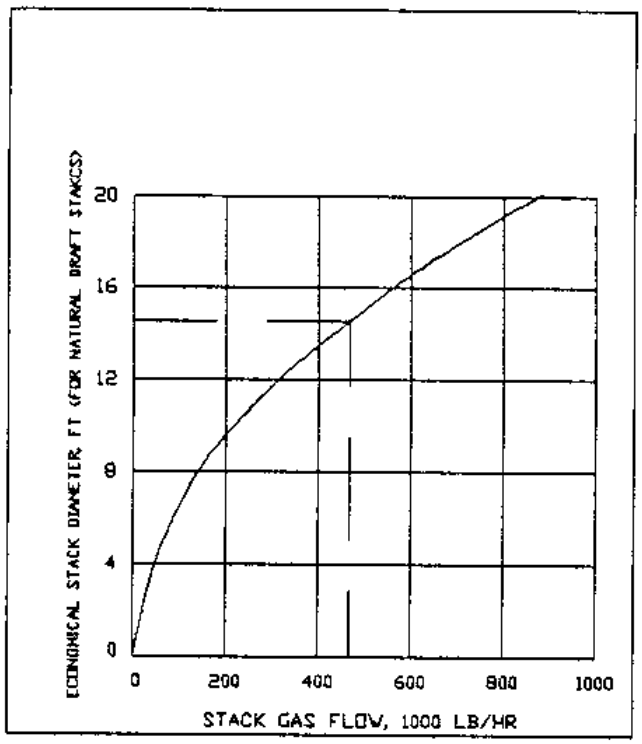

Figure 38
Economical Stack Diameter
for a Range of Gas Flows

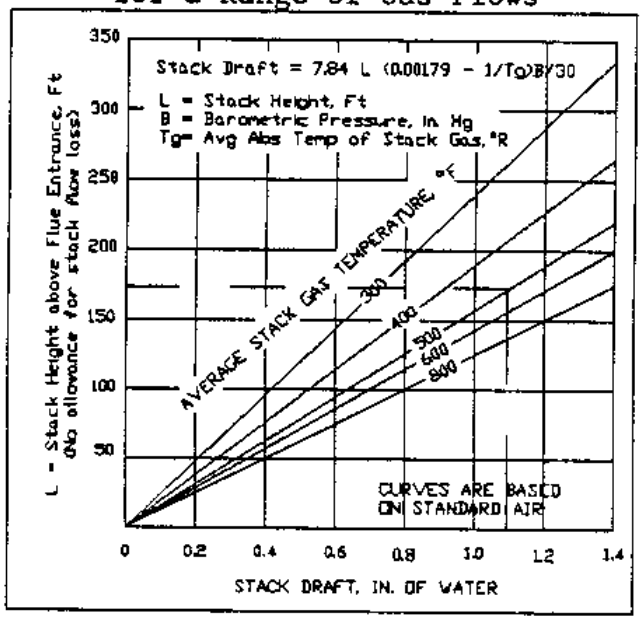

Figure 39
Stack Height

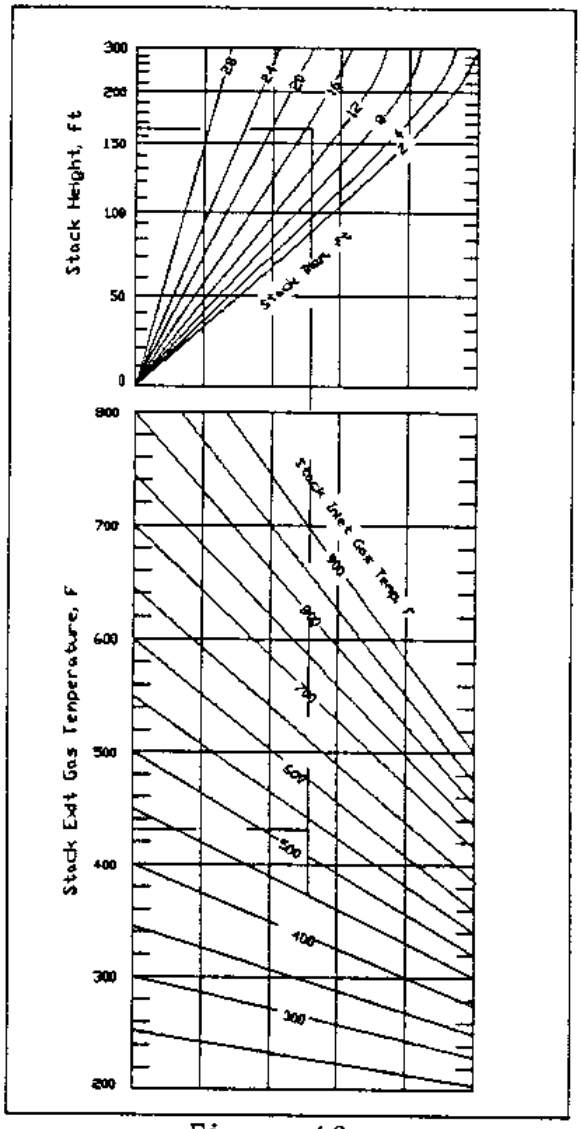

Figure 40
Relationship Between Stack
Temperature and Dimensions

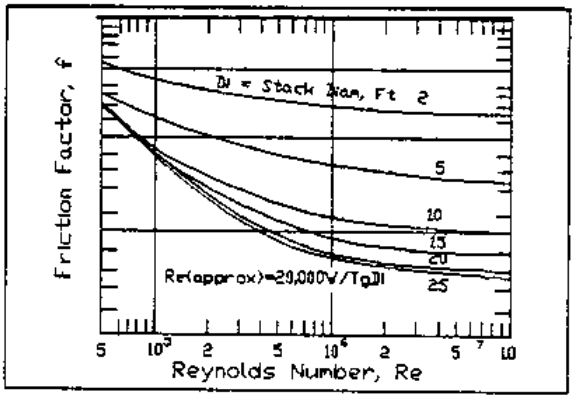

Figure 41
Friction Factor as
Related to Reynolds Number

g) Stack Draft Loss. The stack draft loss may be checked by using the above values for diameter, height, average gas temperature and gas flow in Equation 20 below. A check of the net draft available by using Equations 20 and 21 below indicates that the 1-inch draft loss should be about 5 percent of the available draft and the diameter as the dominating factor in this loss may be modified as necessary to suit this condition.

EQUATION: Stack draft loss = $[0.0942T_g/D_i4]\ [1+(fL/D_i)]\ [w/100,000]_2$ (20)

where:

Stack draft loss is measured in inches of water
w = weight flow of gases, lb/hr
D_i = internal diameter of stack, ft
L = height of stack above gas entrance, ft
f = friction factor from Figure 41, Friction Factor, F, as related to Reynolds Number and Stack Diameter, for use in Equation (12)
T_g = average gas absolute temp. degrees R = degrees F + 460

h) Stack Draft

EQUATION: $$\text{Stack draft} = 0.256Lp\ (1/T_a - 1/T_g) \quad (21)$$

where:

L = stack height above gas entrance, ft
p = atmospheric pressure in inches of mercury
T_a = temperature (absolute) of outside air, deg. R = deg. F + 460
T_g = average temperature (absolute) of stack gases, deg. R = deg. F + 460

i) If the plant is not located at sea level, the stack draft required should be increased by the altitude factor, approximately 30/B, where B equals the normal barometer reading, in inches of mercury at the boiler site.

8.7.4 Ducts and Breechings. Cold air ducts shall be designed for velocity of 2000 to 2500 fpm and hot air ducts 3000 to 3500 fpm. Breeching for flue gas shall be designed for a velocity of 3500 to 4000 fpm. Flue gas (dirty) must not be less than 2000 fpm to avoid settling out of particulate. In calculating draft losses from flow, use ASHRAE HE-83, Equipment Handbook.

8.8 Compressed Air System

8.8.1 Types of Air Compressors. Air compressors are divided into two general classifications.

a) Positive displacement type which includes reciprocating as well as rotary action.

b) Dynamic type in which the air is compressed by the mechanical action of rotating impellers or vanes.

Both types are available in either single-stage or multi-stage.

8.8.2 Applications and Requirement. Compressed air is divided into two categories, plant air and instrument air.

8.8.2.1 Plant Air. Plant air is compressed to 125 psig (863 kPa) and is maintained in the 90 psig (621 kPa) to 125 psig (863 kPa) range. It can be used for the following:

a) Fuel oil atomizing at pressures from a few inches of water to 30 psig (207 kPa) or above. Demand must be confirmed with burner manufacturers. Refer to paragraph 5.2.3 in this handbook.

b) Soot blowing. Normal design pressure for heating plants would be 100 to 120 psig (690 to 828 kPa). Demand should be confirmed by boiler manufacturers or soot blower manufacturers.

c) Baghouse pulse-jet cleaning,

d) Pollution-control equipment,

e) Ash-silo fluidizing stones,

f) Tube expander,

g) Tools and miscellaneous usage,

h) Controls and valve actuators.

8.8.2.2 Instrument Air. Instrument air is air compressed in an oil free compressor or a compressor with a minimum of oil carry-over to a pressure of 100 psig (690 kPa), dried to a dew point temperature not higher than 35 degrees F (1.7 degrees C) for indoor applications. The dew point at line pressure shall be at least 18 degrees F (10 degrees C) below the minimum ambient air temperature in the plant. For outdoor air lines the dew point at line pressure shall be at least 18 degrees F (10 degrees C) below the minimum recorded temperature at the plant site (see ANSI/ISA 57.3, Quality Standard for Instrument Air, and NAVFAC DM-3.05, Compressed Air and Vacuum Systems, Section 3). Outdoor pneumatic instruments should not be used in extremely cold regions.

8.8.3 System Components. Refer to NAVFAC DM-3.05, Section 4.

a) Two or more compressors sized so that with one compressor off line, the remaining compressors can handle 100 percent of the plant and instrument compressed air requirements. The compressors should be sized so

that one compressor is 100 percent loaded 50 percent of the time. The motor, or other driver, shall be sized so that it cannot be overloaded. Provide unloading devices and/or other controls to reduce power consumption.

b) Intercoolers are required for two stage compression. After-coolers are required at discharge. A receiver with an automatic water trap shall be provided after the aftercooler.

c) Air driers and oil-moisture separators are required on instrument air to prevent malfunctions of instruments. An air drier should be considered on plant air if there is a possibility of moisture freezing in the lines and blocking the air flow. An oil-moisture separator shall be placed upstream of each outlet or usage point.

d) Intake filter-silencer on each compressor inlet or intake. Compressor inlet air should be taken from outside air. The intake should be at least 6 ft (1.52 m) above the ground and adequately protected from the rain. Do not locate the inlet in areas where air pressure pulsations may occur. Intake pipe shall not be less than full size of compressor inlet and possibly larger if excessive length of pipe gives unacceptable pressure drop.

e) Emergency cross connection with moisture-oil separator between plant air and instrument air.

f) Temporary connections, hoses and screwed joints shall be minimized to reduce possible leakage.

8.8.4 Leakage. Design at least 10 percent additional capacity into the system for leakage. An empirical rule of thumb is that 25 horsepower is required to compress 100 square feet (9.29 square meters) of air at standard conditions to 100 psig (690 kPa). Air at standard conditions weighs 0.075 pounds per cubic foot (1.21 kg per cubic meter). Because of the high cost of air leakage, shut-off valves shall be provided at branches to permit maintenance shut-down of individual usages of compressed air.

A check on the amount of total leakage throughout system may be done by observing what portion of the air compressor capacity is required to maintain pressure when no air-consuming equipment is in service.

8.9 Steam Traps

8.9.1 Types. There are three major classifications of steam traps: mechanical, thermostatic, and thermodynamic. Their functions can sometimes be mixed to create a combination steam trap.

8.9.1.1 Mechanical. A mechanical steam trap operates using the density difference of condensate and steam. Steam will travel above the condensate flowing along the bottom of any container. An increase of condensate results in a rise of the liquid level of condensate. As the level rises, a mechanism

allows the condensate to be discharged. As condensate is discharged and the level drops, the mechanism closes the discharge path. Some examples of mechanical traps include a float trap and an inverted bucket trap.

8.9.1.2 Thermostatic. A thermostatic trap uses temperature differences to discharge condensate and air. Since steam contains more heat energy than condensate, its heat controls the actual operation of the trap. As condensate and air enter the trap, they are discharged through a port. When steam enters, heat energy expands different materials, which closes off the condensate flow. Thermostatic traps are very useful during start-up. One type of trap, a bimetallic trap, uses two types of metals in its design. Some types of thermostatic traps use bellows filled with liquid, or a thermal expansion element.

8.9.1.3 Thermodynamic. A thermodynamic steam trap uses kinetic energy differences between flowing steam and condensate. As steam flows through an orifice, its velocity will be much greater than that of condensate. There will also be a pressure drop between the steam and condensate flow. Some types of thermodynamic steam traps are the piston impulse trap and the disk trap.

8.9.2 Applications. The condensate level controls the float trap. The float trap is capable of lifting condensate to a higher discharge level. The venting of air and non-condensables in thermostatic traps make them useful with unit heaters, radiators, and convertors where condensate flow is gravity controlled. Inverted bucket traps are used on low pressure systems. Impulse and thermodynamic traps are useful for steam tracing of pipe lines where there will be continuous flow. Additional guidance for the application and selection of steam traps may be found in MIL-HDBK-1003/8, and Federal Specification WW-T-696, Steam Traps, and Naval Civil Engineering Laboratory UG-0005, Steam Trap Users Guide.

8.9.3 Selection and Sizeing. A steam trap must be: the right size, the correct type, in the best location, and properly installed to serve the system most efficiently. The wrong trap can reduce equipment efficiency by 35 percent. When selecting a trap consider the following: type of service, rate and range of load, system temperature and pressure, operational conditions, and economical conditions. Manufacturers' recommendations are also useful when selecting steam traps.

Determining the correct size steam trap requires calculating or estimating the maximum condensate load (lb/hr). Both the minimum and maximum inlet pressure at the trap, and the outlet back pressure must be determined. Consult manufacturers' capacity tables when sizing the type of trap. Safety factors, influenced by the operational characteristics of the trap, are also selected from manufacturers' literature.

8.10 Controls. MIL-HDBK-1003/12 provides design criteria required for plant controls.

8.10.1 Types of Systems Available.

a) On-Off controls,

b) Single point positioning system,

c) Parallel positioning system,

d) Parallel metering system,

e) Parallel metering system with oxygen trim,

f) Steam flow/air flow metering system.

8.10.2 General Rules. The following general rules apply for determining control system type to effect maximum energy conservation. Combustion units larger than 5,000,000 Btu/hr (5 270 000 kJ/hr) input should have metering combustion controls. Investigate energy savings. Combustion units larger than 24,000,000 Btu/hr (7 034 kW) input should have oxygen trim to optimize fuel usage. CO trim should be considered for larger boiler installations as an adjunct to oxygen trim for increased efficiency, especially for coal firing.

8.11 Variable Speed Drives

8.11.1 General. Variable speed drives can improve the operational efficiency of: boiler forced draft fans, boiler induced draft fans and boiler feedwater pumps at reduced loads. They conserve energy, electricity and reduce real and reactive demand charges.

8.11.2 Multispeed Motor Drives

8.11.2.1 Two-speed Motor Drives. The dual speed is usually accomplished by pole-changing motors or two winding motors. The pole-changing motor may be used at 2:1 speed ratios. For other ratios such as 3:2 or 4:3, the two winding motor is necessary. The fast speed drives the fan to meet maximum boiler requirements. The slower speeds are for the reduced load requirements. Fan control for intermediate loads is accomplished by vanes and dampers.

8.11.2.2 Wound-Rotor Motors. Wound-rotor motors have AC motors which utilize slip rings and an adjustable impedance rotor to vary motor speed. The speed of a wound-rotor motor is changed by changing the rotor or secondary impedance. An increase in the rotor impedance reduces motor speed by increasing rotor slip. The motor continues to draw full input power; the excess power draw is lost as heat. Slip energy recovery packages can be furnished to recover up to about 60 percent of the slip losses. This type of speed control is generally not used because of its poor efficiencies. The motors are not well suited for continuous operation at reduced speed.

8.11.3 Variable Speed Drives

8.11.3.1 Variable Frequency and Conventional Motor Drive. Normal alternating current (AC) is rectified to supply direct current (DC) to an electrical inverter. The inverter converts power from DC to controlled frequency AC to supply a conventional motor drive. The speed of the motor conforms to the synchronous frequency of the AC supply. The motor speed is controlled by adjusting supply frequency. This type of speed control of AC motors is accurate and relatively simple. The rectification and inverter equipment is solid state. If problems arise in the frequency control system, the motor can be run directly on the supply AC at a slightly reduced speed. The initial starting surge of current (600 to 700 percent of full load power) can be reduced with the variable speed drive to about 30 percent of full load power. Cooling air must be provided with the frequency control device when hot air is used and tempering heaters should be included when cold outside air is used.

8.11.3.2 Steam Turbine Drives. A single stage steam turbine drive is usually economical if exhaust steam can be used in the plant.

8.11.3.3 Internal Combustion Engine Drive. When this type of drive is used, a heat recovery unit will increase the efficiency.

8.11.3.4 Conventional Motor Drive with Hydraulic Coupling or Magnetic Coupling (Eddy Current). The motor runs at near synchronous speed and the drive speed is controlled by changing the clutch slip. Hydraulic and magnetic couplings have a wide range of speed reduction but normally have a slip-range of 2 to 5 percent. The energy loss in the "slip" is referred to as speed loss of the driven machine. The slip loss is included in the horsepower of the driven unit. The slip expels heat which requires cooling in the larger units. These methods are not energy efficient. Speed control for large motors is generally accomplished more accurately, efficiently and economically with other methods. For smaller motors, eddy-current efficiency is better for controlling speed on driven equipment. Eddy-current drives are less efficient than variable frequency but they cost less and are simpler to repair.

8.11.3.5 Direct Current Power Supply and Drive Motor. Normal alternating current (AC) is rectified to supply direct current (DC) to a DC motor drive. Speed control of DC motors is accurate and relatively simple. Equipment is solid state or silicon control rectifier (SCR). Speed usually varies directly with system input power factors. The DC motors are not recommended for hazardous locations and may be difficult to maintain in dirty or corrosive environments.

8.11.3.6 Mechanical Variable Speed Drives. These drives are generally below 50 horsepower. They control speed with V-belt drives, pulleys, gear reducers or other variations of mechanical shifting of belts chains and clutches. They are very high maintenance items and are suited to intermittent service.

V-belt drives may used where a drive efficiency of approximately 95 percent and a moderate amount of maintenance and replacement is acceptable.

8.11.4 Application. Variable- or two-speed drives should be used when they will increase overall plant efficiencies and save money. Generally variable speed drives on fans over 10 HP (7.46 kW) and boiler feed pumps, over 7 1/2 HP (5.6 kW) will be cost effective. The benefits of variable speed drives are:

a) Reduced starting current,

b) Longer pump seal life,

c) Reduced impeller wear (on induced draft fans),

d) Higher system efficiency,

e) Less vibration and noise.

8.11.5 Considerations. The following should be considered when specifying variable speed drives.

a) Variation of load, minimum to maximum,

b) Speed variation required for maximum to minimum service,

c) Overall efficiency of the train of components selected over the range of the load,

d) Initial cost of drive versus potential savings.

Section 9: PERFORMANCE

9.1 Boiler Inspection. A boiler will not be accepted for operation until it has passed an inspection and provided an operating certificate by an inspector certified by the National Board of Boiler and Pressure Vessel Inspectors (NBBI) or by the Naval Facilities Engineering Command.

Cleaning and Starting Boiler and Feedwater System. Allow 48 to 72 hours for boilout. Boilout, cleaning and starting procedures shall be in accord with the requirements of ASME Boiler and Pressure Vessel Code, Section 7 and Factory Mutual Engineering Research Corporation (FM), Boilers and Pressure Vessels, 12-40. Lubricate equipment, dry out motors, check alignments.

The contractor shall provide the services of a boiler inspector who holds an active commission issued by the NBBI to certify the boilers prior to acceptance by the ROICC. The boiler inspector shall have a Certificate of Competency and shall be licensed by the Boiler Inspector Licensing Board of the EFD responsible for the design.

9.2 Strength and Tightness Tests. A hydrostatic test shall be conducted on all water side boiler components. The test is performed at 150 percent of design pressure once installation is completed. Other fluid piping, fittings, and accessories will be tested with the operating fluid at 150 percent of design pressure. Gas piping and ducting shall be bubble tested at positive pressures of 150 percent of design pressure. The boiler casing, ducting, heat recovery and pollution control equipment shall be pressurized and smoke tested.

9.3 Plant Operational Tests. These tests will verify all mechanical and electrical systems function properly. The tests will require operating each boiler, all plant auxiliaries, and any related plant equipment. All annunciators will be tested by operating the monitored variable at the annunciator limit.

9.4 Varying Load Combustion Tests. The thermal generating equipment will be operated throughout the capacity range for a period of five days without a malfunction or a violation of Federal, state or local emissions regulations. Identical control settings and conditions shall repeat controlled variables within 5 percent of the variables range. The controls repeatability will be checked at each of the steady state combustion test loads. The load at the repeatability check will be provided by first testing minimum load, increasing to 40 percent, 70 percent, and 100 percent load, and then decreasing load and checking variables at 70 percent, 40 percent and minimum load.

9.5 Steady State Combustion Tests. Capacity and Efficiency Tests (ASME, Power Test Code (PTC) 4.1, Steam Generating Units) shall be conducted at 100 percent, 70 percent, 50 percent and minimum load. Efficiency tests

shall be conducted in accordance with the heat loss method procedures outlined in the ASME PTC-4.1. The thermal generating equipment shall perform at efficiencies greater than or equal to the manufacturer's performance guarantee. The documented results will include:

a) Control settings,

b) Boiler display, recorder, and gauge readings,

c) Readings required by ASME power test code,

d) Graphs of Boiler load Vs. Efficiency, Boiler load Vs. Excess Air, Boiler load Vs. (Stack - Combustion Air Temperature),

e) Any information useful for future reference.

9.6 Emissions Tests. Plant emissions shall be tested for compliance with applicable Federal, state and local regulations and statutes. Consult with the applicable regulating authority or authorities for applicable compliance requirements.

Section 10: MISCELLANEOUS

10.1 Insulation. Insulation shall be non-asbestos composition. Apply insulation to conserve energy, provide comfort, and ensure safety. Thickness of insulation is primarily an economic comparison for energy conservation. This is done by comparing the value of heat lost through insulation to the cost of additional thickness over the expected life of the insulation. In areas where a reliable fuel supply is questionable, insulation may be increased.

10.1.1 Boiler Casing. The exterior casing temperature of shop assembled and field erected boilers shall not exceed 150 degrees F (83.3 degrees C) under the following design conditions:

a) Boiler operating at maximum rated capacity,

b) Ambient temperature of 100 degrees F (37.8 degrees C),

c) Air velocity of 2 ft/sec (0.61 m).

The above casing temperature is a factor in the guaranteed plant efficiency at various operating loads. Lower casing temperatures may be required when justified economically.

Brick-set, firebox or other field insulated units shall be covered with a metal finish to protect the insulation. Outside casing temperature shall not exceed that specified for shop assembled and field erected units. Additional insulation may be used if justified economically.

10.1.2 Piping

10.1.2.1 Hot Water Piping. Hot water piping, above 150 degrees F (65.6 degrees C), shall be insulated for safety and conservation of energy. Refer to MIL-STD-101B, Color Code for Pipelines for Compressed Gas Cylinders, table 2 for piping color code of different temperature piping.

10.1.2.2 Steam and Hot Condensate Piping. This piping shall be insulated for safety, area comfort, and conservation of energy. Additional insulation may be used if justified economically.

10.1.2.3 Location. All piping inside the plant building shall be above ground or in covered accessible trenches. This handbook does not cover exterior distribution piping. Exterior distribution piping requirements for utility steam, HTW, CHW, natural gas, and compressed air systems are provided in MIL-HDBK-1003/8. Piping of no. 4 to no. 6 fuel oil and other liquids shall be heat traced and insulated. No. 6 fuel oil lines shall be insulated to maintain pumping temperatures.

10.1.3 Storage Tanks. Heated, above-ground, fuel oil tanks should be insulated with a minimum of 1-1/2 inches of insulation and protected with an exterior metal jacket.

Deaerators, condensate receivers, heat exchangers, and like equipment shall be insulated for safety and optimum conservation of energy.

10.1.4 Breeching and Ducts. Flue gas breeching, regenerative type air preheaters, economizers, and other exposed equipment between the boiler flue gas exit and the stack shall be insulated.

Steel stacks shall be insulated in the annular space between shells or on the outside. The insulation shall maintain the flue gas and inside steel stack temperature above dewpoint. The exterior of the stack shall be at a safe temperature.

Forced draft, overfire, underfire, and hot combustion air supply duct shall be insulated.

10.2 Piping. For pipe sizes and engineering, refer to MIL-HDBK-1003/8.

10.3 Boiler Air Infiltration. Minimize boiler air infiltration. Ensure a good fit and tight seal at mechanical joints, hopper doors, furnace and pollution control system access and observation ports, etc. Air infiltration directly affects boiler efficiency. Air leakage into the furnace causes incomplete combustion, gives false excess oxygen values, and cools exit flue gas temperatures. The results of air infiltration into the furnace are:

a) Incomplete combustion which wastes fuel and money.

b) False excess oxygen readings. Boiler will be put into hazardous operating condition if operator adjusts for this incorrect reading.

c) Increased air flow increasing draft loss and fan power requirements, and decreasing fan and stack capacity.

d) Lowered flue gas exit temperatures.

e) Affected performance of the economizer and air preheater.

f) False boiler operating efficiencies.

g) Affected flue gas dew point.

10.4 Soot Blowing. Efficiency, capacity, and draft loss of a boiler installation depend on the condition of the heat transfer surface. For this reason, soot blowers are provided in boilers, economizers, and air preheaters. There are two types of soot blowers, air and steam. Soot blowers remove accumulated deposits of soot, fly ash and slag from heat transfer surfaces. They are also used to prevent fly ash from plugging equipment and air passages. Materials and construction of soot blowers shall be in accordance with the operating temperature of the furnace or equipment in which they are placed.

10.4.2 Fuel Considerations. Soot blowers shall be provided on boilers burning solid fuels or heavy oils. They may be required when firing no. 2 fuel oil. Gas-fired boilers do not require soot blowing equipment because gas is a clean burning fuel. Consult with the boiler and soot blower manufacturer for specific design requirements.

10.4.3 Spreader Stoker Boilers. The heating surface of a spreader stoker boiler is generally cleaner than other types of fired boilers. This is due to scrubbing action of cinders and fines carried along in the flue gas. To avoid a sand blasting effect on tube wall surface, due to high velocity cinders and fines, minimize the soot blower's blowing time.

10.4.4 Medium (Compressed Air or Steam). Steam or compressed air can be used for soot blowing. The designer should determine the most cost effective medium. Operational costs of the soot blowers depend on utility costs.

10.4.4.1 Air-Puff Soot Blowers. An air-puff soot blower operational cost will be competitive with steam and it may have a lower first cost. The air-puff soot blower has a smoother cleaning curve. When evaluating steam and compressed air soot blowers, take into consideration the air requirements and the plant air capacity. Include, in the cost evaluation, the cost to increase the plant compressed air system to meet the additional load of the air-puff soot blower system.

Air-puff soot blowers dislodge less soot and other matter during each cycle. Air-puff soot blowers help reduce stack emissions due to overloading the dust collectors. Small puffs provide more stable boiler operating conditions and reduce fluctuations in furnace draft experienced with multiple blowers.

Compressed Air Usage: Air flow through each blower nozzle can be calculated by an approximate formula (Baumeister, et. al. 1978)

EQUATION: $$m = 0.53(ACP)/\sqrt{T} \qquad (22)$$

where:

m = discharge in lbs/sec
A = area of orifice in ft^2
C = coefficient of discharge
P = upstream pressure in lbs/in^2 absolute
T = upstream temperature in deg R

Example: A 100,000 lbs/hr steam boiler equipped with compressed air soot blowers requires the following amount of air:

Parameter Typical Value

diameter of nozzle	5/16 in.
time per blow	1.0 to 1.5 sec.
blows per blowing arc	23
blowers per boiler	5 (blr), 2 (economizer)
nozzle type	sharp-edge (C=0.61)
upstream pressure	100 psig (690 kPa)
air temperature	120 degrees F (49 degrees C)
air density @ 120 ◦F	0.0037 lbm/ft^3.

Using mean values, the air consumption per cleaning cycle would be:

$$m = \frac{0.53 \times (B \times (5/16)^2)/(4 \times 144) \times 0.61 \times (100+14.7)}{(120+460)^{1/2}}$$

m = 0.118 lb/sec
V = (0.118/0.0037) = 31.83 cfs
31.83 cfs x 1.25 sec x 23 blows x 7 blowers = 6,406 ft^3 per cycle

10.4.4.2 Steam Soot Blowers. Steam flow through each blower nozzle can be calculated by an approximate formula for saturated steam prepared by Napier (Baumeister, et. al. 1978)

EQUATION: $m = PA/70$ (23)

where:

m = discharge flow in lbs/sec
A = area of orifice in in^2
P = upstream pressure in lbs/in^2 absolute

Example: Calculated steam requirements for 100,000 lbs/hr steam boiler equipped with steam soot blowers and having the following parameters:

Parameter Typical Value

diameter of nozzle	5/16 in
time per blow	15 to 25 sec
blowers per boiler	5 (blr), 2 (economizer)
nozzle type	sharp-edge (C=0.61)
stream pressure	100 psig (690 kPa)

Using mean values and substituting into equation 23, the steam consumption per cleaning cycle would be:

$$m = PA/70$$

$$m = \frac{(100+14.7) \times (B \times (5/16)^2/4)}{70} = 0.126 \text{ lbs/sec}$$

steam requirements = 0.126 lbs/sec x 20 sec x 7 blowers = 17.6 lbs/cycle

Use the following rule of thumb when estimating steam requirements (by weight) for steam soot blowing systems. For coal fired boilers use two percent of the units generated steam. Both dry air and dry steam can use a blowing pressure of 120 psig (828 kPa). The minimum allowable operating pressure is 80 psig (552 kPa) and the maximum allowable pressure (for power boilers) is 300 psig (1 725 kPa). The soot blower manufacturer will determine the blowing pressure required for the fuel, boiler design, and firing conditions.

Where an economizer or air preheater is involved care must be taken to avoid lowering flue gas temperature below the dew point. Moisture in steam or air will form deposits in the economizer or preheater. Do not use steam soot blowers in HTW boilers.

10.4.5 Operation

10.4.5.1 Steam Soot Blowers. Valving shall be provided to allow draining of the supply steam lines prior to operating soot blower. Steam traps shall be installed at low points in the soot blowing supply line to eliminate condensate build up. This is necessary to assure no condensate has accumulated in the soot blower prior to blowing. A shut off valve shall be provided at each soot blower.

10.4.5.2 Air Soot Blowers. Do not run supply air piping in a way that allows oil pockets to accumulate at or near soot blowers. Mixing of oxygen and oil may cause an explosion in a hot boiler when soot blowers are operated.

10.4.6 Controls

10.4.6.1 Shop Assembled Boilers. On shop assembled boilers, and field-erected boilers, of less than 200,000 lbs/hr (25.2 kg/s), soot blowers shall be locally operated with local push-button stations for individual soot blowers.

10.4.6.2 Field-Erected Boilers. On field-erected boilers greater than 200,000 lbs/hr (25.2 kg/s), the soot blowing system shall be an automatically programmable control system. This system will automatically start and stop each soot blower in a programmable sequence, monitor, and identify operating soot blower. This control system will be centrally located in the central control room or operator's control station. Local and remote manual override control will permit manual start-stop operation of soot blowers. Local control shall have highest priority.

10.4.7 Piping Connections for Boiler Maintenance. The boiler, economizer, and air preheater are periodically washed down with high pressure hot water. Soot blowers are often used for the wash down. A high pressure (pumped) water connection shall be provided to the soot blowing manifold. A shut off/isolation and check valve shall be placed upstream of the tie-in point to protect the system. The high pressure water connection shall allow easy hookup of the high pressure water system.

10.5 Fly Ash Reinjection on Coal-Fired Units (Cinder Return)

10.5.1 Advantages. Collection and reinjection into the furnace of cinders carried over with fly ash may increase fuel consumption efficiency by 3 to 5 percent. Actual savings are doubtful because of operating difficulties, increased maintenance and electrical power consumption. Collection equipment shall be from the rear convection pass, economizer hopper, and air heater hopper.

10.5.2 Disadvantages

a) Increased maintenance of fans, dust collectors and reinjection piping because of the abrasive nature of dust.

b) Increased flyash loading of fines in baghouse.

c) Health hazard. (The flue gas fines are so small they make the dust carcinogenic.)

d) EPA claims the dust is so fine it goes right through the pollution control devices.

e) Tube erosion is increased because of additional fines in flue gas.

f) Interface with combustion. Reinjection of cinders can cause slagging and clinker formation.

10.5.3 Operation. Economizer hoppers and air heater hoppers collect about 5 percent of the flyash. The cinders from these hoppers contain an unburned carbon which may be reinjected into the furnace for combustion. Cinders from low efficiency collectors also contain unburned carbon and may also be reinjected for combustion. Cinders from high efficiency collectors should not be used because of excessive fines.

Cinders are collected in hoppers and fed directly into a high pressure air stream and blown into the furnace. The high pressure blower supplies air to both the cinder return system and the over-fire air jets. To prevent ash buildup in the convection section, ash must be continually removed and reinjected into the furnace.

10.6 Corrosion Protection. Corrosion is the disintegration of a metal by one or more of the following causes:

a) Electrochemical (galvanic) -- Two dissimilar metals or portions of a metallic substance immersed in an electrolyte or ionized medium (such as water, soil, or chemical solution) will cause an electric current with a stream of electrons flowing from a relatively positively-charged metal (anode) to the relatively negatively-charged metal (cathode). As a result, metal ions will go into solution. Refer to MIL HDBK 1004/10, Cathodic Protection, for more detail.

b) Differential Environments -- Metals will corrode when immersed in substances having different concentrations or ions (such as different soils).

c) Stray Currents -- Small electric currents may stray from sources of direct current and cause corrosion of metals in their paths.

d) Chemical Attack -- The basic action is electrochemical, but the attack on metals is uniform rather than localized.

e) Microbiological (tuberculation) -- This causes deterioration of metals as a result of metabolic activities of micro-organisms.

f) Atmospheric -- Corrosion of metals exposed to high humidity (over 70 percent) and high concentrations of sulfur dioxide, carbon dioxide, and salt in air.

g) Stress, Distortion, and Fatigue -- Such attributes or conditions do not start corrosion but will accelerate it. Highly strained areas tend to become anodic to remainder of system. Proper design and selection of suitable materials is the solution.

10.6.1 Control Methods. Use one of the following methods for corrosion control:

10.6.1.1 Inorganic Materials. In corrosive environments and transporting corrosive solutions consider non-metal conduits or:

a) Reinforced concrete pipe.

b) Fiberglass reinforced pipe.

c) Polyvinyl chloride pipe.

d) Determine inorganic material limitations such as pressure, temperature, and concentrations of corrosive liquid.

10.6.1.2 Plastics. Synthetic organic materials are subject to:

a) Temperature limits.

b) Expansion characteristics.

c) Acceptable jointing capability.

d) Approval by NAVFACENGCOM, Code 04.

10.6.1.3 Passive Metals. Metals which are resistive to their environments, such as:

a) Copper and its alloys, except in alkaline conditions.

b) Aluminum and its alloys, except in areas affected by sea water, brackish water containing sea water or within 3 miles (4.83 km) of sea coast.

c) Lead and its alloys. Lead is seldom used due to possibility of lead poisoning.

d) Zinc-coated materials.

e) Cast iron alloys; austentitic gray, high silicon, iron-chromium-nickel, ni-resist, ductile.

f) Stainless steels.

g) Hastelloys. Expensive and should only be used in justifiable applications.

h) Monel.

i) Columbium.

j) Zirconium.

k) Titanium.

10.6.1.4 Metal Protection. Ferrous metals are not stable in most environments; they must be protected by isolating them from their environments. Refer to Table 23 for applicable protective coatings for corrosion control. Internal coatings of tanks and exterior coating of buried tanks are not subject to this table. Interior coatings of tanks should suit

the liquids and temperature of the liquids. Exterior of buried tanks should be coated with a protective coating such as fiberglass resins or coal tar epoxy.

Cathodic protection is recommended to reduce or prevent corrosion of underground metallic structures or pipe. By using sacrificial anodes or impressing potentials on the metallic structures or pipe makes them cathodic throughout with respect to the surrounding soil (electrolyte). See MIL-HDBK-1004/10.

10.6.1.5 Change of Environment. Surroundings may be changed by any of the following methods:

a) Water treatment; Refer to para.7.1.1

b) Deaeration; Refer to Table 17

c) Inhibitors. These substances retard corrosion by increasing the polarization rate at either an anode or cathode metal or both. They can also build up electrical resistance films in the conduction paths between anodes and cathodes. Refer to Table 24 for inorganic corrosion inhibitors. Sample organic inhibitors are glucosates, amines, phenyl-hydrazines, and similar items.

d) Soil alteration. Replace corrosive soils with sand or selected soils, or change its characteristics by adequate drainage.

10.7 Water Supply

10.7.1 Plant Water Requirements. Raw water makeup shall be sized to satisfy all plant water requirements including plant water treatment, backwash, ash handling equipment, flue gas scrubbers, and other usage. Other areas to consider include:

a) Cooling water for pump stuffing boxes, water cooled air compressors and aftercoolers, water sampling coils, and blowoff pits.

b) Air washer and dust dampener for ash handling. Protect against freezing.

c) Flue gas desulfurization system.

d) Domestic hot and cold water.

e) Hose bibbs for washdown and other usages in plant and tunnels.

f) Fire protection.

Table 23
Preferred Generic Protective Coatings for Corrosion Control

Equipment	Generic Primer	Generic Finish
Ash Handling:		
Structural - Less than 300 ◦F	IZ	E/p
Hopper - Less than 1000 ◦F	S.Al	S.Al
Bucket Elevators:		
Structural	IZ	-
Equipment	-	CTE, E/p
Car Dumpers, Hoppers	-	CTE, E/p
Silos, Feeders	-	E/p
Precipitators		
Interior, 500 - 1000 ◦F	S.Al	S.Al
Exterior:		
pH 5-9, Less than 300 ◦F	AL	AL
pH 5, Less than 150 ◦F	V	V
Pulverizers	E/p	E/p
Scrubbers, Gas chute	E/p	AU
Exterior Surface	Alk	AL
Stack Gas Treatment		
less than 250 ◦F	E/p	AU
less than 750 ◦F	IZ	-
Sootblowers / Smokestacks		
500 - 1000 ◦F	S.Al	S.Al
Fuel Terminal Facilities		
Car dumpers and Oil Transfer		
Equipment	-	CTE
Boilers:		
Insulated Surfaces 300 ◦F	Alk	AL
Demineralizer	E/p	E/p

Table 23 (Continued)
Preferred Generic Protective Coatings for Corrosion Control

Equipment	Generic Primer	Generic Finish
Maintenance, 250 ◦F Max:		
Elevators, fans, filter housings,		
heat exchangers, motors, piping	Alk	AL
Pipe hangers, floor hatches		
& covers, ladders, mono-rail,		
piping (interior / exterior	E/p	E/p
250 ◦F max.)		
Pumps:		
less than 250 ◦F	Alk	Alk
less than 400 ◦F	HR.Al	HR.Al
500 - 1000 ◦F	S.Al	S.Al
Immersion less than 150 ◦F	-	CTE
Splash / Spillage	ChR	ChR
Switchgear Cabinets	AU	AU
Tanks (chemical, water, and fuel)	Alk	SAlk
Fuel, lube, oil	E/p	AU
Condensate water	AL	AL
Chemical:		
Acid	V	V
Alkalai	E/p	E/p
Turbines	E/p	AU
	Alk	AL
Valves & operators	E/p	E/p
Control panels	E/p, AU	AU
Transformers, circuit breakers:		
Corrosive	E/p	E/p
Light / Atmospheric	Alk	SAlk
Cooling towers, splash zone	-	CTE
Concrete	-	CTE
Steel	IZ	V

Table 23 (Continued)
Preferred Generic Protective Coatings for Corrosion Control

Equipment	Generic Primer	Generic Finish
Masonry:		
Concrete block, poured precast brick		
Interior	SBL	E/p, AL
Exterior	SBL	AL
Floors	E/p	E/p
Steel, interior/exterior:		
Structural	IZ	E/p
Severe Corrosion Service	E/p	E/p
Moderate Corrosion Service	IZ, Alk	AL
Light Atmospheric Service	Alk	Alk
Decks / siding:		
Carbon steel	IZ	E/p
Galvanized	VW	E/p
Roof Interior, galvanized & factory finished:		
Ferrous surfaces	Alk	AL
Other	AL	AL
Siding interior/exterior		Alk, AL
Carbon Steel	AL	AL
Galvanized	AL	-
Substation support	CR.Al	CR.Al
Security Fencing	Alk	AL
Washdown stations		
Concrete, steel		E/p

Symbol key:

AL	= Acrylic Latex	IZ	= Organic Zinc
AU	= Aliphatic Urethane	SBL	= Styrene Butadiene Latex
Alk	= Alkyd	SAlk	= Silicone Alkyd
ChR	= Chlorinated Rubber	S.Al	= Silicone Aluminum
CR.Al	= Corrosion Resistant Aluminum	V	= Vinyl
CTE	= Coal Tar Epoxy	VAL	= Vinyl Acrylic Latex
E/p	= Epoxy Polyamide	VW	= Vinyl wash
HR.Al	= Heat Resistant Aluminum		

Source: Excerpted from Windler, E.J., Coatings for Power Plants, Power Engineering, 1980

Table 24
Inorganic Inhibitors and Corrosion Systems

Inhibitor	Concentration %	Corrosive Environment	Metallic System
Glassy phosphates	Small Amount	Water Systems	Steel
Potassium dichromate	0.052-0.2	Tap water	Iron-brass
Potassium dihydrogen phosphate + sodium nitrite	+5.0	Sea water	Steel
Potassium permanganate	0.10	0.30% NaOH solution	Aluminum
Sodium benzoate	0.5	0.03% NaCl solution	Mild steel
Sodium carbonate	Small amount	Gas-condensate wells	Iron
Sodium chromate	0.5	Cooling water	Electrical rectifier sys
Sodium chromate	0.07	$CaCl_2$ brine	Copper-brass
Sodium dichromate	0.025	Air Conditioner water	A C Equip.
Sodium dichromate +sodium nitrite	0.1 + 0.5	Water	Heat Exchangers
Sodium hexametaphosphate	0.002	Water about pH 6	lead
Sodium metaphosphate	Small amount	Ammonia	Mild - steel condenser
Sodium nitrite	0.005	Water distilled water mixtures	Mild - steel
Sodium orthophosphate	1.0	Water pH 7.25	Iron
Sodium silicate alloys	Small amount	Sea water	Zn, An-Al

10.7.2 Plant Water Losses

a) Continuous blowdown and/or intermittent blowoff loss.

b) Intermittent sootblowing. About 1 percent of the steam generated is used during sootblowing for oil firing; about 2 percent for coal firing.

c) Steam trap and receiver losses account for 1 to 3 percent of generated steam.

d) Contaminated condensate from fuel oil heaters.

e) Steam for steam-atomizing oil burners. About 1 to 7 percent of generated steam is required for atomizing.

10.7.3 Protection. Provide backflow preventer upstream of water treatment, ash handling equipment, flue gas desulfurization system and hose bibbs.

10.8 Heating and Ventilating. Additional information may be obtained from NAVFAC DM-3.03, Heating, Ventilating, Air Conditioning, and Dehumidifying Systems.

10.8.1 Heating Boiler Rooms. Heat boiler plants centrally by steam, low temperature hot water, or medium temperature hot water, using unit heaters, convectors, finned-tube radiation or fan coil units. Circulate hot ceiling air to colder floor areas or boiler room. Do not consider heating contribution from the boiler or associated equipment.

10.8.2 Ventilating Boiler Rooms. Provide adequate forced ventilation in all areas to:

a) Minimize heat buildup in equipment areas,

b) Remove airborne dust from solid fuel handling areas,

c) Remove moisture buildup in wet areas,

d) Remove noxious odors and vapors,

e) Provide reasonable comfort.

10.8.2.1 Maximum Temperature and Air Changes. The maximum temperature should be limited to 104 degrees F (40 degrees C) if practicable. A maximum practicable limit on forced ventilation is 30 to 60 air changes per hour. Included in areas to be ventilated, unless otherwise air conditioned, are:

a) Conveyer galleries,

b) Boiler room,

c) Offices,

d) Equipment installation and repair areas,

e) Pump wells,

f) Tunnels,

g) Toilets and washrooms,

h) Locker rooms,

i) Lunch rooms,

j) Other areas where personnel are expected to work or maintain equipment.

When temperatures are expected to exceed 104 degrees F (40 degrees C), the upper operating limits of all equipment must be carefully analyzed.

10.8.2.2 Combustion Air Inlets. In large indoor heating plants combustion air inlet shall be taken below the plant ceiling. Preheat of the outside air shall be as required to avoid excessively low temperatures in the air preheaters or to the boilers. If excessive air is drawn from the plant, operator discomfort and possible freezing of piping may occur.

10.8.2.3 Equipment. Roof ventilators and/or fans must be multiple speed and thermostatically controlled. These types of units are most effective in maintaining desired conditions with the least consumption of energy. A motorized damper shall close when fan is not operating.

10.8.2.4 Design. Provide means to circulate stratified heat collecting near the ceiling to lower levels.

Construction of the building and boiler setting affect building air infiltration. Considerable energy can be saved by limiting air infiltration beyond normal ventilating requirements. The building shall be oriented, constructed, and weatherproofed to minimize air infiltration. The stack effect due to density differences between air at different temperatures should be minimized in winter.

10.9 Drainage. Drains which may be contaminated by coal or oil shall be equipped with separators to separate the contaminates from drainage before discharging to the sewer. Provide drains and connect to sanitary sewer for:

a) Pump bases.

b) Cooling water from pump stuffing boxes.

c) Sample coolers.

d) Aftercoolers.

e) Turbine bearings and other water cooled equipment.

f) Blowoff pit overflows contaminated with chemicals. (Pretreatment may be necessary to meet requirements of regulations in force.)

g) Water pockets in breechings or induced draft fan housings.

h) Deaerator.

i) Condensate fans.

j) Overflows from gravity water tanks.

k) Air washer for ash handling systems (acid contaminated). Water from air washer shall be piped to clarifier or decanting tank specifically designed to remove ash which shall be trucked to a suitable disposal site and sluice water treated and recycled.

l) Miscellaneous boiler drains from water gages, safety valve drip pans, etc.

m) Floor cleaning including toilet room and sink.

n) Coal storage, car thawing, conveyer tunnels. Drainage to be piped to proper containment for separating and treatment.

o) Water treatment facility.

10.9.1 Diked Areas. Provide valved drains and connect to storm water drainage system for diked areas for above ground oil storage. Slab inside dike shall be sloped to drain. Provide valved drains outside dike with freeze protection around valve. Provisions shall be included to prevent groundwater contamination. The state environmental protection agency may require an oil-water separator although the reliability of the oil water separators functioning to remove all oil traces is questionable. The most positive spill protection is a shut valve which is open after any oil sheen is removed from the entrapped water.

10.10 Architectural Criteria

10.10.1 Outdoor and Indoor Steam Plants. In freezing climates, the boilers and auxiliaries shall be installed in heated enclosures. Where climate is mild and reasonably dry, an open-air installation with adequate personnel protection may be provided. In all cases, aesthetics as well as economics

must be considered in determining costs. The savings of an open plant installation will be appreciable to an indoor plant. Maintenance cost will increase considerably because of equipment and surface exposed to weather.

10.10.2 Handicapped. Construction of room access and toilet facilities shall satisfy the requirements for the physically handicapped.

10.10.3 Openings. Provide openings or doorways for passage of the largest equipment units. Make openings for ventilation louvers, breechings, and piping where necessary. Fire doors and/or fire shutters may be required.

10.10.4 Elevator. Provide a freight elevator in multiple floor installations.

10.10.5 Outside Fuel Storage. Grade, drain, and surface fuel storage areas. Do not use cinder-base surfaces under coal storage.

10.10.6 Personnel and Parking. Furnish necessary shower room, toilet room facilities and lockers for operating personnel for both sexes in buildings. The plant shall contain a sampling laboratory space, storage area, small repair area, control room (in larger plants), generator room, lunch room, compressor room, chemical storage area, and office space for supervisors and clerks. Provide parking spaces for plant personnel and visitors near the boiler plant.

10.10.7 Equipment Rooms. Room size shall provide adequate space for equipment installation, maintenance, and removal. Allow a minimum of 4 ft (1.22 m) aisle space between equipment, if feasible. Allow a minimum of 8 ft (2.44 m) of clearance between boilers with a maximum generating capacity greater than 60,000 lb/hr (7.56 kg/s). Size rooms to allow for planned future expansion. Construct equipment rooms with double door openings and steel supports for chain hoists to allow for equipment removal. Provide adequate ventilation and heating and consider equipment noise level when designing the rooms.

10.10.8 Paint Finish. Plant interior walls and tunnels shall be painted with a durable paint which will permit hose-down or scrubbing of areas.

10.11 Structural Criteria. For data on structural criteria, refer to para. 10.1.1 through para. 10.1.4. Structural items include but are not limited to:

a) Platforms,

b) Hoists,

c) Boiler foundation,

d) Stack,

e) Piping.

10.11.1 Platforms. Platforms shall be provided as follows:

a) To provide access for operation and maintenance of all equipment and valves more than 8'-0" above the floor.

b) At burner and burner controls which are not accessible from grade.

c) At both ends of the convection section for maintenance purposes.

d) At damper and sootblower locations for maintenance purposes.

e) At all observation doors and ports.

f) At auxiliary equipment such as fans, drivers, and air preheaters for operating purposes.

Platforms shall have a minimum clear width as follows:

a) Operating platforms - 3'-0"

b) Maintenance platforms - 4'-0"

c) Walkways - 2'-0"

d) A safety gate shall be provided for all ladders serving platforms or landings.

e) See, Safety Protection this Section.

10.11.2 Hoists. Refer to para. 10.12.

10.11.3 Boiler Foundations

a) Provide independent foundations, where necessary, to avoid cracking floor slabs resulting from thermal expansion.

b) Provide expansion joints around perimeter of foundations.

c) Separate building structural steel from boiler structural steel.

d) Do not support building floors, platforms, stairs, etc., by boiler structural steel.

10.11.4 Special Considerations. For wind and seismic loads, mechanical piping and equipment and related systems shall be anchored, braced, or guyed (as required) to satisfy seismic zone requirements and withstand minimum expected wind velocity including gusts for the location of the installation. Designs for construction, installation, and anchorage shall give special attention to ensure minimum damage. Seismic design shall be in accordance with NAVFAC P-355, Seismic Design for Buildings. In the computation earthquake forces for a building, its components and all equipment, the importance factor "I" shall be 1.5. Piping connections must be so made as to preclude rupture under the most adverse conditions expected. Pipe supports shall be close coupled to supporting structures when the more severe seismic conditions are expected.

Protect against corrosion as a result of moisture and acids caused by down wind drafts around cooling towers, evaporative condensers, and boiler stacks. Avoid bare aluminum within two miles (3.2 km) of salt water.

Support ductwork, flue gas breeching, stacks, diesel engine silencers, stacks, and other hot equipment so that contraction and expansion will not impose detrimental loads and stresses on related structures.

Stacks shall be designed as follows:

a) Stack foundations shall totally support the stack and prevent wind and seismic disturbances from collapsing or over turning the structure.

b) Take into consideration wind effects at various elevations.

c) Take into consideration vortexing effects and natural frequencies (harmonics) of the stack(s).

d) Protect top of stack lining against water penetration between stack shell plate and lining.

e) Seal all openings and connections on stacks, breechings, and ducts to prevent air or flue gas leakage.

f) Stacks, breechings, and ducts, mounted on concrete shall be designed to prevent temperatures in excess of 300 degrees F (149 degrees C) contacting concrete.

g) Connections between stacks and flue gas ducts shall not be welded.

h) Stacks with floors shall be provided with a minimum 2-inch size drain.

i) Breeching shall have a minimum clear distance beyond the last present and future convection row of 2 ft - 6 in. (0.762 m) for access and flue gas distribution.

Structural steel shall be provided to adequately support all mechanical piping and electrical conduit. Provision shall be made to accommodate expansion, contraction and drainage requirements of the pipe.

10.12 Safety Protection

10.12.1 OSHA Requirements. All Federal installations must comply with 29 CFR 1910, Chapter XVII, Occupational Safety and Health Act of 1970. Safety requirements including those not covered under this law, should be the latest, most stringent standards and practices followed by industrial organizations. Special attention shall be given to platforms, railings, occupational noise exposure, means of egress, safety signs, color code and markings, fire protection, safety relief and control valves.

10.12.2 Personnel Safety

10.12.2.1 Platforms and Stairs. Provide access platforms for operation and maintenance of all equipment and valves more than 8'-O" above the floor level. Provide handrails and toe guards on platforms and floor openings. Toe guards shall be 2 inches high. Stairs shall be provided, where possible, in lieu of ladders. Landings shall be provided when stair run is in excess of 12 feet (3.66 m). Platforms and stairs shall be constructed with abrasive treads or nosing and preferably, closed risers.

10.12.2.2 Exits. Not less than two exits shall be provided from catwalks, platforms longer than 10 to 15 feet (3.05 to 4.57 m), boiler aisles, floor levels and the boiler plant. Emergency lighting shall be provided for all modes of egress.

10.12.2.3 Hoists. Provide hoists and supports for maintenance on pumps, compressors, fans and other heavy equipment. Provide a beam into the plant and steel above an opening between floors to hoist large equipment to an upper level.

10.12.2.4 Obstruction to Air Navigation. For data on obstruction to air navigation refer to MIL-HDBK-1023/1, Airfield Lighting, and NAVAIR 51-50 AAA-2, General Requirements for Airfield Marking and Lighting.

10.13 Fire Protection. See MIL HDBK 1008/A, Fire Protection for Facilities Engineering, Design and Construction . The designer shall be governed by the above Navy criteria. Where Navy criteria does not address a particular subject, applicable Factory Mutual Engineering Loss Prevention Data Sheets and National Fire Protection Codes shall be consulted. All questions concerning fire protection should be directed to the fire protection branch. The following fire protection items should be considered:

a) Construction should be protected noncombustible. Roofs should be Factory Mutual Class I (see FM APG, Approval Guide) or Underwriter's Laboratories (UL) "Fire Classified" construction, (see UL 790, Test for Fire Resistance of Roof Covering Materials). If existing structures are fire resistant or combustible construction, provide automatic sprinkler protection.

b) Provide areas containing large amounts of combustibles with automatic sprinkler protection and separate from boiler areas by a minimum of 1 hour fire rated walls.

c) Provide explosion relief panels in all spaces storing explosive solids, liquids or gases. These areas include enclosed coal handling facilities, dust collectors, wood preparation areas, coal bunkers or silos, etc.

d) Standpipes and Hose Systems: Refer to MIL-HDBK-1008A. Install 1-1/2 inch hoses in coal facilities in accordance with NFPA 14, Standpipe, Hose Systems. Where there is equipment such as dust collectors, conveyors, etc., on the roof, hose outlets shall be provided. Provide freeze protection.

e) Provide a complete fire and evacuation alarm system throughout facilities. Provide pull stations at exterior exits and sufficient evacuation alarms to overcome the higher noise level found in power plants. Visual alarms should be considered in high noise level areas. Smoke detection systems should be considered in control rooms, switch gear rooms, and similar electrical rooms. All fire protection, fire and evacuation alarm, and smoke detection systems should tie into the base fire alarm system. Installation shall be in accordance with NFPA 72A, Local Protective Systems, NFPA 72B, Auxiliary Signal Systems, and NFPA 72D, Proprietary Signal Systems.

f) Portable fire extinguishers shall be provided throughout, be of a type suitable for the hazard to be protected, and be in accordance with NFPA 10, Portable Extinguishers.

g) Provide exit and emergency lights throughout. Exit signs shall be constantly lit. Provide emergency lights in all areas of the plant, particularly in operating areas. Use local lighting circuits which have battery backup even if the plant has an emergency generator.

h) Consider fixed extinguishing systems for all dust collection systems.

i) Where there is potentially hazardous equipment on the roof of the power plant such as dust collectors or conveyors, an emergency exterior means of reaching the roof shall be included.

j) Access to the roof by stairs shall be considered where it is necessary for plant personnel to perform regular routine work on the roof.

k) Consider all potential exposure problems caused by new construction or additions. Solutions include blocking windows, water curtains, or separations.

10.13.1 Coal Facilities. The following items shall be considered in coal facilities. It should be remembered that the probability of a fire in a coal facility is dependent on the type of coal used, the method of storage and conveyance, and the degree to which the coal is crushed and conditioned.

10.13.1.1 Fire Hydrants. Adequate fire hydrant protection shall be provided for all coal piles. Consideration should be given to the long term methods of coal pile storage to minimize spontaneous combustion. Fires are generally extinguished by moving coal and compacting, but hosing smoldering heaps may be required.

10.13.1.2 Coal Bins. Coal bins or bunkers will require temperature and/or CO monitoring for hot areas which may be conducive to spontaneous combustion.

10.13.1.3 Conveyers. Conveyer systems shall be of noncombustible construction and noncombustible conveyor belts should be used. These systems shall be designed to minimize the chances for the accumulation of coal dust.

10.13.1.4 Feed Systems. The feed systems from storage areas shall be arranged so that the coal can be used or rotated regularly to decrease the chances for spontaneous combustion.

10.13.1.5 Emptying Capability. All bins and bunkers shall be capable of being easily emptied to a remote site in the event of a fire.

10.13.1.6 CO_2 Protection. Carbon dioxide protection shall be considered for all bunkers, bins, and silos.

10.13.1.7 Automatic Extinguishing. Areas requiring automatic, semi-automatic or manual extinguishing systems include emergency generator areas, coal unloading, crusher housing, plant control centers, flue gas baghouse and front areas of oil fired boilers.

10.13.1.8 Operation. Coal handling procedures shall work on First In First Out principle.

10.13.1.9 Horizontal Surfaces. To the maximum extent possible, the interior design of the plant shall minimize horizontal surfaces on which coal dust might collect.

10.14 Electrical Criteria. Electrical service shall be in accordance with MIL-HDBK-1004/4, Electrical Utilization Systems. Power and lighting shall be provided to all structures, stairs, platforms, tunnels, conveyers and areas of access or requiring maintenance. Lighting shall be provided for night-time coal yard operations, fuel unloading, handling and storage operations, parking areas and peripheral security around the outside of the facility.

10.14.1 Receptacles. Receptacles shall be provided at reasonable intervals (not more than 25 ft (7.62 m)) in tunnels, along conveyers, on columns, around peripheral walls, at equipment and in areas requiring maintenance, for temporary lights and portable tools.

10.14.2 Power Factor. Motors and lights shall be power factor corrected.

10.14.2.1 Ratings. The selection of motor controllers, either manual or magnetic, must include both current and voltage ratings. The controller must be rated either in horsepower or both full-load and locked rotor current values suitable for the application. Provide overload relays with heaters selected according to the full-load current rating of the motor. Where fuses are used for short-circuit protection, provide overload protection in each phase of the motor circuit.

10.14.2.2 Magnetic Controllers. When selecting magnetic motor controllers, consideration must also be given to the associated device for short-circuit protection. Use a combination controller and fused switch, combination controller and circuit breaker, or a controller and fuse and circuit breaker combination. Select the combination that is suited for the type of use and that will protect the branch circuit wiring and the starter from damage due to short circuits.

10.14.2.3 Modifications. When selecting a controller, consider the requirements of modifications of the basic device. Switchgear, transformers and related equipment shall be installed with means of future expansion.

10.14.3 Motor Controls

10.14.3.1 Criteria. Additional criteria for selection of motor controllers and motor control centers are contained in NEMA No.IC-1, Standards of Industrial Controls, and in MIL-HDBK-1004/3, Switchgear and Relaying.

10.14.3.2 Protection. The let-through energy from circuit breakers may exceed the short time rating of some motor starters. Therefore, the interrupt rating of the combination starter may not be the same as the breaker alone. Choose fuses which permit the required motor accelerating times and the necessary short circuit protection. Refer to MIL-HDBK-1004/3 for protective devices and methods of limiting short circuit currents. Check manufacturer data for combination starters and fuse ratings.

10.14.3.3 Enclosures. Select the enclosures suitable for the application requirements in accordance with the ratings given in NEMA No. IC-l, and NEMA ICS70, National Electrical Code. Refer to Table 25.

Table 25
Standard Motor Control Enclosures

NEMA Classifications	Comments
Type 1: General purpose	A sheet metal case designed primarily to protect against accidental contact with the control mechanism.
Type 1: Gasketed	The general purpose enclosure with gasketed door or cover.
Type 2: Drip tight	Similar to Type 1 with the addition of drip shields or the equivalent.
Type 3: Weather-resistant	Designed to provide protection against weather hazards such as rain and sleet.
Type 4: Watertight	Designed to meet the hose test described in NEMA Definition IC-1.2.6B.
Type 7: Hazardous locations, Class 1, Airbreak.	
Type 9: Hazardous locations, Class 2, Groups F & G	Enclosures designed to meet application requirements of the NEC for the indicated specific classes of hazardous locations.
Type 9-C Hazardous Locations, Group 2 Group E.	
Type 12: Industrial use	A sheet metal case designed with welded corners and no knockouts to meet the Joint Industry Conference standards for use where it is desirable to exclude dust, lint, fibers and filings, and oil or coolant seepage.

10.14.3.4 Standard Motor Control Centers. The classes are designated by NEMA Standard No. IC-l on the basis of function and further subdivided into types on the basis of wiring type. Select the application control center considering first, the class and the specific type within that class.

10.14.4 Telephones. Furnish telephone outlets in boiler control board areas, pump rooms, offices and outside in fuel storage and handling areas.

10.14.5 Emergency Lighting. Provide dual headed battery operated emergency lights at strategic operational locations such as panel boards, motor control centers, monitoring stations, gauges, platforms, stairs, catwalks, etc. Battery operated exit lights shall be installed indicating the direction toward and above the exit door. Lighting to be installed in accordance with MIL-HDBK-1004/4.

10.14.6 Standby Power Generation System. Standby electrical power generation is required for all coal fired plants, in large oil- or gas-fired plants or where continuous service is essential. In small oil- or gas-fired plants where a short-term heat generation failure can be tolerated, standby electrical power generation may not required. In this case a survey shall be made to determine if the local electrical utility company can reliably supply the facility's electrical needs. A determination shall be made as to whether they can adequately provide power within the tolerable outage time of the heating plant. If power cannot be reasonably expected within this time frame, standby electrical power generation is required.

10.14.6.1 Type of Unit. Units below 25 kW can be air-cooled or water-cooled. Units larger than 25 kW must be water-cooled with closed water systems. Fuel consumption for an air cooled unit is approximately 20 percent more than for a water cooled unit. Units shall be equipped with crankcase heaters and water jacket heaters in cold climates.

10.14.6.2 Emergency Generator Fuel. Stock a four day supply of diesel oil. This can be accomplished with a small tank (2-hour supply) near the engine and a larger tank outside the building with means of automatically filling the small tank. Indoor storage of fuel is limited to comply with the requirements of the NFPA National Fire Codes. Propane gas can be used if justified. Gasoline may only be used for portable emergency generators to be used outdoors.

10.14.6.3 Installation. Install emergency generators in separate sound attenuating room enclosure or building with adequate heating to prevent condensation of moisture in room at freezing temperatures. Suggested minimum room temperature is 55 degrees F (12.8 degrees C). Adequate forced ventilation with motorized dampers shall limit temperatures of room to reasonable working limits. Refer to para. 10.15.3. Ducting that is required to prevent cold room temperatures when the unit is running shall be provided along with motorized dampers controlled by engine temperature. All electrical equipment in the room shall be connected to both normal and standby power.

10.14.6.4 Operation. In the event of a power failure, the emergency operator shall automatically start and transfer load buses. Emergency lighting and small equipment shall be automatically switched to the emergency generator. Major equipment shall be sequenced or be on a timer to start or be manually started from the control room. Plants too small for a control room can have equipment automatically started or local manual start.

10.14.7 Intercommunication System. In multilevel and in multibuilding plants, an intercommunication system shall be considered.

10.14.8 Hazardous Duty Rating. Lighting fixtures, switches, and other equipment likely to be in dust-laden areas should have appropriate hazardous duty rating as listed in ANSI/NFPA 70, National Electric Code.

10.15 Improvement and Modernization

10.15.1 Buildings. Improve and or modify buildings to conform to modern requirements for safety. Conform to latest OSHA requirements and regulations.

10.15.2 Boilers. General maintenance of boilers, such as rebricking and replacing tubes, shall be accomplished as required to bring boilers into first-class operating condition.

10.15.3 Heating and Ventilation. Enclosed boiler rooms and adjacent related spaces shall be adequately heated. Automatic thermostatic controls should be installed. Ventilation systems shall be modified, or provided as required, for good ventilation. Mechanical supply and exhaust system is required to provide adequate heated combustion and tempered ventilation air and to limit the maximum room temperature in the summer to 104 degrees F (40 degrees C) if practicable.

10.15.4 Fuel. Central heating plant boilers shall be equipped for dual fuel operation in accordance with MIL-HDBK-1190. Plants presently operating on a single fuel shall be provided with alternate fuel capabilities. For example, plants using oil as the primary fuel should be equipped with combination gas-oil burners where gas is available, with the gas utilized as the secondary fuel. In some instances, oil storage and transfer facilities may be necessary to serve secondary fuel to plants operating on gas or coal. In selecting an alternate fuel, also consider problems of transportation and distribution during fuel mobilization. Fans, breeching and stacks shall be modified as required to suit the alternate fuel as well as the primary fuel.

10.15.5 Fuel Storage. Storage shall be provided as required in para. 5.4.1.3, 5.4.2.1, and 5.4.4. Storage capacity should not be diminished for back up fuel when dual fuels are used.

10.15.6 Coal Handling. Manual coal-handling facilities shall be mechanized and improved to provide more efficient and automatic operation. The equipment includes truck or railroad car hoppers, bucket elevators, storage silos, and stokers.

10.15.7 Ash Handling. Ash-handling facilities shall be mechanized and improved to meet modern standards where required. Plants shall be provided with completely mechanized pneumatic or mechanical ash conveying systems.

10.15.8 Water Treatment. Boiler water treatment is required in all plants. Untreated raw water will cause scale deposits and cause general corrosion of the boiler water side. Provide adequate means to analyze feed and boiler water conditions and install adequate water treatment equipment.

10.15.9 Combustion Controls. Include all necessary equipment to automatically control steam pressure or HTW temperature, water level, fuel combustion, air flow, etc. of steam, hot water, and HTW boilers. Steam pressure or HTW temperature shall be maintained by automatic modulation of fuel input. The proper fuel-air ratio is maintained by automatic modulation of the air flow from the forced draft fan. The automatic control of the furnace draft pressure is provided by modulation of induced draft fan speed and inlet damper. The above controls shall include a remote means of manual adjustment along with the panel indicator, to show the extent of adjustments. Combustion controls shall conform, in general, to MIL-HDBK 1003/12, Boiler Controls.

10.15.10 Safety Controls. These controls are of prime importance in all heating plants. Where omissions or other deficiencies exist, steps shall be taken to correct, update, or modify the controls to perform adequately and to meet safety standards. Boiler controls shall meet the minimum requirements per the most recent ANSI/ASME CSD-1, Control and Safety Devices for Automatically Fired Boiler, and NFPA 85 series. Where local or state codes differ from the ANSI/ASME and NFPA codes the more stringent code requirements shall prevail. The safety devices shall operate to shutoff the fuel supply to the burners in the event of any of the following malfunctions:

a) Flame failure,

b) Low water level,

c) High steam or HTW pressure,

d) Low fuel pressure (oil or gas),

e) High gas pressure,

f) Low oil temperature,

g) Loss of forced or induced draft fans.

Safety shutoff valve shall be manual reset type, and shall not be operable until all limit controls are in the safe position. Sequence interlocks for start-up and stop shall also be provided. Also provide annunciator alarms to respond to any safety shutdown.

10.15.11 Instruments. Supervisory instruments shall be mounted on control boards in coordinated groupings per MIL-HDBK 1003/12. Integrating and indicating type oil and gas flow meters shall be provided for accurate determination of fuel consumption during any given period.

10.15.12 Air Pollution. Flue gas particulate control shall be installed in coal-fired plants, between the boilers and induced draft fans. They shall be high efficiency multi-cyclone, fabric filter baghouse or electrostatic precipitator or combination of the above, as required to meet the air pollution regulations in effect at the plant site. Also refer to Section 6.

10.16 Seismic Design Criteria. Central heating plants shall be designed in accordance with NAVFAC P-355, and NAVFAC P-355.1, Seismic Design Guidelines for Essential Buildings.

10.17 Metering Locations. Meters shall be required on fuel lines, electrical and water service to the buildings and to boilers in the building. Steam output metering of the header and at each steam generator shall be provided for periodic reports and testing.

REFERENCES

Note: Unless otherwise specified in the text, users of this handbook should use the latest revisions of documents cited herein.

FEDERAL/MILITARY SPECIFICATIONS, STANDARDS, BULLETINS, HANDBOOKS, AND NAVFAC GUIDE SPECIFICATIONS:

The following specifications, standards, bulletins and handbooks form a part of this document to the extent specified herein. Unless otherwise indicated, copies are available from STANDARDIZATION DOCUMENTS ORDER DESK, Building 4D, 700 Robbins Ave, Philadelphia, PA 19111-5094.

STANDARDS

MIL-STD-101B	Color Code for Pipelines for Compressed Gas Cylinders
WW-H-171E	Hangers and Support, Pipe
WW-T-696	Steam Traps

HANDBOOKS

MIL-HDBK-1003/8	Exterior Distribution of Utility Steam, HTW, CHW, Natural Gas, and Compressed Air
MIL-HDBK 1003/12	Boiler Controls
MIL-HDBK 1004/3	Switchgear and Relaying
MIL HDBK 1004/4	Electrical Utilization Systems
MIL HDBK 1004/10	Cathodic Protection
MIL-HDBK-1008A	Fire Protection for Facilities
	Engineering, Design, and Construction
MIL-HDBK-1023/1	Airfield Lighting
MIL-HDBK-1190	Facility Planning and Design Guide

NAVY DESIGN MANUALS, P-PUBLICATIONS, AND MAINTENANCE OPERATING MANUALS:

Available from Commanding Officer, Naval Publications and Forms Center, (NPFC), 5801 Tabor Avenue, Philadelphia, PA 19120-5099. To order these documents: Government agencies must use the Military Standard Requisitioning and Issue Procedure (MILSTRIP); the private sector must write to NPFC, ATTENTION: Cash Sales, Code 1051, 5801 Tabor Avenue, Philadelphia, PA 19120-5099.

DM-3.03	Heating, Ventilating, Air Conditioning and Dehumidifying Systems
DM-3.05	Compressed Air and Vacuum Systems
DM-22	Petroleum Fuel Facilities
MO-230	Maintenance Manual Petroleum Fuel Facilities
NSTM	Chapter 220, Boiler/Feedwater Testing and Treatment
P-355	Seismic Design For Buildings
P-355.1	Seismic Design Guidelines for Essential Buildings
P-442	Economic Analysis Handbook

NAVY DEPARTMENTAL INSTRUCTIONS: Available from Commanding Officer, Naval Publications and Forms Center, ATTENTION: Code 3015, 5801 Tabor Avenue, Philadelphia, PA 19120-5099.

NAVAIR 51-50 AAA-2	General Requirements for Airfield Marking and Lighting
NAVFACINST 10340.4C	Coal Requirement and Requisitions
NAVFACINST 10343.1A	Navy Special, Navy Distillate and Marine Diesel Fuel Oils; On-Shore Use of
OPNAVINST 4100.6	Energy Financing and Source Selection Criteria for Shore Facilities
SECNAVINST 7000.14	Economic Analysis and Program Evaluation for Navy Resource Management

OTHER GOVERNMENT DOCUMENTS AND PUBLICATIONS:

The following documents and publications form a part of this document to the extent specified herein. Unless otherwise specified, the issues of the documents which are DoD adopted are those listed in the Department of Defense Index of Specification and Standards (DODISS).

DEPARTMENT OF LABOR

29 CFR 1910, Chapter XVII, Occupational Safety and Health Act of 1970

29 CFR 1910, Subpart Z, paragraph 1910.1200, Hazard Communication Standard

(Unless otherwise indicated, copies are available from Occupational Safety and Health Administration, 200 Constitution Avenue NW, Washington DC 20210)

ENVIRONMENTAL PROTECTION AGENCY

38 CFR 237	Environmental Protection Agency, Oil Pollution Prevention, Non-Transportation Related Onshore and Offshore Facilities
40 CFR 51, Chapter 1	GEP (Good Engineering Practice) Methods of Determining Stack Height, Dispersion Techniques, and Restraints on Stack Design
40 CFR 60, Appendix A	Reference Methods
AP-42	Compilation of Air Pollutant Emission Factors
EPA/625/5-86/020	Nitrogen Oxide Control for Stationary Combustion Sources

(Unless otherwise indicated, copies are available from Superintendent of Documents, U.S. Government Printing Office, Washington, D.C. 20402)

UG-0005	Steam Traps Users Guide

(Unless otherwise indicated, copies are available from the Naval Civil Engineering Laboratory, Port Hueneme, CA 93043.)

NON-GOVERNMENT PUBLICATIONS:

The following publications form a part of this document to the extent specified herein. Unless otherwise specified, the issues of the documents which are DoD adopted are those listed in the Department of Defense Index of Specifications & Standards (DODISS):

Combustion Engineering, Inc. (1981), Combustion/Fossil Power Systems, available from Combustion Engineering, 1000 prospect Hill Road, Windsor, CT 06095.

Betz (1980), Handbook of Industrial Water Conditioning, available from BETZ Laboratories, INC., Trevose, PA 19047.

Baumeister, Theodore, Avalone, Eugene A., and Baumeister III, Theodore (1978), Marks' Standard Handbook for Mechanical Engineers, Eighth Edition, available from McGraw-Hill, Inc., New York, NY.

Kemmer, F.N., (1979), The Nalco Water Handbook, available from McGraw Hill Book Company, New York, NY.

Morse, Frederick Tracy (1943), Power Plant Engineering and Design, available from Van Nostrand Reinhold Co., New York, NY.

The Babcock & Wilcox Company (1978), Steam/Its Generation and Use, 39th Edition, available from Babcock & Wilcox, 161 East 42nd Street, New York, NY 10017.

Schmidt, Paul F. (1985), Fuel Oil Manual, available from Industrial Press, Inc., New York, NY.

Windler, E.J. (1980), Coatings for Power Plants, Power Engineering, available from McGraw-Hill, Inc., New York, NY.

AMERICAN GAS ASSOCIATION (AGA)

GMC -- Gas Measurement Committee Report No. 1

(Unless otherwise indicated, copies are available from American Gas Association, 8501 East Pleasant Valley Road, Cleveland, OH 44131)

AMERICAN NATIONAL STANDARDS INSTITUTE (ANSI)

ANSI/ASME B31.1	Power Piping
ANSI/ASME CSD-1	Control and Safety Devices for Automatically Fired Boiler
ANSI/ISA 57.3	Quality Standard for Instrument Air
ANSI/NFPA 31	Installation of Oil Burner Equipment
ANSI/NFPA 54	National Fuel Gas Code
ANSI/NFPA 70	National Electric Code

(Unless otherwise indicated, copies are available from ANSI Standards, 1430 Broadway, New York, NY 10018.)

AMERICAN SOCIETY OF HEATING, REFRIGERATING, AND AIR-CONDITIONING ENGINEERS, INC. (ASHRAE)

HE	ASHRAE Equipment Handbook

(Unless otherwise indicated, copies are available from ASHRAE, 1791 Tullie Circle, N.E., Atlanta, GA 30329.)

AMERICAN SOCIETY OF MECHANICAL ENGINEERS (ASME)

Boiler and Pressure Vessel Code

ANSI/ASME B31.1	Power Piping
PTC-4.1	Steam Generating Units
PTC-27	Dust Separating Apparatus
PTC-28	Determining the Properties of Fine Particulate Matter

(Unless otherwise indicated, copies are available from ASME Order Dept., 22 Law Drive, Box 2350, Fairfield, NJ 07007-2350.)

AMERICAN SOCIETY FOR TESTING AND MATERIALS (ASTM)

D 720	Specification for Spray-Applied Fibrous Thermal Insulation for Elevated Temperature
D 1066	Sampling Steam
D 1857	Standard Test Method for Fusibility of Coal and Coke Ash
D 2015	Test Method for Gross Calorific Value of Solid Fuel by Adiabatic Bomb Calorimeter
D 2492	Test Method for Forms of Sulfur in Coal
D 3172	Proximate Analysis of Coal and Coke
D 3174	Test Method for Ash in the Analysis Sample of Coal and Coke from Coal
D 3175	Test Method for Volatile Matter in the Analysis Sample of Coal and Coke

D 3177 Test Method for Total Sulfur in the Analysis Sample of Coal and Coke

D 3286 Test Method for Gross Calorific Value of Solid Fuel by the Isothermal-Jacket Bomb Calorimeter

(Unless otherwise indicated, copies are available from the American Society for Testing and Material, 1916 Race Street, Philadelphia, PA 19103.)

FACTORY MUTUAL ENGINEERING AND RESEARCH CORPORATION (FM)

FM APG Approval Guide

(Unless otherwise indicated, copies are available from Factory Mutual Engineering and Research Corporation, 1151 Boston-Providence Turnpike, P.O. Box 688, Norwood, MA 02062.)

INDUSTRIAL GAS CLEANING INSTITUTE (IGCI)

IGCI Bulletin 101
Test Procedures

(Unless otherwise indicated copies are available from Industrial Gas Cleaning Institute, Inc., 700 North Fairfax Street, Suite 304, Alexandria, VA 22314.)

NATIONAL ASSOCIATION OF CORROSION ENGINEERS (NACE)

Handbook

(Unless otherwise indicated copies are available from NACE, 2400 West Loop South, Houston, TX 77027)

NATIONAL BOARD OF BOILER AND PRESSURE VESSEL INSPECTORS (NBBI)

NB-23-89 National Board Inspection Code

(Unless otherwise indicated copies are available from The National Board of Boiler and Pressure Vessel Inspectors, 1055 Crupper Avenue, Columbus, OH 43229.)

NATIONAL ELECTRICAL MANUFACTURERS ASSOCIATION (NEMA)

No. IC-1 Standards of Industrial Controls

(Unless otherwise indicated, copies are available from NEMA Standards, 2101 L Street, N.W., Washington, DC 20037.)

NATIONAL FIRE PROTECTION ASSOCIATION (NFPA)

10	Portable Extinguishers
14	Standpipe, Hose Systems
31	Oil Burning Equipment Installation
46	Storage of Forest Products
68	Venting of Deflagrations
72A	Local Protective Systems
72B	Auxiliary Signal Systems
72D	Proprietary Signal Systems
85A	Single Burner Boiler-Furnaces, Prevention of Furnace Explosions
85B	Gas Multi-Burner Boiler, Prevention of Furnace Explosions
664	Wood Processing and Woodworking Facilities

(Unless otherwise indicated, copies are available from NFPA Batterymarch Park, Quincy, MA 00269.)

UNDERWRITERS LABORATORIES, INC. (UL)

UL 790	Test for Fire Resistance of Roof Covering Materials

(Unless otherwise indicated, copies are available from Underwriters Laboratories, Inc., 333 Pfingston Road, Northbrook, IL 60062.)

CUSTODIAN
NAVY - YD

PREPARING ACTIVITY
NAVY - YD

PROJECT NO.
FACR - 1051