UFC 3-440-04N
16 January 2004

UNIFIED FACILITIES CRITERIA (UFC)

DESIGN: SOLAR HEATING OF BUILDINGS AND DOMESTIC HOT WATER

APPROVED FOR PUBLIC RELEASE; DISTRIBUTION UNLIMITED

UNIFIED FACILITIES CRITERIA (UFC)

DESIGN: SOLAR HEATING OF BUILDINGS AND DOMESTIC HOT WATER

Any copyrighted material included in this UFC is identified at its point of use.
Use of the copyrighted material apart from this UFC must have the permission of the copyright holder.

U.S. ARMY CORPS OF ENGINEERS

NAVAL FACILITIES ENGINEERING COMMAND (Preparing Activity)

AIR FORCE CIVIL ENGINEERING SUPPORT AGENCY

Record of Changes (changes indicated by **1**\ ... /**1**/)

Change No.	Date	Location

FOREWORD

The Unified Facilities Criteria (UFC) system is prescribed by MIL-STD 3007 and provides planning, design, construction, sustainment, restoration, and modernization criteria, and applies to the Military Departments, the Defense Agencies, and the DoD Field Activities in accordance with USD(AT&L) Memorandum dated 29 May 2002. UFC will be used for all DoD projects and work for other customers where appropriate.

UFC are living documents and will be periodically reviewed, updated, and made available to users as part of the Services' responsibility for providing technical criteria for military construction. Headquarters, U.S. Army Corps of Engineers (HQUSACE), Naval Facilities Engineering Command (NAVFAC), and Air Force Civil Engineer Support Agency (AFCESA) are responsible for administration of the UFC system. Defense agencies should contact the preparing service for document interpretation and improvements. Technical content of UFC is the responsibility of the cognizant DoD working group. Recommended changes with supporting rationale should be sent to the respective service proponent office by the following electronic form: Criteria Change Request (CCR). The form is also accessible from the Internet sites listed below.

UFC are effective upon issuance and are distributed only in electronic media from the following sources:

- Unified Facilities Criteria (UFC) Index http://65.204.17.188//report/doc_ufc.html.
- USACE TECHINFO Internet site http://www.hnd.usace.army.mil/techinfo/index.htm.
- NAVFAC Engineering Innovation and Criteria Office Internet site http://criteria.navfac.navy.mil.
- Construction Criteria Base (CCB) system maintained by the National Institute of Building Sciences at Internet site http://www.nibs.org/ccb.

Hard copies of UFC printed from electronic media should be checked against the current electronic version prior to use to ensure that they are current.

AUTHORIZED BY:

DONALD L. BASHAM, P.E.
Chief, Engineering and Construction Division
U.S. Army Corps of Engineers

DR. JAMES W WRIGHT, P.E.
Chief Engineer
Naval Facilities Engineering Command

KATHLEEN I. FERGUSON, P.E.
The Deputy Civil Engineer
DCS/Installations & Logistics
Department of the Air Force

Dr. GET W. MOY, P.E.
Director, Installations Requirements and Management
Office of the Deputy Under Secretary of Defense (Installations and Environment)

CONTENTS

Page

CHAPTER 1 INTRODUCTION

Paragraph 1-1 PURPOSE AND SCOPE 1-1
1-2 APPLICABILITY 1-1
1-2.1 General Building Requirements 1-1
1-2.2 Safety 1-1
1-2.3 Fire Protection 1-1
1-2.4 Antiterrorism/Force Protection 1-1
1-3 REFERENCES 1-2

APPENDIX A MIL-HDBK 1003/13A, JUNE 1985..... A-1

CHAPTER 1

INTRODUCTION

1-1 **PURPOSE AND SCOPE**. This UFC is comprised of two sections. Chapter 1 introduces this UFC and provides a listing of references to other Tri-Service documents closely related to the subject. Appendix A contains the full text copy of the previously released Military Handbook (MIL-HDBK) on this subject. This UFC serves as criteria until such time as the full text UFC is developed from the MIL-HDBK and other sources.

This UFC provides general criteria for the design of solar heating of buildings and domestic hot water.

Note that this document does not constitute a detailed technical design, maintenance or operations manual, and is issued as a general guide to the considerations associated with design of economical, efficient and environmentally acceptable heating plants.

1-2 **APPLICABILITY**. This UFC applies to all Navy service elements and Navy contractors; Army service elements should use the references cited in paragraph 1-3 below; all other DoD agencies may use either document unless explicitly directed otherwise.

1-2.1 **GENERAL BUILDING REQUIREMENTS**. All DoD facilities must comply with UFC 1-200-01, *Design: General Building Requirements*. If any conflict occurs between this UFC and UFC 1-200-01, the requirements of UFC 1-200-01 take precedence.

1-2.2 **SAFETY**. All DoD facilities must comply with DODINST 6055.1 and applicable Occupational Safety and Health Administration (OSHA) safety and health standards.

NOTE: All **NAVY** projects, must comply with OPNAVINST 5100.23 (series), *Navy Occupational Safety and Health Program Manual*. The most recent publication in this series can be accessed at the NAVFAC Safety web site: www.navfac.navy.mil/safety/pub.htm. If any conflict occurs between this UFC and OPNAVINST 5100.23, the requirements of OPNAVINST 5100.23 take precedence.

1-2.3 **FIRE PROTECTION**. All DoD facilities must comply with UFC 3-600-01, *Design: Fire Protection Engineering for Facilities*. If any conflict occurs between this UFC and UFC 3-600-01, the requirements of UFC 3-600-01 take precedence.

1-2.4 **ANTITERRORISM/FORCE PROTECTION**. All DoD facilities must comply with UFC 4-010-01, *Design: DoD Minimum Antiterrorism Standards for Buildings*. If any conflict occurs between this UFC and UFC 4-010-01, the requirements of UFC 4-010-01 take precedence.

1-3 **REFERENCES**. The following Tri-Service publications have valuable information on the subject of this UFC. When the full text UFC is developed for this subject, applicable portions of these documents will be incorporated into the text. The designer is encouraged to access and review these documents as well as the references cited in Appendix A.

1. US Army Corps of Engineers
Commander
USACE Publication Depot
ATTN: CEIM-IM-PD
2803 52nd Avenue
Hyattsville, MD 20781-1102
(301) 394-0081 fax: 0084
karl.abt@hq02.usace.army.mil
http://www.usace.army.mil/inet/usace-docs/

USACE TL 1110-3-491, Sustainable Design for Military Facilities
01 May 2001

APPENDIX A

MIL-HDBK 1003/13A
SOLAR HEATING OF BUILDINGS AND DOMESTIC HOT WATER

MIL-HDBK 1003/13A
14 June 1985
SUPERSEDING
MIL-HDBK-1003/13
9 November 1981

MILITARY HANDBOOK

SOLAR HEATING OF BUILDINGS

AND DOMESTIC HOT WATER

DEPARTMENT OF DEFENSE
UNITED STATES OF AMERICA

FACR

DISTRIBUTION STATEMENT A. Approved for public release, distribution is unlimited.

NO DELIVERABLE DATA REQUIRED BY THIS DOCUMENT

CONTENTS

Page

1.0 INTRODUCTION 1

1.1 Scope 1
1.2 Related Criteria 1
1.3 Solar Energy 4

1.3.1 Solar Radiation 4
1.3.2 Collecting Solar Energy 4
1.3.3 Solar Collector Orientation 12
1.3.4 Advantages and Disadvantages 14

2.0 SOLAR SYSTEM COMPONENTS 15

2.1 Collectors 15

2.1.1 Liquid and Air-Type Collectors 17
2.1.2 Selective Surfaces 17
2.1.3 Collector Covers (Glazes) 19
2.1.4 Collector Insulation 22
2.1.5 Collector Housings 22
2.1.6 Collector Gaskets and Sealants 24
2.1.7 Collector Fluids - Corrosion and Freeze Protection 25

2.1.7.1 Silicone Fluids 30
2.1.7.2 Hydrocarbons 33
2.1.7.3 Distilled Water 33
2.1.7.4 Water/Antifreeze 33

2.1.8 Collector Connections 34
2.1.9 Collector Efficiency and Heat Losses 36
2.1.10 Other Types of Solar Collectors 46

2.1.10.1 Evacuated-Tube Collectors 46
2.1.10.2 Concentrating Collectors 47

2.2 Energy Storage and Auxiliary Heat 48

2.2.1 Storage Tanks 51

2.3 Domestic Hot Water Systems (DHW) 52
2.4 Thermosyphon, Batch, and Integral Storage Collector Systems 57
2.5 Space Heating and DHW Systems 58

2.5.1 Heat Distribution for Liquid-Type Solar Systems 62
2.5.2 Heat Distribution for Air-Type Solar Systems 63
2.5.3 Heat Pumps 64

2.6 Passive Systems 68
2.7 Solar Cooling Systems 74

2.7.1 Absorption Cooling 74
2.7.2 Bankine Cycle Heat Engine Cooling 76
2.7.3 Desiccant Cooling 77
2.7.4 Other Cooling Methods 79
2.7.5 Estimating System Size 79

2.8 System Controls 80
2.9 Piping, Pumps, Valves 82

2.9.1 Pipe and Header Sizing 82
2.9.2 Pumps and Collector Flowrate 83
2.9.3 Valves 83

2.10 Other Considerations 84

2.10.1 Architectural 84
2.10.2 Reduction of Heat Losses 84
2.10.3 Maintenance and Accessibility 84
2.10.4 Contract Submittals Required 85

3.0 DESIGN METHODS 87

3.1 Job Summary - Worksheet A 87
3.2 Solar Collector Parameters - Worksheet B 87
3.3 Load Calculations - Worksheet C-1 90
3.4 Demand Calculations - DHW - Worksheet C-2 91
3.5 Monthly Solar Collection Parameters - Worksheet D-1 98
3.6 Fraction of Load Supplied by Solar Heat - Worksheet D-2 98
3.7 Economic Analysis 107

3.7.1 Fuel Savings - Worksheet E-1 107
3.7.2 Operating and Maintenance (O&M) Costs 109
3.7.3 Present Worth Analysis and Savings Investment Ratio 109

3.7.3.1 Present Worth Analysis Using a Discount Factor - Worksheet E-1 or E-2 110
3.7.3.2 Present Worth Analysis Without the Discount Factor - Worksheet E-1 111

3.8 Collector Temperatures - Worksheet E-1 111
3.9 Solar System Cost - Worksheet F 115
3.10 Additional Costs - Worksheet G 115
3.11 Sizing the Heat Exchanges for Space Heating 115
3.12 Air-Heating Collector Design - Worksheet H 117
3.13 Worksheets 117

Worksheet A - Job Summary 119
Worksheet B - Solar Collector Parameters 120
Worksheet C-1 - Load Calculations 121
Worksheet C-2 - Demand Calculations - Domestic Water Heater 122
Worksheet D-1 - Monthly Solar Collector Parameters 123
Worksheet D-2 - Fraction of Load Supplied by Solar Heat 124
Worksheet E-1 - Value of Fuel Saved 125
Worksheet E-2 - Present Worth Analysis 126
Worksheet F - Solar System Cost Analysis 127
Worksheet G - Additional Cost Items Related to Use of Solar Heating 128
Worksheet H - Solar Air Collector System Design Summary 129

4.0 EXAMPLE PROBLEMS 130

4.1 Discussion of Example 1, Space Heating and DHW System 130

4.1.1 Example 1 - Worksheets 132

5.0 DIRECTORY OF SOLAR EQUIPMENT MANUFACTURERS 142

5.1 Manufacturers Directories 142
5.2 Manufacturers of Flat Plate Collectors and Other Solar Hot Water Equipment 142

6.0 REFERENCES (*) AND SELECT BIBLIOGRAPHY 143

7.0 LIST OF SYMBOLS 150

LIST OF FIGURES

Figure 1-1 The sun's path across the sky at specific times of the year 5
Figure 1-2 Schematic cross section of typical solar heat collector with heavy back insulation and two cover sheets 5
Figure 1-3 Collector tilt for domestic hot water (usually = latitude, but 10-degree variations either side of optimum are acceptable) 13
Figure 1-4 Collector orientation (optimum = true south, but 20-degree variations to either side are acceptable, local climate and collector type may influence orientation) 13
Figure 2-1 Types of solar heat collectors 16
Figure 2-2 Single gasket seal for double glazing 24

Figure 2-3 Typical sealing method for single or double glazing 24
Figure 2-4 Typical configurations for solar water heating systems 27
Figure 2-5 Heat exchangers for solar water heating systems 28
Figure 2-6 Connection schemes for solar heating systems 35
Figure 2-6a Collector piping 35
Figure 2-7 Typical solar heater collector efficiencies 38
Figure 2-8 Evacuated tube solar heat collector 46
Figure 2-9 Concentrating collectors for solar energy 47
Figure 2-10 Schematic of potable hot water heating system using solar storage (tempering) tank ahead of conventional fueled or electric service water heater 50
Figure 2-11 Typical DHW installation 54
Figure 2-11a Thermosyphon System Tests 56
Figure 2-12 Minimum heating system, showing relationship 59
Figure 2-13 Space heating system with closed collector loop 60
Figure 2-14 Space heating and domestic hot water system 60
Figure 2-15 Typical air-type heat delivery system 61
Figure 2-16 A liquid-to-air heat delivery system 63
Figure 2-17 Series-connected, solar-assisted heat pump system 66
Figure 2-18 Parallel-connected, solar-assisted heat pump system ... 67
Figure 2-19 Passive solar energy systems 69
Figure 2-20 New-construction (office) passive solar energy system . 71
Figure 2-21 Vertical wall solar collector 71
Figure 2-22 South wall solar collector with combined storage 72
Figure 2-23 Retrofitted large rock bin storage 73
Figure 2-24 Schematic of lithium bromide absorption cooler..... 75
Figure 2-25 Schematic of solar desiccant cooling 78
Figure 2-26 Control system strategy 80
Figure 2-27 Control system for space and DHW heating 81
Figure 3-1 Fraction of space heating/DHW load supplied by solar energy (Beckman, Klein, and Duffie, 1977) 88
Figure 3-2 Slope factor, S, for use on Worksheet D-1 (average over one day) 100
Figure 3-3 Fraction of space heating/DHW load supplied by solar air heating system (after Klein, Beckman, and Duffie, 1977) 118

LIST OF TABLES

Table 1-1 Total Horizontal Solar Radiation Intensity (Btu/sq. ft.-day) from Solar Energy Research 6
Table 2-1 Advantages and Disadvantages of Air and Liquid Heating Systems 18

Table 2-2 Characteristics of Absorber Coatings (U.S. Dept. HUD, 1977) 20
Table 2-3 A Comparison of Various Materials Used for Collector Covers 21
Table 2-4 Guide to Selection of Number of Transparent Cover Plates 23
Table 2-5 Heat Transfer Fluids (Solar Engineering, 1978) and DOE Solar Heating Materials Handbook (1981) 31
Table 2-6 Solar Collector Test Results 39
Table 2-7 Advantages and Disadvantages of Tank Types (Cole et al., 1979) 53
Table 2-8 Storage Tank Costs 54
Table 2-9 Hot Water Demands and Use for Various Types of Buildings 55
Table 3-1 Building Heat Loss Rates 91
Table 3-2 Total Heating Degree Days (Base 65 deg. F) from Solar Energy Research Institute 92
Table 3-3 DHW Temperature at Source in Selected Locations (U.S. Dept HUD, 1977) 99
Table 3-4 Average Daytime Ambient Temperatures (deg. F) from Solar Energy Research Institute (1981) 101
Table 3-5a Annual Fuel Inflation Factors, 10% Discount 112
Table 3-5b Fuel Inflation Factors - No Discount 113
Table 3-5c Annual Fuel Inflation Factors, 7% Discount 114
Table 3-6 Solar System Component Cost Estimates 116
Table 3-7 Solar Collector Prices 116

1.0 INTRODUCTION

1.1 Scope. This handbook presents design criteria and cost analysis methods for the sizing and justification of solar heat collectors for potable water and space heaters. Sufficient information is presented to enable engineers to design solar space conditioning and water heating systems or conduct feasibility studies based on solar collector performance, site location, and economics. Both retrofit and new installations are considered.

1.2 Related criteria. Certain criteria relating to space heating and domestic hot water (DHW) heating systems appear elsewhere and are listed below.

a. The Department of Defense general requirements are found in the Construction Criteria Manual, DOD 4270.1-M.

b. Some portions of Design Manual DM-3 series relating to heating and hot-water systems pertain to this manual. These and other relevant sources of applicable criteria are listed below:

Subject	Source
Plumbing Systems	DM-3 Series
Heating Systems	DM-3 Series
Architectural Criteria	DM-3 Series
Electrical Criteria	DM-3 Series
Hazards & Safety Precautions	DM-3 Series
Insulation	DM-3 Series
Structural Criteria	DM-3 Series
Central Heating Plant	DM-3 Series
Corrosion Protection	DM-3 Series
Water Condition	DM-3 Series
Housing & Building Designs (definitive)	NAVFAC P-272
Weather Data	NAVFAC P-89

c. Standards and performance criteria relating to solar heating systems have been evolved by Government agencies and various associations and institutes. The most widely used are listed below:

Subject	Document
Solar Collector Instantaneous Performance	ASHRAE Standard 93-77, "Methods of Testing to Determine the Thermal Performance of Solar Collectors"
Thermal Storage Devices	ASHRAE Standard 94-77, "Methods of Testing Thermal Storage Devices Based on Thermal Performance"

Subject	Document
Complete Solar Collector Performance Evaluation	National Bureau of Standards, NBSIR 78-1305A, "Provisional Flat Plate Solar Collector Testing Procedures: First Revision"
Testing Solar Hot Water Heaters (includes Thermo-syphon, Batch, Breadbox, or Integral Storage Collectors)	ASHRAE Standard 95-81, "Methods of Testing to Determine the Thermal Performance of Solar Domestic Water Heating Systems"
Testing Swimming Pool Solar Collectors	ASHRAE Standard 98-80, "Methods of Testing to Determine the Thermal Performance of Unglazed Flat-Plate Liquid Solar Collectors"
Testing Tracking Concentrator Collectors	Solar Energy Industries Association, "Methodology for Determining the Thermal Performance Rating for Tracking Concentrator Solar Collectors"
Solar System Performance	National Bureau of Standards, NBSIR 76-1187, "Interim Performance Criteria for Solar Heating and Cooling Systems in Commercial Buildings"
Property Standards for Solar Systems	HUD Report 4930.2, "Intermediate Minimum Property Standards Supplement, Solar Heating and Domestic Hot Water Systems"
Property Standards Developed for HUD Domestic Hot Water Initiative	National Bureau of Standards, NBSIR 77-1272, "Intermediate Standards for Solar Domestic Hot Water Systems/HUD Initiative"
Solar Collector Certification and Labeling	ARI Standard 910, "The Air Conditioning and Refrigeration Institute (ARI) Certification Program for Solar Collectors"
Solar Collector Certification, Rating, and Labeling	Solar Energy Industries Association Standard, Directory of SRCC Certified Solar Collector Ratings, Spring 1983 Edition

Subject	Document
Building Code	Council of American Building Officials DOE/CS/34281-01, "Recommended Requirements to Code Officials for Solar Heating, Cooling, and Hot Water Systems", Jun 1980
Overall Standards Summary	National Bureau of Standards, NBSIR 78-1143A, "Plan for the Development and Implementation of Standards for Solar Heating and Cooling Applications"; or "ASTM Standards on Solar Energy", ASTM Committee E-44, Jul 1981
Installation Guidelines	National Bureau of Standards, NBS Tech. Note 1134, "Guidelines for the Installation of Solar Components on Low Sloped Roofs"; and Dept. of Energy, "Installation Guidelines for Solar DHW Systems in One and Two-Family Dwellings"; and National Bureau of Standards, NBSIR 80-2116, "Dimensional Considerations in Solar Installations"; and Sheet Metal and Air Conditioning Contractor National Association, Inc., "Installation Standards for One and Two-Family Dwellings and Multifamily Housing Including Solar"
Solar Materials and Components	Dept. of Energy, DOE/TIC-11374 "Solar Heating Materials Handbook" Jan 1981; and National Bureau of Standards Technical Note 1132, "Solar Energy Systems - Standards for Cover Plates for Flat Plate Collectors" Dec 1980; and National Bureau of Standards, NBSIR 79-1913, "Solar Energy Systems - Standards for Rubber Hose" Oct 1979; and National Bureau of Standards, NBSIR 81-2232, "Solar Energy Systems - Standards for Absorber Materials" Jan 1981
Miscellaneous Tests	National Bureau of Standards, NBSIR 81-2344, "Fire Testing of Roof-Mounted Solar Collectors by ASTM E108" Aug 1981; and

Subject	Document
Miscellaneous Tests (cont.)	National Bureau of Standards, NBSIR 81-2199, "Wind, Earthquake, Snow, and Hail Loads on Solar Collectors" Jan 1981; and NBSIR 82-2487, "Hail Impact Testing Procedures for Solar Collector Covers" Apr 1982
Product Safety (See also HUD Report 4930.2)	National Bureau of Standards, NBSIR78-1532, "Environmental and Safety Considerations for Solar Heating and Cooling Applications"
Certified Test Labs	National Bureau of Standards, NBSIR 78-1535, "Laboratories Technically Qualified to Test Solar Collectors in Accordance with ASHRAE Standard 93-77" Nov 1978

In addition to these standards, there are plumbing standards published by The International Association of Mechanical and Plumbing Officials (IAMPO), and various state building codes.

1.3 Solar energy.

1.3.1 Solar radiation. Energy from the sun is received by the earth as electromagnetic radiation. Most of the energy is received in the visible and infrared portions and a small amount as ultraviolet radiation. North of the Tropic of Cancer (23 deg. N latitude), the sun makes a daily arc across the southern sky from east to west as shown in Figure 1-1. For a typical location at 32 deg. N latitude the sun would be 81.5 deg. above the southern horizon or nearly overhead at noon (solar time) on June 21 while on December 21 it would be only 34.6 deg. above the horizon (Barnaby et al., 1977).

Solar insolation (I) is measured in Langleys (L) or Btu/ft^2. One Langley equals 3.688 Btu/ft^2. The amount of solar energy that exists outside the atmosphere, often called the solar constant, is 116.4 L/hr or 429.2 Btu/ft^2-hr. At most 70% to 80% of this amount will strike the earth's surface, the remainder being absorbed or reflected in the atmosphere. Monthly average and yearly average daily insolation data for numerous locations are given in Table 1-1. In general, the higher the latitude, the less insolation is received on a horizontal surface.

1.3.2 Collecting solar energy. Collection of solar energy is based on the very high absorption of radiant energy by dull, black surfaces and on the "greenhouse effect." The latter refers to the ability of glass to transmit visible radiation but prevent the loss of heat from the collector plate which radiates at longer wavelengths (infrared frequencies). Glass (or plastic) cover plates are generally used over flat absorber plates to reduce heat loss (see Figure 1-2). The heated absorber plate may have a fluid (water, air or other) pass over it or through tubes attached to the plate. The fluid thus heated may be used to heat potable water, heat spaces, or drive an absorption or Rankine power cycle air conditioner.

MIL-HDBK-1003/13A

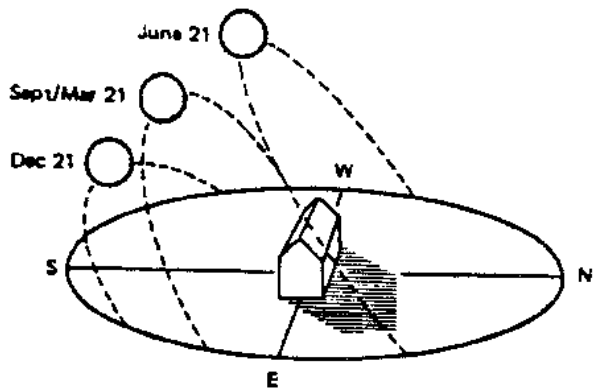

Figure 1-1. The sun's path across the sky at specific times of the year.

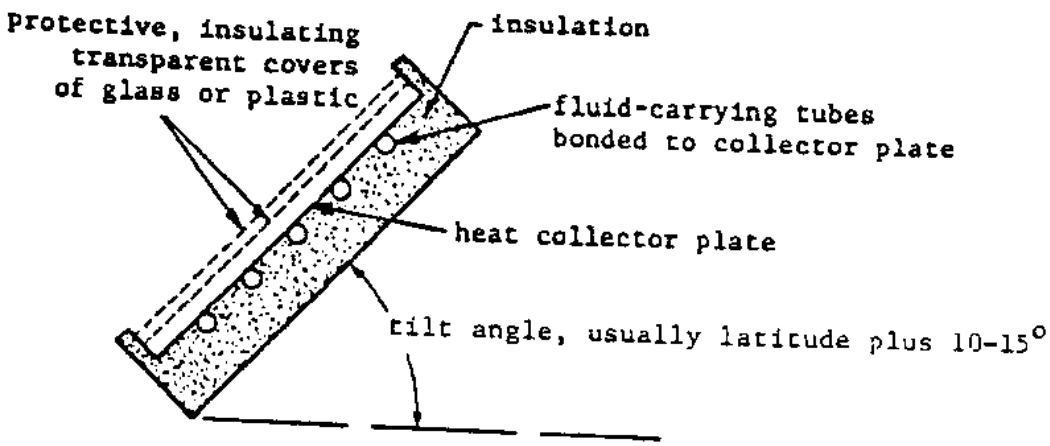

Figure 1-2. Schematic cross section of typical solar collector with heavy black insulation and two cover sheets.

specific times of the year and Schematic cross section of typical solar collector with heavy black insulation and two cover sheets.]

TABLE 1 1. Total Horizontal Solar Radiation Intensity (Btu/ft^2-day) (from Solar Energy Research Institute (1980).

STATE AND STATION	LATITUDE	JAN	FEB	MAR	APR	MAY	JUN	JUL	AUG	SEP	OCT	NOV	DEC	ANNUAL
ALABAMA														
Birmingham	33°34'N	706.6	967.1	1296.1	1673.5	1856.9	1918.5	1809.8	1723.8	1454.6	1210.8	857.9	661.4	1344.7
Mobile	30°41'N	828.2	1099.6	1407.5	1721.7	1872.1	1868.5	1715.3	1641.5	1449.4	1298.7	955.1	759.2	1384.7
Montgomery	32°18'N	751.7	1013.0	1340.6	1728.9	1897.4	1972.3	1841.0	1745.7	1467.7	1266.6	915.4	719.4	1387.9
ALASKA														
Adak	51°53'N	231.2	432.6	716.4	1032.6	1179.6	1182.0	1120.4	948.6	759.3	528.2	308.0	187.2	718.8
Annette	55° 2'N	177.9	374.7	717.1	1149.5	1473.1	1465.6	1439.2	1162.3	812.2	422.2	218.6	122.5	794.6
Barrow	71°18'N	0.0	73.8	490.5	1050.2	1140.0	1527.5	1459.1	855.8	414.3	125.7	3.6	0.0	595.0
Fairbanks	64°49'N	30.1	221.4	674.2	1193.9	1603.6	1751.9	1542.5	1118.0	709.4	292.6	74.1	2.5	767.8
Kodiak	57°45'N	149.3	355.9	781.9	1207.8	1376.3	1529.9	1408.2	1164.2	794.0	489.2	206.5	97.1	796.7
ARIZONA														
Phoenix	33°26'N	1021.3	1374.1	1814.1	2354.8	2676.5	2739.2	2486.5	2292.6	2015.4	1576.5	1150.5	932.0	1869.4
Tucson	32° 7'N	1099.0	1432.0	1864.3	2363.0	2673.4	2729.6	2341.1	2187.9	1978.8	1601.9	1208.4	995.8	1872.3
Yuma	32°40'N	1096.1	1443.2	1919.2	2412.8	2728.3	2813.9	2453.4	2329.3	2051.0	1622.8	1234.7	1000.1	1923.7
ARKANSAS														
Fort Smith	35°20'N	743.7	998.9	1311.7	1615.9	1912.1	2089.4	2065.3	1877.4	1501.5	1200.7	851.4	681.6	1404.1
Little Rock	34°44'N	731.3	1002.8	1312.7	1610.7	1929.3	2106.5	2032.3	1860.5	1518.0	1228.3	847.2	673.7	1404.4
CALIFORNIA														
Bakersfield	35°25'N	766.4	1101.9	1594.8	2094.7	2509.1	2749.3	2683.5	2420.7	1991.8	1458.3	942.3	677.4	1749.2
China Lake	35°41'N	909.4	1229.5	1734.9	2233.5	2548.5	2746.8	2612.2	2615.9	1979.7	1472.6	1033.7	840.8	1829.8
Daggett	34°52'N	958.2	1280.7	1772.3	2274.1	2593.2	2766.3	2603.4	2382.6	2007.9	1515.6	1085.1	876.0	1842.8
El Toro	33°40'N	947.0	1236.0	1610.2	1928.5	2070.2	2194.1	2363.4	2155.0	1737.3	1356.9	1026.4	869.2	1624.5
Fresno	36°46'N	656.7	1012.3	1565.8	2092.6	2483.8	2732.8	2685.1	2421.3	1985.1	1429.2	888.5	574.2	1710.8
Long Beach	33°49'N	927.7	1215.0	1609.9	1937.7	2064.5	2139.9	2299.9	2099.8	1701.0	1326.4	1003.5	846.8	1597.7
Los Angeles	33°56'N	926.1	1214.0	1618.7	1950.9	2059.6	2119.1	2307.5	2079.5	1681.4	1317.0	1003.9	848.5	1593.8
Oakland	37°44'N	707.8	1071.5	1456.3	1922.1	2211.3	2350.0	2322.5	2052.6	1701.1	1212.0	822.1	647.0	1535.2
Point Mugu	34° 7'N	927.2	1219.9	1635.7	1951.0	2018.0	2054.6	2118.3	1934.9	1607.7	1296.1	1006.4	856.2	1552.2
Sacramento	38°31'N	596.9	939.4	1458.4	2003.6	2434.8	2683.8	2688.0	2368.3	1906.7	1317.9	781.9	538.4	1642.9
San Diego	32°44'N	975.7	1266.3	1631.6	1936.7	2002.8	2062.2	2186.5	2057.3	1717.4	1373.3	1062.7	903.8	1598.0
San Francisco	37°37'N	707.6	1009.3	1455.1	1920.0	2225.6	2375.9	2391.6	2116.5	1742.0	1226.1	821.4	642.4	1552.8
Santa Maria	34°54'N	853.8	1140.9	1581.9	1921.0	2140.6	2348.6	2341.1	2105.7	1730.3	1353.4	973.6	803.9	1607.9
Sunnyvale	37°25'N	737.6	1037.5	1485.3	1943.8	2276.8	2452.8	2441.3	2167.1	1759.5	1248.4	843.1	660.3	1587.8

Table 1-1

(Btu/ft[2]-day) from Solar Energy Research Institute (1980).]

Table 1-1. Total Horizontal Solar Radiation Intensity (Btu/ft^2-day) from Solar Energy Research Institute (1980). (Continued)

STATE AND STATION	LATITUDE	JAN	FEB	MAR	APR	MAY	JUN	JUL	AUG	SEP	OCT	NOV	DEC	ANNUAL
COLORADO														
Colorado Springs	38°49'N	890.7	1178.2	1550.0	1931.2	2128.7	2368.9	2211.8	2025.4	1759.1	1358.6	944.2	781.9	1594.1
Denver	39°45'N	840.1	1127.0	1530.4	1879.3	2134.9	2350.7	2272.6	2044.1	1726.8	1300.5	883.5	731.8	1568.4
Grand Junction	39° 7'N	791.3	1119.0	1553.5	1986.4	2379.8	2598.5	2465.2	2182.0	1834.4	1345.0	918.1	731.3	1658.7
CONNECTICUT														
Hartford	41°56'N	477.5	714.7	978.5	1315.0	1568.5	1685.0	1649.0	1421.7	1154.5	852.9	497.3	385.1	1058.3
CUBA														
Guantanamo Bay	19°54'N	1403.0	1648.1	1926.3	2120.0	2037.6	1960.8	2082.4	2002.5	1824.0	1584.6	1431.8	1313.0	1777.9
DELAWARE														
Wilmington	39°40'N	571.4	827.0	1149.2	1480.1	1710.2	1882.6	1822.8	1614.6	1317.7	983.9	644.9	488.6	1207.7
DISTRICT OF COLUMBIA														
Washington/Sterling	38°57'N	572.0	815.3	1125.0	1458.9	1718.1	1900.9	1817.5	1617.4	1340.0	1003.8	650.9	481.1	1208.4
FLORIDA														
Apalachicola	29°44'N	852.9	1125.9	1474.0	1878.9	2090.6	1998.3	1813.6	1687.5	1535.4	1371.4	1040.1	817.6	1473.8
Jacksonville	30°30'N	899.9	1164.3	1521.7	1855.7	1956.3	1885.2	1802.0	1694.2	1442.3	1223.1	996.0	817.6	1438.2
Miami	25°48'N	1057.4	1314.0	1603.3	1859.0	1843.6	1707.9	1763.4	1629.8	1456.3	1302.7	1118.6	1019.1	1472.9
Tampa	27°58'N	1010.7	1259.4	1593.7	1908.5	1998.2	1847.4	1752.7	1653.1	1492.0	1346.4	1107.8	935.4	1492.3
GEORGIA														
Atlanta	33°39'N	717.6	968.9	1303.6	1686.2	1853.8	1913.8	1812.2	1708.5	1422.0	1199.9	882.9	674.2	1345.3
Augusta	33°22'N	751.0	1015.2	1338.3	1728.4	1865.1	1903.7	1803.5	1667.1	1409.6	1219.6	916.5	720.9	1361.6
Savannah	32° 8'N	794.7	1043.8	1398.5	1761.4	1852.3	1844.3	1783.5	1620.9	1363.7	1216.7	941.1	753.7	1364.5
HAWAII														
Barbers Point	21°19'N	1207.7	1441.0	1645.1	1833.5	1972.5	2024.5	2018.3	1971.1	1814.7	1554.8	1299.4	1165.7	1662.4
Hilo	19°43'N	1119.8	1246.2	1348.6	1434.8	1553.0	1658.5	1624.5	1592.4	1546.8	1372.1	1104.9	1019.3	1385.1
Honolulu	21°20'N	1179.8	1396.3	1621.7	1795.8	1949.3	2004.4	2002.2	1966.5	1810.1	1540.3	1266.1	1132.5	1638.7
Lihue	21°59'N	1103.0	1299.7	1475.6	1640.7	1824.0	1867.8	1862.5	1818.1	1742.4	1449.4	1154.2	1053.1	1524.2
IDAHO														
Boise	43°34'N	485.3	839.7	1304.1	1826.9	2276.7	2463.2	2612.7	2196.5	1737.2	1137.8	628.3	437.2	1495.5
Lewiston	46°23'N	339.7	609.0	1019.6	1435.0	1842.5	2014.8	2335.8	1931.3	1434.6	859.8	412.8	286.1	1210.1
ILLINOIS														
Chicago	41°47'N	507.0	759.5	1106.9	1459.0	1788.9	2007.0	1943.8	1719.4	1353.9	968.9	565.6	401.5	1215.1
Springfield	39°50'N	584.7	860.9	1143.0	1515.0	1865.5	2096.7	2058.2	1805.8	1453.9	1068.3	676.6	490.1	1301.5

Table 1-1 Con't

(Btu/ft^2-day) from Solar Energy Research Institute (1980). (Continued)]

Table 1-1. Total Horizontal Solar Radiation Intensity (Btu/ft^2-day) from Solar Energy Research Institute (1980). (Continued)

STATE AND STATION	LATITUDE	JAN	FEB	MAR	APR	MAY	JUN	JUL	AUG	SEP	OCT	NOV	DEC	ANNUAL
INDIANA														
Evansville	38° 3'N	574.1	823.2	1151.0	1500.8	1782.8	1982.7	1920.3	1735.1	1403.3	1087.0	682.5	498.7	1261.8
Indianapolis	39°44'N	495.6	746.9	1037.4	1398.4	1688.0	1868.1	1806.3	1643.5	1324.0	977.0	579.1	416.6	1165.0
South Bend	41°42'N	415.7	659.6	992.5	1387.4	1722.5	1921.9	1852.4	1666.3	1291.3	909.2	497.1	340.3	1138.0
IOWA														
Des Moines	41°42'N	580.7	860.7	1180.5	1556.6	1867.5	2124.8	2096.8	1827.9	1433.9	1067.8	658.3	486.9	1311.8
Mason City	43° 9'N	553.7	836.2	1168.0	1518.6	1895.3	2113.8	2084.2	1832.8	1405.4	1010.5	599.9	443.2	1288.5
KANSAS														
Dodge City	37°46'N	826.6	1122.0	1476.4	1885.8	2089.7	2358.2	2295.5	2055.3	1686.7	1300.7	893.7	731.9	1560.2
Topeka	39° 4'N	680.9	941.0	1256.9	1641.6	1915.4	2126.4	2127.9	1910.0	1516.4	1146.6	771.6	583.5	1384.8
KENTUCKY														
Lexington	38° 2'N	545.9	779.5	1099.5	1479.2	1747.0	1897.1	1850.4	1685.3	1362.1	1044.2	657.3	485.5	1219.4
Louisville	38°11'N	545.5	789.3	1102.0	1466.7	1719.8	1903.5	1837.5	1680.2	1361.2	1042.2	652.8	487.9	1215.7
LOUISIANA														
Lake Charles	30° 7'N	728.4	1009.8	1313.4	1570.4	1849.4	1970.3	1787.7	1657.4	1485.2	1381.1	916.6	705.6	1364.6
New Orleans	29°59'N	834.4	1111.9	1414.8	1780.3	1967.7	2003.8	1813.5	1716.6	1513.6	1335.0	972.6	779.4	1437.0
Shreveport	32°28'N	762.3	1038.4	1341.5	1612.8	1886.2	2064.8	2013.9	1877.1	1553.9	1303.5	928.6	730.6	1426.1
MAINE														
Caribou	46°52'N	419.3	724.0	1133.1	1414.2	1577.8	1757.4	1762.4	1500.7	1102.6	688.3	366.4	310.5	1063.1
Portland	43°39'N	450.3	681.9	969.6	1303.9	1567.4	1711.6	1659.1	1460.9	1157.8	822.4	459.3	362.9	1050.6
MARYLAND														
Baltimore	39°11'N	586.9	840.0	1162.2	1487.9	1713.9	1879.1	1873.2	1599.5	1330.3	997.6	660.3	499.3	1215.0
MASSACHUSETTS														
Boston	42°22'N	475.5	709.6	1016.4	1325.8	1620.5	1817.1	1749.2	1486.5	1259.9	889.6	502.9	403.0	1104.7
MICHIGAN														
Detroit	42°25'N	417.4	680.4	1000.2	1399.0	1715.9	1866.1	1835.4	1575.5	1253.2	876.1	477.8	343.5	1120.0
Grand Rapids	42°53'N	369.6	648.3	1014.4	1411.9	1755.2	1956.5	1914.4	1676.3	1262.1	857.8	455.7	310.7	1135.3
Sault Ste. Marie	46°28'N	324.8	603.3	1028.6	1383.3	1688.1	1810.8	1835.1	1522.7	1049.1	673.0	331.7	252.9	1041.9
MINNESOTA														
Duluth	46°50'N	388.6	672.8	1034.5	1372.8	1642.6	1767.2	1854.3	1546.9	1095.0	724.8	380.7	291.7	1064.3
Minneapolis/St. Paul	44°53'N	464.0	763.9	1103.5	1441.9	1737.3	1927.5	1970.0	1687.0	1254.7	859.6	480.4	353.3	1170.2
MISSISSIPPI														
Jackson	32°19'N	753.5	1026.4	1369.1	1708.4	1940.8	2024.2	1909.0	1780.5	1509.2	1271.4	901.6	708.8	1408.6

Table 1-1 Con't

(Btu/ft└2┘-day) from Solar Energy Research Institute (1980). (Continued)]

Table 1-1. Total Horizontal Solar Radiation Intensity (Btu/ft^2-day) from Solar Energy Research Institute (1980). (Continued)

STATE AND STATION	LATITUDE	JAN	FEB	MAR	APR	MAY	JUN	JUL	AUG	SEP	OCT	NOV	DEC	ANNUAL
MISSOURI														
Columbia	38°49'N	611.5	874.8	1178.8	1525.9	1879.8	2089.5	2116.1	1877.9	1450.4	1100.8	702.7	522.5	1327.6
Kansas City	39°18'N	647.9	894.7	1202.9	1575.0	1872.6	2079.6	2102.1	1862.4	1452.4	1092.3	737.3	561.5	1340.0
St. Louis	38°45'N	627.4	885.6	1204.7	1564.2	1871.3	2092.5	2049.5	1816.5	1459.2	1099.8	718.3	530.6	1326.6
MONTANA														
Billings	45°48'N	468.0	763.2	1189.5	1526.3	1912.8	2173.7	2383.7	2022.4	1470.0	986.8	561.4	421.2	1324.7
Great Falls	47°29'N	420.5	720.2	1170.4	1488.7	1847.6	2101.4	2329.0	1933.0	1378.5	924.6	497.6	336.2	1262.3
Missoula	46°55'N	311.8	574.2	981.5	1382.2	1782.5	1933.0	2327.5	1880.9	1357.8	812.5	410.2	267.2	1168.5
NEBRASKA														
North Omaha	41°22'N	634.0	892.1	1222.5	1558.4	1872.6	2122.5	2106.5	1858.5	1373.2	1049.8	644.1	511.2	1320.5
Scottsbluff	41°52'N	675.7	950.5	1307.4	1668.0	1933.2	2236.6	2283.7	1999.5	1598.9	1145.0	723.2	575.1	1424.7
NEVADA														
Elko	40°50'N	688.9	1034.4	1463.0	1899.7	2303.3	2533.7	2622.9	2315.9	1892.6	1322.5	812.1	617.0	1625.5
Las Vegas	36° 5'N	978.0	1339.5	1823.5	2111.0	2646.3	2777.8	2588.4	2354.8	2037.3	1539.8	1085.5	880.5	1864.2
Reno	39°30'N	800.4	1149.9	1649.4	2159.3	2523.1	2701.4	2692.1	2405.7	1997.7	1431.0	912.3	705.5	1760.7
NEW HAMPSHIRE														
Concord	43°12'N	459.5	686.1	973.6	1371.1	1582.2	1704.6	1674.6	1455.3	1140.2	817.1	462.7	362.1	1053.0
NEW JERSEY														
Newark	40°42'N	551.7	793.0	1108.7	1448.6	1687.1	1795.3	1759.9	1564.8	1272.9	950.9	596.2	454.4	1165.3
NEW MEXICO														
Albuquerque	35° 3'N	1016.5	1342.0	1767.6	2228.4	2538.1	2678.9	2488.6	2290.1	1971.7	1546.7	1133.7	927.7	1827.5
Farmington	36°45'N	944.5	1280.9	1693.4	2132.9	2451.6	2645.5	2478.2	2252.1	1934.3	1478.7	1047.2	837.1	1766.3
Roswell	33°24'N	1046.5	1372.7	1807.4	2217.6	2459.2	2630.3	2440.6	2241.8	1913.0	1527.1	1131.4	951.0	1810.0
NEW YORK														
Albany	42°45'N	456.5	688.4	985.9	1335.2	1569.9	1729.9	1724.9	1498.9	1170.3	817.3	457.1	355.9	1065.8
Buffalo	42°56'N	348.9	546.4	880.5	1314.9	1596.5	1803.7	1776.4	1513.2	1151.8	784.4	403.4	283.3	1034.3
New York City (La Guardia)	40°46'N	576.6	794.5	1117.6	1456.6	1690.4	1801.9	1784.1	1583.2	1280.1	950.6	593.0	456.8	1171.4
NORTH CAROLINA														
Cape Hatteras	35°16'N	685.6	952.2	1326.4	1773.9	1961.8	2035.9	1920.6	1705.4	1470.4	1136.6	872.9	658.7	1375.0
Greensboro	36° 5'N	715.3	970.0	1313.2	1683.2	1868.0	1953.1	1863.6	1696.6	1417.6	1141.6	839.2	658.7	1343.3

Table 1-1 Con't

(Btu/ft^2-day) from Solar Energy Research Institute (1980). (Continued)]

Table 1-1. Total Horizontal Solar Radiation Intensity (Btu/ft^2-day) from Solar Energy Research Institute (1980). (Continued)

STATE AND STATION	LATITUDE	JAN	FEB	MAR	APR	MAY	JUN	JUL	AUG	SEP	OCT	NOV	DEC	ANNUAL
NORTH DAKOTA														
Bismarck	46°46'N	466.8	775.7	1168.1	1459.3	1848.1	2059.8	2183.6	1876.7	1354.5	907.8	507.3	372.9	1248.4
Minot	48°16'N	383.7	659.9	1044.3	1460.6	1846.4	1974.8	2097.6	1800.4	1277.0	849.6	438.5	310.0	1178.3
OHIO														
Cincinnati (Covington, KY)	39° 4'N	500.5	738.4	1027.3	1398.5	1672.4	1837.1	1770.9	1634.4	1331.6	989.8	588.5	432.5	1158.5
Cleveland	41°24'N	388.4	601.1	922.3	1349.5	1681.1	1843.3	1827.9	1582.6	1239.5	867.0	466.1	317.9	1090.6
OKLAHOMA														
Oklahoma City	35°24'N	800.9	1055.0	1400.1	1725.4	1918.1	2143.9	2128.4	1950.3	1554.2	1232.6	901.0	725.4	1461.3
OREGON														
Medford	42°22'N	406.9	737.4	1132.6	1638.7	2033.7	2277.8	2475.5	2120.6	1589.0	981.9	504.3	336.3	1352.9
Pendleton	45°41'N	348.1	613.6	1043.6	1502.7	1925.5	2144.3	2395.7	1994.0	1502.2	908.1	438.4	293.0	1259.1
Portland	45°36'N	310.0	544.1	895.0	1307.7	1663.2	1772.5	2037.3	1673.7	1216.7	723.6	387.5	259.8	1066.8
PACIFIC ISLANDS														
Koror Island	7°20'N	1397.0	1558.6	1630.9	1691.7	1567.6	1455.5	1442.3	1482.8	1526.8	1506.7	1448.8	1338.8	1503.9
Kwajalein Island	8°44'N	1573.9	1751.9	1769.3	1740.4	1626.8	1610.4	1609.7	1687.1	1615.5	1525.1	1458.4	1450.4	1620.5
Wake Island	19°17'N	1349.3	1572.0	1811.3	1954.3	2054.6	2046.3	1924.5	1871.9	1783.5	1570.7	1436.8	1310.9	1720.1
PENNSYLVANIA														
Philadelphia	39°53'N	555.3	794.5	1108.2	1433.9	1659.9	1811.2	1758.1	1574.5	1281.4	958.5	619.3	470.4	1168.7
Pittsburgh	40°30'N	424.4	625.3	942.6	1316.6	1601.7	1761.6	1689.2	1510.4	1208.9	895.0	504.7	346.8	1068.9
PUERTO RICO														
San Juan	18°26'N	1325.6	1535.9	1787.9	1890.9	1812.9	1817.0	1873.7	1838.2	1674.5	1515.3	1367.7	1235.8	1639.6
RHODE ISLAND														
Providence	41°44'N	506.2	738.5	1031.8	1373.9	1655.1	1775.5	1695.4	1498.6	1208.8	906.7	537.5	418.5	1132.2
SOUTH CAROLINA														
Charleston	32°54'N	744.2	995.3	1338.6	1732.3	1860.2	1843.9	1789.9	1585.3	1394.1	1192.7	934.1	720.7	1345.1
Greenville/ Spartanburg	34°54'N	729.6	981.9	1328.5	1697.3	1838.9	1918.2	1830.1	1699.2	1405.6	1180.0	880.3	670.3	1346.6
SOUTH DAKOTA														
Rapid City	44° 3'N	542.3	826.5	1278.8	1589.1	1887.0	2131.2	2223.0	1962.7	1517.9	1063.6	646.7	476.4	1341.3
Sioux Falls	43°34'N	532.6	802.1	1152.2	1542.9	1893.7	2099.9	2146.6	1844.5	1409.8	1005.3	607.5	441.3	1290.2

Table 1-1 Con't

(Btu/ft└2┘-day) from Solar Energy Research Institute (1980). (Continued)]

Table 1-1. Total Horizontal Solar Radiation Intensity (Btu/ft^2-day) from Solar Energy Research Institute (1980). (Continued)

STATE AND STATION	LATITUDE	JAN	FEB	MAR	APR	MAY	JUN	JUL	AUG	SEP	OCT	NOV	DEC	ANNUAL
TENNESSEE														
Memphis	35° 3'N	682.7	944.8	1278.3	1638.7	1884.9	2044.6	1972.0	1824.0	1470.9	1204.5	816.7	628.6	1365.9
Nashville	36° 7'N	579.6	823.8	1129.8	1543.6	1824.8	1963.0	1891.1	1736.9	1397.9	1113.8	711.3	520.6	1269.7
TEXAS														
Amarillo	35°14'N	960.2	1243.5	1630.8	2019.1	2211.7	2393.1	2280.5	2103.1	1760.5	1403.5	1032.9	871.6	1659.2
Austin	30°18'N	864.5	1124.6	1428.9	1605.1	1833.6	2072.0	2105.5	1931.3	1606.1	1333.3	986.7	825.1	1476.4
Corpus Christi	27°46'N	898.1	1147.4	1429.9	1642.4	1866.4	2093.8	2186.1	1990.8	1687.0	1416.3	1042.7	844.7	1520.5
Dallas	32°51'N	821.5	1071.1	1421.8	1626.8	1888.5	2134.9	2122.1	1950.2	1587.1	1276.1	936.4	780.1	1468.1
El Paso	31°48'N	1125.1	1480.1	1909.3	2363.5	2600.6	2682.5	2450.1	2284.5	1987.1	1639.0	1243.7	1030.7	1899.7
Houston	29°59'N	772.4	1034.2	1297.4	1522.3	1774.9	1898.1	1828.1	1686.2	1471.0	1275.6	924.0	729.6	1351.1
UTAH														
Cedar City	37°42'N	882.4	1179.8	1635.6	2092.4	2467.3	2705.8	2503.3	2241.3	1968.4	1459.7	992.4	785.5	1742.8
Salt Lake City	40°46'N	639.1	988.7	1454.3	1894.3	2362.4	2560.9	2560.1	2253.6	1893.3	1293.3	787.9	569.8	1603.1
VERMONT														
Burlington	44°28'N	385.3	606.8	940.2	1296.2	1574.1	1728.9	1721.1	1475.0	1122.2	740.5	374.6	283.2	1020.7
VIRGINIA														
Norfolk	36°54'N	678.3	931.9	1280.9	1676.7	1887.5	2000.3	1853.2	1680.2	1395.6	1083.0	811.3	623.8	1325.2
Richmond	37°30'N	631.9	877.1	1210.4	1566.0	1762.0	1872.4	1774.4	1600.6	1347.9	1032.7	733.0	566.7	1248.0
Roanoke	37°19'N	660.5	899.4	1236.1	1581.5	1763.9	1881.9	1796.2	1620.2	1358.2	1080.2	764.7	590.8	1269.5
WASHINGTON														
Seattle/Tacoma	47°27'N	261.7	495.0	849.4	1293.5	1713.9	1801.8	2248.2	1616.3	1147.7	656.2	337.2	211.1	1052.7
Spokane	47°38'N	315.0	605.9	1040.6	1494.9	1918.0	2082.8	2357.4	1942.0	1435.3	840.9	397.7	255.2	1223.8
WEST VIRGINIA														
Charleston	38°22'N	498.4	706.5	1009.5	1355.7	1639.4	1775.9	1682.5	1514.3	1272.0	972.3	613.1	440.1	1123.3
WISCONSIN														
Green Bay	44°29'N	451.2	724.9	1104.2	1438.6	1719.3	1907.8	1888.5	1621.8	1218.0	820.6	465.1	349.7	1142.5
Madison	43° 8'N	515.2	804.0	1136.0	1398.4	1743.2	1947.9	1934.4	1708.1	1299.4	910.9	504.2	388.9	1190.9
Milwaukee	42°57'N	479.4	736.5	1088.8	1442.7	1768.4	1977.1	1941.8	1719.0	1310.3	907.9	524.6	378.4	1191.2
WYOMING														
Cheyenne	41° 9'N	765.8	1067.8	1433.1	1770.5	1994.6	2258.0	2229.0	1965.5	1667.4	1241.8	822.8	671.0	1490.7
Rock Springs	41°36'N	735.0	1089.4	1530.1	1943.9	2344.3	2574.4	2547.2	2240.2	1832.5	1305.9	826.3	650.6	1635.0

Table 1-1 Con't

(Btu/ft^2-day) from Solar Energy Research Institute (1980). (Continued)]

The amount of solar energy collected by a solar collector depends on its efficiency, which is determined by how it is constructed, its configuration, and the choice of materials used. Standards are available as given in Section 1.2 which can test the instantaneous efficiency of a solar collector for a specified set of operating conditions.

Other parameters, not related to the physical characteristics of a solar collector, can affect performance. The atmosphere reduces the radiation received on the earth's surface and is also responsible for the scattering of light which results in diffuse, as distinct from direct, solar radiation. The diffuse component may represent as much as 25%-30% of the total solar radiation depending on the weather conditions. Cloudy days are virtually 100% diffuse solar energy. Solar flat plate collectors absorb heat from the diffuse component as well as the direct. Thus, some heat is available on partly cloudy days. The reflectance of the ground (snow, sand, water, etc.) or nearby objects may also influence the amount of solar energy reaching a collector. Therefore, the amount of solar energy received at any location depends on the hour of the day, the day of the solar year, and the meteorological conditions. This amount can vary from about 50 Btu/ft^2-hr on a foggy winter day to as much as 300-375 Btu/ft^2-hr on a typical sunny summer day.

1.3.3 Solar collector orientation. Even though solar collectors can collect heat from the diffuse component of solar radiation, solar systems are designed to use the direct component. Direct radiation is in the form of parallel rays coming straight from the sun. To best capture this energy the solar collector should be tilted as shown in Figure 1-2 so that it is more nearly perpendicular to the solar rays. The "optimum" tilt angle varies even as the sun changes its position throughout the day and year. However, since the solar system cannot be continuously moved, some general rules can be stated:

a. For all year domestic hot water (DHW) heating use a tilt angle equal to the latitude.
b. For all year DHW heating and winter space heating, use a tilt angle equal to the latitude plus 10-15 degrees.
c. For all year DHW heating, winter space heating, and summer cooling use same as (a).
d. For winter only space heating use a tilt angle equal to the latitude plus 10-15 degrees.
e. For summer space cooling use a tilt angle equal to the latitude minus 10-15 degrees.
f. For summer only space cooling and all year DHW heating use the same as (e).

In addition to choosing the best collector tilt angle, consideration must be given to the orientation of a collector (i.e., the direction the collector faces). Normally true south is the best and most frequent choice. However, slightly west of south (10 degrees) may be preferable in some locations if an early morning haze or fog is a regular occurrence.

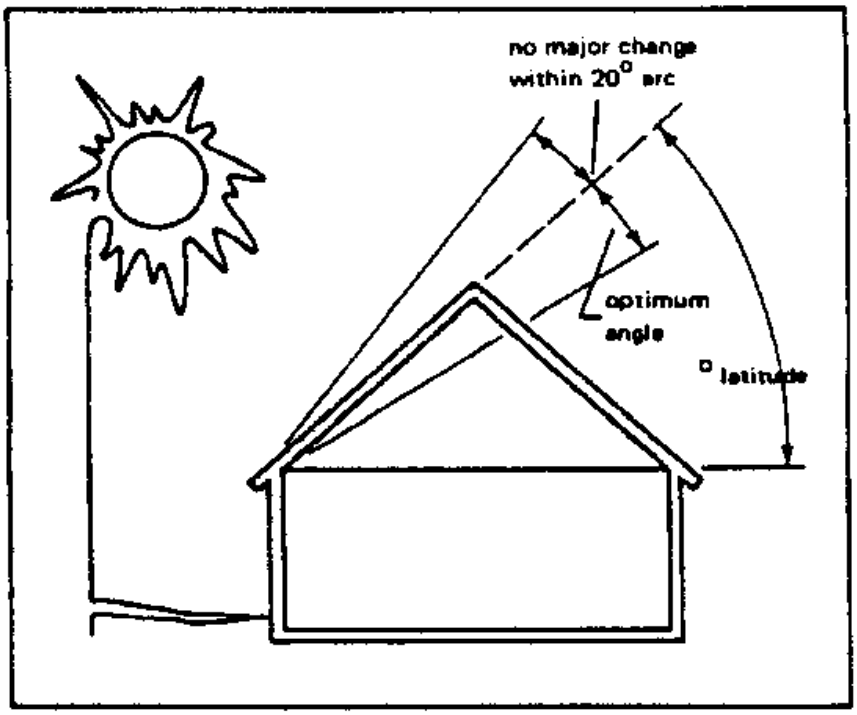

Figure 1-3. Collector tilt for domestic hot water (usually = latitude, but 10-degree variations either side of optimum are acceptable).

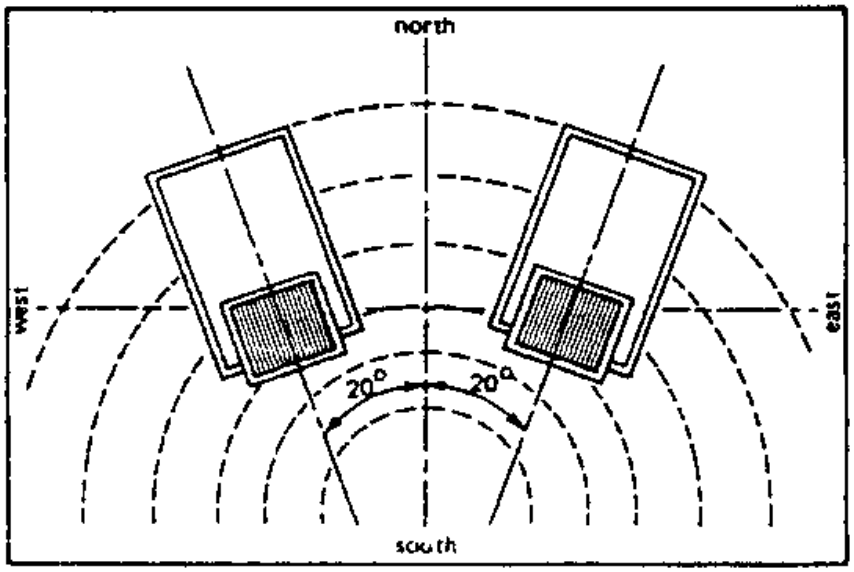

Figure 1-4. Collector orientation (optimum = true south, but 20-degree variations to either side are acceptable; local climate and collector type may influence orientation).

(usually = latitude, but 10-degree variations either side of optimum are acceptable) and Collector orientation optimum = true south, but 20-degree variations to either side are acceptable, local climate and collector type may influence orientation.]

Some deviations from these tilt and orientation angles are allowable without significantly affecting performance. As shown in Figures 1-3 and 1-4, the tilt angle may vary +/- 10 degrees and the orientation angle up to 20 degrees either side of true south (National Solar Heating and Cooling Info Center, 1979). For these deviations the solar collectors would still collect 95%-100% of their rated capacity in most locations of the U.S. Additional deviations would require more collector area to capture the same amount of energy. As a very approximate rule of thumb, for each deviation of 10 degrees beyond that shown in Figures 1-3 and 1-4 add 10% more collector area. If you must choose between an east roof and a west roof, use the west roof in the western coastal area. Other areas will require local weather considerations.

As important as collector location, is keeping the collectors out of the shade, especially between 9 a.m. and 3 p.m., when most of the useful energy collection occurs. The designer should try to anticipate any future structures or vegetation (trees) that could block future solar access. In summary, although many buildings will not have a "perfect" solar orientation, there can still be many places with good solar energy potential.

1.3.4 Advantages and disadvantages. Solar energy is inherently nonpolluting, provides substantial freedom from the effects of fuel price increases, and saves valuable fossil fuels. Disadvantages are that collectors perform poorly in cold cloudy weather, when most needed; and room heat exchangers and industrial unit heaters must be larger than in conventional systems due to the relatively low temperature of heating fluid. The disadvantages may be circumvented by good design; where fuel costs are high enough (as discussed in the examples, Section 4), a solar system will prove cost effective. Solar systems designed for combined heating and cooling will utilize the collector all year and thus are potentially more cost effective.

2.0 SOLAR SYSTEM COMPONENTS.

This section will cover in detail the typical components of a flat plate solar collector as shown previously in Figure 1-2.

2.1 Collectors. The collector is the most important and one of the most expensive parts of a solar heating system. It must be long-lived and well insulated, yet its cost must be minimized. Collectors of primary interest for space and water heating are of two basic types: liquid and air. Liquids may be water, an antifreeze mixture, or various hydrocarbon and silicone heat transfer oils. Air-type collectors use air as the collector fluid. The absorber plate is that part of the collector which absorbs the solar energy and converts it to thermal energy. A portion of the thermal energy is carried to the building or thermal storage unit by the fluid which circulates through passages in the absorber plate. The absorber plates can be made of metal, plastic, or rubber compounds. The metals commonly used in order of decreasing thermal conductivity are copper, aluminum, and steel. Plastics (polyolefins) and rubbers (ethylene propylene compounds) are relatively inexpensive, but due to their low thermal conductivity and their temperature limitations, they are suitable only for low temperature applications, such as heating swimming pool water or for use with water source heat pumps. Typical cross sections of solar collector types are shown in Figure 2-1.

Other major components of a solar collector include:

a. Absorber plate coating - To enhance the heat transfer and protect the absorber plate.
b. One or more transparent covers - To reduce thermal losses by radiation (using the "greenhouse effect") and by convection (wind, etc.). Spacings are nominally 1/2 inch or more.
c. Insulation - One to three inches are used to reduce heat loss through the side and back of the absorber plate.
d. Collector box or housing - To provide a rigid mounting to hold the components. Must be weatherproofed.
e. Gaskets and seals - To insure a weathertight seal between components while allowing thermal expansion of the components. Normally these seals remain ductile to accomplish their purpose.

Flat-plate collectors are most suitable for low temperature applications such as domestic hot water and space heating. They collect both direct and diffuse radiation. It is not required that they track the sun, thus initial cost and maintenance are minimized. A properly designed flat-plate collector has a life expectancy of 10 to 25 years, or sometimes longer. All copper and glass systems currently exhibit the longest lives. Using softened water will help. Tubes should be 1/2 inch in diameter or greater for low pressure drop and longer life. The better the attachment of tube-to-plate (such as by soldering), the better the heat transfer, but the greater the manufacturing cost.

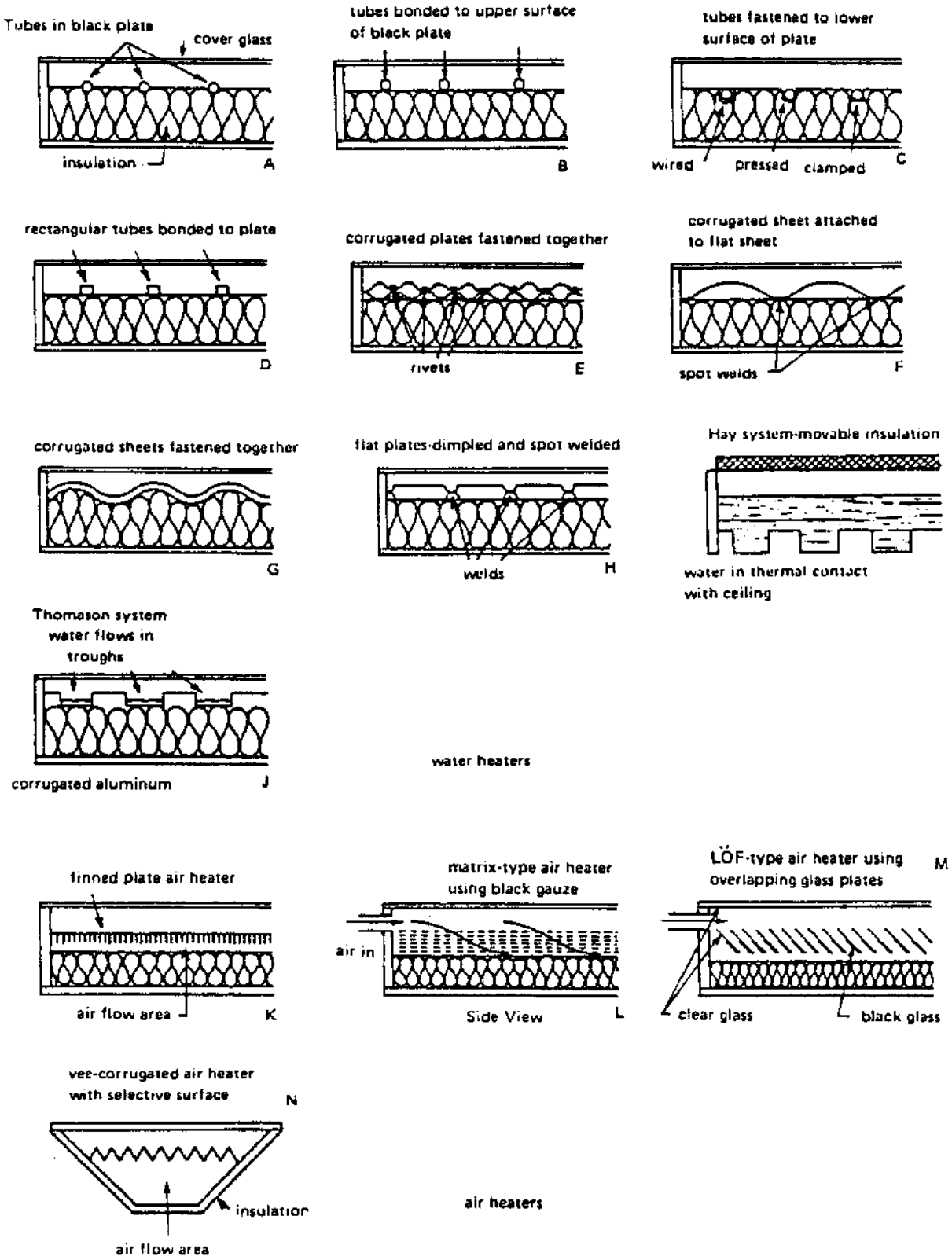

Figure 2-1. Types of solar heat collectors.

Advances in collector cost reduction will probably be made in the direction of cheaper manufacturing processes. Some collectors not made from tube and sheet may not tolerate DHW line pressures. Specifications for pressurized collector circuits should require collectors which will take proof test pressure equal to 150% of expected circuit pressure.

In hot climates, it is important to reduce roof heat load due to collector heat gain in summer; this can be accomplished by venting the space between collector plate and glazes with dampers or by covering the collectors. A normal amount of dirt and dust on the glass cover will reduce heat collected by about 5%. Normal rainfall is usually sufficient to relieve this problem. Except for warm climates with high insolation (I > / - 1400 Btu/ft└2┘-Day), two cover glasses may be optimum (see Section 2.1.3). In warm climates, one glass is optimum. Many plastics have an undesirable transparency to infrared radiation, to which glass is nearly opaque, so the desired "greenhouse effect" is not so pronounced with plastic materials as with glass. However, losses by radiation from the collector are small compared with convective losses due to wind; thus plastics can be employed to reduce breakage and cost, but with some loss in collector performance. Plastics with maximum opaqueness to infrared and maximum transparency to ultraviolet (UV) and visible radiation and with high resistance to UV degradation should be specified. Collector orientation should follow the guidelines given in Section 1.3.3. Collector sizing will be given in Section 3.0. The following sections give more detailed information on collector designs and components.

2.1.1 Liquid and air-type collectors. Liquid and air type collectors each have some advantages which are summarized in Table 2-1 (Kimbell, 1978). Liquid types are more suited to DHW, the collector area is usually smaller, and more information is available about liquid systems. Collectors for heating air do not require protection from freezing and have minimal corrosion problems, leaks do not cause serious damage, they may cost less per unit area, and are better suited to direct space heating for residences where duct-work is already present. However, since leaks in air systems are less easily detected, they can degrade system performance if not corrected. Wherever this manual discusses liquid collectors, air collectors are included, and cost analyses apply equally to both. The design procedure for air collectors differs, however. Heat transfer oils used in liquid systems offer freeze protection and some corrosion protection, but they also require heat exchangers for heating domestic hot water, as do antifreeze-water mixtures.

2.1.2 Selective surfaces. Some collectors are manufactured with a black coating which absorbs the high frequency incoming solar radiation very well and which emits low frequency infrared radiation poorly. This is a highly desirable combination of properties for a collector. The absorptance should be 0.9 or higher and emittance may be 0.1 or lower. Such coatings are approximately equal in effect to one cover glass. Thus, a selective coating plus one cover glass may be expected to be about equal in efficiency to a collector with two cover glasses and a flat black painted surface.

Table 2-1. Advantages and Disadvantages of Air and Liquid Heating Systems.

Air	
Advantages	Disadvantages
Moderate cost No freezing or corrosion problems. Minor leaks cause little or no damage. As air is used directly to heat the house, no temperature losses due to heat exchangers (devices which transfer heat from one fluid to another), when the system is used for space hat. No boiling or pressure problems.	Can only be used to heat homes; cannot presently be economically adapted to cooling. Large air ducts needed. Fan power is required. Large storage space needed for rocks. Heat exchangers needed if system is to be used to heat water. Undetected leaks can degrade system performance. Possible fungus or algae growths in rock beds. Long term effects unknown. Washing rock can be difficult.
Water or Liquid	
Advantages	Disadvantages
Holds and transfers heat well. Water can be used as storage. Can be used to both heat and cool homes. Compact storage and small conduits. Compatible with hydronic heating systems. Pumps are quieter and more effective than fans.	Leaking, freezing, and corrosion can be problems. Corrosion inhibitors needed with water when using steel or aluminum. There are liquids which are noncorrosive and nonelectrolytic; however, they are toxic and some of them are flammable. A separate collector loop using a nonfreezing fluid and heat exchanger. Or, alternatively, a water draining or inhibited water system, are required to prevent freezing. In warm regions, where freezing is infrequent, electric warmers or recirculation can be used. May require excess heat protection.

Electroplated black nickel, black chrome, copper oxide or anodized aluminum are common types of selective coatings. Cost of selective surface coatings may be greater than an extra sheet of glass, but much research is being done to produce low cost, easily applied coatings. The stability of black nickel, chrome and aluminum in the presence of moisture has not yet been proven.

Longterm stability in the presence of moisture or other expected environmental factors (salt air, etc.) must be included in specifications for selective surfaces. Table 2-2 is a summary of absorber coatings both selective and nonselective.

2.1.3 Collector covers (glazes). The transparent covers serve to admit solar radiation to the absorber while reducing convection and radiation heat losses from the collector. The covers also protect the absorber from dirt, rain, and other environmental contaminants.

The material used for covers include glass and/or plastic sheets. Glass is most commonly used because of its superior optical properties and durability. Standard plate glass reflects about 8% and absorbs about 6% of normal incident solar radiation, resulting in a transmissivity of about 86%. Yet it is essentially opaque to long-wave thermal radiation from the absorber. Transmission of solar radiation into the collector can be increased by minimizing the reflectance and the absorptance of the glass covers. Absorptance of solar radiation by the collector can be increased with the use of thinner tempered glass and by using glass that has a low iron content. Although glass is subject to impact damage and is more expensive than plastic, it does not degrade in sunlight or at high collector temperatures, and is generally considered to be more durable than plastic. Impact damage may be reduced with the use of tempered glass and small collector widths. Also 1/2-inch wire mesh may be hung over glass covers for protection, but the effective absorber area will be reduced by approximately 15%. In general, screens are not recommended.

Most plastic covers transmit the solar spectrum as well or better than glass glazing. Unfortunately, they transmit infrared radiation well also, increasing radiation losses from the collector. Table 2-3 compares the different characteristics of glass and plastic covers (Montgomery, 1978).

Although resistant to impact damage, plastics generally degrade in sunlight and are limited as to the temperatures they can sustain without undergoing serious deformation. Often they do not lie flat, resulting in a wavy appearance. In general, acrylic is the most UV resistant and FRP Plastics offer good impact and high temperature properties. Teflon FEP film has good transmittance and high temperature properties, but is limited in strength. Some collectors using plastic covers are designed to have stagnation temperatures no higher than 200 deg. - 275 deg. F. However, plastic covers have been developed to withstand 400 deg. F. The manufacturer should be consulted.

TABLE 2-2. Characteristics of Absorber Coatings (U.S. Dept. of HUD, 1977). [Selective Coatings - [alpha]/[epsilon] > 2; Non-selective Coatings - [alpha]/[epsilon] ~ 1]

Property/ Material	Absorptance,[a] [alpha]	Emittance, [epsilon]	[alpha]/[epsilon]	Breakdown Temperature deg. F (deg. C)	Comments
Black Chrome	0.87-0.93	0.1	9		
Alkyd Enamel	0.9	0.9	1		Durability limited at high temperatures.
Black Acrylic Paint	0.92-0.96	0.86-0.93	1		
Black Inorganic Paint	0.89-0.97	0.84-0.90	1		
Black Silicone Paint	0.86-0.94	0.83-0.89	1		Silicone binder.
PbS/Silicone Paint	0.94	0.4	2.5	662 (350)	Has a high emittance for thickness > 10[mu]m.
Flat Black Paint	0.95-0.98	0.89-0.97	1		
Ceramic Enamel	0.9	0.5	1.8		Stable at high temperatures.
Black Zinc	0.9	0.1	9		
Copper Oxide Over Aluminum	0.93	0.11	8.5	392 (200)	
Black Copper Over Copper	0.85-0.90	0.08-0.12	7-11	842 (450)	Patinates with moisture.
Black Chrome Over Nickel	0.92-0.94	0.07-0.12	8-13	842 (450)	Stable at high temperature.
Black Nickel Over Nickel	0.93	0.06	15	842 (450)	May be influenced by moisture at elevated temperatures.
Ni-Zn-S Over Nickel	0.96	0.07	14	536 (280)	
Black Iron	0.90	0.10	9		
Sunsponge Foil	0.93-0.95	0.08-0.12	8-11	500 (260)	Tradename Aluminum Foil of Berry Solar Products

Thurmalox 250-Paint	0.96	0.52	1.9	1000 (535)	Dampney Company
Maxorb Solar Foil	0.96	0.10	9.6	392 (200)	Nickel Foil Ergenics Co.
Solkote Hi/Sorb	0.95	0.37	2.6	1000 (535)	Spray Paint of Solar Energy Corp.
Scotchbrand SJ-7001X Foil	0.96	0.07	13	400 (204)	3M Black Nickel Foil

[a] Dependent on thickness and vehicle-to-binder ratio.

Table 2-3. A Comparison of Various Materials Used for Collector Covers.

Glazing Type	Solar (Shortwave) Transmittance (%)	Infrared (Longwave) Transmittance (%)	Index of Refraction	Weatherability[a] and Durability
White Crystal glass	91.5	2	1.50	Excellent
Low-Iron Tempered Glass	88-89	2	1.51	Excellent
Low-Iron Sheet Glass	88-89	2	1.51	Excellent
Tempered Float Glass	84.3	2	1.52	Excellent
Fiberglass Reinforced Plastic (FRP)[b]	85-89	5-10	1.54	Good
Sheet Acrylic	88-92	10-25	1.49	Average to Good
Sheet Polycarbonate	82-90	10-20	1.59	Fair to Good
FEP Teflon	92-96	25-26	1.34	Good
Polyester Film	80-87	20-25	1.64-1.67	Fair to Good
Polyethylene Film	88	80	1.64	Poor

[a] Durability and weatherability of many plastics is still to be determined by field use. Some testing by NBS (Technical Note 1132) suggests that over a 24 month period glass covers will lose about 0-2% of their transmittance and plastic covers about 5-13%. Accumulated dirt accounted for another 4% average loss over the same period on both types (however, this dirt could be washed off). Of the plastic covers, FEP Teflon seemed to have the least weathering (0.5 to 4.3% loss) and the most dirt accumulation (5.4-7.7% loss).

[b] Common trade names - Kalwall Sunlight and Tedlar-Clad filon.

Each additional cover, whether it be glass or plastic, reduces convection heat losses but results in added expense and less solar radiation transmitted to the absorber. Most commercially available collectors come with one or two covers. The decision to use one or two covers depends on the type of absorber coating, the required collection temperatures, average ambient air temperature, the local wind conditions, and of course, the cost of the covers.

As stated in Section 2.1.2, the use of a selective surface is about equal to using one additional cover. Thus for most cases, only one glass cover is needed if the absorber has a selective coating. In fact, one study indicated that winter performance was actually reduced by the use of two glass covers with a selective surface compared to one cover with the selective surface.

Two covers are generally recommended for use in Northern climates where winter ambient air temperatures are low. For flat-plate collectors used mostly for winter heating, one rule of thumb is to use one glass cover where average winter air is greater than, 45 deg. F, and two glass covers in colder climates. Table 2-4 gives some approximations in the selection of collector covers.

2.1.4 Collector insulation. Insulation behind and to the side of the absorber serves to reduce conduction losses. Usually, this insulation consists of 1-6 inches of high-temperature fiberglass batting or semi-rigid board or even mineral wool. Styrofoam and urethane foams are usually not used because they may deform at high temperatures or give off gases (which may be toxic). The insulation should be separated from the absorber plate by 1/2 to 3/4 inch and have a reflective foil facing the absorber plate. If fiberglass insulation is used, it should not be typical construction grade which contains phenolic binders that may "outgas" at the stagnation temperature of the collector. In all cases, specifications should call for insulations that are not flammable, have a low thermal expansion coefficient, do not melt or outgas at collector stagnation temperatures (300 deg. - 400 deg. F), and (whenever possible) contain reflective foil to reflect thermal radiation back to the absorber.

2.1.5 Collector housings. The housing or collector box serves to:

a. Support the collector components.
b. Protect the absorber and insulation from the environment.
c. Reduce convection and conduction losses from the absorber.

Many housing designs are available on the market. They are constructed of metals, wood, plastics, concrete, and other materials. The most commonly used materials are aluminum, galvanized sheet metal, fiberglass laminates, high temperature thermoplastics, and wood (Montgomery, 1978). It is recommended that wood be avoided for use as a structural member, spacer, or anchor for panels due to its susceptibility to deterioration and flammability.

All structural materials are suitable if properly used. However, most commercially available housings consist of a galvanized sheet metal box with an anodized aluminum frame which fits on top of the box. Some housings are designed to be integrated directly into the roof or wall structure, thus reducing construction costs.

Table 2-4. Guide to Selection of Number of Transparent Cover Plates.

Collection Temperature Above Ambient Temperature ($t_{[c]} - t_{[a]}$)	Typical Applications	Optimum Number of Cover Plates	
		Black-Painted Absorber [epsilon] = 0.9 or 0.95	Selective Absorber [epsilon] = 0.2 or less
-5 deg. C to +5 deg. C (-10 deg. F to +10 deg. F)	Heat source for heat pump Heating of swimming pools in summer Air heating for drying	none	none
5 deg. C to 35 deg. C (10 deg. F to 60 deg. F)	Domestic water heating Heating of swimming pools in winter Air heating for drying Solar distillation Space heating in non-freezing climates	1	1
35 deg. C to 55 deg. C (60 deg. F to 100 deg. F)	Winter water heating Winter space heating	2	1
55 deg. C to 80 deg. C (100 deg. F to 150 deg. F)	Summer air conditioning Steam production in summer Refrigeration Cooking by boiling	3	2

Since field labor is expensive, the collector housing should be designed such that the collector units can be quickly secured in place and connected to the external piping. Provisions should also be made for easy replacement of broken glass covers. The absorber plate should be mounted so as to be thermally isolated as much as possible from the housing.

2.1.6 Collector gaskets and sealants. Gaskets and sealants must be carefully selected if a collector is to have a long life. Generally, the housing and the glazing have different rates of thermal expansion. Gaskets and sealants form the flexible interface between the two components and seal out moisture and other contaminants; if they fail, moisture will fog the glazing and may possibly damage the absorber coating and the insulation. These problems can drastically reduce the thermal performance of the collector.

Two suitable sealing methods are shown in Figures 2-2 and 2-3 (Montgomery, 1978). The gaskets provide flexible support and the primary weather sealant insures against moisture leakage. Desiccants are sometimes placed between the two glazings to absorb any moisture that may remain after cover installation. When selecting collector gaskets and sealants, certain material requirements must be kept in mind. The gaskets and seals must:

a. Withstand significant expansion and contraction without destruction.
b. Adhere effectively to all surfaces.
c. Resist ultraviolet degradation.
d. Resist outdoor weathering.
e. Not harden or become brittle.
f. Withstand temperature cycling from -30 deg. to 400 deg. F.
g. Not outgas at high temperatures.

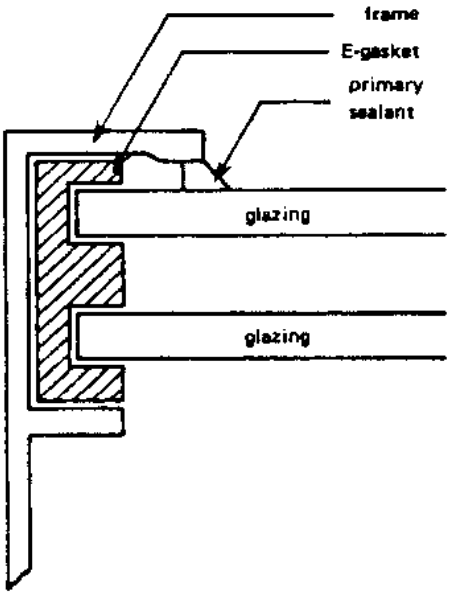

Figure 2-2. Single gasket seal for double glazing.

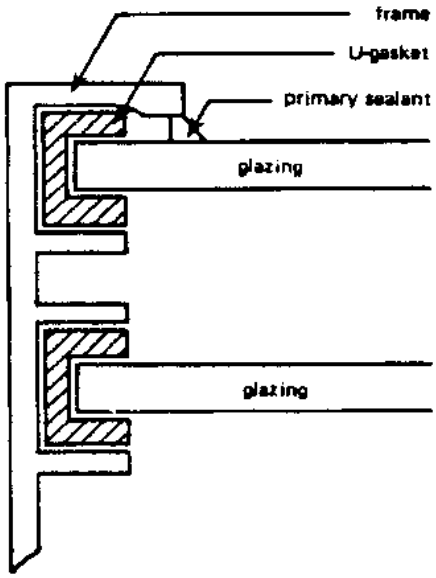

Figure 2-3. Typical sealing method for single or double glazing.

Both EPDM and silicone rubbers have been found adequate for use as gasket materials. Silicone sealants have exceptional weathering resistance and have received widespread use for many years.

2.1.7 Collector fluids - corrosion and freeze protection. The choice of which collector fluid to use is important because this is the life-blood of the system. The cheapest, most readily obtainable, and thermally efficient fluid to use is ordinary water. However, water suffers from two serious drawbacks - it freezes and it can cause corrosion. Therefore, the choice of collector fluid is closely linked to the type of solar system, the choice of components, future maintenance, and several other factors which will be discussed in this section. Implicit in this discussion is the use of a fluid other than air as the collector fluid. As explained in Table 2-1 an air solar system does not suffer from corrosion or freezing effects, but its low density and heat capacity require the use of fans and large ducts, large storage volumes, and is generally not suitable for domestic water heating. The remainder of this section applies to liquid solar heating systems.

A list of standards has been prepared for heat transfer fluids and can be found in the reference, "Intermediate Minimum Property Standards" (see Section 6.0). Generally the standards state that the heat transfer fluid must be nonionic, high dielectric, nonreactive, noncorrosive, nonflammable and stable with temperature and time. If the fluid is toxic it may be used only in systems specially designed for it as will be explained later.

The National Bureau of Standards (1980), Ref - DOE Solar Heating Materials Handbook, has proposed the following criteria to reduce the risk of fire in the use of solar heat transfer fluids:

The flash point of the liquid heat transfer fluid shall equal or exceed the highest temperature determined from (a), (b), and (c) below:

a. A temperature of 50 deg. above the design maximum flow temperature of the fluid in the solar system; or

b. (1) A temperature 200 deg. F below the design maximum no-flow temperature of the fluid attained in the collector provided the collector manifold assembly is located outside of the building and exposed to the weather and provided that relief valves located adjacent to the collector or collector manifold do not discharge directly or indirectly into the building and such discharge is directed away from flames and ignition sources; or,

(2) The design maximum no-flow temperature of the fluid in all other manifold and relief valve configurations;

c. 100 deg. F.

If there is no danger of freezing and the collector loop consists of all copper flow passages, then ordinary water would be the choice for collector fluid. If freezing conditions are encountered, there are a number of designs that should be considered before it is decided to use a heat transfer oil or antifreeze mixture. These freeze protection schemes are summarized here using Figure 2-4 as the basic open loop type collector circuit.

a. Drain Down or Drain Back Method - The water in the collector is drained out of the system, or into a tank near the collector, or into the main storage tank when temperatures in the collector approach freezing. This scheme requires automatic valves to dump the water and purge air from the system. Often a larger pump will be required to overcome the system head and re-prime the collectors. A way to avoid automatic (solenoid) valves is to drain the collectors whenever the pump shuts off. This still requires a larger pump. Three-way valves exist that can use city water pressure to reprime the system; otherwise pumps must be used. Some drainback systems only drain the water to a small tank near the collectors thus requiring only a small additional pump. Heat exchangers may be required to separate potable water from nonpotable water.

b. Heat Tapes - Electric resistance heat tapes are thermostatically activated to heat the water. This scheme requires extra energy and is not completely reliable. Insertion of heat tapes into preconstructed collectors may be difficult.

c. Recirculation Method - In this method the control system of Figure 2-4 merely turns on the pump if freezing approaches. In this way, warm water from storage circulates through the collectors until the freezing condition is over. The only extra component needed is a freeze sensor on the collector which is a minimum cost item ($5-$10). However, by circulating heated water, the capacity of storage decreases and less is available the following day. This method is probably the most reliable of the three since it does not depend on additional electrical valves or heating tape, provided that back up power is available to operate pumps in the event of power failure.

If the preceding methods are not acceptable or if the choice of water is not acceptable due to concern about corrosion, then a heat transfer fluid must be used. The heat transfer fluid must be used with a heat exchanger in a "closed--loop" configuration as shown in Figure 2-4.

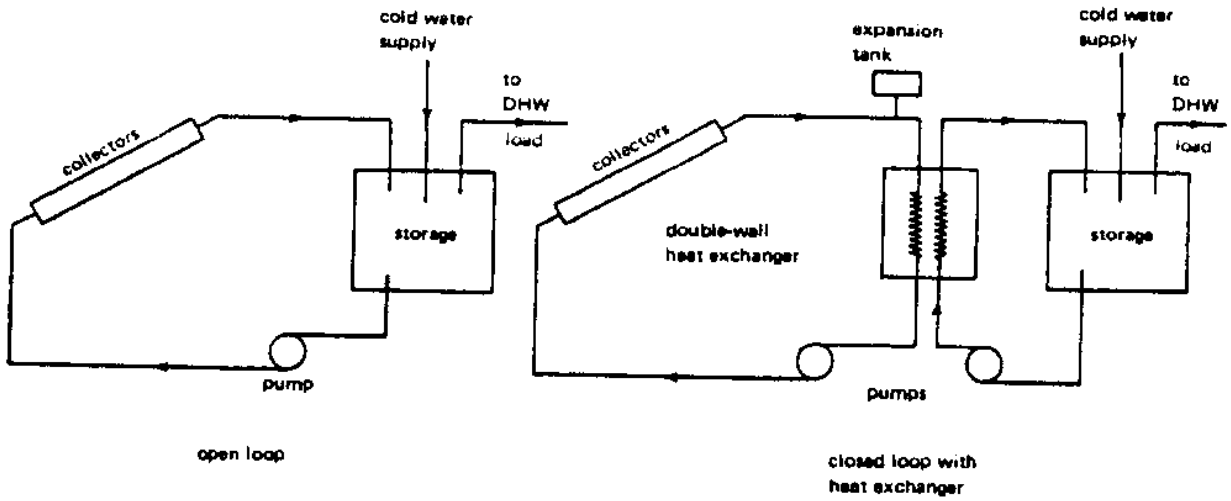

Figure 2-4. Typical configurations for solar water heater systems.

The configuration shown in Figure 2-4 will be from 10%-25% less efficient due to the temperature penalty associated with the heat exchanger and the low specific heat of the heat transfer fluid as compared to water. Note an additional pump is also required. If the heat transfer fluid is toxic or non-potable (such as antifreeze) then a double-walled heat exchanger must be used for protection. The different types of heat exchangers are explained in Figure 2-5 (National Solar Heating and Cooling Info Center, 1979).

It is difficult to estimate the most cost effective freeze protection method. Some studies have shown that for many areas in the U.S., the recirculation method is best particularly where freezing days are few in number. It tends to have the lowest capital cost and energy use cost. However, all the methods except heat transfer fluids rely on the presence of electricity to operate. A simultaneous electrical failure and freezing condition would result in potential failure of the systems. An exception is that new thermally actuated draindown valves are becoming available to replace the sometimes troublesome solenoid valves. Therefore, the absolute safest system would be the nonfreezing heat transfer fluids and these might be considered for the very cold parts of the country (Boston, Chicago, etc.). Each potential project should be considered individually using local weather criteria, freeze protection capital costs, additional energy to run the system, reliability, maintenance, and type of system as the criteria. Often a detailed computer simulation would be required to choose. However, any of the methods will provide some degree of protection. If heat transfer fluids are selected for corrosion or freeze protection, the following paragraphs discuss pertinent criteria.

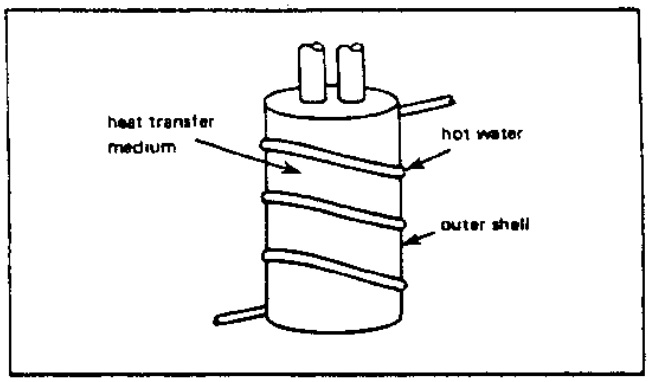

Double Wall. Another method of providing a double separation between the transfer medium and the potable water supply consists of tubing or a plate coil wrapped around and bonded to a tank. The potable water is heated as it circulates through the coil or through the tank. When this method is used, the tubing coil must be adequately insulated to reduce heat losses.

Shell and Tube. This type of heat exchanger is used to transfer heat from a circulating transfer medium to another medium used in storage or in distribution. Shell and tube heat exchangers consist of an outer casing or shell surrounding a bundle of tubes. The water to be heated is normally circulated in the tubes and the hot liquid is circulated in the shell. Tubes are usually metal such as steel, copper or stainless steel. A single shell and tube heat exchanger cannot be used for heat transfer from a toxic liquid to potable water because double separation is not provided and the toxic liquid may enter the potable water supply in a case of tube failure.

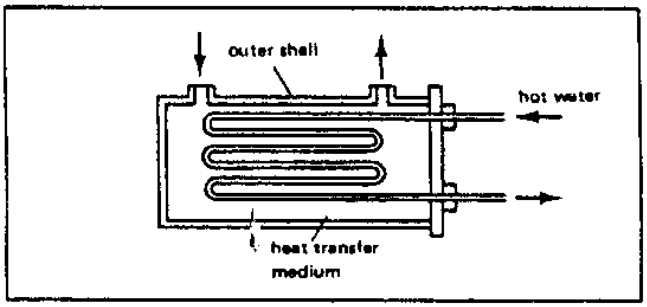

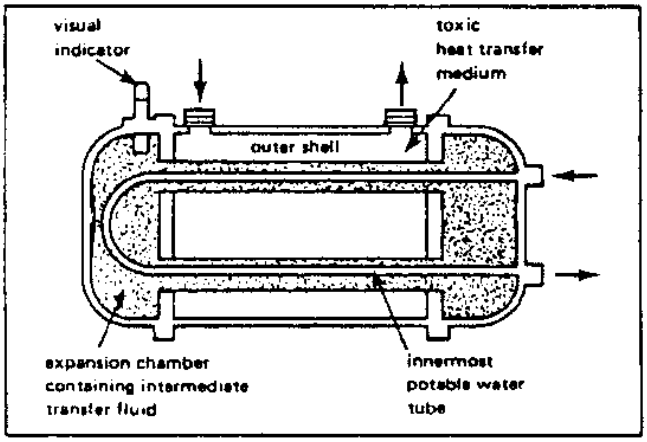

Shell and Double Tube. This type of heat exchanger is similar to the previous one except that a secondary chamber is located within the shell to surround the potable water tube. The heated toxic liquid than circulates inside the shell but around this second tube. An intermediary nontoxic heat transfer liquid is then located between the two tube circuits. As the toxic heat transfer medium circulates through the shell, the intermediary liquid is heated, which in turn heats the potable water supply circulating through the innermost tube. This heat exchanger can be equipped with a sight glass to detect leaks by a change in color—toxic liquid often contains a dye—or by a change in the liquid level in the intermediary chamber, which would indicate a failure in either the outer shell or intermediary tube lining.

Figure 2 5. Heat exchangers for solar water heating systems.

Most heat transfer fluids contain some degree of toxicity. To minimize the probability of contamination of potable water systems the following items should be addressed in any specification or bid:

a. Assurances to preclude the possibility of cross connection of potable water piping with heat transfer fluid piping. The use of tags, color coding, different pipe connections, etc, are suggestions.
b. Hydrostatic testing of system to find leaks.
c. Color indicators in heat transfer fluid to find leaks.
d. Safe designs for heat exchangers as given in Figure 2-5.
e. Determine toxicity classification of heat transfer fluids. Suggested categories as a minimum are:

   (1) Oral toxicity (ORAL LD_{50}).
   (2) Carcinogenic.
   (3) Ocular irritant (eye).
   (4) Dermal irritant (skin).

Before heat transfer fluids are discussed, a review of basic corrosion theory is in order. The two types of corrosion which cause the most damage in solar systems are galvanic and pitting corrosion (Eyre, 1978). Galvanic corrosion is a type of corrosion which is caused by an electrochemical reaction between two or more different metals in contact with each other. A chemical reaction between the metals causes a small electrical current which erodes material from one of the metals. Solar energy systems generally contain a number of different metals such as aluminum, copper, brass, tin, and steel. This makes the solar system a prime candidate for galvanic corrosion. If the dissimilar metals are physically joined or if they are contacted by a common storage or heat-transfer fluid, the possibility of galvanic corrosion becomes much greater.

Pitting corrosion is a highly localized form of corrosion resulting in deep penetration at only a few spots. It is one of the most destructive forms of corrosion because it causes equipment to fail by perforation with only a very small weight loss. When heavy metal ions such as iron or copper plate on a more anodic metal such as aluminum, a small local galvanic cell can be formed. This corrosion spot or "pit" usually grows downward in the direction of gravity. Pits can occur on vertical surfaces, although this is not as frequent. The corrosion pits may require an extended period (months to years) to form, but once started they may penetrate the metal quite rapidly.

Heavy metal ions can either come as a natural impurity in a water mixture heat transfer fluid or from corrosion of other metal parts of the solar system.

Pitting corrosion has the same mechanism (concentration cell) as crevice corrosion thus it can also be aggravated by the presence of chloride or other chemicals which can be part of the water mixture or a contaminant from solder fluxes. Aluminum is very susceptible to pitting corrosion, while copper generally is not.

There are several preventive measures which will eliminate or at least minimize galvanic and pitting corrosion in collector systems which use an aqueous collector fluid. The best method to prevent galvanic corrosion is to avoid using dissimilar metals. Where this is not possible or practical, the corrosion can be greatly reduced by using nonmetallic connections between the dissimilar metals, thus isolating them. Galvanic protection in the form of a sacrificial anode is another method of protecting the parent metals. Also, use of similar metals reduces the problems of fatigue failure caused by thermal expansion. Pitting corrosion is essentially eliminated if copper absorber plates are used. Corrosion inhibitors can minimize pitting corrosion in aluminum absorbers.

The types of heat transfer fluids available may be divided into two categories, nonaqueous and aqueous. Silicones and hydrocarbon oils make up the nonaqueous group, while the aqueous heat transfer fluids include untreated potable (tap) water, inhibited-distilled water, and inhibited glycol/water mixtures. The potable tap water and inhibited distilled water do not, of course, offer freeze protection. Table 2-5 shows characteristics of some of the most common heat transfer fluids.

2.1.7.1 Silicone fluids. Silicone heat transfer fluids have many favorable properties which make them prime candidates for collector fluids. They do not freeze, boil, or degrade. They do not corrode common metals, including aluminum. They have excellent stability in solar systems stagnating under 400 deg. F. Silicone fluids are also virtually nontoxic and have high flash and fire points. Current evidence indicates that silicone fluids should last the life of a closed-loop collector system with stagnation temperatures under 350 deg. - 400 deg. F. The flash point is fairly high, 450 deg. F, but since the HUD standards state that heat transfer fluids must not be used in systems whose maximum stagnation temperature is less than 100 deg. F lower than the fluid’s flash point, this limits most silicone oils to systems with a maximum temperature of 350 deg. F or less. Also silicones do not form sludge or scale, so system performance does not decrease with time.

The main drawback of silicone fluids is their cost. Currently silicone fluid costs about $25-$35 per gallon. Thus the cost of the 20 to 30 gallons of collector fluid required for a typical 500 ft^2 collector system becomes considerable. As with hydrocarbon oils, the lower heat capacity and higher viscosity of silicone fluid requires larger diameter and more expensive piping. Due to the higher viscosity, larger pumps will be required and subsequent higher pumping costs. One other problem with silicone fluids is the seepage of fluid at pipe joints. This problem can be prevented by proper piping installation and by pressurizing the system with air to test for leaks. There have also been reports of seepage past the mechanical seals of circulating pumps. The use of magnetic drive or canned wet rotor pumps when available in the proper size is a method of avoiding mechanical seal leakage.

Table 2-5. Heat Transfer

TABLE 2-5. Heat Transfer Fluids (Solar Engineering, 1978 and DOE Solar Heating Materials Handbook, 1981).
cs = centistokes; cps = centipoise; all degrees are Fahrenheit

Company	Useful Temperature Range (°F)	Specific Heat (Btu/lb/°F)	Viscosity	Specific Gravity	Toxicity	Flash Point	Other Features/ Specifications
BRAY OIL CO., INC. Los Angeles, CA							
Synthetic hydrocarbon Brayco 888	-40 to 300	0.55 at 60°	6.3 cs at 100° 1.9 cs at 210°	0.8 at 60°	Low	325° (Med.)	Formulated for aluminum systems. Noncorrosive & nonpoisonous.
DOW CHEMICAL, U.S.A Midland MI							
Dowfrost inhibited propylene glycol	-28 to 300	0.85 at 40° (50% water solution)	70 cps at 0° (50% water solution)	1.05	Low	None	Not compatible with aluminum or steel.
Dowtherm SR-1: inhibited ethylene glycol	-40 to 300	0.87 at 200° (50% SR-1 by weight)	0.9 cps at 200° (50% SR-1 by weight)	1.13	High	250° (Low)	Provides corrosion protection for all common metals.
Dowtherm J: alkylated aromatic fluid	-100 to 575 with 10-20 psig	0.5 at 200°	0.7 cps at 100° 0.35 cps at 200°	0.87	Low	145° (Low)	Resists both thermal degradation and oxidation.
Dowtherm HP	15 to 550	0.640	-	-	-	420° (Med.)	-
DOW CORNING CORP. Midland, MI							
Dow Corning Q2-1132: silicone heat tranfer liquid	-50 to 450	0.37 at 104° 0.42 at 392°	20 cs at 77° 7 cs at 210°	0.946 at 77°	Low	450° (High)	Water clear liquid. Essentially noncorrosive. Negligible thermal degradation at 400°.
Silytherm 444: silicone heat transfer fluid	-29 to 300	0.37 at 104° 0.42 at 392°	20 cs at 77°	0.37 at 104° 0.42 at 392°	None to Low	450° (High)	Similar to Q2 1132.
DREW CHEMICAL CORP. Boston, NJ							
Drewsol heat transfer fluid	-28.5 to 230	0.87 (avg.)	8.8 cps at 77°	1.136 (avg.)	None	None	Inhibits corrosion. Will not deteriorate asphalt.
EXXON							
Caloria HT 43 petroleum base with paraffinic stock (hydrocarbon)	15 to 600	0.46 at 122°	30.9 cs at 100°	0.85	None	420°	-
MARK ENTERPRISES, INC. Woodbridge, CT							
H-30C: synthetic hydrocarbon heat transfer fulld (blue)	-40 to 460	0.50 at 100°	220 cps at 32° 22 cps at 100° 4.3 cps at 200°	0.845	None	360° (Med.)	Noncorrosive. Will not attack metals, PVC, or elastomerics except butyl rubber. High thermal conductivity.
H-30: synthetic hydrocarbon heat transfer fluid (green)	15 to 460	0.57 at 100°	210 cps at 32° 24 cps at 100° 8.2 cps at 200°	0.835	None	310° (Med.)	Noncorrosive Will not attack metals, PVC, or elastomerics except butyl rubber. High thermal conductivity.

Table 2-5. Con't

TABLE 2-5. Heat Transfer Fluids (Solar Engineering, 1978 and DOE Solar Heating Materials Handbook, 1981). (Continued)
cs = centistokes; cps = centipoise; all degrees are Fahrenheit

Company	Useful Temperature Range (°F)	Specific Heat (Btu/lb/°F)	Viscosity	Specific Gravity	Toxicity	Flash Point	Other Features/ Specifications
MOBIL							
Mobiltherm 600 refined oils (hydrocarbon)	5 to 600	0.42 at 50°	55 cs at 100°	0.97	None	350° (Med.)	Highly aromatic
MONSANTO INDUSTRIAL CHEMICALS COMPANY St. Louis, MO							
Therminol 44, 55, 60 66 and 88 synthetic based fluids	-60 to 650	0.32 to 0.72 over temp. range	4,000 to 0.23 cs over temp. range	0.79 to 1.04 over range	Low	310° to 450° (Med.)	Wide range of applications not used with plastic elastomers.
NUCLEAR TECHNOLOGY CORP. Anson, CT							
Mutek 800 Series: *Ethylene glycol	-30 to 230	0.84 to 0.95 at 60°	3.4 cps at 100° 0.6 cps at 200°	1.03 to 1.07	High	None	Mutek 800 Series are designed for use in aluminum solar collector panels where corrosion and scaling protection is required
*Propylene glycol and water-based compounds	32 to 212	0.80 to 0.87 at 60°	0.7 cps at 100° 0.3 cps at 200°	1.03 to 1.04	Low	None	
RESOURCE TECHNOLOGY CORP. New Britain, CT							
Sun-Temp: nonaqueous heat transfer fluid	-40 to 500	0.56 at 72°	89 cps at 33° 2.1 cps at 212°	0.9 at 72°	None	380° (Med.)	Noncorrosive to aluminum, copper or steel.
SHELL							
Hydrocarbon Oil Thermia C	20 to 550	0.46 at 100°	62.9 cs at 100°	0.86 at 100°	None	455° (High)	-
SUNWORKS							
Sunsol 60 Propylene glycol	-55 to 250	0.82 at 77°	4 cps at 100°	1.06 at 75°	Low	None	Maintain pH between 6.5 and 8.0.
UNION CARBIDE CORP. Terrytown, NY							
UCAR 17 Inhibited ethylene glycol	-33 to 300	0.79 at 190°	60 cps at -10° 1.5 cps at 180°	1.1 at 60°	High	Low	Formulated for use in multi-metal systems. All values at 70% volume in water.
UCON 70 Polyglycol	-30 to 250	0.458 at 100°	65.6 cs at 100°	0.98	Low	535° (High)	-
UNIROYAL CHEMICAL DIVISION OF UNIROYAL, INC. Naugatuck, CT							
Synthetic polyalphaolefins	-40 to 400	0.50	10 cs at 200°	0.83	None	400° (Med.)	Relatively non-toxic and non-corrosive. Usually low pour point and volatility.

Silicones have the advantage of lasting the life of the system with little maintenance. While this helps minimize operating expenses, the initial cost of silicones is markedly higher than that of other available heat transfer fluids. However, the high initial cost of silicone heat transfer fluid may be less than the savings that result from minimum maintenance and no replacement of collector fluid. The use of silicone fluid allows absorbers with aluminum fluid passages to be used without fear of corrosion. The savings gained from the use of aluminum absorbers as opposed to copper absorbers could be substantial.

2.1.7.2 Hydrocarbons. Hydrocarbon oils, like silicones, also give a long service life, but cost less. They are relatively noncorrosive, nonvolatile, environmentally safe, and most are nontoxic. They are designed for use in systems with lower operating temperatures, since some brands break down at higher temperatures to form sludge and corrosive organic acids. Typical closed-cup flashpoints run from 300 deg. F to 420 deg. F, but the fluids with higher flashpoints have a higher viscosity. The HUD bulletin on minimum property standards for solar heating systems recommends a closed-cup flashpoint 100 deg. F higher than maximum expected collector temperatures.

Unsaturated hydrocarbons are also subject to rapid oxidation if exposed to air, necessitating the use of oxygen scavengers. Some hydrocarbons thicken at low temperatures and the resultant higher viscosity can cause pumping problems.

Newer hydrocarbons are being developed which do not harm rubber or materials of construction, since this has been a problem with hydrocarbons. In general, they cannot be used with copper, as it serves as a catalyst to fluid decomposition. The thermal conductivity of hydrocarbons is lower than that of water, although the performance of some brands is much better than others.

The cost of typical hydrocarbon and other synthetic heat transfer oils vary from about $6/gal to $20/gal. A typical liquid collector of 500 ft^2 plus the piping to and from storage will require from 20 to 30 gallons of collector fluid. The lower heat capacity and higher viscosity of these oils will also require larger diameter pipe, increasing materials costs further. If hydrocarbon fluids are used, the additional capital cost should be compared with expected savings due to lower maintenance costs. The use of aluminum absorbers rather than copper absorbers will also result in substantial savings.

2.1.7.3 Distilled water. Distilled water has been suggested for use in solar collectors since it avoids some of the problems of untreated potable water. First, since the distillation process removes contaminants such as chlorides and heavy metal ions, the problem of galvanic corrosion, though not completely eliminated, should be alleviated. However, distilled water is still subject to freezing and boiling. For this reason, an anti-freeze/anti-boil agent such as ethylene glycol is often added.

2.1.7.4 Water-anti-freeze. Nonfreezing liquids can also be used to provide freeze protection. These fluids are circulated in a closed loop with a double wall heat exchanger between the collector loop and the storage tank (see Figure 2-5).

Water/antifreeze solutions are most commonly used because they are not overly expensive. They range from $5-$10 per gallon including inhibitors. Ethylene and propylene glycol are the two most commonly used antifreezes. A 50-50 water/glycol solution will provide freeze protection down to about -30 deg. F, and will also raise the boiling point to about 230 deg. F.

The use of water/glycol solution presents an additional corrosion problem. Water glycol systems will corrode galvanized pipe. At high temperatures glycols may break down to form glycolic acid. This breakdown may occur as low as 180 deg. F and accelerate at 200 deg. F. This acid corrodes most all metals including copper, aluminum, and steel. The rate of glycol decomposition at different temperatures is still a subject of uncertainty. The decomposition rate of glycol varies according to the degree of aeration and the service life of the solution. Most water/glycol solutions require periodic monitoring of the pH level and the corrosion inhibitors. The pH should be maintained between 6.5 and 8.0. Replacement of the water/glycol solution may be as often as every 12-24 months or even sooner in high temperature systems. If these solutions are used in the collector loop, the seller should specify the expected life of the solution and the amount of monitoring required. The cost of periodic fluid replacement and monitoring should be considered in the economic analysis.

Since glycol-water mixtures do require a lot of maintenance (and since users can be quite negligent) it is recommended that glycols not be used in family housing solar heating and DHW systems, and that glycol-water solutions be reserved for use in large-scale installations which have regular maintenance schedules and where the high cost of silicone oils would be prohibitive.

2.1.8 Collector connections. Water flow through nonhorizontal collectors should always be against gravity, except in trickle-type collectors. Usually this means water inlet to the collector at the bottom, and outlet at the top. Care must be taken so that equal flow goes to all collectors. If the pipe manifold pressure drop is large, then end collectors will get little flow (see Section 2.9.1). The design most usually used is one in which the collectors are connected in parallel. This results in low pressure drop and high efficiency of each collector. A series hookup results in the highest temperature and the highest pressure drop but lowest collector efficiency. Higher temperatures than in the parallel arrangement may be obtained with parallel-series connections, but at the expense of reduced efficiency and greater cost. These high temperatures are not usually required for hot water and space heating. Figure 2-6 shows different connection configurations. All collector systems should be installed using a reverse-return (Z flow) piping layout as shown in figure 2-6a. Up to about 12 collectors in a row can be accommodated. Very large installations may merit computer simulations to optimize the flow balance of each stage.

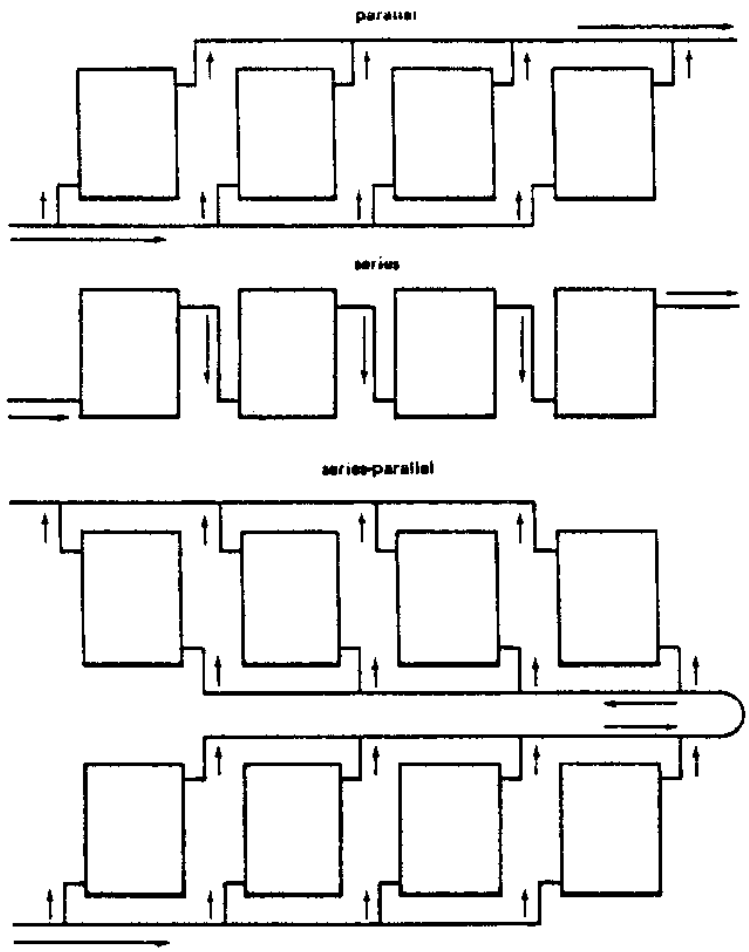

Figure 2-6. Connection schemes for solar heating systems.

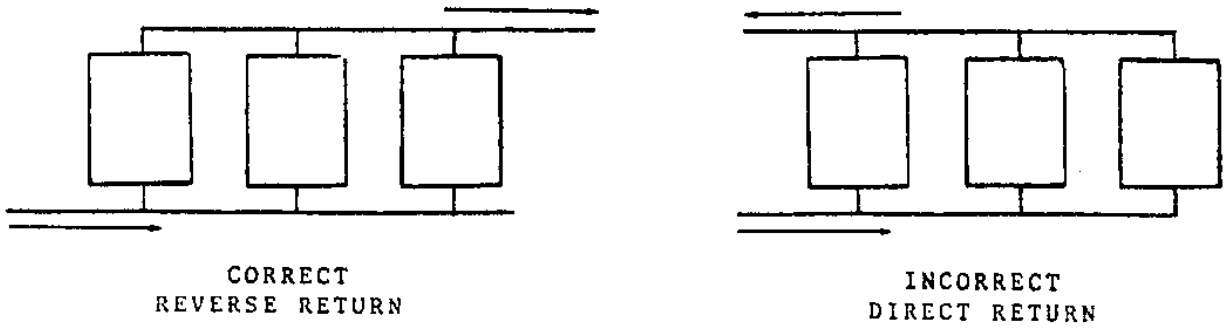

Figure 2-6a. COLLECTOR PIPING.

2.1.9 Collector efficiency and heat losses. In the preceding sections, many details as to the construction and choice of components of a solar collector have been given. All of these features contribute to how well a collector will perform or how efficient it will be. Solar collectors, depending on their construction and materials, suffer from several kinds of heat losses. They can lose heat by convection of wind blowing over their top and bottom surfaces. As the collector temperature increases above the temperature of the surrounding air, the radiation heat losses increase. This results in lower heat collected (lower efficiency) at higher collector temperatures. Heat can be lost by conduction from the back and sides of a collector. To evaluate the effects of all these parameters individually would involve detailed and difficult calculations.

Fortunately, collector performance can be compared much more easily by a single graph depicting collector efficiency versus the parameter [DELTA]T/I. collector efficiency is defined as the ratio of the heat collected to the Insolation (I) falling on the surface of the collector. Also:

[DELTA]T = $T_{\lceil i \rceil}$ - $T_{\lceil a \rceil}$

where $T_{\lceil i \rceil}$ = temperature of fluid entering collector (inlet).

$T_{\lceil a \rceil}$ = ambient air temperature.

Figure 2-7 gives the efficiency of some typical flat plate solar collectors. The most efficient solar collector would convert 100% of the sun's energy falling on it to usable heat. As shown in Figure 2-7, this is impossible so the designer looks for a collector that converts the greatest percentage of solar energy to heat, at the required temperature, and at the lowest cost.

It is important that each collector be tested according to an exacting standard. The early standard for testing solar collectors, was NBSIR 74-635 published by the National Bureau of Standards (Hill and Kusada, 1974). This is the standard the previous edition of this report used to report collector efficiencies. Subsequently, the American Society of Heating, Refrigerating, and Air Conditioning Engineers, Inc. (ASHRAE) sponsored the development of a uniform method of testing solar collectors to form the preliminary standard 93-P and finally the version in use today, ASHRAE Standard 93-77, "Methods of Testing to Determine the Thermal Performance of Solar Collectors." This method uses the Hottel-Whillier equation and is generally accepted in the solar industry.

The differences between the NBS and the ASHRAE standard are as follows:

a. ASHRAE requires the use of gross collector area rather than aperture or net area used in NBS.
b. ASHRAE uses the collector inlet temperature as one of its parameters whereas NBS uses the average absorber plate temperature defined as the sum of the inlet and outlet temperatures divided by two.

In general, the NBS standard will give higher collector efficiencies, possibly 5%-10%, but the accepted consensus standard at this time is ASHRAE Standard 93-77. The Department of Energy (DOE) is using the ASHRAE standard in developing its program for national certification and rating of solar collectors. Therefore, all data given in this report and future reports will conform to the ASHRAE standard.

Figure 2-7 shows many contemporary solar collectors as of the writing of this report. Data is from ASHRAE 93-77 tests. In some cases the Naval Civil Engineering Laboratory (NCEL) has conducted the test itself. A typical NCEL test report of a solar collector is given in Durlak (1979a) which is the latest report. It summarizes other reports available.

A large amount of test data on solar collectors is becoming available through the national certification program run by SEIA, the NCEL tests, and individual laboratories testing for the manufacturers. The National Certification Program managed by SEIA (See Section 1.2) is now the primary source of solar collector test data.

Table 2-6 represents a random sampling of the many solar collectors available. It is not a comprehensive list nor is it an endorsement of any particular collector. These data were excerpted from the Solar Rating and Certification Program of SEIA, July 1983 Edition. The main criteria for each collector in Table 2-6 is that it have an accepted ASHRAE 93-77 performance test. Other than that, collectors were chosen to provide a variety of types, materials, construction techniques, geographical locations, and cost information. A few cautions are advisable. Prices may be up to one year old from the publication date and should be checked if a purchase is anticipated. Manufacturers may have other models available. For example, Table 2-6 may give details for a single glazed collector and chances are the manufacturer would also have a double glazed model with valid ASHRAE 93-77 test data. The user may know of other collectors with test data available. These could be readily compared to similar models in Table 2-6.

To select a collector from Table 2-6, first note that collectors constructed of similar materials (copper, aluminum, etc.) are grouped together. Then, it is necessary to pay attention to the y-intercept (called efficiency intercept in Table 2-6) which gives the highest efficiency of a collector, and the slope which gives a measure of the rate at which the collector efficiency decreases. These parameters will be used later in estimating the solar collector performance. In general the more negative the slope, the less efficient the collector. However, this must be balanced with the value of the efficiency intercept. For example, in Figure 2-7 and Table 2-6 note that double glazed collectors start out at a lower instantaneous efficiency (y-intercept) but do not lose efficiency very fast (less negative slope) so that when comparing with single glazed collectors the operating temperature ($T_{\lceil i \rceil}$) will ultimately determine which is best (see Table 2-4 also). When the cost of the collector is also considered, it becomes very difficult to "intuitively" pick a best collector in Table 2-6. The user should consider several options of collectors when using the worksheets in the later sections. In choosing a collector, Figure 2-7 should be used only for qualitative judgments, while Table 2-6 should be used for typical slope and intercept values. This avoids the errors associated with trying to "read off" numbers on Figure 2-7.

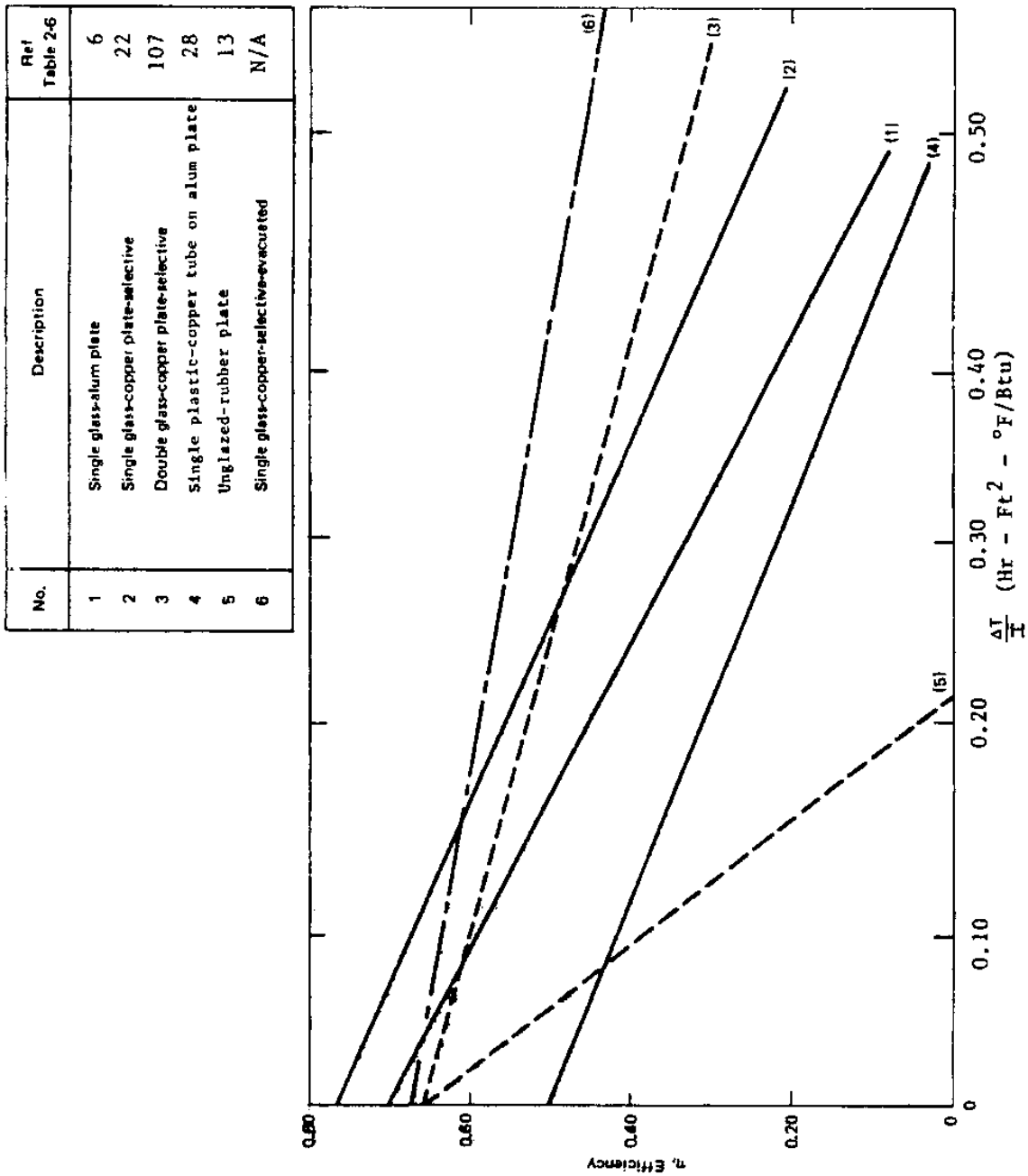

No.	Description	Ref Table 2-6
1	Single glass-alum plate	6
2	Single glass-copper plate-selective	22
3	Double glass-copper plate-selective	107
4	Single plastic-copper tube on alum plate	28
5	Unglazed-rubber plate	13
6	Single glass-copper-selective-evacuated	N/A

Figure 2-7. Typical Solar Collector Efficiencies.

Table 2-6. Solar collector test results.

Item	Model No.	Glazing Type		Absorber Coating		Efficiency Intercept %	Slope of Efficiency Line Btu/hr-ft^2-°F	Area of One Panel (Gross) ft^2	Cost per Panel $	Absorber Material	Manufacturer
		Single	Double	Non selective	Selective						
ALUMINUM ABSORBER COLLECTORS											
1	Spectrum II	Glass		X		0.5468	-1.3825	34.33		Aluminum	Energy Marketing Group, Inc. Petoskey, MI
2	37	Filon Lexan		X		0.6067	-1.1410	38.13		Aluminum	Great Western Solar, Inc. Julesburg, CO
3	A-100	Polycar-bonate		X		0.5427	-1.340	37.44		Aluminum	Holiday Energy Products Wakarusa, IN
4	1504	Polyester		X		0.6406	-0.9643	31.88		High Purity Aluminum	Reynolds Metals Company Richmond, VA
5	1555	Glass		X		0.7315	-1.0125	47.71		High Purity Aluminum	Reynolds Metals Company Richmond, VA
6	LC46SC	Glass		X		0.6806	-1.1624	24.76		Aluminum	Solar Energies of California Santee, CA
7	Mark II		Lexan (Outer) Filon (Inner)	X		0.5186	-1.1521	13.16		Aluminum	Sandoster Solar Systems/Production Plastics McMinnville, TN
8	367	Glass		X		0.6042	-1.1160	18.81		Extruded Aluminum	Sunshine Solar Company Tucson, AZ
STEEL ABSORBER COLLECTORS											
9	SC L10206	Glass			X	0.7274	-0.8270	21.6	$495	Stainless Steel	American Yazaki Corporation Dallas, TX
10	SW-T202B	Glass		X		0.7381	-1.1162	21.7		Stainless Steel	American Yazaki Corporation Dallas, TX
11	1800S	Glass		X		0.7048	-1.2115	18.94		Formed Steel Plate	Solar Beam Inc., Energy Systems Burlingame, CA
12	SCX/SCV-6	Filoplated fiberglass reinforced polyester resin			X	0.6268	-0.7771	48.91		Stainless Steel	State Industry Ashland City, TN
RUBBER/PLASTIC ABSORBER COLLECTORS											
13	SolaRoll TM	Unglazed				0.6813	-2.9224	70.99	$369	Rubber	Bio-Energy Systems Inc. Ellenville, NY
14	SunMat TM	Unglazed				0.6889	-2.2461	35.89	to	Rubber	Bio-Energy Systems Inc. Ellenville, NY
15	SRX 290	Glass				0.6972	-1.4141	19.25	$403	Rubber	Bio-Energy Systems Inc. Ellenville, NY
16	FAFCO 110	Unglazed				0.8302	-3.7314	39.89		Plastic	Fafco, Inc. Menlo Park, CA

Table 2-6. Solar collector test results. (Con't.)

Item	Model No.	Glazing Type		Absorber Coating		Efficiency Intercept %	Slope of Efficiency Line Btu/hr-ft^2-°F	Area of One Panel (Gross) ft^2	Cost per Panel $	Absorber Material	Manufacturer
		Single	Double	Non-selective	Selective						
RUBBER/PLASTIC ABSORBER COLLECTORS											
17	JV (8')	Reinforced polyester				0.6141	-1.7658	34.2		Plastic	Fafco, Inc. Menlo Park, CA
18	8' Solar Pool Heating Collector	Unglazed				0.7362	-2.3788	32.0		Black Polymer	Hallmark Solar Systems, Inc. Rolling Meadows, IL
19	IRC-127	Fiberglass reinforced plastic		X		0.5619	-1.0874	16.67		Coiled plastic tube	Solar Research, Inc. Watsonville, CA
20	TES6033	Polycar bonate Tedlar alter		X		0.6748	-1.0096	20.08		Extruded poly-sulpone	Remade Energy Systems, Ltd. Tempe, AZ
21	TP011001	Unglazed				0.8229	-3.6727	39.33		Polypro-pylene w/carbon black stabili-zation	Remade Energy Systems, Ltd. Tempe, AZ
22	B6I-32	Fiberglass reinforced polyester				0.6193	-1.5668	31.52		Ethylene proplylene copolymer	Sealed Air Corp Wayward CA
23	FS-40	Unglazed reinforced polyester				0.7738	3.5872	39.38		Ethylene proplylene copolymer	Sealed Air Corp. Wayward CA
COPPER TUBES ON ALUMINUM ABSORBERS											
24	DHW-1	Fiberglass		X		0.5910	-1.0679	30.26		Copper on steel	Hansberger Yuma, AZ
25	EC-2	Glass		X		0.7237	-1.2001	22.77		Copper tube/ aluminum finish	Electra Solar Energy Div./ Airlex Inc. New York, NY
26	CPS-8P	Teflon/ Tedlar		X		0.6283	-0.9769	32.75		Aluminum finish/ copper	Goettl Air Con-ditioning, Inc. Phoenix, AZ
27	SGCPS8P1	Tedlar		X		0.6729	-1.1921	32.33		Aluminum finish/ copper tube	Goettl Air Con-ditioning, Inc. Phoenix, AZ
28	A.H.W.	Extruded polycar-bonate		X		0.5452	-0.8601	29.62		Copper tubes bonded to steel sheet	Helios Solar Co. Simi Valley, CA
29	FMC	Glass		X		0.6945	-1.091	32.0		Aluminum finish/ copper tube	Indal Aluminum Products Los Angeles, CA
30	FLC	Fiberglass		X		0.6527	-1.2847	32.0		Aluminum finish/ copper tube	Indal Aluminum Products Los Angeles, CA
31	5000T	Tedlar		X		0.7308	-1.3234	19.8		Copper tube/ aluminum finish	International Solar Products Corporation Monterey Park, CA

Table 2-6. Solar collector test results. (Con't.)

Item	Model No.	Glazing Type		Absorber Coating		Efficiency Intercept %	Slope of Efficiency Line Btu/hr-ft^2-°F	Area of One Panel (Gross) ft^2	Cost per Panel $	Absorber Material	Manufacturer
		Single	Double	Non-selective	Selective						
COPPER TUBES ON ALUMINUM ABSORBERS											
32	5000G	Glass		X		0.7451	-1.3190	39.7		Copper tube/ aluminum finish	International Solar Products Corporation Monterey Park, CA
33	SG 33-P-N-A	Glass		X		0.7826	-1.1498	33.0	$450	Aluminum finish/ copper tube	Raypak, Inc. Westlake Village, CA
34	SG 42-P-N-A	Glass		X		0.7826	-1.1498	41.97	$567	Aluminum finish/ copper tube	Raypak, Inc. Westlake Village, CA
35	SK 1001A	Glass		X		0.7492	-3.0342	44.54		Copper tubing bonded between aluminum sheets	Raypak, Inc. Westlake Village, CA
36	BOGE 11	Glass		X		0.6820	-1.1572	21.3		Copper tube/ aluminum sheet	Solahart California San Diego, CA
37	SD-6A	AFG Sunadex			X	0.7657	-0.7234	18.52		Welded finned tube, copper	Solar Development Inc. Riviera Beach, FL
38	SE-20	Glass		X		0.6543	-1.1607	21.07		Aluminum finish/ copper tube	Solar Edwards, Inc. San Diego, CA
39	C 2	Glass		X		0.6517	-1.1539	15.88		Copper tube/ aluminum finish	Solar Heat Corp. Santa Monica, CA
40	SM-30A	Glass			X	0.6257	-1.4221	35.0		Copper tube/ aluminum finish	Solar Tech Mfg., Inc. Pacoima, CA
41	LSC-II	Glass		X		0.7604	-1.1398	21.89	$254	Copper tube/ aluminum finish	Solroor, Inc., Lordan Solar Energy Systems New York, NY
42	CAP-48-SC	Glass		X		0.7146	-1.0785	31.70		Copper tube/ aluminum plate	Staghart Indust-ries, Inc. Ontario, CA
43	BEA-38	Glass		X		0.7040	-1.0133	24.79	$520	Copper tube/ aluminum plate	Sunburst Solar Energy Division Acro Energy Corp Elk Grove, CA
44	Suncor II	Glass		X		0.6772	-1.1731	18.93		Copper tube/ aluminum finish	Suncor, Inc. Tempe, AZ

Table 2-6. Solar collector test results. (Con't.)

Item	Model No.	Glazing Type		Absorber Coating		Efficiency Intercept %	Slope of Efficiency Line Btu/hr-ft^2-°F	Area of One Panel (Gross) ft^2	Cost per Panel $	Absorber Material	Manufacturer
		Single	Double	Non-selective	Selective						
COPPER TUBES ON ALUMINUM ABSORBERS											
45	FPS-3474	Glass		X		0.6772	-1.1731	18.93		Copper tube/ aluminum finish	Sun Devil Solar Collector Works Mesa, CA
46	SS30S	Glass		X		0.7475	-1.4557	30.7		Aluminum finish/ copper tube	Sun Systems Phoenix, AZ
47	C-40	Glass		X		0.6787	-0.9556	40.34		Aluminum finish/ copper tube	Sun-West Solar Systems Phoenix, AZ
48	Jantar 32	Glass		X		0.7585	-1.2023	31.99		Copper tube/ aluminum finish	Urja, Inc. Santa Ana, CA
49	AF-32 SW/SG	Glass		X		0.8268	-1.3016	32.0	$10.90 to $13.25 per ft^2	Copper tube/ aluminum finish	US Solar Corp. Hampton, FL
50	AF-24-DG		Glass	X		0.7076	-0.7395	24.55	$10.90 to $13.25 per ft^2	Copper tube/ aluminum finish	US Solar Corp. Hampton, FL
51	SM-11	Glass			X	0.6858	-1.1457	20.00		Copper tube/ aluminum finish	Solar Unlimited, Inc. Huntsville, AL
ALL COPPER ABSORBERS											
52	HD301-TL	Glass			X	0.7593	-0.9114	31.87	$525 to $645	Copper	AcroSun Industries, Inc. Hollister, CA
53	A-3	Glass			X	0.7751	-0.6699	19.11		Copper	Aircraftsman Millbrook, AL
54	SOLCAN 1	Tedlar		X		0.6430	-0.3970	15.21		Copper pipe	Albuquerque Western Solar Industries, Inc. Albuquerque, NM
55	A 1171 C	Glass			X	0.7499	-0.7283	24.35		Copper	Allstate Solar Systems, Inc. Lake Havasu City, AZ
56	CAL 40	Glass		X		0.7348	-1.1253	40.50		Copper	Alternate Energy Distributors Monrovia, CA
57	3200	Glass			X	0.7060	-0.8233	32.2		Copper	American National Energy Corp. San Diego, CA
58	SS 11	Glass			X	0.7444	0.7195	22.96		Copper	American Solar King Corporation Waco, TX

Table 2-6. Solar collector test results. (Con't.)

Item	Model No.	Glazing Type		Absorber Coating		Efficiency Intercept %	Slope of Efficiency Line Btu/hr-ft^2-°F	Area of One Panel (Gross) ft^2	Cost per Panel $	Absorber Material	Manufacturer
		Single	Double	Non-selective	Selective						
ALL COPPER ABSORBERS											
59	903-4	Glass			X	0.6603	-0.7652	24.81		Copper	American Sun-systems, Inc. Milford, CT
60	D-477	Glass			X	0.7362	-0.7480	33.08	$500	Copper	Ametek, Inc Power Systems Div Ivyland, PA
61	Sun-tracker 3	Coilzak reflective surface			X	0.5120	-0.4430	20.91		Copper parabolic concen-trator	Applied Solar Resources Phoenix, AZ
62	SL 4875	Tedlar		X		0.7544	-1.2223	30.8		Copper	Cal West Energy Services, Inc. Palos Verdes Estates, CA
63	SL 4810	Glass		X		0.7729	-1 1231	30 8		Copper	Cal West Energy Services, Inc. Palos Verdes Estates, CA
64	C-142C	Glass			X	0.7776	-0.8548	31.83	$495	Copper	Colt, Inc. Paso Robles, CA
65	C-142P	Glass		X		0.7442	-1.0498	31.91		Copper	Colt, Inc. Paso Robles, CA
66	SS-48	Glass			X	0.7579	-0.7306	32.29		Copper	Fafco, Inc. Menlo Park, CA
67	323	Glass			X	0.7823	-0.9243	31.42		Copper	International Solar Panel Inc. Fort Collins, CO
68	Royal II	Glass		X		0.7235	-1.0419	24.62		Copper	King Energy Systems, Inc. Irvine, CA
69	9503	Glass			X	0.7251	-0.7670	32.66		Copper	Monogon, Ltd. Gaithersburg, FL
70	MWDC-724	Glass		X		0.6678	1.1176	25.16		Copper	Mor-Flo Indus-tries, Inc. Cleveland, OH
71	SPSC-730	Tedlar		X		0.6109	-1.1237	31.24		Copper	Mor-Flo Indus-tries, Inc. Cleveland, OH
72	SC 32-S-F	Glass		X		0.6823	-1.1501	32.04		All copper	Northrup, Inc. Hutchison, TX
73	98C	Glass		X		0.7230	-1.1086	24.36	$413	All copper	Novan Energy, Inc Boulder, CO
74	32	Glass		X		0.6978	-1.168	32.29		Copper	Parker Inter-national Corp Los Alamitos, CA
75	408C	Glass			X	0.7099	-0.8083	29.8		Copper	Radco Products, Inc. Santa Maria, CA

Table 2-6. Solar collector test results. (Con't.)

Item	Model No.	Glazing Type		Absorber Coating		Efficiency Intercept %	Slope of Efficiency Line Btu/hr-ft^2-°F	Area of One Panel (Gross) ft^2	Cost per Panel $	Absorber Material	Manufacturer
		Single	Double	Non-selective	Selective						
ALL COPPER ABSORBERS											
76	TES6503	Polycarbonate/ Tedlar filter		X		0.7391	-1.0649	38.96		Copper	Ramada Energy Systems, Ltd. Phoenix, AZ
77	SC 33-SMC-SW	Glass			X	0.7203	-0.7819	32.92	$532	Copper	Raypak, Inc. Westlake Village, CA
78	0-11	Glass		X		0.7354	-1.0281	18.8		Copper	Revere Solar & Architectural Products, Inc. Rome, NY
79	325. 311480	Glass			X	0.7362	-0.7480	33.08		Copper	Sears, Roebuck, & Company Chicago, IL
80	SD7WB (4X10)	Glass			X	0.7325	0.8964	40.5		Copper	Solar Development Inc. Riviera Beach, FL
81	SW201	Tedlar			X	0.604	0.326	14.76		Copper parabolic concentrator	Solar Resources International Phoenix, AZ
82	36L	Glass		X		0.7286	-1.1621	24.50		Copper	Solar Shelter, Inc. Denver, CO
83	STM-3CH	Glass			X	0.7315	-0.8116	32.91		Copper	Solar Tech Mfg., Inc. Pacoima, CA
84	MP412	Glass			X	0.7877	-0.8438	47.93		Copper	Solar Transition, Inc. San Diego, CA
85	APC-4B-3			X		0.7449	-2.2097	30.22		Textured copper coil	Sunburst Solar Energy Division Acro Energy Corp. Elk Grove, CA
86	BEAB 48	Glass			X	0.7022	-0.7218	32.92	$675	Copper	Sunburst Solar Energy Division Acro Energy Corp. Elk Grove, CA
87	BEAC 38	Glass		X		0.7163	-1.0331	24.79	$465	Copper	Sunburst Solar Energy Division Acro Energy Corp. Elk Grove, CA
88	IV	Glass			X	0.7317	0.6756	23.81		Copper	Suncor, Inc. Tempe, AZ
89	CP-3496	Glass		X		0.6644	-1.1818	23.69		Copper	Sun Devil Solar Collector Works Mesa, AZ
90	SE-32-DBC	Glass			X	0.7843	-0.8658	31.33		Copper	Sun Earth of California Petaluma, CA
91	CSBH-H SS	Glass			X	0.77	1.059	20.0		Parabolic concentrator	Sun Power Systems Sunnyvale, CA

Table 2-6. Solar collector test results. (Con't.)

Item	Model No.	Glazing Type		Absorber Coating		Efficiency Intercept %	Slope of Efficiency Line Btu/hr-ft^2-°F	Area of One Panel (Gross) ft^2	Cost per Panel $	Absorber Material	Manufacturer
		Single	Double	Non-selective	Selective						
					ALL COPPER ABSORBERS						
92	SL-3810	Glass		X		0.7729	-1.1231	24.04		Parabolic concentrator	Sun Resource Energy Systems Van Nuys, CA
93	V4896-TF	Glass		X		0.7348	-1.1253	32.40		Copper	Sunstone Energy Systems, Inc. San Marcos, CA
94	146-SC	Glass		X		0.7601	-1.0991	32.06		Copper	SunTherm Corp. Sylmar, CA
95	SWSC-117	Glass		X		0.7285	-1.1031	19.23		Copper	Sunwest Energy, Inc. Redding, CA
96	L-48	Glass			X	0.7138	-0.7088	31.66		Copper	Sunworks, Inc. Somnerville, NJ
97	SL4810	Glass		X		0.7729	-1.1231	30.80		Copper	Urja, Inc. Santa Ana, CA
98	323	Glass			X	0.7823	-0.9243	31.42		Copper	United Solar Association, Inc. Denver, CO
99	CPY-21-SGC	Glass			X	0.7457	-0.8757	19.81		Copper	US Solar Corp. Hampton, FL
100	WSD-7-31	Glass		X		0.7297	-1.1461	31.41		Copper	Western Solar Development, Inc. Vacaville, CA
101	1900	Glass		X		0.7444	-0.7195	31.5		Copper	Daystar Corp. Burlington, MA
102	520 (4X8)	Glass		X		0.6998	-1.3076	31.8		Copper	International Solar Products, Corp. Monterey Park, CA
103	323	Glass			X	0.7823	-0.9243	31.42		Copper	Pacific Resources, Inc. Honolulu, HI
104	PS-030	Unglazed		X		0.7833	-3.7926	29.93		Copper	Purex Pool Products, Corp. Industry, CA
105	GPS-030	Tedlar		X		0.6109	-1.1237	31.24		Copper	Purex Pool Products, Corp. Industry, CA
106	HWSG-724	Glass		X		0.6567	-0.9236	25.83		Copper	Purex Pool Products, Corp. Industry, CA
107	HWDC-724		Glass	X		0.6678	-1.1176	25.16		Copper	Purex Pool Products, Corp Industry, CA
108	SGC-37	Glass			X	0.7512	-0.7836	32.73		Copper	Solarglistics Corporation Northbrook, IL
109	L-25P	Glass		X		0.7312	-1.2511	25.46		Copper	Sunwest Solar Systems, Inc. Phoenix, AZ

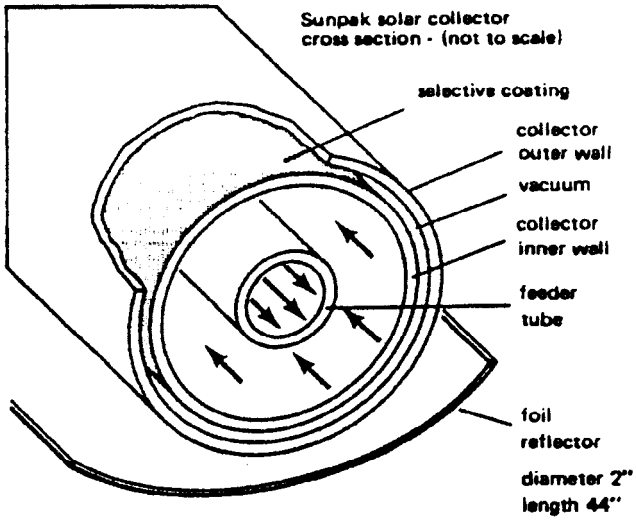

Figure 2-8. Evacuated tube solar heat collector.

2.1.10 Other types of solar collectors. The three most common types of solar collectors are flat plate collectors, evacuated tube collectors, and concentrating collectors. Due to certain cost and performance advantages, flat plate collectors have been used extensively for residential DHW and space heating applications. Evacuated tube and concentrating collectors are used mostly in solar applications requiring very high temperatures. Some applications requiring large solar arrays are using evacuated and concentrating collectors. A brief description follows.

2.1.10.1 Evacuated-tube collectors. Figure 2-8 shows an evacuated-tube collector. This type of collector uses a vacuum between the absorber and the glass outer tube to significantly reduce convection and conduction heat losses.

Evacuated-tube collectors operate essentially the same as flat-plate collectors. Solar radiation passes through the outer glass tube and is absorbed by the coated absorber. Heat energy is transferred to fluid flowing through the absorber.

Most evacuated-tube designs collect both direct and diffuse radiation efficiently, but certain types are specifically designed for more efficient collection of direct radiation. Although evacuated-tube collectors are considerably more expensive than typical flat-plate collectors, they are much more efficient and more cost effective when high collection temperatures are needed for operating absorption chillers or for industrial process heating.

They may not be as efficient as flat-plate collectors at low-temperature applications such as domestic water heating and space heating. For these applications, evacuated tube collectors should be judged on a cost per Btu basis to determine their effectiveness. Maintenance costs may be higher and heat dissipation coils may be required. Comparisons can be made using data similar to that in Figure 2-7 and Table 2-6, although evacuated tube collectors normally show a higher "all-day" performance than that indicated by the instantaneous values of Table 2-6.

2.1.10.2 Concentrating collectors. Concentrating or focusing collectors intercept direct radiation over a large area and focus it onto a very small absorber area. These collectors can provide very high temperatures more efficiently than flat-plate collectors, since the absorption surface area is much smaller. However, diffuse sky radiation cannot be focused onto the absorber. Most concentrating collectors require mechanical equipment which constantly orients the collectors towards the sun and keeps the absorber at the point of focus.

There are many types of concentrating collectors. The most popular types are the parabolic trough, the linear-trough fresnel lens, and the compound parabolic mirror. Figure 2-9(a) shows a linear concentrating or parabolic trough collector. It collects energy by reflecting direct solar radiation off a large curved mirror and onto a small absorber tube which contains a flowing heat transfer liquid. The absorber tube is encased in a glass or metal tube which may or may not be evacuated. This type of collector must track the sun and can collect only direct radiation.

Figure 2-9(b) shows a linear-trough, fresnel lens collector. In this design a curved lens is used to focus incoming rays onto a small absorber plate or tube through which the heat transfer liquid is circulated. This type of collector also requires a tracking mechanism and can collect only direct radiation.

Figure 2-9(c) shows a compound parabolic mirror collector. The design of the mirrors allows the collector to collect and focus both direct and diffuse radiation without tracking the sun. Periodic changes in the tilt angle are the only adjustments necessary.

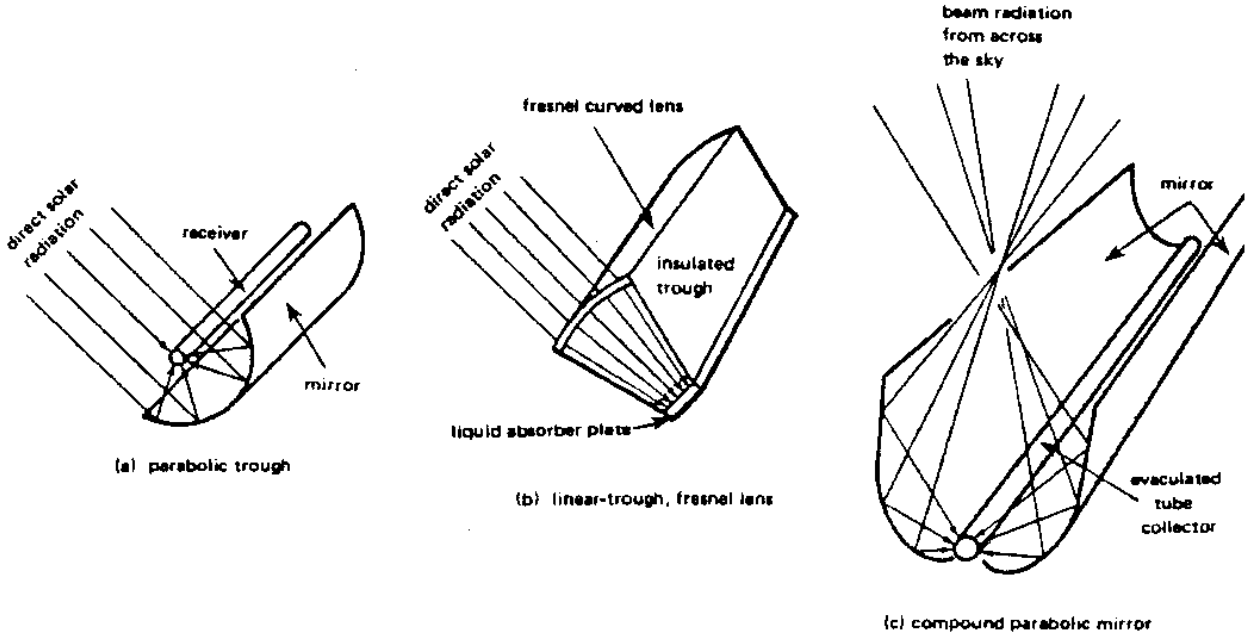

Figure 2-9. Concentrating collectors for solar energy.

Direct radiation is intercepted by only a portion of the mirror at a time, thus this collector does not collect as much solar energy as a focusing collector which tracks the sun. It is, however, less expensive to install and maintain. The absorber tube is encased within an evacuated tube to reduce heat losses.

Many other types of concentrating collectors have been developed which produce high temperatures at good efficiencies. However, the potentially higher cost of installing and maintaining tracking collectors may limit their use in some applications. These points should be addressed early in project development when tracking collectors are considered. In addition, concentrating collectors must be used only in those locations where clear-sky direct radiation is abundant. Testing requirements for concentrating collectors are referenced in Section 1.2.

2.2 Energy storage and auxiliary heat. Since effective sunshine occurs only about 5 to 6 hours per day (in temperate latitudes), and since heating and hot water loads occur up to 24 hours a day, some type of energy storage system is needed when using solar energy. The design of the storage tank is an integral part of the total system design. Although numerous storage materials have been proposed, the most common are water for liquid collectors and rock for air. These have the advantages of low cost, ready availability and well known thermal properties.

Precise heat storage sizing is not necessary, but economics and system design to determine the optimum range of sizes. The temperature range wherein useful heat is stored is important in determining optimum system size. If the volume of storage is too large, the temperature of the storage medium will not be high enough to provide useful heat to the building. Also, overdesigned storage requires excess floor space. If the storage is too small, the storage medium temperature will be too high, resulting in low collector efficiency.

Practical experience in the industry as well as computer simulations and experiments have resulted in general rules of thumb for storage sizing. These guidelines give storage sizes for which the performance and cost of active solar systems are optimized and relatively insensitive to changes within the range indicated.

The optimum size of storage for active solar systems is 15 Btu/deg. F/ft^2 of collector area (Kohler, 1978). The range is 10-20 Btu/deg. F/ft^2 (200-400 KJ/deg. C/m^2). For water or air systems application of the rule gives the following.

a. Water systems*. Since water has a specific heat of 1 Btu/lb-deg. F, then 15 lb of water storage are needed per square foot of collector or considering the density of water, 8.33 lb/gal or 62.4 lb/ft^3, then 1.8 gal of storage are needed for each square foot of collector (range 1.2 to 2.0 gal/ft^2). The range in SI units is 50-100 liters/m^2.

b. Air systems*. Since rock has a specific heat of 0.21 Btu/lb-deg. F, and rock densities (170 lb/ft^3) typically contain 20%-40% voids, then the optimum storage size is 0.8 ft^3 per square foot of collector (range 0.5 to 1.15 ft^3 per square foot of collector). The range in SI units is 0.15 to 0.35 m^3/m^2.

* Storage volumes in this range will store the equivalent of overnight to one full day of heating.

In general, for equal storage capacity, the rock pebble bed would have to occupy a volume 2-1/2 to 3 times larger than a water tank. Rock storage bins have higher structural requirements, and tend to lose more heat due to their greater surface area. Rock bins generally provide good temperature stratification; contrary to practice in conventional DHW systems, stratification is desirable in both water and air solar systems. NCEL has done studies to show that good stratification can add 5%-10% to overall system performances (Sharp and Loehrke, 1978). To achieve this, baffles or modified inlets to the tanks are used. However, specially designed tanks with baffles or diffusers are expensive and not readily available. To suppress convection warm water enters and leaves the top of the tank, and cold water, the bottom. In this way the hottest water goes to the load and the coldest to the collectors.

A typical DHW system is shown in Figure 2-10. Use of two tanks insures that when hot water from the first (tempering) tank is available, the auxiliary heat will not come on; also less total fuel will be used to bring the smaller second tank up to temperature. Single tank arrangements, while possible and economical, are not recommended due to the fact that they tend to activate the heating element every time there is a draw of water rather than wait for the solar collectors to provide additional heated water. Research is being done and new tanks designed to overcome this deficiency. The two-tank arrangement avoids this control problem. Two-tank arrangements are suited to retrofits since the second tank (the water heater) is already there. A variation would be to use a heat exchanger (copper coil) in the tempering tank collector loop for freeze protection. The tempering tank could then be an inexpensive unpressurized tank.

Another method of heat storage in air systems that is currently being investigated is latent heat storage. Latent heat is stored in a material as it changes phase from a solid to a liquid. Materials which have melting points near the temperatures supplied by solar collectors store heat as they melt and release it as they resolidify. The two materials which have received the most attention are salt hydrates and paraffins.

The advantage of latent heat storage is that it can store very large quantities of heat per pound of storage material. Therefore, less volume should be required for latent heat storage than for heat storage in rock beds. However, problems of slow solidification and low heat conductivity retards effective heat transfer to and from the material. As a result, a large surface area-to-volume ratio is required, which significantly increases the effective volume of latent storage.

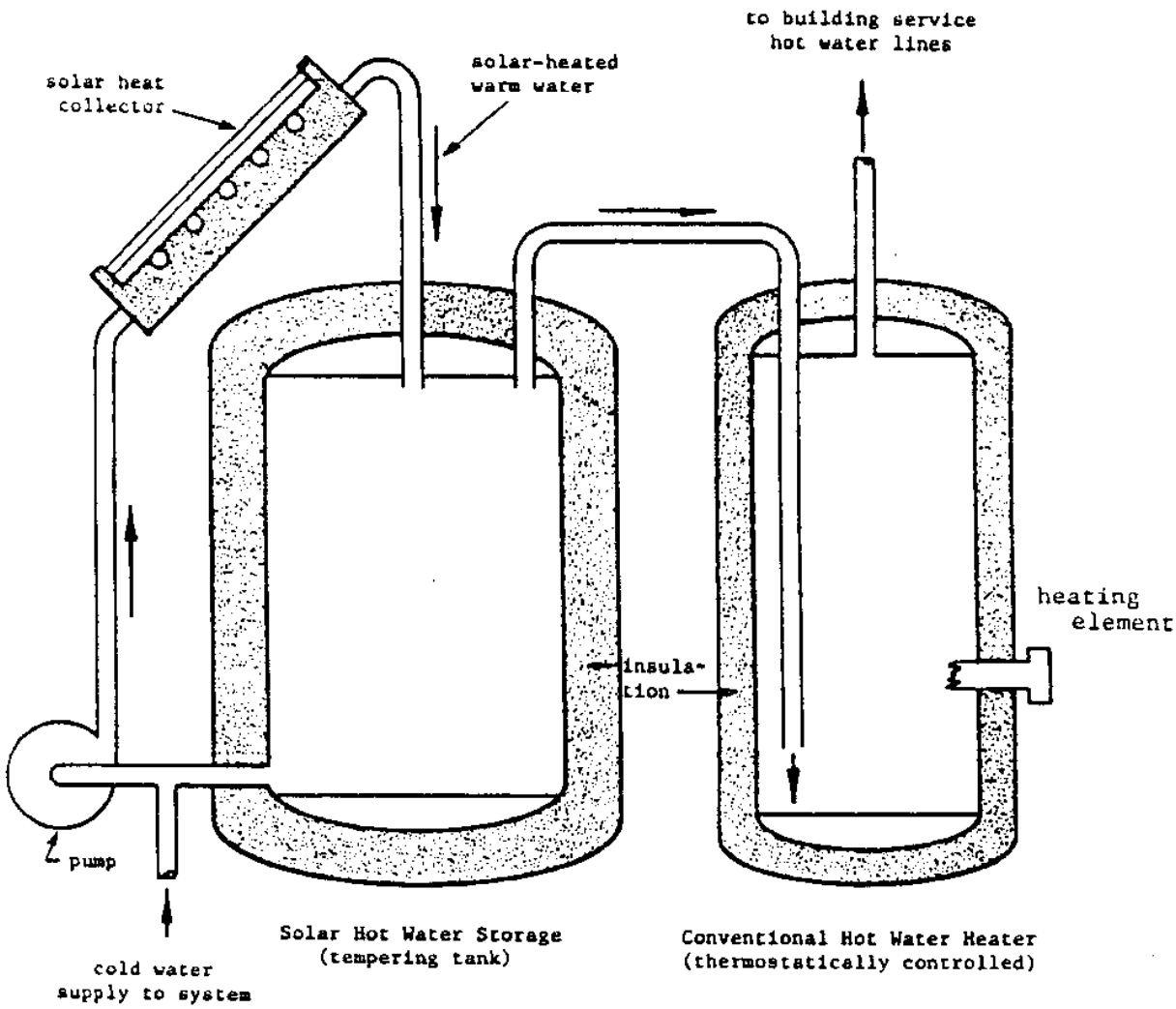

Figure 2-10. Schematic of potable hot water heating system using solar storage (tempering) tank ahead of conventional fueled or electric service water heater.

solar storage (tempering) tank ahead of conventional fueled or electric service water heater.]

Latent storage materials are often expensive when compared to rock. In addition, they must be packaged in individual containers to allow adequate heat transfer area. Many latent heat materials cannot withstand frequent recycling and must be replaced periodically. Research is being done by NCEL and others to develop practical latent heat materials which can withstand extended recycling. NCEL is investigating a dissolved salt storage unit that uses immiscible liquids for the heat exchange surface which greatly reduces the problem of crystallization during recycling. Initial tests have been encouraging.

Another major drawback of latent heat storage is that heat is stored at an average temperature with essentially no thermal stratification occurring in the storage unit. A high level of thermal stratification maximizes thermal performance because low temperature fluid can be delivered to the collectors and high temperature fluid can be delivered to the heat load. For example, the high degree of thermal stratification in rock-beds results in the delivery of 79 deg. F air to the collector and 120 deg. F to 150 deg. F air to the heat load. In comparison, latent heat storage in Glauber's salt occurs near an average temperature of 90 deg. F; thus air at 90 deg. F is delivered to both the collectors and the heat load. Due to the problems discussed, latent heat storage has not received widespread use.

Since it is not economically justifiable to store huge quantities of heat, most solar systems cannot be depended on to provide 100% of the building's needs. Depending on the geographical area and size of the system, about 40% to 80% of the heat requirement is the average to design for. Therefore auxiliary heaters are necessary. They should be sized to provide all the energy requirements, although in some cases, again depending on location, it may be possible to increase storage volume and provide less than 100% backup auxiliary heat. This is especially true if the use of passive solar designs can be incorporated with active systems. Passive designs are discussed briefly in Section 2.6.

The auxiliary heater should operate automatically as needed, use the most economical fuel, and share a common heat delivery system with the solar system. Often a heat pump is a good choice in that it can serve both as an auxiliary heater and work together with the solar system. In retrofit situations, the existing heater would be the choice.

2.2.1 Storage tanks. Water may be stored in a variety of containers usually made of steel, concrete, plastics, fiberglass, or other suitable materials.

Steel tanks are commercially available and have been used for water storage. They are available in many sizes and are relatively easy to install. However, steel tanks are susceptible to corrosion and should be lined or galvanized. Dissimilar metal at pipe connections should be separated by high temperature rubber connections or galvanic corrosion will occur. Steel tanks must be well insulated to minimize heat losses.

Concrete tanks are durable, but may be difficult to install. Concrete tanks cast in place, prefabricated septic tanks, or large diameter pipes may be used for water storage. A high temperature sealant or lining should be applied to the interior of the tank to prevent seepage of water through the tank. Although concrete is less conductive than steel, concrete tanks should also be insulated to reduce thermal losses. Leaks are difficult to repair.

Fiberglass and plastic tanks are corrosion resistant and easily installed. They are available in many shapes and sizes. Although many commonly fabricated tanks will begin to soften at temperatures above 140 deg.-160 deg. F, there are more expensive, specially fabricated tanks available that can withstand temperatures up to 250 deg. F. The types of plastics needed to store large quantities of water at high temperatures can be more expensive than steel.

When storage tanks are to be custom made, a calculation of heat loss against expected fuel cost inflation will almost always justify increasing insulation around the tank to R-19, 6 inches, compared with the usual 2 inches. HUD Intermediate Minimum Property Standards (U.S. Dept HUD, 1977) requires that tank losses be limited to 10% in 24 hours. Usually R-19 insulation will satisfy this requirement. It is a good practice to insulate tank supports from the ground if possible.

Costs of storage tanks vary considerably depending on the quality of construction and the distributor. Table 2-7 summarizes advantages and disadvantages and Table 2-8 gives approximate comparative costs for tanks of various materials. All storage tanks for liquids should be located so that if they leak, damage to the building will be prevented. The cost of housing the tank or burying it must be included in the total cost of the solar heating system. Buried tanks must be protected from ground water, and buoyant forces resisted. Underground tanks are not preferred, if other options are available. Tanks must be reasonably accessible for repairs. In very mild or warm climates, outdoor location may be feasible. Tank connections should comply with local codes with regards to backflow preventers, safety relief valves, etc. (see Section 2.9.3).

2.3 Domestic hot water systems (DHW). Domestic hot water systems (DHW) (without space heating) may use lined, insulated, pressurized tanks similar to the conventional water heater. Appropriate temperature and pressure relief valves must be used. Since it is possible for solar collectors to reach very hot temperatures, a tempering or mixing valve should be used. A typical two-tank installation with proper valves and connections would be as shown in Figure 2-11 (Cole et al., 1979).

To size the collectors and storage tank it is necessary to estimate or measure the hot water consumption of the facility or building. For typical family residences, 20 gal/day/person of hot water is normally consumed. If it is estimated the hot water consumption is larger than average, use 30 gal/day/person. So, 80 to 120 gal/day should serve a typical four-person family. For estimates of other Navy facilities refer to DM-3 series, Plumbing Systems. Table 2-9 (Werden and Spielvogel, 1969) gives water consumption data for different types of conventional facilities and may be used to supplement the DM-3 data.

Table 2-7. Advantages and Disadvantages of Tank Types (Cole et al., 1979).

Advantages			
Steel Tank	Fiberglass Tank	Concrete Tank	Wooden Tank With Liner
Cost is moderate. Steel tanks can be designed to withstand pressure. Much field experience is available. Connections to plumbing are easy. Some steel tanks are designed specifically for solar energy storage.	Factory insulated tanks are available. Considerable field experience is available. Some tanks are designed specifically for solar energy storage. Fiberglass does not rust or corrode.	Cost is low. Concrete tanks may be cast in place or may be precast.	Cost is moderate. Indoor installation is easy.
Disadvantages			
Steel Tank	Fiberglass Tank	Concrete Tank	Wooden Tank With Liner
Complete tanks are difficult to install indoors. Steel tanks are subject to rust and corrosion	Maximum temperature is limited even with special resins. Fiberglass tanks are relatively expensive. Complete tanks are difficult to install indoors. Underground installation not recommended. Fiberglass tanks must not be pressurized.	Careful design is required to avoid cracks and leaks. Concrete tanks must not be pressurized. Connections to plumbing are difficult to make leaktight.	Maximum temperature is limited. Wooden tanks must not be pressurized. Wooden tanks are not suitable for underground installation.

Table 2-8. Storage Tank Costs.[a]

Type of Installations	Cost Per Gallon for Tank Size (gal) -						
	80	120	300	500	1000	2000	4000
Steel, unlined, nonpressurized[b]			2.25	1.75	1.40	1.10	1.00
Steel, unlined, 120 psi[b]	4.00	3.50	2.50	2.40	2.10	2.00	2.00
Steel, glass lined,[b] 125 psi	6.00	5.50	5.50	--	--	--	--
.03-inch EPDM liner for unlined tank	1.10	1.00	0.90	0.80	0.70	0.60	0.40
Steel, stone lined, 125 psi	8.00	7.00	--				
Fiberglass tank, or polyethylene, nonpressurized	2.75	2.50	2.00	1.80	1.60	1.50	1.20
Concrete	3.00	2.80	2.40	2.20	2.00	1.60	1.40
6-inch insulation and sheath				2.00	1.60	1.20	1.00
Normal installation above ground including pad	1.50	1.50	1.50	1.40	1.30	1.00	0.75

[a] All prices, $/gal, Oct 1983, Los Angeles area.

[b] Includes supports and fittings; add $0.15/gal for phenolic lining of unlined tanks.

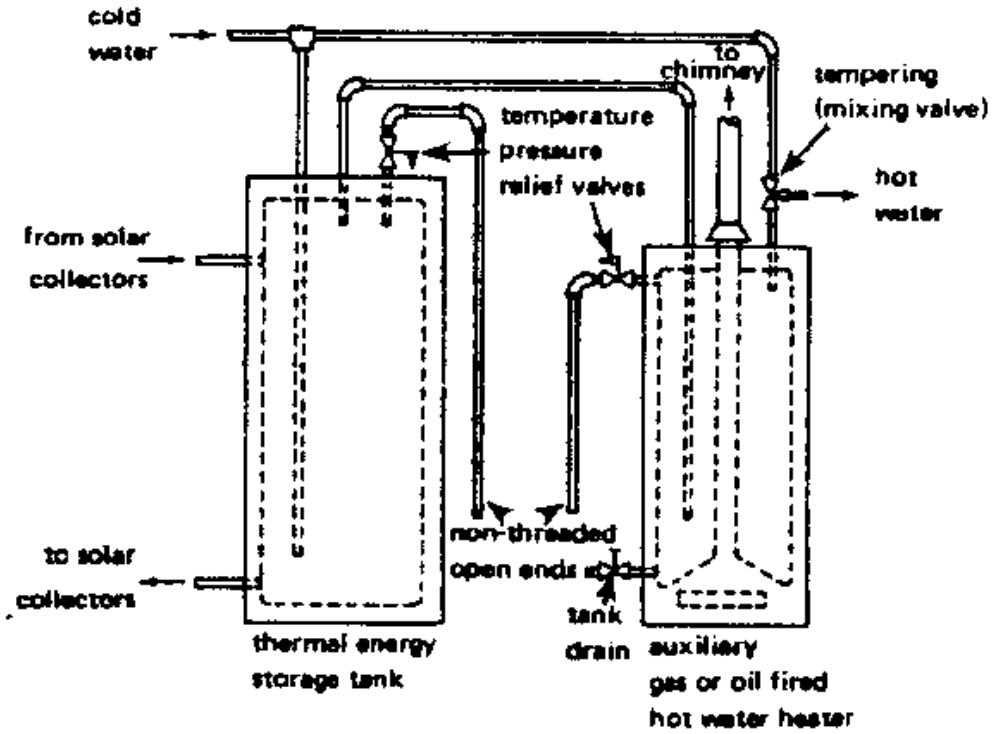

Figure 2-11. Typical DHW installation.

Table 2-9. Hot Water Demands and Use for Various Types of Buildings.

Type of Building	Average Day
Men's Dormitories	13.1 gal/student
Women's Dormitories	12.3 gal/student
Motels (number of units):	
20 or Less	20.0 gal/unit
60	14.0 gal/unit
100 or More	10.0 gal/unit
Nursing Homes	18.4 gal/bed
Office Buildings	1.0 gal/person
Food Service Establishments	
Type A - Full meal restaurants and cafeterias	2.4 gal/average[a] meals/day
Type B - Drive-ins, grilles, luncheonettes, sandwich & snack shops	0.7 gal/average[a] meals/day
Apartment Houses (number of apartments):	
20 or Less	42.0 gal/apartment
50	40.0 gal/apartment
75	38.0 gal/apartment
100	37.0 gal/apartment
Over 130	35.0 gal/apartment
Elementary Schools	0.6 gal/student[a]
Junior & Senior High Schools	1.8 gal/student[a]

[a] Per day of operation.

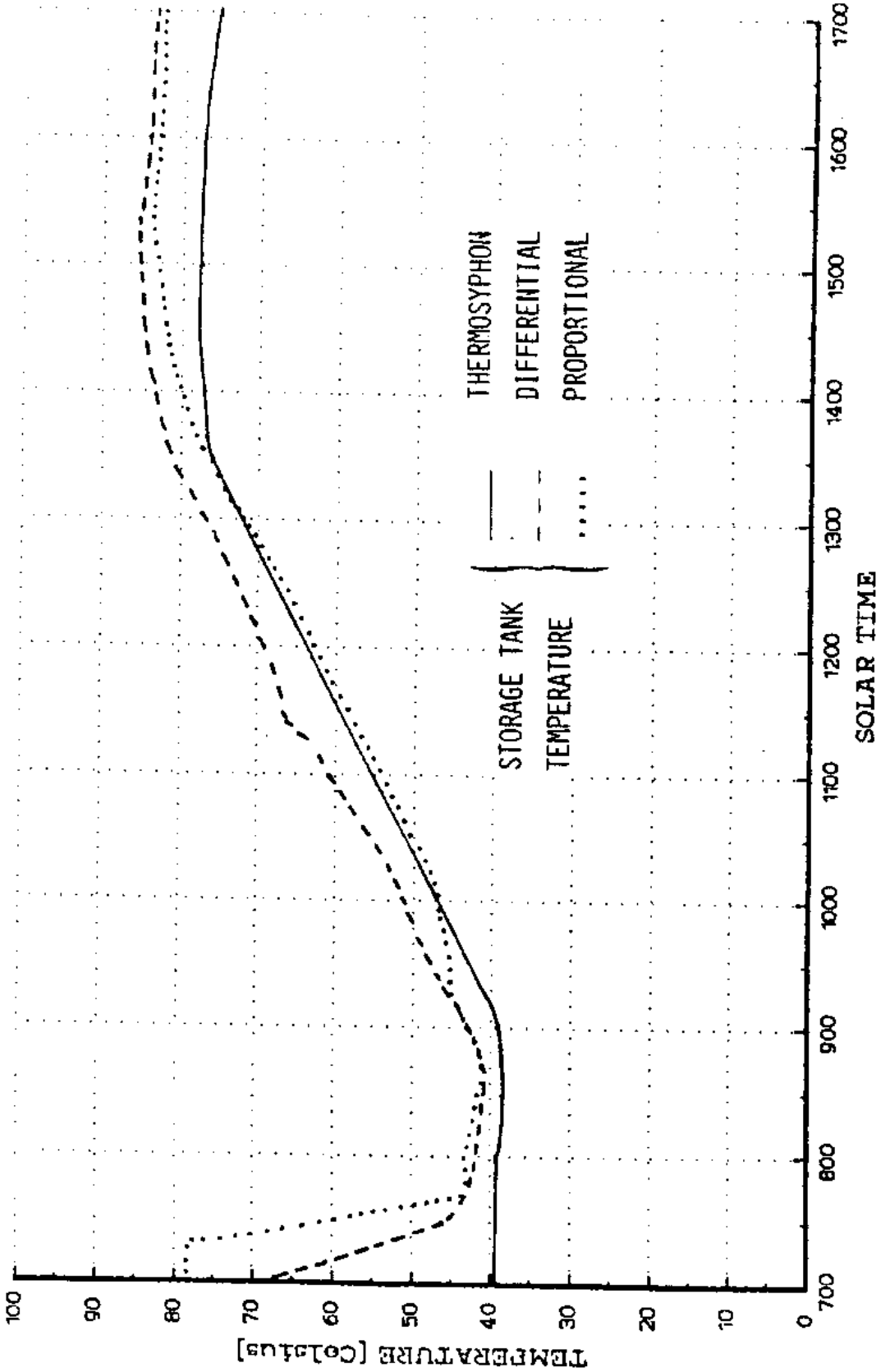

Figure 2-11a. THERMOSYPHON SYSTEM TESTS.

2.4 Thermosyphon, batch, and integral storage collector systems. A variation of the DHW system is the thermosyphon system which uses the principle of natural convection of fluid between a collector and an elevated storage tank. As water is heated in the collector it rises naturally to the tank above. The bottom of the tank should be mounted about 2 feet higher than the highest point of the collector. This is the main disadvantage in that structural requirements will often prohibit the weight of a water tank on a high point of the structure. Also, since the thermosyphon system is connected directly to the potable water supply it is difficult to protect from freezing. However, new models are coming on the market that use freon as the heat transfer fluid, solving the freezing problem. The advantages of thermosyphon units are that they do not require pumps or electronic control systems. Hence the costs to purchase and operate these components are eliminated. Also these systems save by virtue of eliminating these components as a source of reliability or maintenance problems. A last advantage is that they are completely independent of electrical grid power.

Batch and integral storage collector (ISC) systems are similar in that they also do not have pumps or controllers. Batch systems (often called "breadbox" also) are simply a black painted storage tank (or several) installed in a weathertight box and glazed with glass or plastic. They depend on their heat transfer by flow of water through the system initiated whenever there is demand for water by the occupants.

Integral storage collectors put the tank and collector together to form a large mass of fluid to be heated by the sun. The intent is to have a large enough mass of water that freezing will not be a problem except in the severest of climate. Surprisingly only about 30-40 gallons of water are needed to accomplish this over most of the United States. ISC systems also depend on system demand for their flow, but some models have also been configured to use the thermosyphon principle.

The testing of these units is different than regular solar collectors since the ASHRAE 93-77 standard explained in Section 2.1.9 does not apply. These units must be tested as "whole systems". The method is given in ASHRAE Standard 95-1981 (Section 1.2). At the time of this edition of the handbook much of this data is just becoming available. The trend seems to be that thermosyphon systems are probably the most efficient followed by ISC and batch systems in that order.

NCEL has installed and tested a thermosyphon system and compared its performance to a pumped system that uses a differential (on/off) controller and one with a proportional (continuous) controller. As shown in figure 2-11a, the tank temperature rise for a one-day test was very similar for all three systems (Durlak 1982). Although the performance of the thermosyphon unit was very slightly lower it is not enough to rule out the use of these systems especially when their advantages of improved reliability and maintenance are considered. The important conclusion of these tests is that the performance is similar enough that the choice of which to use can be made by considering other pertinent factors of the installation.

The results of system tests on these models are reported in the Directory of SRCC Ratings (Section 1.2).

Though slightly lower in performance, the inherent simplicity and implicit lower cost make these systems an attractive alternative. The user should insure that the freezing problem is adequately addressed should one of these models be used.

2.5 Space heating and DHW systems. Space heating systems are a simple extension of the DHW systems. The collectors and storage tank need to be resized to provide the greater loads. A heat delivery system is added and the auxiliary heater (or existing heater) is connected in as backup. The design of the space heating system, if a retrofit, will depend on the existing system. Water-to-air heat exchangers may be placed in existing ductwork, in which case, an unpressurized, unlined tank may be used and represents a minimum heating system as in Figure 2-12. To provide corrosion and/or freeze protection the use of a closed collector loop and heat exchanger are required as in Figure 2-13. The cautions given in Figure 2-5 regarding toxic heat transfer fluids must be observed.

The most versatile system would be as shown in Figure 2-14 in which space heating and DHW are provided. Remember that 100% backup capability is needed but that oversizing is not necessary. Auxiliary heat can be used directly such as a heat pump or separate furnace or it could be added to the main storage tank using a heat pump, a separate boiler, or electrical resistance heating.

DHW could be added to Figure 2-12 and 2-13 by adding a preheat coil in the storage tank. Figure 2-12 has the potential to provide some building cooling by using the collector at night to radiate heat to the sky and storing cool water for use during the day. Or a heat pump could be used to cool the building, reject heat to the storage tank during the day, and then, as before, cool the tank at night through the solar collectors. Unglazed collectors are superior to glazed collectors for this application. There are many variations that could be used with the configurations given in Figures 2-12 through 2-14.

Air type space heating systems are sometimes used and a typical system is shown in Figure 2-15 (see Table 2-1 for advantages of air versus liquid). The heat storage tank is replaced by a rock bed (nominally 1-3 inch diameter). Rock provides very desirable temperature stratification. Designs should emphasize minimum pressure drop through the rock bed. The rocks carefully washed and placed can be stored in a bin, which should be insulated, or beneath the building if this is feasible. Keep dust to a minimum. Heat collected by the collectors is blown through the rock bed from top to bottom. Heat is delivered from storage to the building by circulating air in the reverse direction, bottom to top. Note that in contrast to water storage, heat cannot be added to and removed from the rocks at the same time. Hollow core concrete wall panels and decks have been used for solar heat storage and air ducts. They provide thermal mass and air flow passages in one design. Attention to proper sealing is necessary to prevent dust contamination.

During heat collection, the rocks at the top of the bin will attain a temperature nearly equal to that of the incoming solar heated air, while the air leaving the storage will be delivered to the collectors at the minimum

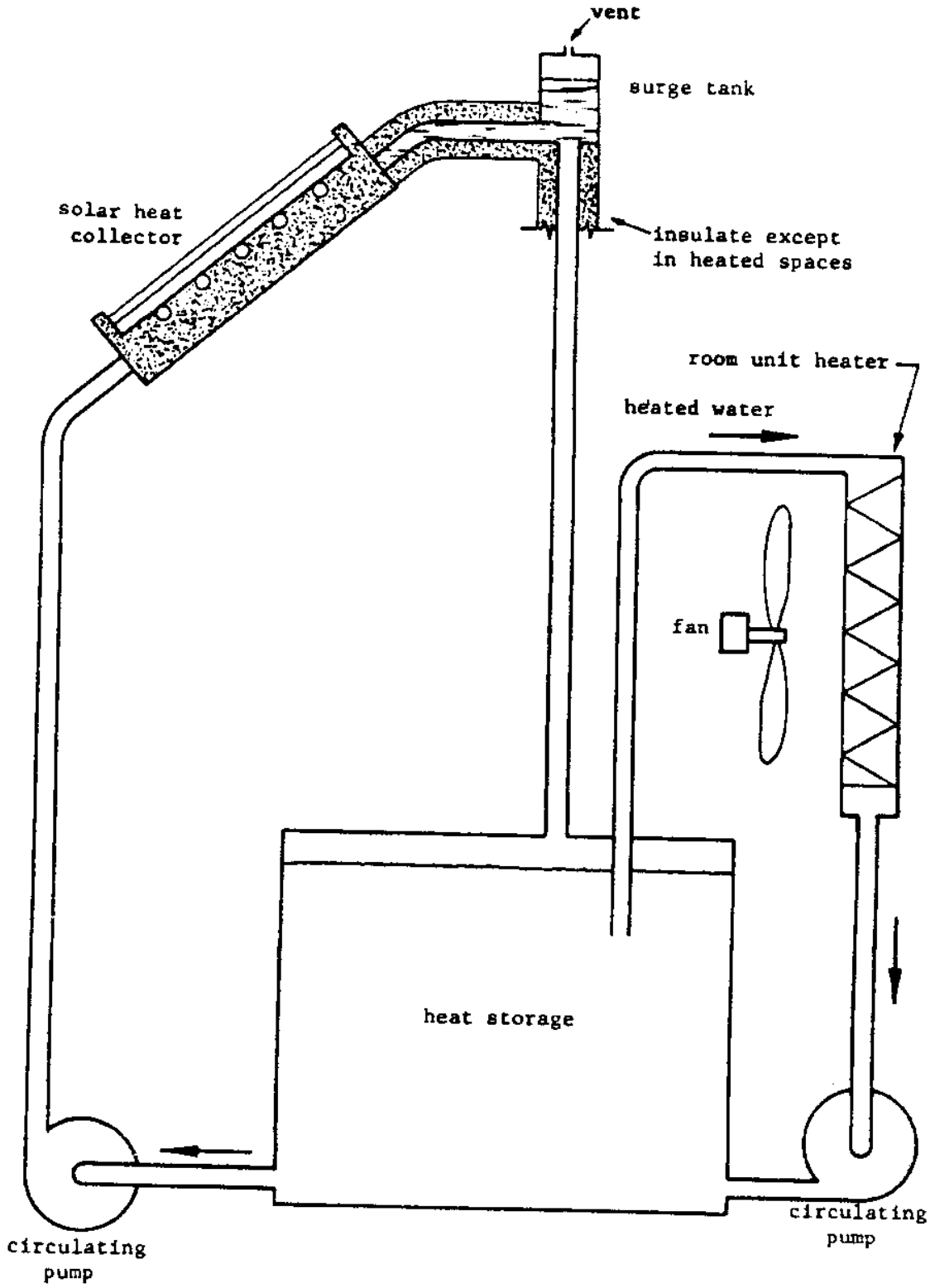

Figure 2-12. Minimum heating system, showing relationship of collector, storage, and room unit heater.

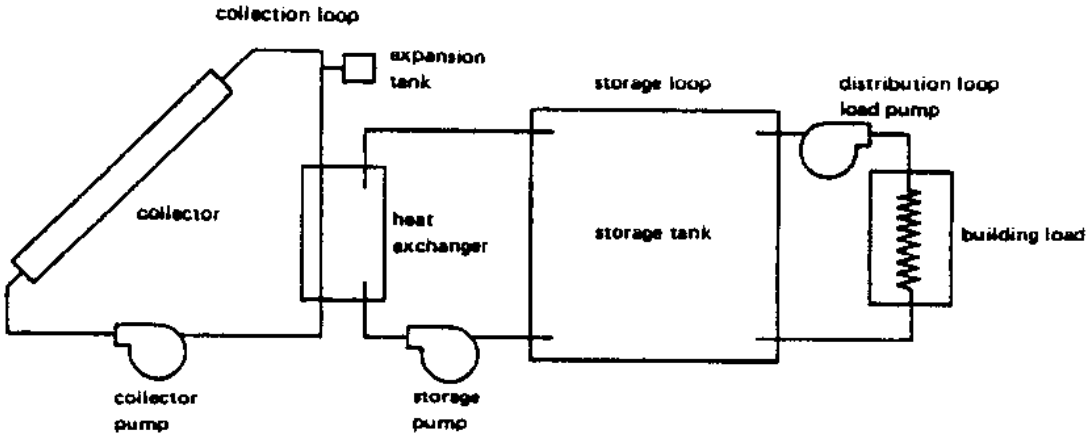

Figure 2-13. Space heating system with closed collector loop.

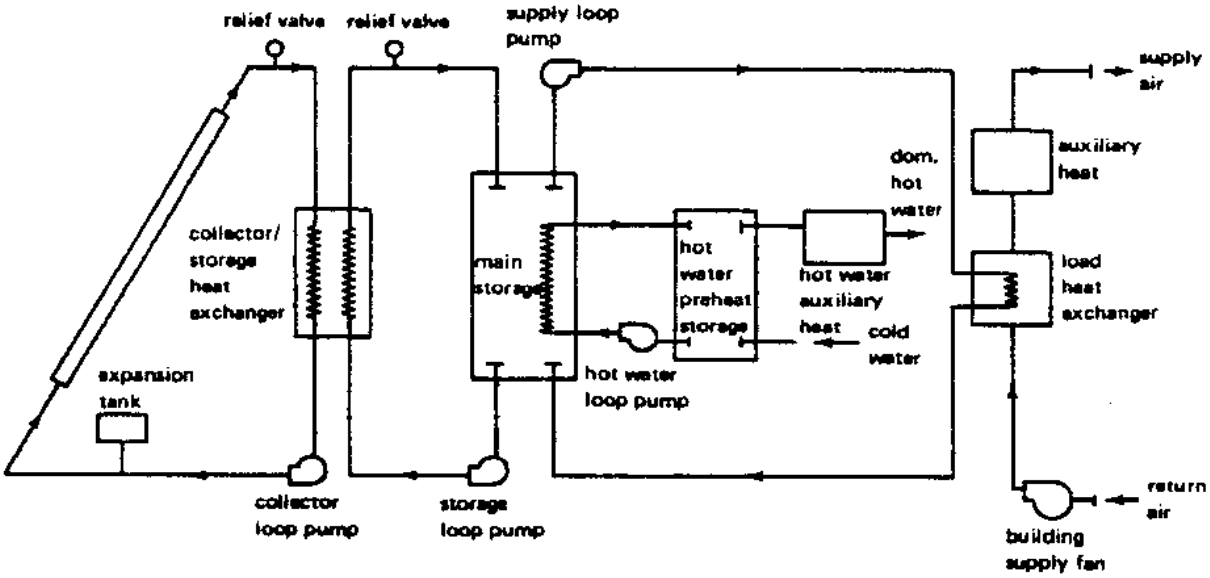

Figure 2-14. Space heating and domestic hot water system.

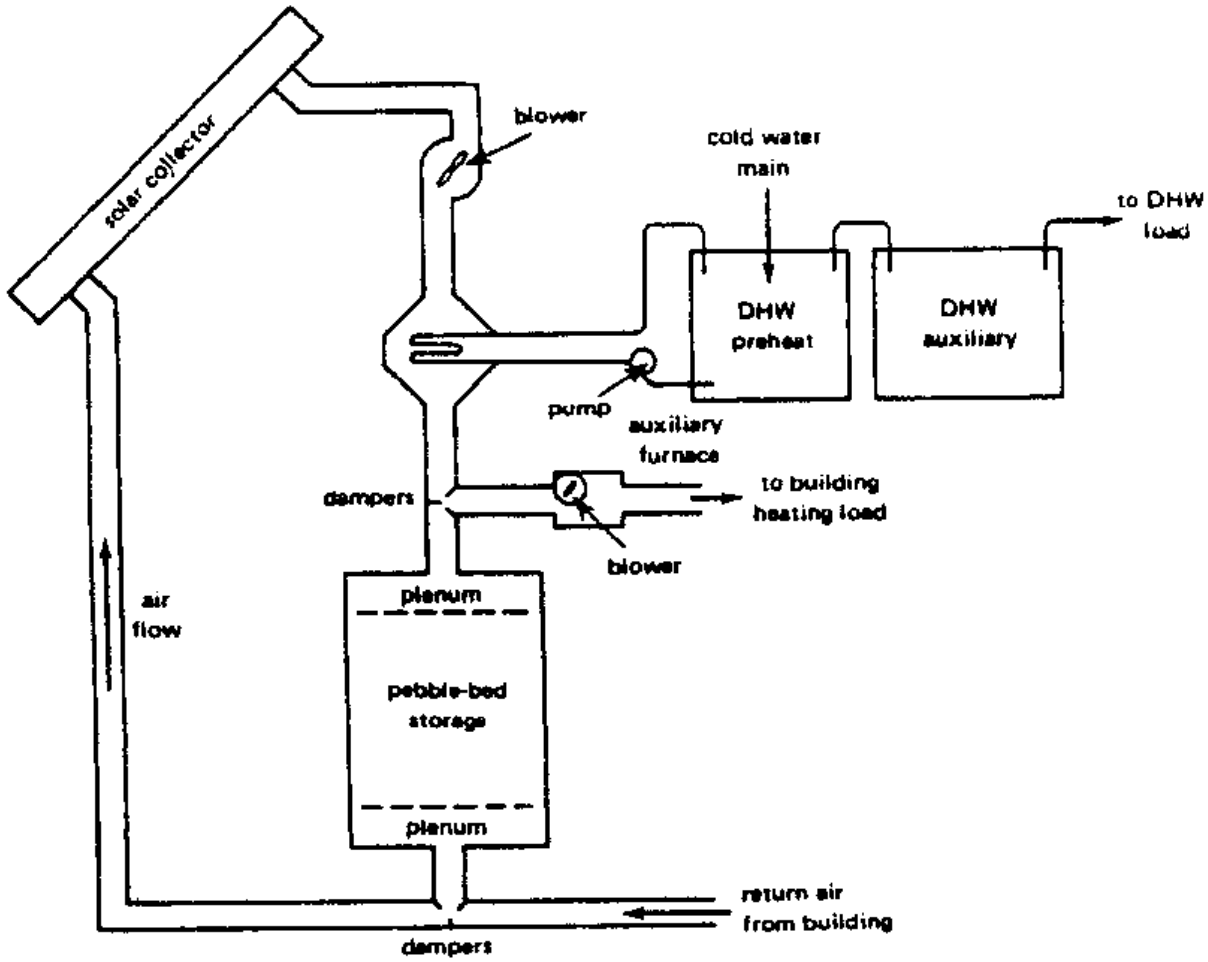

Figure 2-15. Typical air-type space heating system.

temperature of the rocks. The conduction between the rocks is small, thus with no air circulation the rock bet will remain stratified with the top of the rock bed warmer than the bottom. Also, limited conduction and convection in the rock-bed significantly reduces heat loss from the rock-bed.

Heat is drawn from the storage by circulating building air directly through the rock bed from bottom to top. The air will then be delivered to the building at a temperature near the maximum temperature of the collectors. If additional heat is required, supplementary heat is added down-stream from the storage unit. This system allows the rock bed to deliver useful heat until all of the rocks are at room temperature. See Duffie and Beckman (1974) for design of packed bed rock storage.

A variation is a no-storage air heating system which circulates heated air when available. Performance is limited to daytime heating due to the lack of storage, but such systems are well suited to warehouses and factories which have mainly daytime operations.

DHW is provided in Figure 2-15 by pumping the water in the preheat tank through an air-to-water heat exchanger placed in the return air duct from the collectors. This is not very efficient and is one of the disadvantages of the air system. It would, perhaps, be just as cost effective to have a separate small liquid system (say two collectors) to provide DHW.

Both air and liquid space heating systems require a heat delivery network to transfer heat from storage to the building. Most of the buildings in the United States are heated by circulation of warm air through the building. The air is usually heated in a central location and ducted to the individual rooms. This method is used particularly in residential buildings.

Hydronic heating is another common heat distribution method. In hydronic heating systems hot water or steam is circulated through pipes to "convectors" located in the individual rooms of a building. Modern hot water convectors are comprised of one or more finned tubes located on the wall near the floor. These baseboard heaters deliver heat to the room mainly by convection as air moves through the fins.

A less common heating system consists of lengths of tubing embedded in the floors, walls, or ceilings of the living space. Warm water is supplied to the tubes by a boiler and the heat is transferred to the room by convection and radiation.

2.5.1 Heat distribution for liquid-type solar systems. The temperature requirements of a hydronic heating system are dependent on the amount of heat exchanger surface. Most baseboard heaters have comparatively small surface areas, so they require higher temperatures, typically about 180 deg, F. If larger heat transfer areas are available as in older or modified hot water systems, temperatures of 120 deg. F may be sufficient. Temperatures of 100 deg. F are adequate for the system which uses entire floors, walls, and ceilings as radiator surfaces (Lof, 1977).

During the winter, typical liquid-type solar systems are seldom operated at delivery temperatures above 150 deg. F. Thus it is evident that the use of solar heated water in standard baseboard heaters is impractical. Only modified baseboard heaters of adequate size or radiant panels are suitable for use in hydronic systems which use solar heated water.

One of the most economical means of auxiliary heat supply and heat distribution for liquid-type solar systems involves the use of a warm air system. A typical system is illustrated in Figure 2-16. In this system the warm air furnace is located downstream from a liquid-to-air heat exchanger which is supplied with solar-heated water. The furnace can then serve to boost air temperature when insufficient heat is available from the solar heated water, or it can meet the full heat load if no heat is available in solar storage. Auxiliary heat can be supplied by a gas, oil, or electric furnace, or by the condenser of an air-to-air heat pump.

Another method of heat distribution involves the use of a water-to-air heat pump which draws heat from the solar storage tank and pumps it to a condenser coil which is placed in a central air duct. The advantage of this system is that it can effectively use heat from solar storage at temperatures down to 45 deg. F, thus more of the stored heat is available. Also, average storage temperatures are lower, resulting in significantly increased collector efficiency. Heat pumps are discussed in Section 2.5.3.

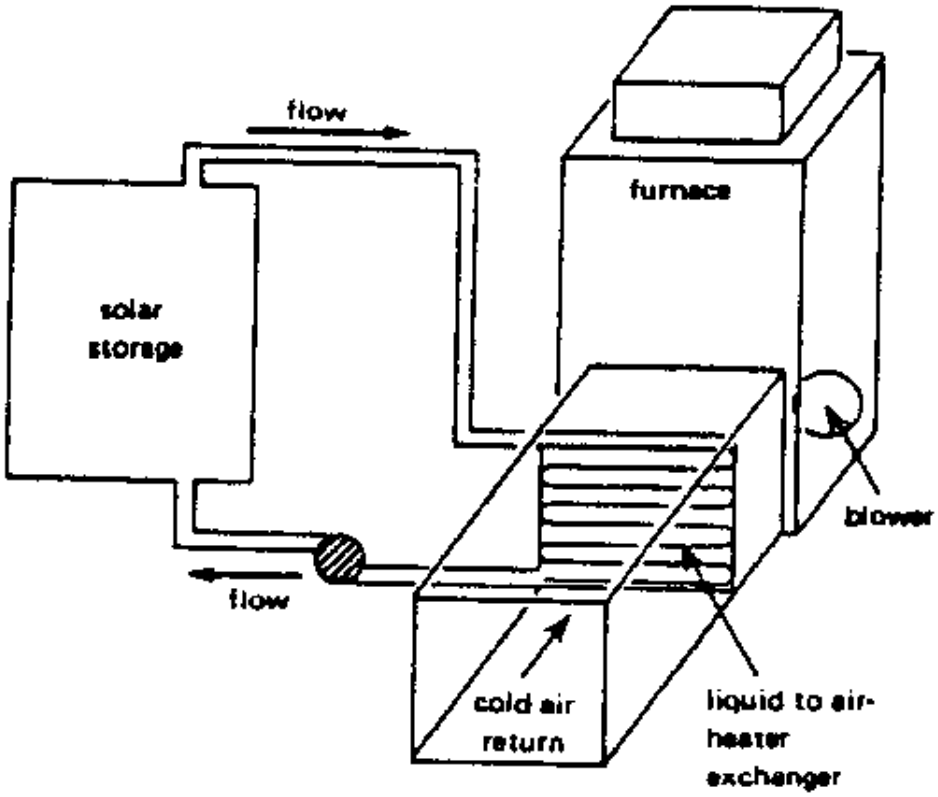

Figure 2-16. A liquid-to-air heat delivery system.

2.5.2 Heat distribution for air-type solar systems. The pipes and pumps of the liquid-type system are replaced by air ducts and fans. The warm air system is obviously the best heat distribution system for use with an air-type solar system. The ability to circulate building air directly through the collectors is one of the major advantages of an air-type solar system. The rock bed storage also works best with a warm air system.

Although warm air as low as 100 deg. F can be used to heat an occupied building, most existing warm air systems are sized assuming warm air temperatures of 120 deg. F to 150 deg. F. Typical mid-day collection temperatures usually range from 130 deg. F to 170 deg. F. Maximum storage temperatures are typically around 140 deg. F at the end of the collection period. Thus the heating load can be met by the temperature of the solar heated air a large portion of the day. When storage temperatures are insufficient to maintain the desired temperature in the building, heat from an auxiliary source must be added to supplement the solar heated air. The auxiliary furnace is located downstream from the rock bed so that the rock bed serves as a preheater for the furnace. This arrangement allows the rock bed to deliver useful heat until all of the rocks are at room temperature.

An air handler unit provides the dampers and blowers necessary to direct air circulation between the solar collectors, rock-bed, and building as needed. An air handler unit may be more expensive than the combined cost of individual dampers and blowers, but it will probably be less expensive to install. It is also more compact.

2.5.3 Heat pumps. Heat pumps have been mentioned in previous sections as a possible choice for auxiliary heaters. Some manufacturers are combining solar systems with heat pumps for the purpose of reducing auxiliary energy costs. When a heat pump and a solar system are combined in this manner, the system is usually called solar assisted or solar augmented heat pump (SAHP) system.

Solar assisted heat pump systems can be configured in many different ways. For example, the solar collectors can be either water or air types, the heat storage medium can be water or a solid material such as rock or brick, and the heat pump can be of either the air-to-air design or the water-to-air design. But heat pumps have a characteristic which can limit their effectiveness: the efficiency and capacity of a heat pump decreases as the temperature of the heat source (usually outdoor air) decreases. This deficiency can be overcome, however, by using solar collectors to gather the sun's energy for the purpose of keeping the heat source in the temperature range required for efficient heat pump operation.

a. Air-to-air heat pumps. Some air-to-air heat pumps function very well as an auxiliary heater at temperatures down to 20 deg. F. Below these temperatures, they suffer in efficiency and performance. When solar assisted by heat from a rock-pebble storage bed and air collectors, the heat pump adds much to the performance of the solar energy system. Without such a solar assist, air-to-air heat pumps have limited utility in cold climates. Their use should be carefully checked with the local utility and pump manufacturer. The heat pump also provides cooling during the summer. It thus has year-round utility. Heat pumps should be comparison-shopped. The purchaser should look at the cost, performance, service, and expected life. Units differ considerably from manufacturer to manufacturer (Montgomery, 1978).

b. Liquid-to-air heat pumps. The liquid-to-air heat pump is an ideal auxiliary heater when coupled with liquid solar storage. It operates at very low cost. And it greatly enhances solar energy collection by drawing down the temperature of the solar storage water to as low as 45 deg. F. It should be considered for all installations, except those with existing fossil fuel furnaces and no need for summer cooling, (Montgomery, 1978).

Out of the many SAHP configurations which could be used, the two most in use are called the "series" and "parallel" configurations. Figure 2-17 is a series SAHP system. When the system is used for heating, water from the storage tank is circulated through water-cooled collectors where it is heated before returning to the storage tank. Warm water from the storage tank is also circulated through a water-to-air heat pump. Heat is removed from the water and transported to the indoor air by the heat pump and the water returns to the storage tank at a lower temperature. If heat is added to the water in the tank faster than it is removed by the heat pump, the

temperature of the water will rise. When the water temperature is high enough (about 104 deg. F), heat can be extracted directly from the water by means of water-to-air heat exchanger. In this mode of operation, the heat pump is shut off. Auxiliary electrical resistance heaters are provided to make up the balance of the heat load if the heat from the heat pump or water air heat exchanger is not sufficient to meet the demand. Normally this could be "off-peak" power for the auxiliary heater.

When used for cooling, the heat pump transports heat from the building to the water in the storage tank thereby causing the temperature of the water in the tank to rise. During spring and fall, when it is not unusual to have a light cooling load during the day and a light heating load at night, the heat in the storage system is simply shuttled from the building to storage during the day and from storage to the building at night, and the solar collectors are used only to make up for lost heat. During periods of prolonged cooling demand, the heat pumped into the storage tank might be sufficient to cause the temperature of the water to rise to where the heat pump will no longer operate. Thus, provision must be made for rejecting excess heat. One method is to add a cooling tower to the system to cool the water. Another method is to circulate water through the solar collectors at night and reject heat by radiation to the night sky. During periods of high cooling load it is not desirable to also add heat to the storage tank by circulating water through the solar collectors. Therefore, when the system is in the cooling mode the solar collector circuit can be used to heat DHW.

The "parallel" SAHP system is shown in Figure 2-18. The solar heating system and the heat pump operate in parallel. Solar heat is used directly rather than being transferred to a storage medium and then transported into the building with a heat pump. This system is essentially a direct solar heating system with an air-to-air heat pump as a backup heating system.

The choice of a "best" system is difficult to make due to the many variables involved. For example, in addition to the two configurations shown in Figures 2-17 and 2-18, one could examine a series system with low cost (unglazed) collectors, or a series system with air-collectors and rock storage, or a parallel system with low cost collectors, etc. Each system would be highly dependent on geographical location, type of construction, etc. One such analysis done at NCEL comparing several systems to a stand-alone air source heat pump, showed the "parallel" system to have the best comparative performance (Kirts, 1978). More information about heat pump systems can be found in Kirts (1978).

Each heat pump configuration should be considered on a case-by-case basis. The analysis of these systems is beyond the scope of the worksheets given in this report, and the reader is directed to more sophisticated computer programs such as those in Durlak (1979b).

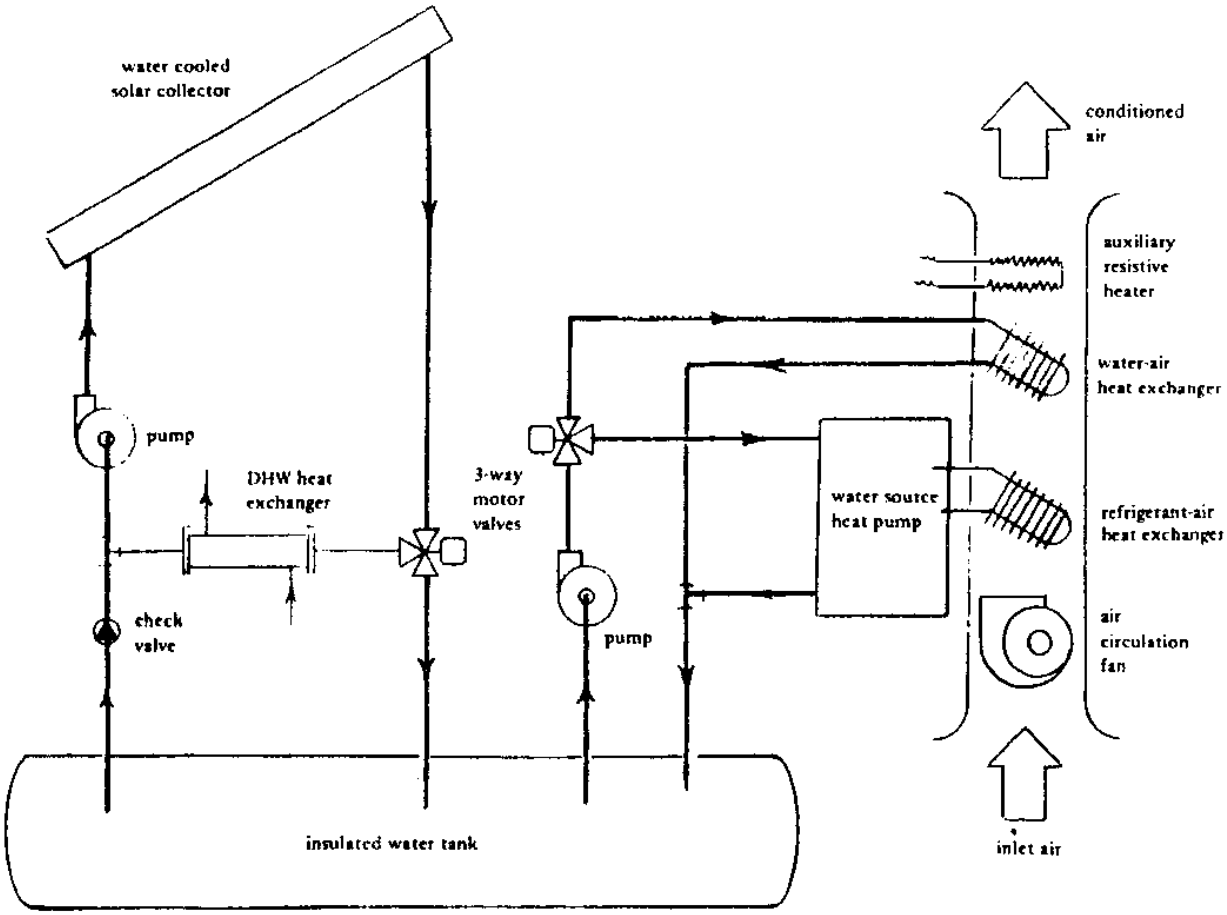

Figure 2-17. Series-connected, solar-assisted heat pump system.

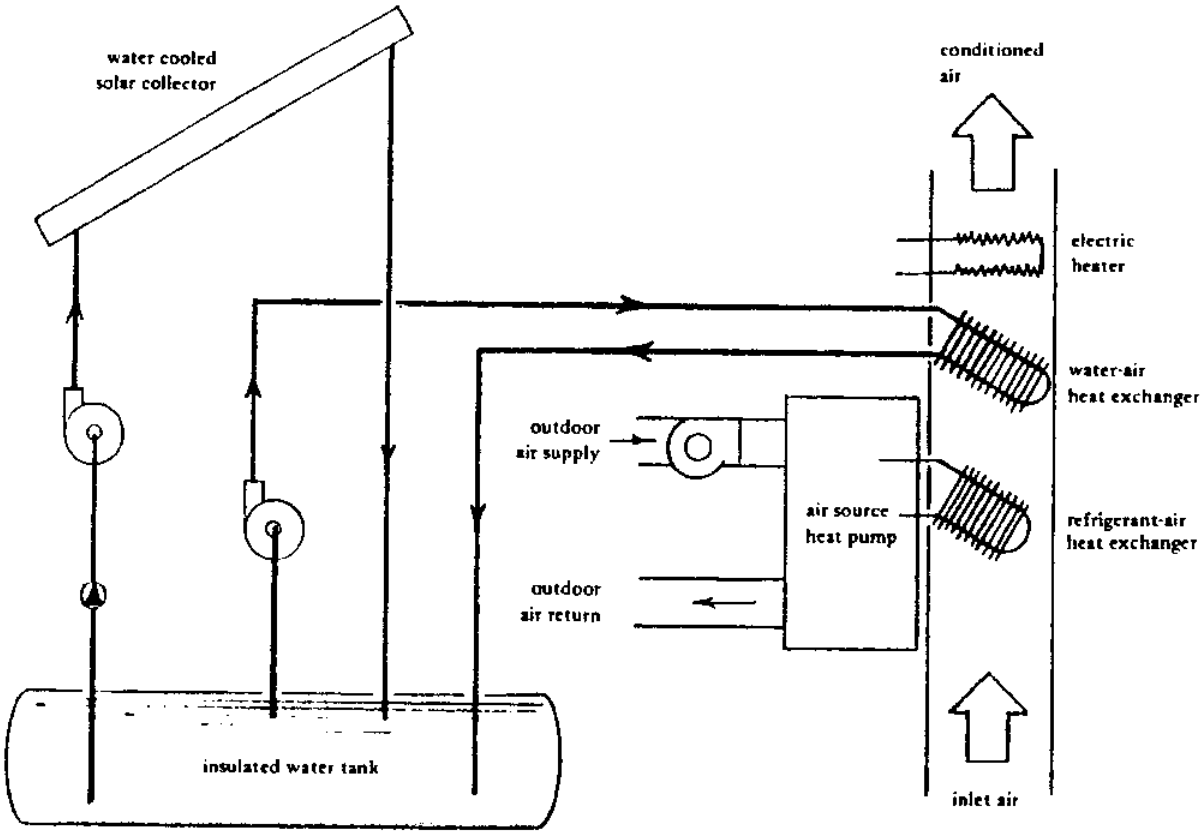

Figure 2-18. Parallel-connected, solar-assisted heat pump system.

2.6 Passive systems. NCEL has published a contract report, "Passive Solar Design Procedures for Naval Installations" (see references) that is the principal Navy reference on this subject. It contains data and worksheets to size passive so]ar designs at 200 geographical locations. Over 100 different passive designs can be considered and the method is applicable for single family residences, family townhouses, dormitories (i.e. BEQ's), small offices, and other concrete block buildings. While the "Passive" report should be consulted for detailed information and sizing, this section of the Military Handbook is retained to provide an introduction and "rules of thumb" for passive solar techniques.

A "passive" solar energy system is one which uses the building structure as a collector, storage and transfer mechanism with a minimum amount of mechanical equipment. Some would include a thermosyphon, batch, and ISC systems in this definition. As a rule, passive systems are generally difficult to retrofit Another disadvantage is that the owner or occupant may be required to perform daily tasks, such as covering a south facing window at night, opening and closing shutters, etc. This is particularly significant in Navy housing where the occupants are more transient and have less incentive to do these maintenance items. Although the specific arrangements vary, all of these systems rely on direct solar heating of storage. The storage then heats the house. A few examples are shown in Figure 2-19 (Barnaby et al., 1977).

Given the solar gain available on a vertical surface, the simplest and most obvious means of solar heating is just to let the sun shine in through large, south-facing windows. In fact, in a house with any south-facing windows, that is what is already happening to some degree. But the sunshine through the windows seldom heats the whole house. There are two reasons for this. First, most houses do not have enough south-facing glass. Second, houses lack enough storage to soak up the heat and keep it until night. Even rooms that overheat during the day cool off all too rapidly in the evening.

On many buildings it is possible to add south-facing windows or skylights to increase direct solar heating. However, the extra window area can cause a "fry or freeze" situation unless storage and night window insulation is added as well. There must also be provisions for getting heat from the rooms receiving sunlight to the rest of the house. Providing such storage and delivery of solar heat gained through windows is the basis of passive solar heating systems.

As shown in Figure 2-19 the type of storage used and where it is located with respect to the windows varies for different passive systems. Tall metal or fiberglass tubes can be used to hold water instead of drums. Entire walls of solid concrete or grout-filled masonry store solar heat well. Slab floors can absorb solar heat coming in through windows, skylights, or greenhouse glass.

In each of these systems, the sunlight coming in through the glass must shine directly on the storage. If it does not the storage cannot absorb enough solar heat to provide much warmth for the house. Most passive systems deliver heat to the rest of the house "naturally" - that is, the heat moves by itself without use of pumps or fans. There is some natural regulation of how fast heat moves from the storage into the house - the colder the house gets, the faster the heat is drawn out of the storage. That is how the drum wall works.

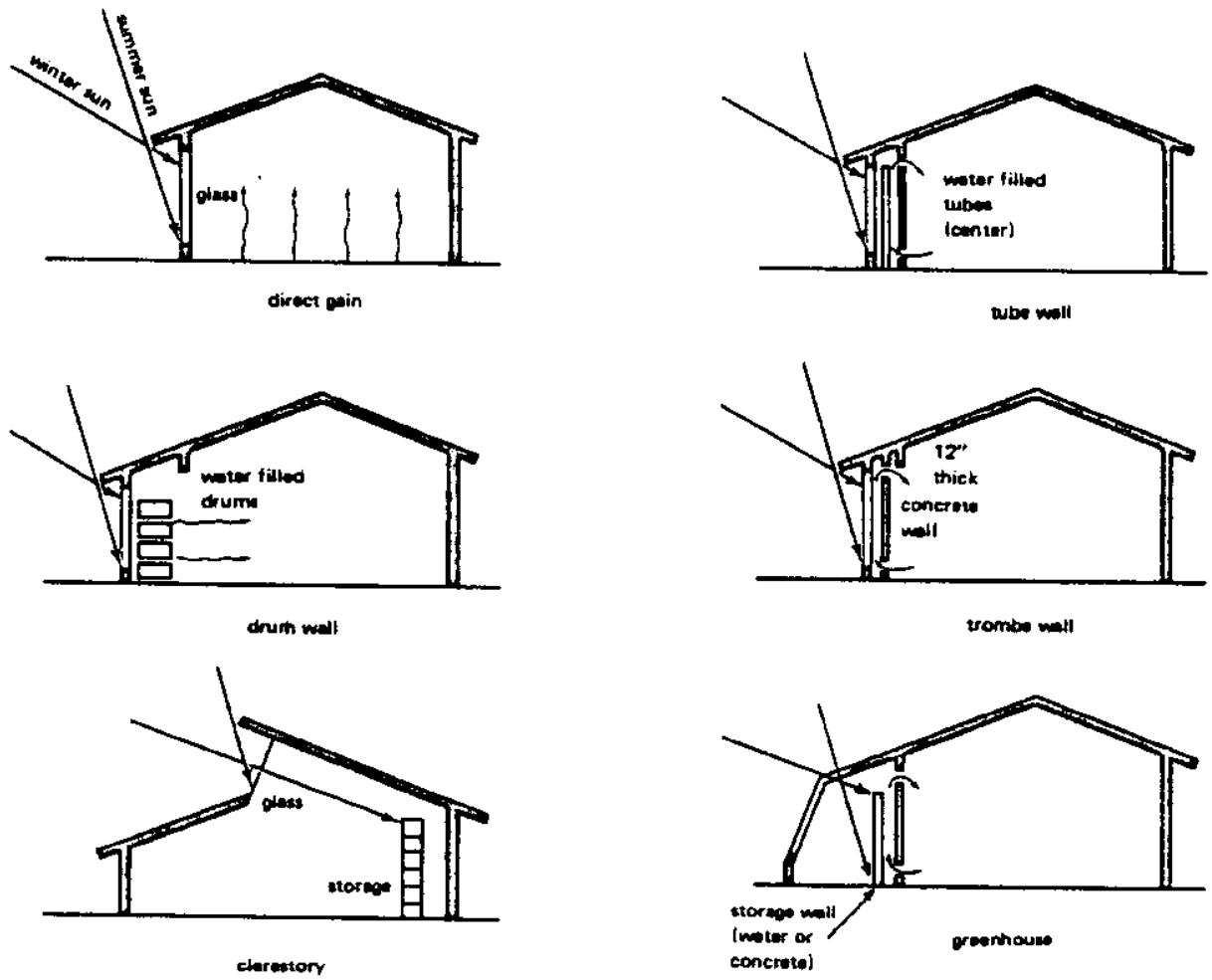

Figure 2-19. Passive solar energy systems.

In other passive systems, solar heat is "trapped" between the glass and storage (in the air space between the glass and a concrete wall, or in an entire greenhouse), and the amount of heat allowed into the house is controlled by opening and closing vents, either manually or automatically.

The performance of passive systems depends not just on how much solar heat they can collect, but also on how much of that heat is lost through the glass at night. The most common solution to the problem of heat loss is to install movable insulation (such as insulating curtains) between the glass and the storage. The curtains or other devices are moved during the day to let the sunshine in, and closed at night to reduce heat loss. Certain conditions must be present to do a simple passive retrofit. Since the basis for passive heating is to "let the sun shine in," the building must have extensive south-facing windows or skylights or places where they can be added. In addition, there must be a place close to the windows where storage can be located. The storage must receive midday sun. The problem here is that drums of water and masonry walls are so heavy that most existing floors can't support them. If the floor is not strong enough, there are at least two possible alternatives. One is to put the water or masonry wall on its own foundation on the exterior of the south wall. Another is the technique of turning a room addition into a solar heater that provides warmth for the rest of the house as well.

As with active solar systems and heat pumps, there are endless variations of the passive technique, limited only by one's imagination. There are systems that use water on the roof (SKYTHERM of Harold Hay) to absorb heat directly, and there are clever ways to insulate glass at night by blowing styrofoam beads between two glass panes (BEADWALL of Steve Baer). Also natural objects such as earth berms to protect from winds and trees which shade in summer and let light pass in winter should be considered. Figures 2-20 through 2-23 show various representations of some of these passive techniques used either by itself or in conjunction with air collectors and thermosyphon systems.

Although passive systems are rather simple in construction and design, their performance analysis is often complicated by a vast interplay of many components. Mazria (1979) is a good source of design information for passive systems. Here are some "rules of thumb" that should be useful for passive designs:

a. South-facing passive storage walls in direct sunlight should have a minimum of 30-lb water storage or 150-lb masonry (concrete) storage per square foot of south vertical glazing. If the storage media is not located in direct sunlight, four times this amount will be needed (Balcomb, undated). Mazria (1979) recommends at least 5-6 gallons water storage (about 45 lb) per square foot of south glass.

b. Shading of south windows should be used to reduce summer and fall overheating. One effective geometry is a roof overhang which will just shade the top of the window at noon (solar time) sun elevation of 45 deg. and will fully shade the window at noon sun elevation of 78 deg. F (Balcomb, undated).

c. The best thickness of a Trombe wall is from 12 to 16 inches. The masonry should have a high density - at least 100 lb/ft^3. Thermocirculation vents can be used to increase daytime heating but will not increase nighttime minimums. Vents should have lightweight passive backdraft dampers or other means of preventing reverse flow at night (Balcomb, undated).

d. Two to three square feet of south-facing double glazing should be used for each Btu/deg. F-hr of additional thermal load (i.e., exclusive of the glazing). This will give 70% to 80% solar heating in northern New Mexico (Los Alamos) for a building kept within the range of 65 deg. F to 75 deg. F. See Balcomb (undated) for example of how to use this method.

e. An easier to use rule in place of (d) is that given by Mazria (Mazria, 1979). For a well-insulated space in 40 deg. N latitude in cold climates (outdoor temperature = 20 deg. F to 30 deg. F) the ratio of south glazing to floor area is in range 0.20 to 0.25 to maintain an average space temperature of 68 deg. F over 24 hours (e.g., a 200 ft^2 floor space needs 40-50 ft^2 of south glazing). In temperate climates (35 deg. F to 45 deg. F outdoor temperature) use ratios in the range 0.11-0.17.*

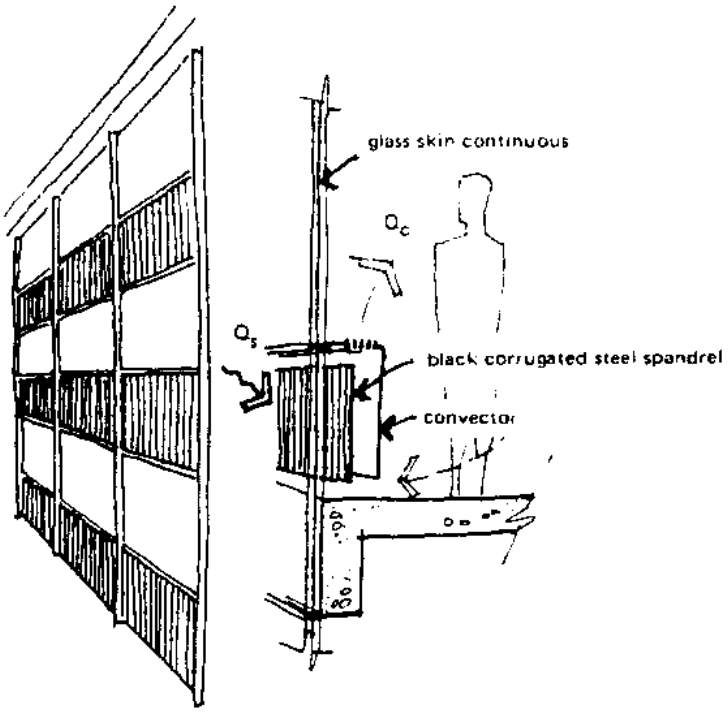

ODEILLO OFFICE (FRANCE)
South wall

New construction - office

passive system

Approach
air collector for buildings
used during day only

Operation
natural (convective)
transfer of solar Q to building Q

Advantages
- Operative during building use period - thus no storage
- Simple, no moving parts
- Effective in ideal climate

Problems
- night operation

Figure 2-20. New-construction (office) passive solar energy system.

Thermosyphon DHW System

wall (vertical) collector close cover each night-avoid drain requirement. Adjust reflector for season.

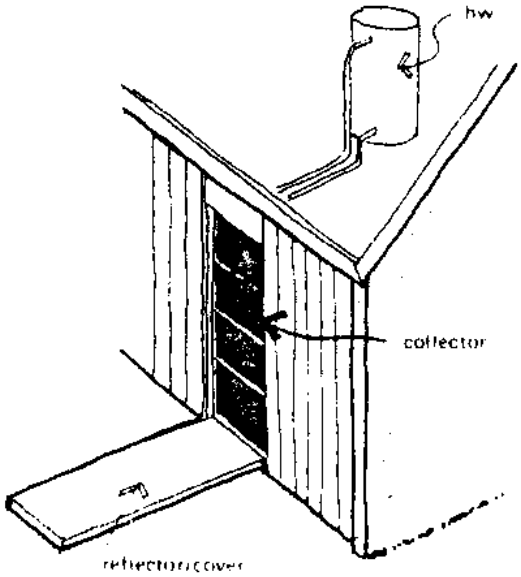

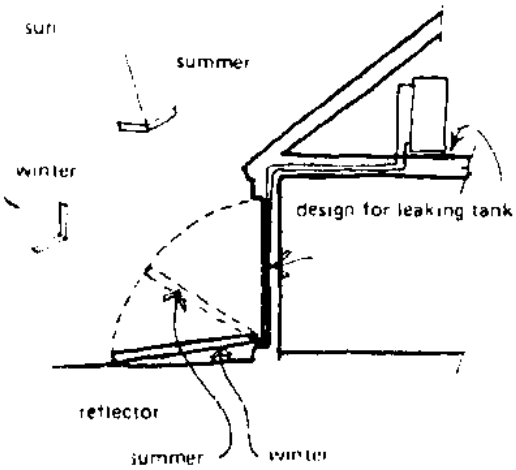

Figure 2-21. Vertical wall solar collector.

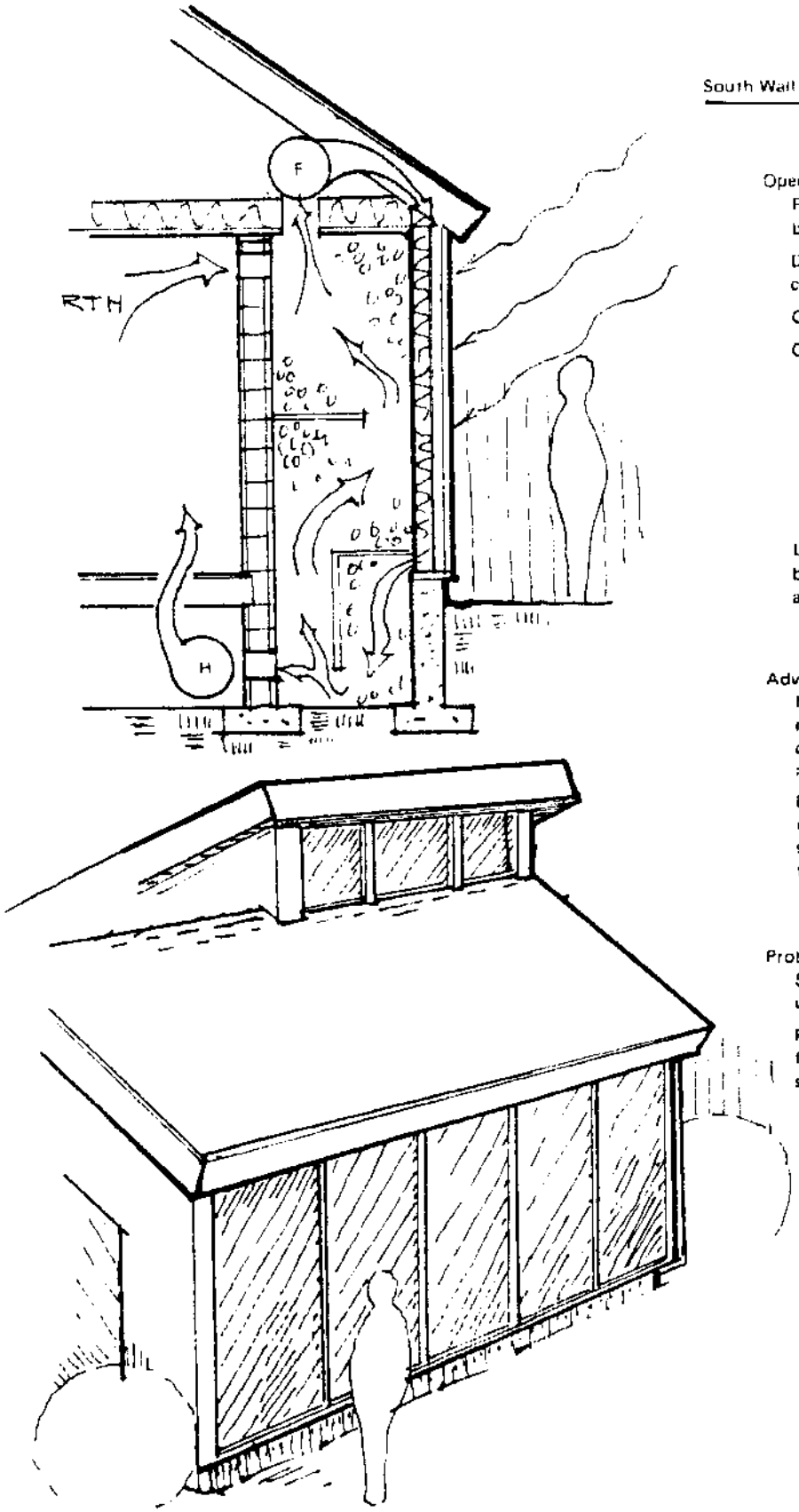

South Wall Collector With Combined Storage

Operation

Rock storage is located directly behind collector

Direct recirculation of air from collector to storage

Collector is vertical

Conventional hot air heater

Takes suction on storage. During normal solar operation, hot air from storage would be blown into house duct distrib. system. When storage temp. is too low, heater will come on to take over heating load.

Limited summer cooling can be obtained by circ. cool night air through rock bed

Advantages

Minimizes heat loss from the air moving between storage and collector by eliminating duct runs

Reduces cost of construction by incorporating both collector and storage as structural elements in the house

Problems

Some loss of efficiency by use of a vertical collector

Potential shading problem from nearby trees or structures

Figure 2-22. South wall solar collector with combined storage.

Retro Fit With Large Rock Storage

Operation

Hot air from collector is circulated through large rock storage under insulating berm.

Room air is circulated in reverse direction through the rock bed to heat air for the house.

Under optimum conditions, large storage may allow 100% solar heat.

Retrofit shown can be applied to the south face of any building. Two story application shown allows maximum room for collector and storage

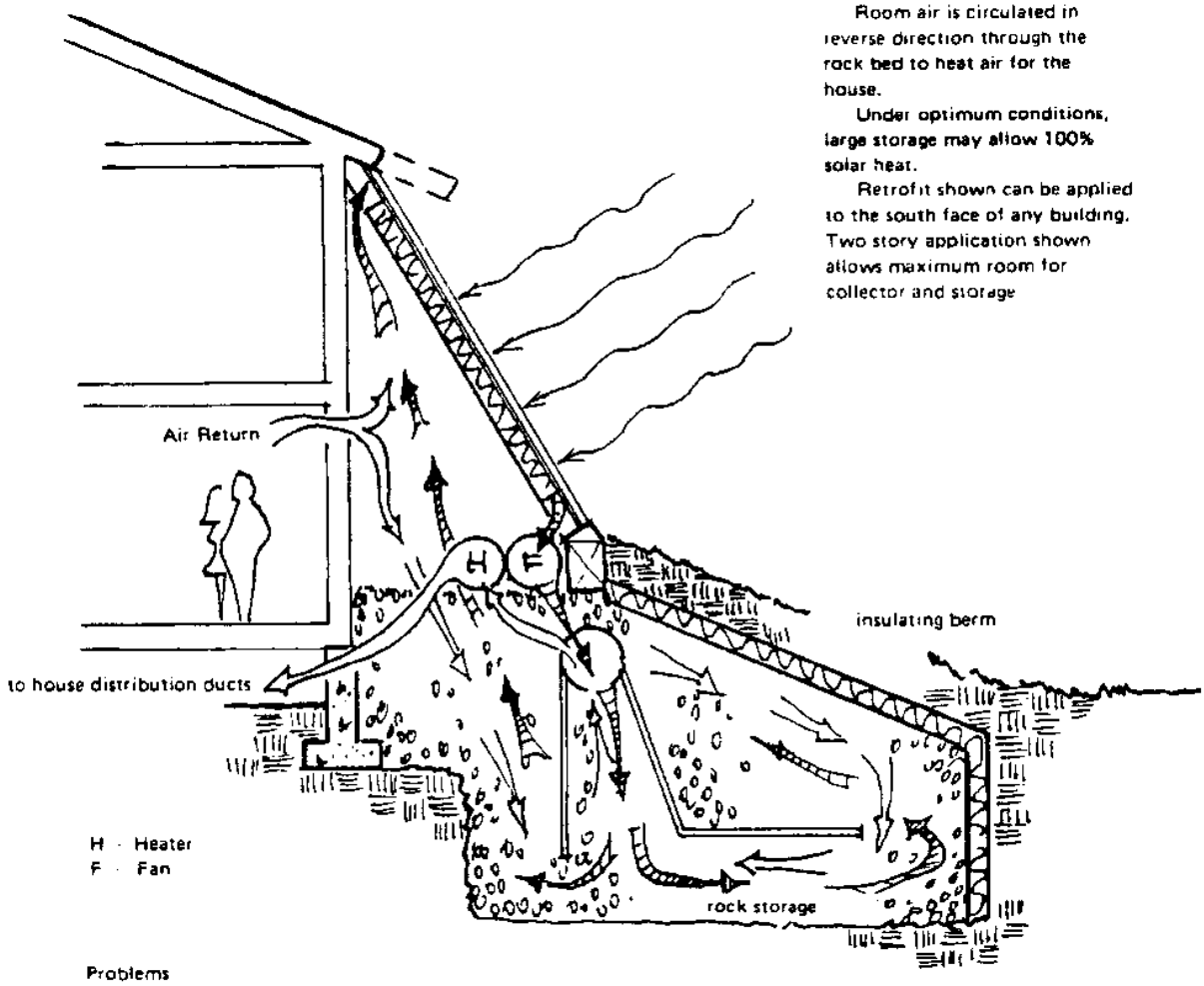

Problems

Solar water heating would require a second heat exchanger at extra expense.

Ground position of collector may be shaded by trees or buildings.

High water table would interfere with storage.

Large amounts of rock may be expensive at some building sites

Advantages

Excavation and backfill over the rock provides a low cost, well insulated containment for storage.

Figure 2-23 Retrofitted large rock bin storage

f. For greenhouses: To determine solar gain: S = 1200 Btu/ft^2 of glazing per clear day, S = 700 Btu/ft^2 per average day. Double glaze only south wall. Insulate all opaque surfaces to R20, outside foundation to frost line to R10, minimize infiltration with caulking. Thermal mass = 5 gal of water or 1-2/3 ft^3 of gravel per square foot of glazing. If storage is thermally isolated from greenhouse, air should be moved at 10 ft^3/min per square foot of glazing through the storage (McCullagh, 1978).

* Rules d. or e. have to be followed by rule a. to estimate the storage required.

2.7 Solar cooling systems. The state-of-the-art of solar cooling has concentrated primarily on the developmental stages of systems in the last few years. Various methods have been researched, and some demonstrated, but only a few systems have been installed for other than research purposes. Solar cooling systems are attractive because cooling is most needed when solar energy is most available. If solar cooling, can be combined with solar heating, the solar system can be more fully utilized and the economic benefits should increase. Solar cooling systems by themselves, however, are usually not economical at present fuel costs. Combining solar heating and cooling systems is not easy because of the different system requirements. This can best be understood by summarizing the different solar cooling techniques.

As with solar heating, the techniques for solar cooling consist of passive systems and active systems. The passive systems use some of the techniques discussed in Section 2.6 and further sources of information are Mazria (1979), Anderson (1976), NCEL (1983), and Bainbridge (1978). For active solar cooling systems the three most promising approaches are the heat actuated absorption machines, the Rankine cycle heat engine, and the desiccant dehumidification systems. A brief summary of these systems is given here and a more detailed explanation can be found in Merriam (1977) or other sources in the literature.

2.7.1 Absorption cooling. Absorption cooling is the most commonly used method of solar cooling. An absorption refrigeration machine is basically a vapor-compression machine that accomplishes cooling by expansion of a liquid refrigerant under reduced pressure and temperature, similar in principle to an ordinary electrically operated vapor-compression air conditioner. Two refrigerant combinations have been used: lithium bromide and water, and ammonia and water. There have been a number of proposed solid material absorption systems also. Figure 2-24 shows a typical lithium bromide (LiBr) absorption cooler. In the absorption cooler, heat is supplied to the generator in which a refrigerant is driven from a strong solution. The refrigerant is cooled in the condenser and allowed to expand through the throttling valve. The cooled, expanded refrigerant receives heat in the evaporator to provide the desired cooling, after which the refrigerant is reabsorbed into the cool, weak solution in the absorber. The pressure of the resulting strong solution is increased by pumping and the solution is available to repeat the process.

The performance of the system is governed largely by the temperature difference between the generator and the condenser and absorber units. Since the generator temperatures in solar driven systems are only moderate, it is important to keep the condensor and absorber temperatures as low as possible.

The LiBr system is preferred over ammonia systems for solar energy applications because of the lower generator temperatures required. Permissible generator temperatures for a water-cooled LiBr system range from 170 deg. F to 210 deg. F (76 deg. C-99 deg. C) compared to the 205 deg. F to 248 deg. F (95 deg. C-120 deg. C) temperatures required for a water-cooled ammonia absorption system. Most, if not all, of the commercially available absorption units use LiBr and water as the absorbent-refrigerant fluid pair. Because the LiBr will crystallize at the higher absorber temperatures associated with air cooling, these units must be water cooled. A prototype ammonia-water unit, amenable to direct air cooling, has been built by Lawrence Berkeley Laboratories.

A number of equipment requirements and limitations must be considered in the analysis and design of solar powered absorption systems. The first consideration involves the type of collector used. The temperatures required by absorption coolers are obtainable with flat plate collectors but at low collection efficiencies. Collection efficiency is improved with an increased number of glazings and with a selective surface, therefore, it may be cost effective to improve the collector rather than to simply oversize.

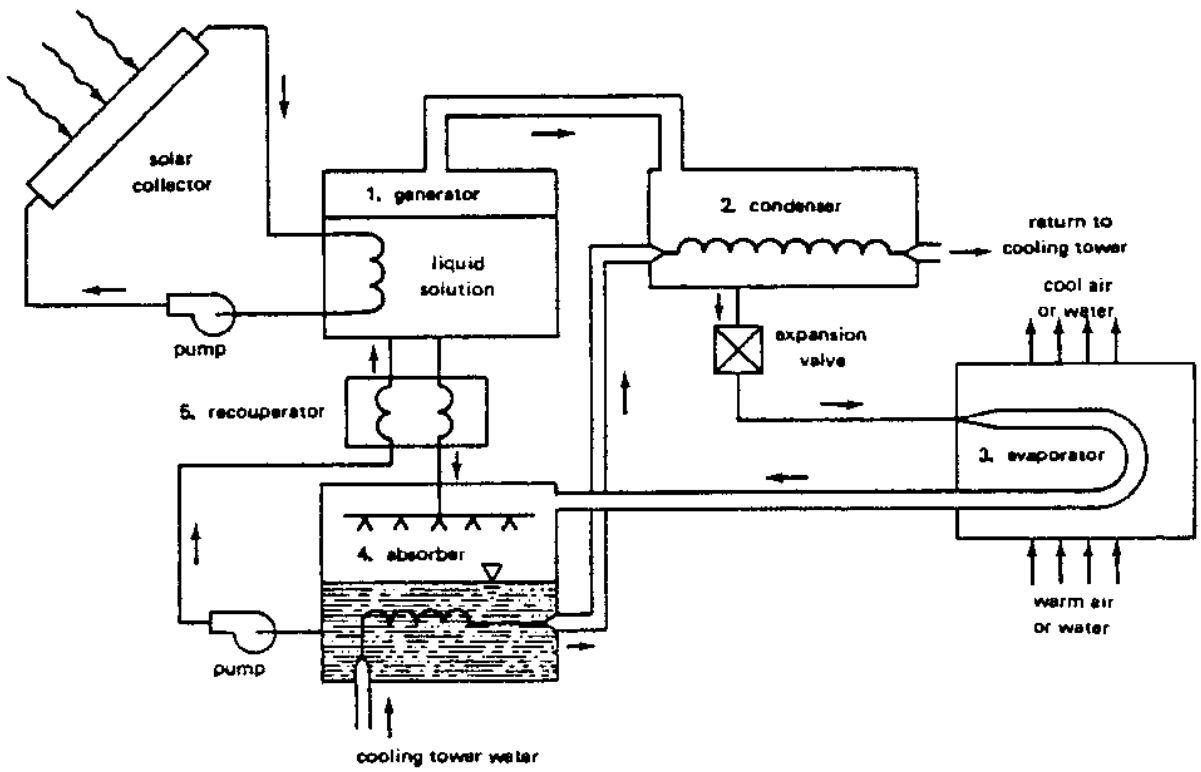

Figure 2-24. Schematic of lithium bromide absorption cooler.

Concentrating or evacuated tube collectors are usually used in these applications. If concentrating collectors are used (see Section 2.1.10.2), the associated higher costs and potentially increased maintenance for the tracking mechanism must be considered. In general, concentrating collectors operate at higher efficiency at these higher temperatures. However, the higher temperatures are usually not required to operate the space heating system. Therefore, the relative importance of the two thermal loads must be considered when selecting a system.

The second consideration involves the means of delivery of the heated fluid to the absorption cooler. Since, in many climates, the cooling load is simultaneous with and often proportional to the solar insolation, it may be desirable to allow the heated collector fluid to bypass the storage unit. Other climates may require a hot storage unit but one of considerably smaller size than the one used for heating purposes. The important requirement is that high temperatures be available during periods of heavy cooling load.

A third consideration deals with the problem of reduced efficiency of the absorption cooler under start up and transient conditions. Typical absorption coolers do not reach operating efficiency until after an hour or more of operation time. A machine which is cycled on and off regularly will have a drastically reduced average coefficient of performance when compared to a machine in steady state performance. This problem has been overcome in at least one installation by the use of a cold storage unit (Beckman, 1977). The cold storage unit permits continuous operation of the absorption cooler and thus allows some reduction in the system and cooler size.

A fourth consideration is the need for some means of cooling the absorber and the condenser. A cooling tower or some other low temperature cooling system must be used to obtain reasonable performance. All of the commercially available units require a cooling tower which is another maintenance item. Current research is underway to develop units that do not have a separate cooling tower.

2.7.2 Rankine cycle heat engine cooling. Rankine cooling systems are still in development with only a few in operation (Anderson 1979; Barber 1975).

In these systems the shaft power produced by a heat engine drives the compressor in a conventional vapor compression-type cooling machine. The thermal energy input to the heat engine can be from a solar collector or from a solar collector and a fossil fuel combustor. The fossil fuel can supplement solar energy, or it can be used alone as the auxiliary energy supply when no solar energy is available. Alternatively, electricity can be used as the auxiliary energy supply by coupling an electric motor directly to the compressor shaft. Another option is a motor-generator using a heat engine for generating electricity when solar energy is available and there is little or no cooling load.

From state-of-the-art considerations, two types of fluid heat engines are primarily feasible in solar cooling units. In one type of engine, the working fluid cyclically changes phase from liquid to gas and back to liquid. The most widely used engine of this type operates on the Rankine cycle.

In the other type, the working fluid remains in the gaseous state. These engines operate on various cycles, including the Stirling and Brayton cycles. For relatively low thermal energy input temperatures (less than 400 deg. F), Rankine cycle engines are superior in performance to gas cycle engines. At higher temperatures, gas cycle engines equal or better the performance of Rankine cycle engines.

Relatively low temperatures are attainable with state-of-the-art thermal solar collectors, so the heat engine-vapor compression development projects involve Rankine cycle engines.

In a Rankine cycle engine, fluid in the liquid state is pumped into a boiler where it is evaporated and possibly superheated by thermal energy. The vapor generated in the boiler is then expanded through a device such as a turbine, a piston-cylinder (reciprocating) expander, or a rotary vane expander. The expansion process lowers the temperature and pressure of the vapor, and effects a conversion of thermal energy into shaft work. The fluid leaves the expander either in the vapor phase or as a liquid-vapor mixture and flows into a condenser, where it returns to the liquid phase by giving the energy of condensation to cooling water or ambient air. This liquid is then pumped into the boiler, and the cycle is repeated.

In some systems under development, the same working fluid is used in both the Rankine engine and the vapor compression chiller, which permits the use of common condenser and the elimination of special seals to maintain fluid separation in the expander-compressor unit (Scholten and Curran, 1979).

These systems have areas that need development in matching the solar heat engine with the mechanical compressor units of the cooling equipment. Since most compressors are designed for certain speed and torque inputs, the varying operation of a solar heat engine will probably reduce the overall COP of the unit. Also the solar heat engine is at high efficiency at high storage tank temperatures whereas the solar collectors are at low efficiency which will also affect the COP of the system. These systems are designed for large cooling load applications.

2.7.3 Desiccant cooling (Scholten and Curran, 1979). The Rankine engine-vapor compression and the absorption cooling units operate on the basis of closed cycles-fixed amounts of working fluid are circulated within sealed equipment; the working fluids do not come in contact with the building air. Desiccant cooling systems, on the other hand, may be designed for open-cycle operation, since the only circulating fluids involved are air and water. The basic concept is to dehumidify air with a desiccant, evaporatively cool the dehumidified air, and regenerate the desiccant with solar-derived thermal energy.

Two basic open-cycle arrangements are feasible: the ventilation mode and the recirculation mode. In the ventilation mode, fresh air is continually introduced into the conditioned space. In the recirculation mode, exhaust air from the conditioned space is reconditioned and returned to the space. Figure 2-25 illustrates a ventilation system in which a solid desiccant material mounted on a slowly rotating wheel provides the basis for obtaining a cooling effect.

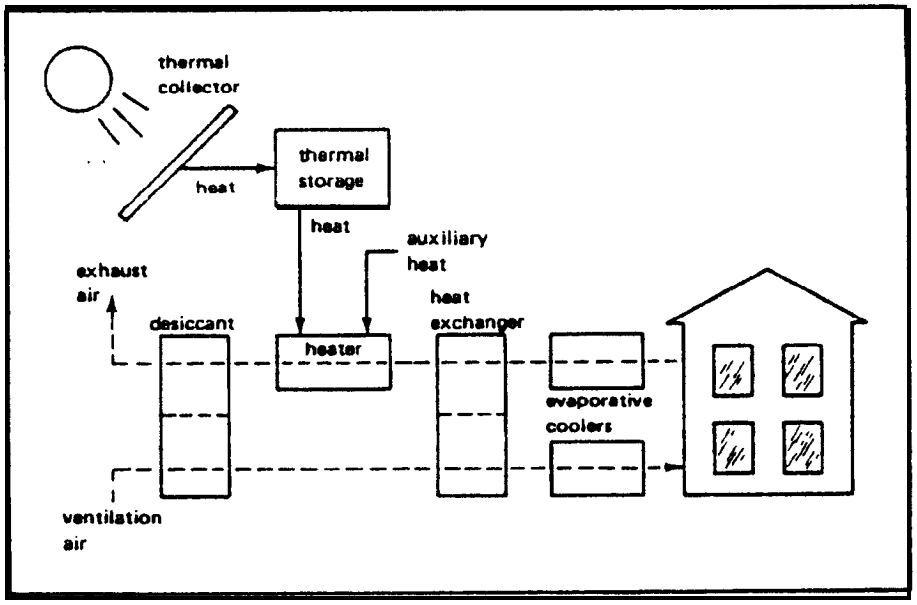

Figure 2-25. Schematic of solar desiccant cooling.

The hot desiccant material absorbs moisture from incoming ventilation air and increases the dry-bulb temperature. This dry air stream is cooled in two steps. First, it is sensibly cooled by heat exchange with the building exhaust air. Then it is evaporatively cooled and partially rehumidified by contact with a water spray. The exhaust air from the building is evaporatively cooled to improve the performance of the heat exchanger. After being heated by heat exchange with the incoming air, the exhaust air is further heated by energy from the solar system and/or from an auxiliary energy source. The hot exhaust air passes through the desiccant material and desorbs moisture from it, thereby regenerating it for continuation of the process.

Desiccant systems have faced problems of high parasitic power and large space requirements relative to capacity. Because of their bulkiness, the systems may have primary application in the low capacity range (i.e., residential systems) if and when ways can be found to reduce parasitic power requirements to acceptable levels.

The Institute of Gas Technology (IGT) has been investigating design modifications in a prototype 3-ton system. AiResearch is developing a 1-l/2-ton desiccant cooling system around a radial flow design. Illinois Institute of Technology is developing a dehumidifier of a cross-flow design that will provide more compact and efficient operation than previous designs. Zeopower is developing a unique closed cycle desiccant system in which the desiccant is integral with the collector.

2.7.4 Other cooling methods. Other methods, using solar heating equipment but not direct solar energy, should also be considered. These methods chill the thermal storage unit of the system during the night and use the chilled medium to provide the daily cooling load. Methods of chilling the storage include radiation of the heat to the night sky and heat exchange with the night air cooled or uncooled by auxiliary means. The chilled storage is used directly, via heat exchange with the building air. Both rockbed and water storage are suitable since the only additional hardware required is that to route the fluid. A heat pump can be used during the day to cool the building and reject heat to the thermal storage unit. The thermal storage is then cooled by using the solar collectors for night sky radiation. From experimentation in Arizona, Bliss obtained a nightly heat rejection quantity of 360 Btu/night/ft^2 for a black cloth radiator. Analytical estimates can be obtained using an effective clear sky temperature of 25 deg. F (14 deg. C) lower than the ambient air temperature. The advantage of this system is that the same equipment (collectors and heat pump) can also be used for heating (Section 2.5.3). In systems with dual storage units, the heat pump transfers heat from one to the other - cooling the first and warming the second. The cool fluid in the first unit is circulated to the house while the concentrated heat in the second is discharged to the outdoors.

An evaporative cooler can be used coupled with a rockbed storage unit. Night air is evaporatively cooled and circulated through the rockbed to cool down the pebbles in the storage unit. During the day, warm air from the building can be cooled by passing it through the cool pebble bed. This method is not very effective in humid geographical areas.

The storage volume can also be cooled using a small refrigeration compressor. Most through-the-wall air conditioners use such compressors to cool the indoor air. This unit acts as the backup or auxiliary cooling system - analogous to the backup heating system. If operated only at night, its capacity can be as small as half that of an independently functioning unit and still meet peak cooling demands. Nighttime operation will be particularly wise if electric companies charge more for electricity during times of peak loads on hot summer afternoons. An even smaller compressor can be used if it operates continuously night and day - cooling the storage when not needed by the house (Anderson, 1976).

2.7 5 Estimating system size. The sizing of cooling system components is dependent on hardware, climate, and economic constraints. The cooling unit must be sized so as to provide the maximum cooling load under conceivable adverse conditions of high humidity and low or erratic solar insolation.

The collection area required is dependent on the fraction of the cooling load to be provided by solar. Very large collector areas may be required for 100% solar cooling under adverse conditions of high humidity and low insolation. Although a detailed calculation method, as provided in the worksheets in the following sections for heating systems, is not available for solar cooling, an estimate of the required collector area can be made by the equation:

$$A = \frac{\text{Cooling load/COP}}{I_{\lceil T \rceil}\ [\text{eta}]\text{collect}\ [\text{eta}]\text{delivery}}$$

where: Cooling load = the portion of the total cooling load provided by solar calculated using ASHRAE techniques or others.

COP = Coefficient of Performance of the cooling unit. COP is the ratio of heat energy removed to energy supplied from external sources. Manufacturing data is recommended for determining COP (3413 Btu = 1 kWh).

$I_{\lceil T \rceil}$ = average instantaneous solar insolation on collector surface (i.e., at tilt angle).

[eta]collect = average collector efficiency under design conditions.

[eta]delivery = delivery efficiency which takes into account heat exchanger efficiency and thermal losses.

In general, the collector area required to provide the majority of the cooling load is larger than the collector area of typically sized heating only systems. Collector areas for heat engine systems are larger than the areas for absorption cooling systems due to the thermal efficiency of the heat engine, which should be included in the preceding equation (Swindler, 1979).

2.8 System controls. System controls are used to turn on a circulating pump or blower to the collector only when the sun is providing heat. Differential thermostats are commercially available (typically $50 to $150) to turn on the collector pump only when the collector plate temperature is a preset number (usually 20 deg. F) hotter than the storage tank bottom temperature. A typical control strategy is shown in Figure 2-26 (Rho-Sigma, undated) and the hookup in Figure 2-27.

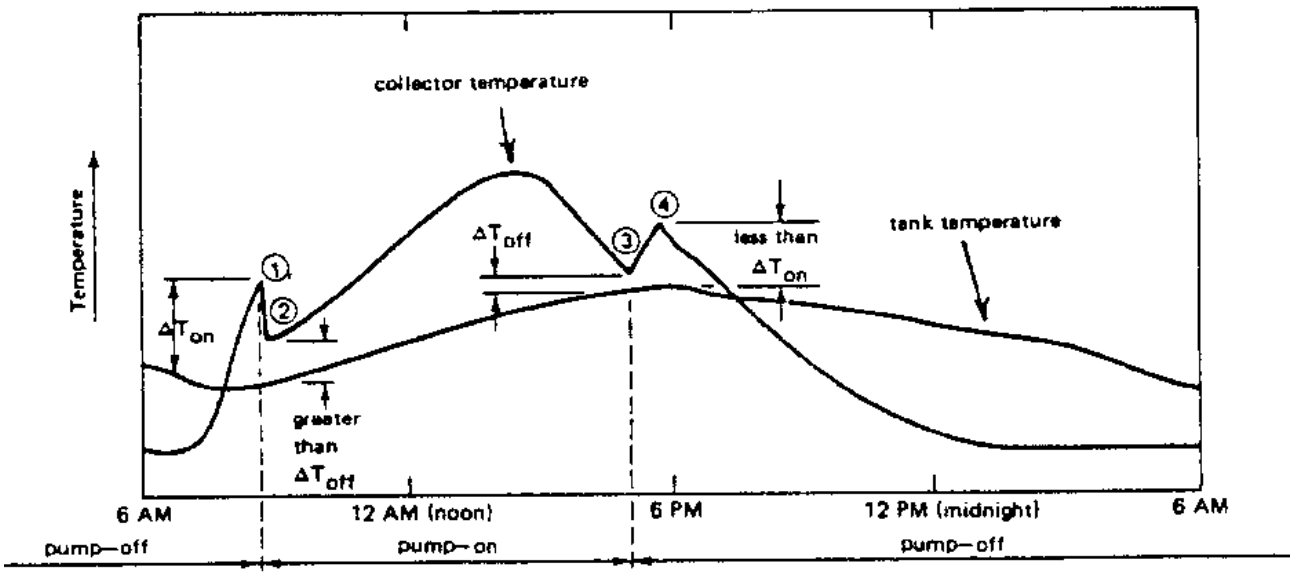

Figure 2-26. Control system strategy.

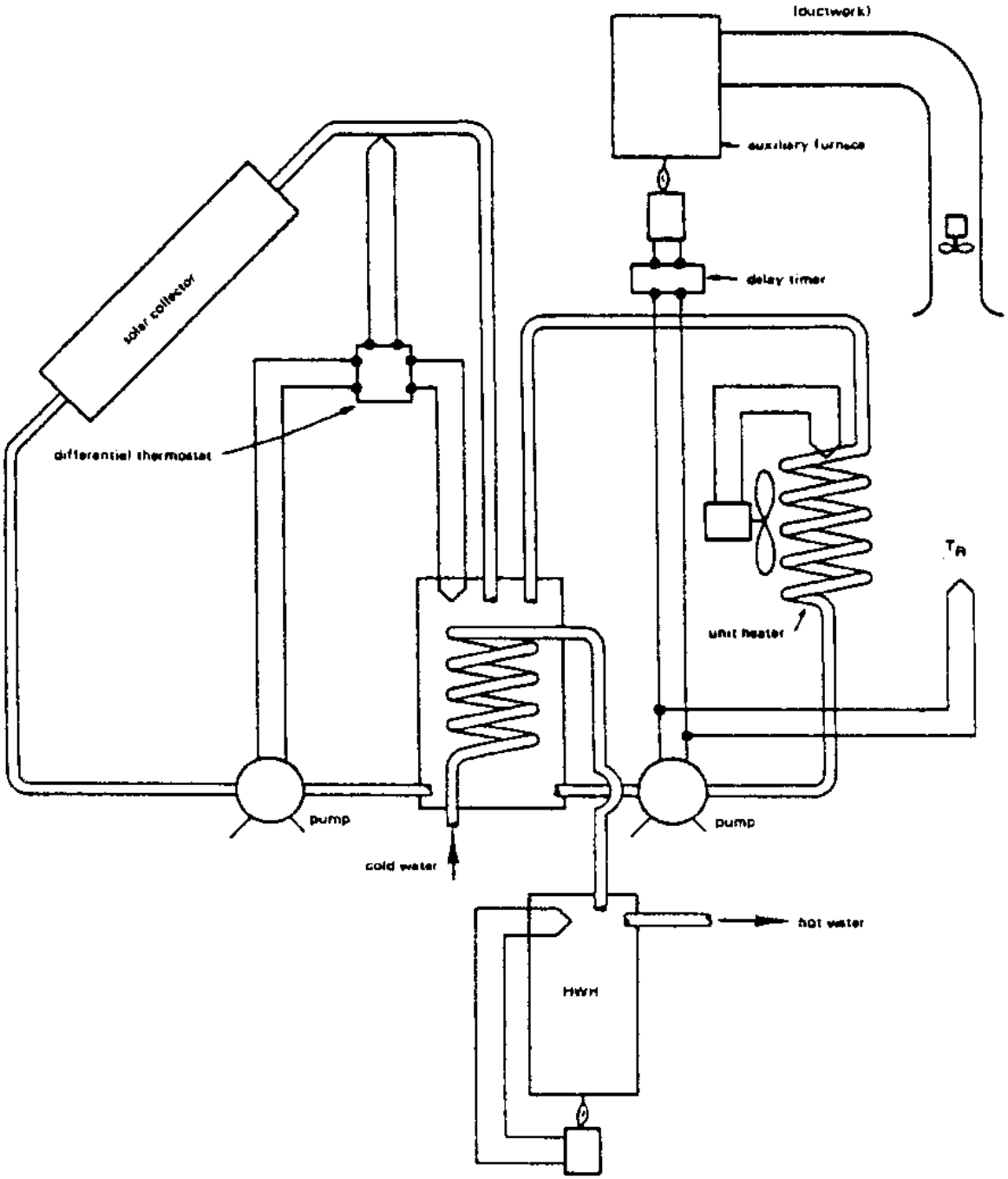

Figure 2-27. Control system for space and DHW heating.

Differential thermostats are available with high temperature protection and low temperature (freeze) protection. High temperature protection is important, especially in evacuated tube collectors, in that it prevents a very "hot" collector from suddenly receiving a supply of cold water thus producing a thermal shock that could damage the collector components. Another type of control called proportional control is available. It is similar to the ON/OFF differential controller in operation. The difference is that the proportional controller changes the threshold ON and OFF points and controls the flow such that less than full flow can be achieved if the sun is at less than full intensity. The advantage is that the proportional control can "turn on" the system when the other controller (the ON/OFF type) is waiting for more sun to become available. This is an advantage on cloudy days and early morning start ups. Overall system efficiency is increased slightly with the proportional control. These controls are more expensive and one such experiment at NCEL has shown that proportional controls result in considerably more cycling of the pump motor which could shorten pump life. It is recommended that the control manufacturer be consulted on this point before a proportional control is used.

As the building requires heat, other controls must direct pumps or blowers to provide heat from the storage tank to the load. This control is the conventional thermostat. The same room thermostat may control the auxiliary heater; however, a delay timer or a two-step room thermostat must be incorporated into the auxiliary heater control circuit so that the auxiliary heat will not come on if heat is available from storage. Ten minutes has been suggested as a typical time delay before auxiliary heat comes on. Some manufacturers supply combination thermostat and solar system controls.

2.9 Piping, pumps, valves.

2.9.1 Pipe and header sizing. Piping should be designed for low pressure drop. All exposed piping should be well insulated with approved weather-resistant insulation. Dielectric unions should be used at connections between dissimilar metals. Rubber or silicone hose used for connections must be of a high temperature type. The pipe ends should have ferrules to provide a good seal with the hose. In low pressure systems, spring type clamps are preferred because they compensate for thermal expansion. Copper pipe is preferred to galvanized steel due to its longer life expectancy and relative ease of installation. Thermal expansion should be provided for all piping or hard tubing. Pipe sizing should be in accordance with recognized methods, but for most installations the following estimates are reasonable:

a. For a single row of parallel collectors (see Figure 2-6) with "X" number of branches, 0.5 gpm flow per collector, water or 50% glycol as heat transfer fluid.

Up to 3 collectors	- 1/2-inch headers
4 to 7 collectors	- 3/4-inch headers
8 to 12 collectors	- 1-inch headers
13 to 18 collectors	- 1-1/4-inch headers
More than 19 collectors	- 1-1/2-inch or larger (size for each design)

b. Same as above except collectors in a double row series-parallel arrangement (see Figure 2-6).

Up to 5 collector branches	- 1/2-inch headers
6 to 10 collector branches	- 3/4-inch headers
11 to 15 collector branches	- 1-inch headers
16 to 22 collector branches	- 1-1/4-inch headers
More than 23 collectors	- 1-1/2-inch or larger (size for each design)

2.9.2 Pumps and collector flowrate. Pumps are sized in accordance with recognized practices also. Since solar systems are nothing more than a combination of pipes, valves, and fittings it is possible to do a heat loss calculation to determine the system head. Charts are available in standard fluid flow handbooks that give the friction losses or "equivalent length of feet in pipe" for various fittings and valves. These are merely summed for the entire system.

The flowrate through the collector loop is determined by the maximum amount of energy which must be removed from the collector. This maximum is about 225 Btu/ft^2/hr. Often a manufacturer will specify the flowrate through his collector and this value should be used. If not, an estimate can be made by determining the flowrate necessary to remove the maximum amount of energy while minimizing the collector inlet temperature (to maintain high collector efficiency). The rule of thumb for this calculation is 0.015 to 0.020 gpm for each square foot of collector area for water. For other fluids this can be scaled by the value of the specific heat of the fluid as compared to water (C_p = 1 Btu/lbm-deg. F).

Now that head loss and flowrate are determined, a pump can be selected by using the manufacturers' standard tables and graphs. For typical domestic hot water systems and space heating systems for a house for a family of four, the pumps are quite small, averaging 1/12 to 1/20 hp and costing about $125 each. In some systems, like a drain down system, pump sizes can be much larger due to the higher vertical "head" requirements.

If the water in the system is open to the atmosphere or if the water is to be used for drinking the pump should be made of bronze or stainless steel on all water-wetted surfaces to minimize corrosion. Pumps will have longer life if they are placed in low temperature parts of the water circuits. Pumps can be "staged" to give more flow or head. Two pumps in series will give the same flow against twice the head. Two pumps in parallel will give twice the flow at the same head. Two or more small circulator-type pumps are often cheaper than a single larger pump.

2.9.3 Valves. Valves, other than seasonal or emergency shut-off valves, should be electrically operated and located out of the weather or well protected. A vent must be provided at the high point in liquid systems to eliminate entrapped air and it should also serve as a vacuum breaker to allow draining of the system. To avoid multiple venting, systems should be piped to

avoid having more than one high point. Pressure relief must be provided at some point in each flow circuit. Check valves can be added to prevent thermally induced gravity circulation. A flow-check valve (used in the hydronic heating industry) will also accomplish the same purpose. Mixing valves should be used to protect DHW systems from delivering water hotter than specified (usually 120 deg. - 140 deg. F). Consideration should be given to energy conservation by lowering DHW temperature whenever possible. Often 105 deg.-115 deg. F will suffice if water is used only for showers and washing hands.

2.10 Other considerations.

2.10.1 Architectural. Solar collector arrangements should be studied to facilitate blending collector panels into the architecture of new or existing buildings. Shade trees must be so located as not to cast shadows on the collector. Other structures such as chimneys which can cast shadows should be carefully located to avoid shading of the collector. Experience of Florida installers indicates that if collectors are placed directly on the roof, the life of asphalt shingles under the collector may be reduced by up to 50%. This suggests that a small space should be left between the collector and the roof, or the collector should be built into the roof. In the latter case, the design must provide for simple glass replacement. A space between collector and roof allows for snow to fall through rather than accumulate. Collector mounting details, roof penetrations, flashing details, pipe supports, thermal expansion provisions, etc., are best explained in DM-3, the DOE Design Practice Manual (ref), NRCA Roofing Manual (ref), or NBS Tech Note 1134 (ref).

2.10.2 Reduction of heat losses. Reduction of heat losses is usually one of the most important steps in the design of a solar space heating system. It almost always costs less to super-insulate a building to reduce losses than to provide additional solar collector area to provide the extra heat. Installing 12 or more inches of insulation in the attic, insulating existing walls by injecting nonflammable foam (one manufacturer claims 30% reduction in total heat loss at cost $1.00/ft^2 floor area), multiple glazing, and weatherstripping should all be evaluated for cost effectiveness versus a larger solar system. NAVFAC policy currently does not permit the use of injected foam of urethane formaldehyde. If the solar-augmented system is found to be cost competitive with a conventional system on a life cycle cost basis, then the cost effective amount of insulation will be the same for both the solar and conventional systems. Thus the solar system should not be charged for the cost of insulating the house.

2.10.3 Maintenance and accessibility. Systems should be designed for minimum maintenance. Maintenance of glass will be minimized if vandalism can be reduced. Collectors of flat-roofed buildings may be shielded from the ground by a skirt around the roof perimeter. Locating the collector in the backyard area of residences rather than on a street-facing roof reduces probability of vandalism. Double strength glass for top surface can be used in hail areas, and also provides protection from small stones. Still more protection is offered by a screen of 0.5-inch mesh stretched several inches above the collectors, but with some loss in collector efficiency (15%).

Generally mesh screens are not recommended. Collectors and mounts must withstand expected wind and snow loads. Collector design should allow for rapid replacement of glass covers. Pumps, pipes, and controls should be reasonably accessible to allow repair or replacement. Water pumps should be located so that leakage does not cause serious damage.

As of the date of this report, the Navy has installed solar heating systems at many of its bases including family housing units, BEQ's, cafeterias, and miscellaneous buildings. As solar designs move from theory to practice, a knowledge of reliability, durability, and maintainability is desired to achieve maximum system performance. To achieve this information NCEL has initiated an on-site evaluation of solar systems installed at these bases. These evaluations have resulted in a compilation of "lessons learned" which in turn has resulted in suggestions as to how to do a preventative maintenance program to avoid these common problems. The list of "lessons learned" can be used as a pre-design checklist as well as a guide for a preventative maintenance program. After the program is complete details may be included in this handbook or perhaps as a separate document. Preliminary information is available from the reference section (Durlak, 1983).

2.10.4 Contract submittals required. In soliciting a bid from a proposed contractor, the worksheets in the following sections will provide the necessary information to evaluate each proposal. It is urged that there be close coordination between the different design disciplines at all stages of design and preparation of construction drawings. Whether or not these worksheets are used, the following list provides the information that should be obtained from any proposed contractor:

a. Introduction (briefly state scope, project description, references, method used, etc.).

b. Study summary (much of this information would be contained on completed worksheet A).

(1) FY Year, P-Number and project location.
(2) Type of solar system (domestic hot water, space heating, space cooling).
(3) Type and area of collectors.
(4) Estimate solar system installed costs (exclusive of SIOH and contingency).
(5) Average annual energy savings and fuel used.
(6) Average energy savings in barrels of oil equivalent (BOE).
(7) Percent energy contribution from solar systems.
(8) Savings/investment ratios.
(9) Solar system design cost (study and design costs separate).
(10) DEIS fuel costs that are used in study.
(11 Description of freeze and high temperature and pressure protection.
(12) Description of control sequence.
(13) Initial year O&M costs and requirements.

c. Other applicable documents:

(1) Collector test results per ASHRAE 93-77.
(2) Schematic of system layout.
(3) Description of operating sequence.

How to start up system.
How to shut off system.
Normal position of valves, controls, etc.
Typical temperatures to expect at key locations.

(4) Maintenance manual (O&M requirements).
(5) Calculations used (if not this document).

Input data.
Analysis.
Method used.

3.0 DESIGN METHODS.

There are three steps in the design of a solar system: determination of solar energy available per unit area of collector, determination of heating load, and sizing the collector for cost effectiveness. A series of worksheets (Section 3.13) has been prepared to facilitate the design process for liquid systems; see Section 3.22 for air systems. The worksheets should be duplicated as needed. The design method presented here is based substantially on the systems analysis done at the University of Wisconsin, Madison (Beckman, Klein, and Duffie, 1977; Klein, Beckman, and Duffie, 1976). The complex interaction between the components of a solar heating system has been reduced by means of computer simulation to a single parametric chart of $F_I A_C$ versus $F_L A_C$ with f as parameter (Figure 3-1), where F_I is a function of energy absorbed by the solar collector divided by building heating load, A_C is collector area, F_L is a function of solar collector heat losses divided by building heating load, and f is the fraction of building heating load supplied by solar heating. The requirement for advance knowledge of system temperatures has been eliminated by use of these heat balance ratios.

The method has been checked with computer simulations for the climates of Madison, Wisconsin; Blue Hill, Massachusetts; Charleston, South Carolina; Albuquerque, New Mexico; and Boulder, Colorado. The standard errors of the differences _ between the computer simulated and the values estimated by this _ method of f for the five locations were no greater than 0.014 (1.4% error); f is the yearly average of the monthly f. Eight years of data were used for the Madison, Wisconsin, case. This method then appears to be sufficiently accurate for most applications and is a method widely used in the industry. It is the basis for an interactive computer program FCHART (Durlak, 1979b), hand calculator programs (Durlak, 1979b), and HUD reports (U.S. Dept HUD, 1977).

3.1 Job summary - Worksheet A. Worksheet A is a summary sheet that shows the effect of collector size on savings-investment ratio (SIR). This is the final desired answer to the question of the design process: What size collector (and total system) gives greatest payback? If all SIRs are less than 1.0, then a solar system is not economical for the application at the conditions used in the design. The number of collector areas (or SIR's) that need be evaluated will vary with each job. Maximum accuracy will be obtained by calculating enough points to plot an optimization curve of collector area versus SIR. The most cost effective choice will then be apparent. A period of 25 years' fuel saving is used in calculations per NAVFAC P-442 as lifetime for utilities. Solar systems can be designed to last this long. Three methods are shown in Section 3.7. Computations completed on subsequent worksheets will be transferred to Worksheet A. Note that only the portion of conventional heating systems cost in excess of that normally required should be included in solar systems cost analysis. However, for budgetary purposes in new construction, then, the total solar system cost is the sum of the excess cost plus the previously excluded conventional system cost.

3.2 Solar collector Parameters - Worksheet B. The purpose of Worksheet B is to gather the variables needed to calculate F_I and F_L (see paragraph 3.0). The first two parameters, F_R([tau][alpha])$_n$ and $F_R U_L$ represent the y intercept and slope, respectively, of the [eta] versus [delta]T/I curve, Figure 2-7, applicable to the chosen collector. F_R is collector heat removal factor,

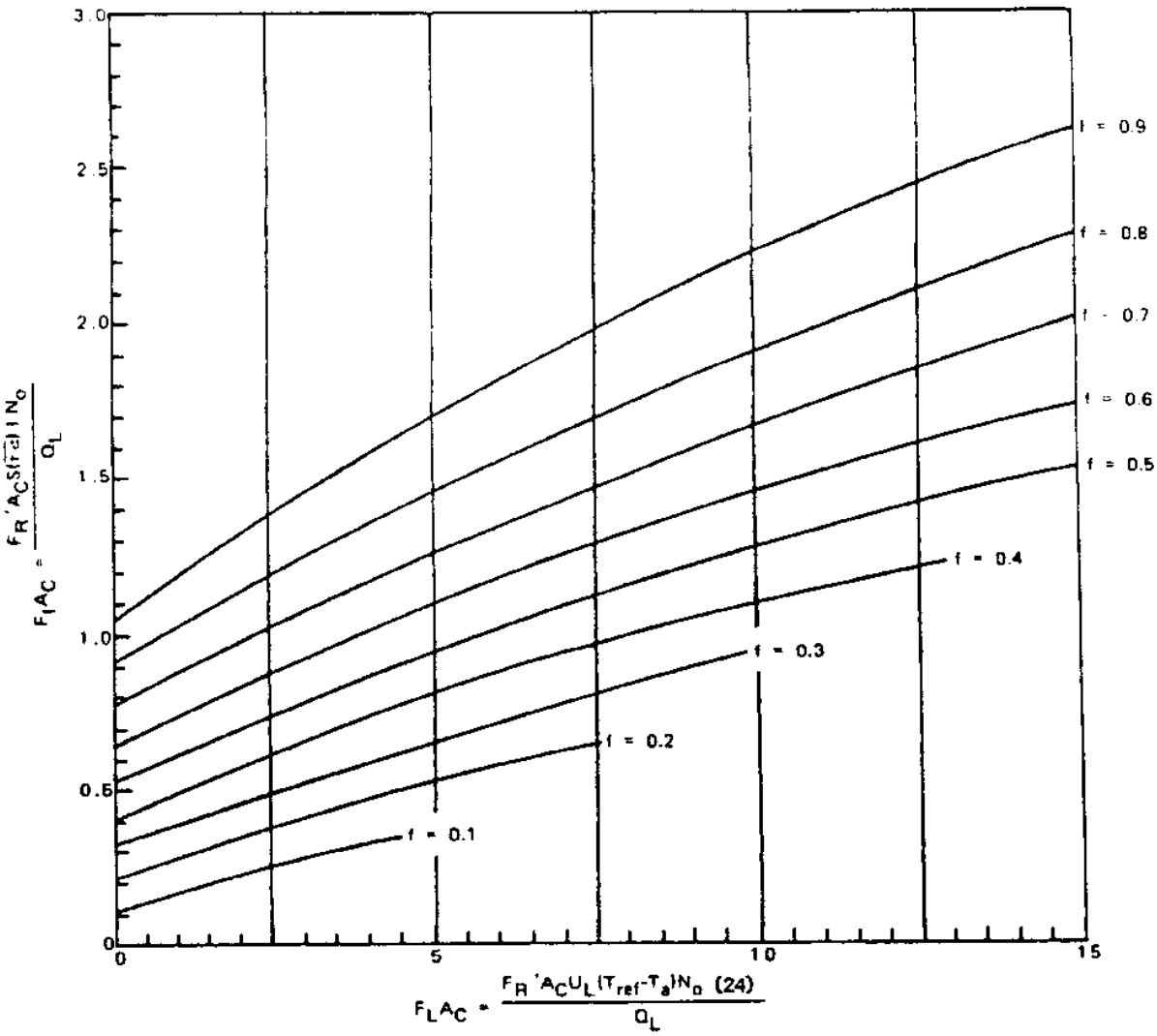

Figure 3-1. Fraction of space heating/DHW load supplied by solar energy (Beckman, Klein, and Duffie, 1977).

[tau] is transmissivity of cover glazes, [alpha] is absorptivity of collector plate, U_{L} is overall collector heat loss coefficient. The y intercept (F_{R}([tau][alpha]$_{n}$) and the slope ($F_{R}U_{L}$) can be read directly from Table 2-6 for a wide variety of collectors. The negative sign of the slope is ignored and the absolute value used. The y intercept is called efficiency intercept in Table 2-6. If a particular collector is not listed in Table 2-6, choose one with similar physical construction and use its value of slope and intercept. If necessary, slope and intercept can be calculated for a collector shown in Duffie and Beckman (1974), but this is not recommended. If a manufacturer's brochure is used for obtaining test data, the slope will be a constant if the [eta] versus [delta]T/I curve is a straight line; however, if it is not a straight line, the slope to be used is the tangent to the curve in the expected range of [delta]T/I. The units of $F_{R}U_{L}$ must be Btu/hr-ft^{2} deg. F for use on subsequent worksheets.

The term $(mC_{p})_{c}/A_{c}$ is the unit . heat capacity flowrate of working fluid through the collector, where m is flow of working fluid through the collector in lbm/hr, and C_{p} is specific heat of fluid in Btu/lbm deg. F. The larger the flowrate, the lower will be the [delta]T through collector and thus the higher . will be the collector efficiency. A practical limit is reached at $(mC_{p})_{c}/A_{c}$ = 10 Btu/hr-ft^{2} deg. F, so the design procedure is based on values of this order of magnitude. The latter figure may be taken as constant in calculating subsequent parameters.

The value for [epsilon]$_{c}$, effectiveness of the collector - tank heat exchanger, is based on manufacturer's data for the conditions of flow through the heat exchanger. If no heat exchanger is employed between the collector and the tank, then this term equals 1.0. For most heat exchangers, the effectiveness will vary from about 0.5 to 0.8 This is a relatively complex term to calculate and a procedure is given in U.S. Dept HUD (1977), pages A-34 to A-39. The simpler procedure is to ask a manufacturer for design information. Most manufacturers will provide this factor or calculate it. Be prepared to supply the following information:

a. The physical characteristics of the two fluids in the heat exchanger.
b. The amount of heat to be transferred (Btu/hr).
c. The flow rates (gal/min) on both sides of the heat exchanger.
d. The approach temperature difference defined as the difference between the temperatures of the hot fluid entering the heat exchanger and the heated fluid leaving the heat exchanger.

Alternatively, one could assume an effectiveness that is reasonable (say 0.7), then complete the following worksheets. If the design appears feasible, one could then go back and "refine" his estimate by consulting a manufacturer to be sure that a heat exchanger is available that will provide the assumed effectiveness. Such a heat exchanger might be employed if the working fluid were expensive, to reduce the amount of fluid required, or if it were desired to separate working fluid from potable water in a hot water storage tank (see Section 2.1.7 and Figure 2-5).

The term $(mC_p)c/(mC_p)min$ is the ratio of the heat capacity flow rates in the collector-tank heat exchanger. The subscript "c" refers to the collector flow stream; the subscript "min" refers to whichever of the two flowrates has the lesser value.

$$\frac{F'_R}{F_R} = \left\{ 1 + \left[F_R U_L \left(\frac{A_c}{(\dot{m}\, C_p)_c} \right) \right] \left[\frac{(\dot{m}\, C_p)_c}{\varepsilon_c (\dot{m}\, C_p)_{min}} - 1 \right] \right\}^{-1}$$

The ratio F'_R/F_R, line 6, Worksheet B, where F'_R is the collector-tank heat exchanger efficiency factor is calculated from the equation using the factors previously developed. If there is to be no heat exchanger, then this ratio equals 1.0 for air and liquid systems.

Typically, if a heat exchanger is used with an effectiveness of 0.7 as assumed above and if the collector flow $(mC_p)c$, is about the same as the other (storage) flow, $(mC_p)min$, as is often the case, then the ratio F'_R/F_R is about 0.95 to 0.97 for a liquid system. This is not true for air systems which must be calculated. See U.S. Dept HUD (1977). pages A-26 and A-27 for further calculations of this parameter.

The next factor is $\overline{(\tau\alpha)}/(\tau\alpha)_n$, line 7 Worksheet B, where the bar refers to an average value of $(\tau\alpha)$ and subscript "n" refers to the value of $(\tau\alpha)$ taken with the sun normal to the collector. This factor represents the variations in transmittance and absorptance due to changes in the sun angle during the day. Solar collectors are tested near solar noon, and there is a reduction in transmission of insolation at high angles of incidence which occur in early morning or late afternoon. This reduction (called incident angle modifier) may be available from the manufacturer of the collector since it is a parameter that is measured as part of normal ASHRAE 93-77 performance test. If it is not available it may be taken as a constant as follows:

$$\frac{\overline{(\tau\alpha)}}{(\tau\alpha)_n} = \begin{cases} 0.91 \text{ for two cover plates} \\ 0.93 \text{ for one cover plate} \end{cases}$$

In the final two parameters on Worksheet B, corrections for heat exchanger effectiveness (ε_c) and off-angle solar collection are made to the basic measured parameters to result in $F'_R\overline{(\tau\alpha)}$ and $F'_R U_L$, which will be used in Worksheet D-1.

3.3 Load calculations - Worksheet C-l. Worksheet C-l is an aid to calculating the space heating and DHW load for family housing. For other buildings use conventional methods of calculating load; computer programs are available for this. For existing buildings, heating load may be inferred from fuel bills, if available, see Example 1 (Section 4.1); or the Btu/ft^2 degree-day (dd) method of Worksheet C-l may be used. Table 3-1 gives estimated Btu/ft^2-dd heat loss rates for various structural types used in family housing. If net heat loss rate is based on amount of fuel used, load is gross load and must be multiplied by furnace efficiency to get net heating load.

Table 3-1. Building Heat Loss Rates.

Construction	Net Loss Coefficient (Btu/ft degree-day)
A. Brick veneer, 4-bedroom house, asphalt roof, storm windows, no insulation, 15 mph wind	15.3
B. Same as A, but with 3-1/2-inch batts in walls and attic	9.3
C. Same as B, but with 6 inches insulation in attic	8.7
D. Same as B, but with 12 inches insulation in attic	8.4
E. Stucco over frame, 4-bedroom house, shake roof, 3-inch insulation in attic only	14.1
F. Frame, 3-bedroom, heated basement, 3-1/2-inch batts in walls, 5-1/2-inch batts in ceiling	11.7

If Table 3-1 is not used, or if space heating loads for other types of buildings are desired the following sources give details on how to calculate loads:

a. The ASHRAE Handbook of Fundamentals describes the basic method for calculating heat losses in a chapter entitled "Heating Load."
b. U.S. Dept HUD (1977), page 16, Section 3.3.1, describes a modified degree-day method for space heating loads.

Table 3-2 contains degree-day data for use in Worksheet C-1. This data is excerpted from Solar Energy Research Institute (1980). Additional locations are available in U.S. NOAA (1968) and U.S, NAVFACENGCOM (1978). Hot water usage is calculated on Worksheet C-2 (see Section 3.4) and transferred to Worksheet C-1. Net DHW use is desired; if gross figure based on fuel usage is the starting point, then it must be multiplied by heater efficiency to get net DHW load. Utilization efficiency rather than an equipment efficiency should be used (see DM-3). Total net heating load is sum of space and DHW loads.

3.4 Demand calculations - DHW - worksheet C-2. Worksheet C-2 summarizes DHW demand determined by conventional methods: Manual DM-3, chapter 1. Table 2-9 (Section 2.3) gives hot water demands for various buildings. Table 3-3 gives temperature of water mains for various locations. Net DHW load, Q_{d} x N_{o}, (Q_{d} is Btu/day hot water demand) is transferred to column (W), Worksheet C-1, if a combined space heating DHW system is being designed. If hot water demand is calculated from fuel bills, a gross figure is obtained, which is entered in column (U), Worksheet C-1. Net demand = gross x [eta]$_{w}$, where [eta]$_{w}$ = heater utilization efficiency.

Table 3-2

TABLE 3-2 Total Heating Degree Days (Base 65°F) from Solar Energy Research Institute (1980).

STATE AND STATION	JAN	FEB	MAR	APR	MAY	JUN	JUL	AUG	SEP	OCT	NOV	DEC	ANNUAL
ALABAMA													
Birmingham	653	517	389	115	20	0	0	0	5	137	391	614	2844
Mobile	450	337	220	40	0	0	0	0	0	38	211	383	1683
Montgomery	554	418	299	76	7	0	0	0	0	92	306	511	2268
ALASKA													
Adak *	ND	ND	ND	ND	ND	ND	ND	ND	ND	ND	ND	ND	ND
Annette	976	792	828	666	482	317	230	211	329	560	752	907	7052
Barrow	2470	2340	2486	1976	1422	956	814	848	1040	1541	1964	2396	20264
Fairbanks	2383	1890	1719	1082	549	211	148	302	617	1233	1865	2336	14342
Kodiak	1073	940	1019	842	675	459	337	311	450	752	905	1087	8860
ARIZONA													
Phoenix	427	292	184	59	0	0	0	0	0	16	182	387	1552
Tucson	441	333	243	81	0	0	0	0	0	29	220	401	1751
Yuma	308	191	95	23	0	0	0	0	0	4	108	275	1010
ARKANSAS													
Fort Smith	805	607	470	131	16	0	0	0	0	135	437	729	3335
Little Rock	790	617	470	139	20	0	0	0	4	142	441	724	3353
CALIFORNIA													
Bakersfield	542	353	265	139	22	0	0	0	0	54	275	529	2183
China Lake *	ND	ND	ND	ND	ND	ND	ND	ND	ND	ND	ND	ND	ND
Daggett	549	371	270	117	13	0	0	0	0	56	295	526	2201
El Toro *	ND	ND	ND	ND	ND	ND	ND	ND	ND	ND	ND	ND	ND
Fresno	610	423	344	182	50	9	0	0	0	90	344	594	2650
Long Beach	338	272	247	148	70	22	0	0	5	47	155	293	1606
Los Angeles	372	302	288	219	158	81	28	22	42	78	180	291	2061
Oakland	508	365	349	270	193	113	79	74	58	135	290	468	2909
Point Mugu *	ND	ND	ND	ND	ND	ND	ND	ND	ND	ND	ND	ND	ND
San Diego	313	236	218	144	77	50	5	0	14	41	139	256	1507
San Francisco	517	385	371	290	209	119	92	83	65	137	290	473	3042
Santa Maria	450	364	378	302	245	166	112	101	94	158	270	409	3053
Sunnyvale *	ND	ND	ND	ND	ND	ND	ND	ND	ND	ND	ND	ND	ND

*ND - No Data

Table 3-2 con't

TABLE 3-2. Total Heating Degree Days (Base 65°F) from Solar Energy Research Institute (1980). (Continued)

STATE AND STATION	JAN	FEB	MAR	APR	MAY	JUN	JUL	AUG	SEP	OCT	NOV	DEC	ANNUAL
COLORADO													
Colorado Springs	1127	943	920	563	301	103	9	13	155	455	824	1053	6473
Denver	1087	902	868	524	252	79	0	0	119	407	767	1003	6016
Grand Junction	1190	878	738	403	131	20	0	0	59	324	756	1100	5403
CONNECTICUT													
Hartford	1246	1069	911	518	225	23	0	11	104	383	731	1139	6349
CUBA													
Guantanamo Bay*	ND	ND	ND	ND	ND	ND	ND	ND	ND	ND	ND	ND	ND
DELAWARE													
Wilmington	1022	878	724	380	128	0	0	0	31	254	578	938	4939
DISTRICT OF COLUMBIA													
Washington/Sterling	1019	873	718	356	130	4	0	0	41	290	608	959	5009
FLORIDA													
Apalachicola	367	290	175	29	0	0	0	0	0	22	157	317	1361
Jacksonville	347	781	175	23	0	0	0	0	0	18	160	317	1327
Miami	52	67	16	0	0	0	0	0	0	0	13	54	205
Tampa	202	175	90	9	0	0	0	0	0	0	70	167	716
GEORGIA													
Atlanta	700	560	443	144	27	0	0	0	7	137	407	664	3094
Augusta	599	473	346	90	9	0	0	0	0	103	344	576	2547
Savannah	482	378	256	63	0	0	0	0	0	59	252	457	1951
HAWAII													
Barbers Point *	ND	ND	ND	ND	ND	ND	ND	ND	ND	ND	ND	ND	ND
Hilo	0	0	0	0	0	0	0	0	0	0	0	0	0
Honolulu	0	0	0	0	0	0	0	0	0	0	0	0	0
Lihue	0	0	0	0	0	0	0	0	0	0	0	0	0
IDAHO													
Boise	1116	824	740	479	252	95	0	11	126	405	756	1019	5832
Lewiston	1048	752	684	441	230	83	0	16	122	409	734	936	5463
ILLINOIS													
Chicago	1262	1053	873	452	207	25	0	7	56	315	738	1130	6125
Springfield	1186	968	794	362	131	11	0	7	47	281	693	1069	5557

Table 3-2 con't

TABLE 3-2. Total Heating Degree Days (Base 65°F) from Solar Energy Research Institute (1980). (Continued)

STATE AND STATION	JAN	FEB	MAR	APR	MAY	JUN	JUL	AUG	SEP	OCT	NOV	DEC	ANNUAL
INDIANA													
Evansville	1003	814	652	263	94	4	0	0	32	236	603	920	4628
Indianapolis	1148	959	783	387	158	11	0	4	63	301	698	1057	5576
South Bend	1271	1084	920	506	245	34	5	23	97	367	761	1139	6462
IOWA													
Des Moines	1413	1141	963	464	185	25	0	13	94	349	815	1238	6709
Mason City	1575	1301	1116	578	265	63	13	31	164	455	941	1391	7900
KANSAS													
Dodge City	1058	833	738	344	113	20	0	0	40	247	666	979	5045
Topeka	1147	884	743	328	117	13	0	0	54	257	662	1028	5242
KENTUCKY													
Lexington	994	832	671	301	104	7	0	0	40	245	612	914	4729
Louisville	983	817	661	284	104	4	0	0	34	239	599	911	4644
LOUISIANA													
Lake Charles	414	306	200	25	0	0	0	0	0	30	176	377	1498
New Orleans	401	299	187	29	0	0	0	0	0	40	178	326	1463
Shreveport	551	416	290	65	4	0	0	0	0	68	277	490	2165
MAINE													
Caribou	1683	1458	1282	848	473	169	83	121	326	657	1008	1516	9632
Portland	1348	1179	1028	668	380	104	27	54	200	491	792	1217	7497
MARYLAND													
Baltimore	979	846	688	338	110	0	0	0	27	248	567	920	4729
MASSACHUSETTS													
Boston	1109	968	833	491	218	27	0	7	76	301	594	992	5620
MICHIGAN													
Detroit	1244	1066	918	506	238	25	0	11	79	342	716	1096	6228
Grand Rapids	1296	1134	988	554	270	43	7	27	113	409	788	1165	6800
Sault Ste. Marie	1575	1393	1271	803	495	200	95	124	290	581	965	1391	9193
MINNESOTA													
Duluth	1750	1480	1287	792	482	193	67	103	317	610	1098	1568	9756
Minneapolis/St. Paul	1636	1357	1138	596	270	65	11	20	173	472	977	1436	8158
MISSISSIPPI													
Jackson	569	441	311	74	5	0	0	0	0	90	301	504	2299

Table 3-2 con't

TABLE 3-2. Total Heating Degree Days (Base 65°F) from Solar Energy Research Institute (1980). (Continued)

STATE AND STATION	JAN	FEB	MAR	APR	MAY	JUN	JUL	AUG	SEP	OCT	NOV	DEC	ANNUAL
MISSOURI													
Columbia	1107	878	729	313	117	11	0	4	41	247	632	997	5081
Kansas City	1174	914	752	335	126	14	0	0	49	257	680	1044	5357
St Louis	1044	837	680	272	103	9	0	0	34	223	599	941	4748
MONTANA													
Billings	1336	1053	1003	612	333	130	9	14	220	486	878	1183	7265
Great Falls	1379	1075	1069	648	365	162	18	41	259	524	911	1193	7652
Missoula	1370	1057	983	632	396	200	38	70	301	648	981	1247	7931
NEBRASKA													
North Omaha	1388	1105	941	455	185	32	5	9	99	342	812	1217	6601
Scotts Bluff	1242	994	950	563	279	90	0	7	158	459	864	1157	6773
NEVADA													
Elko	1296	1001	929	644	405	189	27	59	247	560	905	1211	7483
Las Vegas	644	450	324	126	9	0	0	0	0	74	356	614	2601
Reno	1026	779	765	545	328	144	16	49	167	455	747	992	6021
NEW HAMPSHIRE													
Concord	1375	1186	1013	623	315	58	14	45	182	486	810	1246	7358
NEW JERSEY													
Newark	1040	905	756	398	142	0	0	0	32	243	563	945	5033
NEW MEXICO													
Albuquerque	923	698	594	281	58	0	0	0	5	218	614	893	4291
Farmington	1127	839	756	464	184	36	0	5	67	374	774	1082	5711
Roswell	833	617	486	184	20	0	0	0	16	194	542	796	3695
NEW YORK													
Albany	1348	1161	979	542	252	38	9	22	135	421	761	1211	6887
Buffalo	1280	1136	1019	603	320	58	11	32	137	418	756	1148	6926
New York City (Laguardia)	1019	893	756	398	144	0	0	0	29	223	531	911	4909
NORTH CAROLINA													
Cape Hatteras	610	536	457	187	47	0	0	0	0	76	275	535	2731
Greensboro	814	682	544	202	58	0	0	0	23	209	500	787	3825

Table 3-2 con't

TABLE 3-2. Total Heating Degree Days (Base 65°F) from Solar Energy Research Institute (1980). (Continued)

STATE AND STATION	JAN	FEB	MAR	APR	MAY	JUN	JUL	AUG	SEP	OCT	NOV	DEC	ANNUAL
NORTH DAKOTA													
Bismarck	1760	1442	1237	659	338	121	18	34	252	563	1082	1530	9043
Minot	1769	1462	1282	716	383	149	27	68	284	585	1112	1559	9407
OHIO													
Cincinnati (Covington, Ky)	1049	887	722	340	137	9	0	0	43	270	635	968	5069
Cleveland	1181	1039	895	500	243	40	9	16	94	353	702	1075	6152
OKLAHOMA													
Oklahoma City	873	662	531	180	36	0	0	0	11	148	473	774	3694
OREGON													
Medford	878	662	625	443	248	94	11	20	88	360	644	846	4928
Pendleton	1022	731	657	423	220	68	5	13	95	383	707	907	5240
Portland	833	621	598	432	263	128	47	56	119	346	590	752	4792
PACIFIC ISLANDS													
Koror Island	0	0	0	0	0	0	0	0	0	0	0	0	0
Kwajulein Island	0	0	0	0	0	0	0	0	0	0	0	0	0
Wake Island	0	0	0	0	0	0	0	0	0	0	0	0	0
PENNSYLVANIA													
Philadelphia	1013	869	715	365	121	0	0	0	38	248	563	923	4864
Pittsburgh	1143	999	833	443	207	25	5	14	97	371	711	1069	5929
PUERTO RICO													
San Juan	0	0	0	0	0	0	0	0	0	0	0	0	0
RHODE ISLAND													
Providence	1134	995	869	531	257	36	0	9	92	349	650	1039	5971
SOUTH CAROLINA													
Charleston	520	418	299	68	4	0	0	0	0	74	270	484	2146
Greenville/ Spartanburg	704	576	450	144	29	0	0	0	9	144	419	684	3163
SOUTH DAKOTA													
Rapid City	1336	1098	1048	612	319	133	13	16	191	473	887	1193	7322
Sioux Falls	1575	1276	1084	567	257	65	9	18	164	464	956	1395	7837

Table 3-2 con't

TABLE 3 2. Total Heating Degree Days (Base 65°F) from Solar Energy Research Institute (1980). (Continued)

STATE AND STATION	JAN	FEB	MAR	APR	MAY	JUN	JUL	AUG	SEP	OCT	NOV	DEC	ANNUAL
TENNESSEE													
Memphis	760	594	455	130	22	0	0	0	5	140	423	689	3226
Nashville	828	671	524	175	45	0	0	0	9	180	497	761	3695
TEXAS													
Amarillo	898	707	599	274	81	9	0	0	20	205	560	821	4181
Austin	482	344	221	43	0	0	0	0	0	38	203	398	1737
Corpus Christi	302	198	119	0	0	0	0	0	0	5	81	218	929
Dallas	607	439	313	70	0	0	0	0	0	54	283	520	2290
El Paso	662	464	328	88	0	0	0	0	0	92	401	639	2677
Houston	416	293	189	22	0	0	0	0	0	23	155	333	1433
UTAH													
Cedar City	1125	893	824	536	281	85	0	5	113	423	785	1085	6136
Salt Lake City	1147	884	787	473	236	86	0	4	104	401	776	1075	5981
VERMONT													
Burlington	1494	1298	1112	659	329	63	20	49	191	500	839	1314	7875
VIRGINIA													
Norfolk	760	661	531	225	52	0	0	0	9	140	401	704	3487
Richmond	851	716	569	225	63	0	0	0	20	202	479	805	3938
Roanoke	886	752	610	283	101	0	0	0	31	234	549	855	4306
WASHINGTON													
Seattle/Tacoma	830	635	648	488	311	166	79	81	169	369	612	760	5184
Spokane	1228	918	851	567	326	144	20	47	194	533	884	1116	6835
WEST VIRGINIA													
Charleston	945	797	641	286	112	9	0	0	45	266	587	893	4590
WISCONSIN													
Green Bay	1537	1316	1127	635	337	90	22	54	191	490	927	1346	8096
Madison	1494	1251	1078	590	297	72	13	38	173	473	909	1336	7719
Milwaukee	1413	1190	1040	608	347	90	14	36	139	439	855	1264	7443
WYOMING													
Cheyenne	1190	1008	1035	668	392	155	22	31	225	529	884	1109	7254
Rock Springs	1418	1165	1118	747	452	198	18	49	268	628	1028	1314	8410

3.5 Monthly solar collection parameters - Worksheet D-1. Figures for Q_{L} total heat load per month, are transferred to Worksheet D-1. Solar insolation, I, and slope factor, S, are obtained from Table 1-1 and Figure 3-2, respectively, for the location and latitude. If measured I for the location is available for several years, then the average of this data should be used. The slope factor corrects insolation data from the horizontal at which the insolation data were taken, to the tilt angle of the collector. If the tilt angle is latitude +/-15 degrees, then Figure 3-2 may be used for S. For deviation from "latitude +/-15 degrees," see Duffie and Beckman (1974). These calculations apply to south-facing collectors; no correction is needed for collectors facing up to 10 degrees east or west of south. The air temperature, T_{a}, is the average daily temperature taken from local records or the Insolation Data Manual of The Solar Energy Research Institute (1980) which is excerpted in Table 3-4. The factor (T_{ref} - T_{a}) accounts for the effects of ambient air temperature changes on collector heat losses. Then the parameters F_{I} and F_{L} may be calculated. Special care should be taken that the units are consistent, so that F_{I} and F_{L} will have units of ft^{-2}. All units in the tables are correct and consistent for entry directly into the worksheets.

3.6 Fraction of load supplied by solar heat - Worksheet D-2. On Worksheet D-2, first select an area of solar collector for study, based on experience, similar design, or arbitrary size (a collector area approximately one-fourth to one-half the floor area to be heated is a reasonable guess). Area is multiplied by F_{I} and F_{L} factors from Worksheet D-1 and the product is entered on Worksheet D-2. Then from Figure 3-1 pick off the values of f for each set of values of $A_{C}F_{I}$ and $A_{C}F_{L}$. Calculate average f = [SIGMA]Q_{L}f/[SIGMA]Q_{L}. Then select other collector areas, larger or smaller, and repeat above procedure so that a trend may be observed in the following cost analysis calculations. Usually very sunny areas (I > 1800 Btu/ft^{2}-Day) will have highest cost effectiveness at about f~0.75 and not so sunny areas (I~1100 Btu/ft^{2}-Day) at f~0.50.

Storage volume on Worksheet D-2 may be sized by rules of thumb for minimum size. Minimum storage volumes are: one day's usage for DHW only and 1.8 gal/ft^{2} (collector) for space heating and DHW. (See Section 2.2 for sizing storage.) Up to 2.5 days usage for DHW only has been recommended for family dwellings without auxiliary heat for DHW. Up to 5 gal/ft^{2} has been used in some installations for space heating and DHW. The parametric chart (Figure 3-1) has been developed using storage equal to 1.8 gal of water/ft^{2}. Results will not be greatly affected by moderate deviations (1.2 to 2.4) from this value. For storage outside this range consult Beckman (1977), pages 66-67, for correction factors. Normally higher storage capacities will not be cost effective. For liquids other than water the storage figures are modified by multiplying by the ratio of specific heats:

$$C_{p}\ \text{water}/C_{p}\ \text{liquid} = 1.0/C_{p}\ \text{liquid}.$$

Minimum volume of rocks for air system storage is 0.8 ft^{3} per square foot (sq ft) of collector (Section 2.2). If multiple cloudy days are a frequent occurrence, then more auxiliary heat will be used than was planned; the latter problem is relieved if larger storage is used. Consequently, if many cloudy days are expected, then the high end of the "rules of thumb" for storage sizing should be selected (Section 2.2). The cost of energy storage may be calculated from Table 2-8, where, for the approximate size chosen, the various elements of tank order-of-magnitude cost are listed in terms of $/gal.

Table 3-3. DHW Temperature at Source in Selected Locations (U.S. Dept HUD, 1977).

(Temperatures in deg. F]													
City	Source[a]	Jan	Feb	Mar	Apr	May	Jun	Jul	Aug	Sep	Oct	Nov	Dec
1. Phoenix	Ri, Re, W	48	48	50	52	57	59	63	75	79	69	59	54
2. Miami	W	70	70	70	70	70	70	70	70	70	70	70	70
3. Los Angeles	Ri, W	50	50	54	63	68	73	74	76	75	69	61	55
4. Albuquerque	W	72	72	72	72	72	72	72	72	72	72	72	72
5. Las Vegas	W	73	73	73	73	73	73	73	73	73	73	73	73
6. Denver	Ri	39	40	43	49	55	60	63	64	73	56	45	37
7. Ft. Worth	L	56	49	57	70	75	81	79	83	81	72	56	46
8. Nashville	Ri	46	46	53	66	63	69	71	75	75	71	58	53
9. Washington, DC	Ri	42	42	52	56	63	67	67	78	79	68	55	56
10. Salt Lake City	W, C	35	37	38	41	43	47	53	52	48	43	38	37
11. Seattle	Ri	39	37	43	45	48	57	60	68	66	57	48	43
12. Boston	Re	32	36	39	52	58	71	74	67	60	56	48	45
13. Chicago	L	32	32	34	42	51	57	65	67	62	57	45	35
14. New York City	Re	36	35	36	39	47	54	58	60	61	57	48	45

[a] Abbreviations: C - Creek, L - Lake, Re - Reservoir, Ri - River, W - Well.

Figure 3-2 SIDE TABLE

	NORTH LATITUDE	JAN	FEB	MAR	APR	MAY	JUN	JUL	AUG	SEP	OCT	NOV	DEC
COLLECTOR TILT = LAT. -15°	24°	1.13	1.09	1.04	1.00	0.97	0.96	0.97	1.00	1.04	1.10	1.12	1.15
	32°	1.32	1.24	1.11	0.99	0.93	0.94	0.92	0.98	1.11	1.28	1.34	1.42
	40°	1.67	1.41	1.23	1.01	0.90	0.90	0.89	1.02	1.21	1.42	1.73	1.76
	48°	2.18	1.64	1.15	1.10	0.96	0.80	0.95	1.08	1.43	1.73	2.26	2.56
COLLECTOR TILT = LATITUDE	24°	1.31	1.21	1.08	0.95	0.87	0.94	0.87	0.94	1.08	1.21	1.28	1.37
	32°	1.56	1.39	1.16	0.97	0.79	0.76	0.78	0.96	1.15	1.45	1.56	1.71
	40°	1.95	1.55	1.28	0.98	0.75	0.75	0.74	1.00	1.25	1.57	2.05	2.10
	48°	2.53	1.80	1.57	1.08	0.90	0.74	0.89	1.05	1.49	1.90	2.63	3.04
COLLECTOR TILT = LAT. +15°	24°	1.40	1.25	1.06	0.80	0.70	0.67	0.70	0.79	1.05	1.27	1.36	1.50
	32°	1.69	1.45	1.13	0.89	0.59	0.55	0.58	0.88	1.12	1.54	1.68	1.89
	40°	2.11	1.60	1.25	0.91	0.67	0.65	0.66	0.92	1.23	1.63	2.24	2.30
	48°	2.72	1.85	1.54	1.00	0.79	0.65	0.78	0.97	1.45	1.98	2.84	3.34

NOTE: Choose nearest latitude.
Reasonable interpolation permissible, but usually not necessary. For other tilt angles, see Duffie and Beckman 1974.
Table based on 20 percent diffuse insolation.

Figure 3-2. Slope Factor, S, for use on Worksheet D-1 (Average Over 1 Day).

TABLE 3-4. Average Daytime Ambient Temperatures (°F) from Solar Energy Research Institute (1980).

STATE AND STATION	JAN	FEB	MAR	APR	MAY	JUN	JUL	AUG	SEP	OCT	NOV	DEC	AVERAGE
ALABAMA													
Birmingham	44.2	46.9	53.3	63.2	70.5	77.4	79.9	79.2	73.9	63.3	52.1	45.2	62.4
Mobile	51.2	54.0	59.4	67.9	74.8	80.3	81.6	81.5	77.5	68.9	58.5	52.9	67.4
Montgomery	47.5	50.6	56.5	65.2	72.4	78.9	81.0	80.7	76.0	65.8	55.0	48.5	64.8
ALASKA													
Adak *	ND	ND	ND	ND	ND	ND	ND	ND	ND	ND	ND	ND	ND
Annette	33.5	36.7	38.3	42.8	49.4	54.6	57.8	58.3	54.0	46.9	39.9	35.9	45.7
Barrow	-14.7	-18.6	-15.2	-0.9	19.1	33.0	38.7	37.6	30.3	15.3	-0.5	-12.3	9.3
Fairbanks	-11.9	-2.5	9.5	28.9	47.3	59.0	60.7	55.4	44.4	25.2	2.8	-10.4	25.7
Kodiak	30.4	31.4	32.1	36.9	43.2	49.7	54.1	54.9	50.0	40.7	34.8	29.9	40.7
ARIZONA													
Phoenix	51.2	55.1	59.7	67.7	76.3	84.6	91.2	89.1	83.8	72.2	59.8	52.5	70.3
Tucson	50.9	53.5	57.6	65.5	73.6	82.1	86.3	83.8	80.1	70.1	58.5	52.0	67.8
Yuma	55.4	59.4	63.9	71.2	78.7	85.8	93.7	92.8	87.1	75.9	63.5	56.3	73.7
ARKANSAS													
Fort Smith	39.0	43.3	50.3	62.2	70.1	78.0	82.2	81.4	74.0	63.2	50.4	41.5	61.1
Little Rock	39.5	42.9	50.3	61.7	69.8	78.1	81.4	80.6	73.3	62.4	50.3	41.6	61.0
CALIFORNIA													
Bakersfield	47.5	52.4	56.6	62.7	69.8	76.9	83.9	81.6	76.6	66.9	56.0	47.9	64.9
China Lake *	ND	ND	ND	ND	ND	ND	ND	ND	ND	ND	ND	ND	ND
Daggett	47.3	52.0	56.7	64.3	72.3	80.1	87.3	85.5	79.2	68.1	55.5	48.0	66.4
El Toro *	ND	ND	ND	ND	ND	ND	ND	ND	ND	ND	ND	ND	ND
Fresno	45.3	49.9	53.9	60.3	67.4	73.9	80.6	78.3	73.8	64.2	53.2	45.8	62.3
Long Beach	54.2	55.5	57.2	60.6	64.1	67.3	72.2	73.3	71.8	64.9	60.6	55.5	63.3
Los Angeles	54.5	55.6	56.5	58.8	61.9	64.5	68.5	69.5	68.7	65.2	60.5	56.9	61.7
Oakland	48.6	51.9	53.7	56.1	58.9	61.9	63.1	63.5	64.5	61.1	55.3	49.9	57.4
Point Mugu *	ND	ND	ND	ND	ND	ND	ND	ND	ND	ND	ND	ND	ND
Sacramento	45.1	49.8	53.0	58.3	64.3	70.5	75.2	74.1	71.5	63.3	53.0	45.8	60.3
San Diego	45.8	47.8	50.1	53.8	57.2	59.9	63.9	65.4	63.2	58.4	51.5	47.2	55.4
San Francisco	48.3	51.2	53.0	55.3	58.3	61.6	62.5	63.0	64.1	61.0	55.3	49.7	56.9
Santa Maria	50.5	52.0	52.8	54.9	57.1	59.6	62.1	62.3	62.6	60.4	56.1	51.8	56.9
Sunnyvale *	ND	ND	ND	ND	ND	ND	ND	ND	ND	ND	ND	ND	ND

*ND - No Data

Table 3-4 con't

TABLE 3-4. Average Daytime Ambient Temperatures (°F) from Solar Energy Research Institute (1980). (Continued)

STATE AND STATION	JAN	FEB	MAR	APR	MAY	JUN	JUL	AUG	SEP	OCT	NOV	DEC	AVERAGE
COLORADO													
Colorado Springs	28.6	31.3	35.3	46.2	55.5	64.6	70.7	69.1	60.9	50.5	37.5	31.0	48.4
Denver	29.9	32.8	37.0	47.5	57.0	66.0	73.0	71.6	62.8	52.0	39.4	32.6	50.1
Grand Junction	26.6	33.6	41.2	51.7	62.2	71.3	78.7	75.4	67.2	54.9	39.8	29.5	52.7
CONNECTICUT													
Hartford	24.8	26.8	35.6	47.7	58.3	67.8	72.7	70.4	62.8	52.6	41.3	28.2	49.1
CUBA													
Guantanamo Bay*	ND	ND	ND	ND	ND	ND	ND	ND	ND	ND	ND	ND	ND
DELAWARE													
Wilmington	32.0	33.6	41.6	52.3	62.4	71.4	75.8	74.1	67.9	57.2	45.7	34.7	54.0
DISTRICT OF COLUMBIA													
Washington/Sterling	32.1	33.8	41.8	53.1	62.6	71.1	75.3	73.6	66.9	55.9	44.7	34.0	53.7
FLORIDA													
Apalachicola	53.7	55.8	60.7	68.3	74.9	80.0	81.4	81.5	78.6	70.8	61.1	55.2	68.5
Jacksonville	54.6	56.3	61.2	68.1	74.3	79.2	81.0	81.0	78.2	70.5	61.2	55.4	68.4
Miami	67.2	67.8	71.3	75.0	78.0	81.0	82.3	82.9	81.7	77.8	72.2	68.3	75.5
Tampa	60.4	61.8	66.0	72.0	77.2	81.0	81.9	82.2	80.8	74.4	66.8	61.6	72.2
GEORGIA													
Atlanta	42.4	45.0	51.1	61.1	69.1	75.6	78.0	77.5	72.3	62.4	51.4	43.5	60.8
Augusta	45.8	48.3	54.6	63.8	71.7	78.2	80.4	79.6	74.2	64.1	53.7	46.4	63.4
Savannah	49.9	52.1	58.0	66.1	73.3	79.1	81.1	80.6	76.2	67.1	57.1	50.4	65.9
HAWAII													
Barbers Point *	ND	ND	ND	ND	ND	ND	ND	ND	ND	ND	ND	ND	ND
Hilo	71.2	71.0	71.1	72.2	73.5	74.6	75.3	75.9	75.6	75.0	73.5	71.6	73.4
Honolulu	72.3	72.3	73.0	74.8	76.9	78.9	80.1	80.7	30.4	78.9	76.5	73.7	76.6
Lihue	71.2	71.2	71.7	73.3	75.5	77.5	78.4	79.1	78.8	77.3	75.2	72.5	75.1
IDAHO													
Boise	29.0	35.5	41.1	49.0	57.4	64.8	74.5	72.2	63.1	52.1	39.8	32.1	50.9
Lewiston	31.2	38.1	42.9	50.3	58.1	65.0	73.4	71.5	63.3	51.8	40.5	34.8	51.7
ILLINOIS													
Chicago	24.3	27.4	36.8	49.9	60.0	70.5	74.7	73.7	65.9	55.4	40.4	28.5	50.6
Springfield	26.7	30.4	39.4	53.1	63.4	72.9	76.1	74.4	67.2	56.6	41.9	30.5	52.7

Table 3-4 con't

TABLE 3-4. Average Daytime Ambient Temperatures (°F) from Solar Energy Research Institute (1980). (Continued)

STATE AND STATION	JAN	FEB	MAR	APR	MAY	JUN	JUL	AUG	SEP	OCT	NOV	DEC	AVERAGE
INDIANA													
Evansville	32.6	35.9	44.3	56.7	65.7	74.7	77.8	76.2	69.1	58.2	44.9	35.3	56.0
Indianapolis	27.9	30.7	39.7	52.3	62.2	71.7	75.0	73.2	66.3	55.7	41.7	30.9	52.3
South Bend	24.0	26.3	35.3	48.1	58.4	68.6	72.3	71.0	63.8	53.4	39.6	28.2	49.1
IOWA													
Des Moines	19.4	24.2	33.9	49.5	60.9	70.5	75.1	73.3	64.3	54.3	37.8	25.0	49.0
Mason City	14.2	18.5	29.0	45.7	57.4	67.2	71.3	69.9	60.2	50.5	33.6	20.1	44.8
KANSAS													
Dodge City	30.8	35.2	41.2	54.0	64.0	73.3	79.2	78.1	68.9	57.9	42.8	33.4	54.9
Topeka	28.0	33.4	41.2	54.5	64.5	73.5	78.2	77.2	68.2	57.6	42.9	31.8	54.3
KENTUCKY													
Lexington	32.9	35.3	43.6	55.3	64.7	73.0	76.2	75.0	68.6	57.8	44.6	35.5	55.2
Louisville	33.3	35.8	44.0	55.9	64.8	73.3	76.9	75.9	69.1	58.1	45.0	35.6	55.6
LOUISIANA													
Lake Charles	52.3	55.1	60.3	68.9	75.2	80.7	82.4	82.2	78.4	70.0	60.2	54.3	68.3
New Orleans	52.9	55.6	60.7	68.6	75.1	80.4	81.9	81.9	78.2	69.8	60.1	54.8	68.3
Shreveport	47.2	50.5	56.8	66.4	73.4	80.2	83.2	83.2	77.4	67.5	56.2	49.2	65.9
MAINE													
Caribou	10.7	12.9	23.6	36.7	49.7	59.6	64.9	62.3	54.1	43.8	31.4	16.1	38.8
Portland	21.5	22.9	31.8	42.7	52.7	62.2	68.0	66.4	58.7	49.1	38.6	25.7	45.0
MARYLAND													
Baltimore	33.4	34.8	42.8	53.8	63.7	72.4	76.6	74.9	68.5	57.4	46.1	35.3	55.0
MASSACHUSETTS													
Boston	29.2	30.4	38.1	48.6	58.6	68.0	73.3	71.3	64.5	55.4	45.2	33.0	51.3
MICHIGAN													
Detroit	25.5	26.9	35.4	48.1	58.4	69.1	73.3	71.9	64.5	54.3	41.1	29.6	49.9
Grnad Rapids	23.2	24.5	33.1	46.5	57.1	67.4	71.5	70.0	62.4	52.0	38.7	27.4	47.8
Sault Ste. Marie	14.2	15.2	24.0	38.2	49.0	58.7	63.8	63.2	55.3	46.2	32.8	20.1	40.0
MINNESOTA													
Duluth	8.5	12.1	23.5	38.6	49.4	59.0	65.4	64.1	54.4	45.3	28.4	14.4	38.6
Minneapolis/St. Paul	12.2	16.5	28.3	45.1	57.1	66.9	71.9	70.2	60.0	50.0	32.4	18.6	44.1
MISSISSIPPI													
Jackson	47.1	49.8	56.1	65.7	72.7	79.4	81.7	81.2	76.0	65.8	55.3	48.9	65.0

Table 3-4 con't

TABLE 3-4. Average Daytime Ambient Temperatures (°F) from Solar Energy Research Institute (1980). (Continued)

STATE AND STATION	JAN	FEB	MAR	APR	MAY	JUN	JUL	AUG	SEP	OCT	NOV	DEC	AVERAGE
MISSOURI													
Columbia	29.3	33.6	41.7	55.0	64.4	73.0	77.3	76.0	68.3	58.0	43.9	32.8	54.4
Kansas City	27.1	32.3	40.7	54.2	64.1	73.0	77.5	76.5	68.0	57.6	42.3	31.3	53.7
St Louis	31.3	35.1	43.3	56.5	65.8	74.9	78.6	77.2	69.6	59.1	45.0	34.6	55.9
MONTANA													
Billings	21.9	27.4	32.6	44.6	54.5	62.6	71.8	70.1	58.9	49.3	35.7	26.8	46.3
Great Falls	20.5	26.6	30.5	43.4	53.3	60.8	69.3	67.4	57.3	48.3	34.6	26.5	44.9
Missoula	20.8	27.2	33.3	43.9	52.2	58.9	66.6	65.0	55.3	44.1	32.3	24.7	43.7
NEBRASKA													
North Omaha	20.2	25.5	34.6	50.0	60.9	70.2	75.1	73.7	64.4	54.4	37.9	25.7	49.4
Scotts Bluff	24.9	29.5	34.3	44.2	56.5	65.9	73.7	71.6	61.2	50.2	36.2	27.6	48.2
NEVADA													
Elko	23.2	29.2	35.0	43.5	51.9	59.6	69.5	67.0	57.6	46.9	34.8	25.9	45.4
Las Vegas	44.2	49.1	54.8	63.8	73.3	82.3	89.6	87.4	80.1	67.1	53.3	45.2	65.8
Reno	31.9	37.1	40.3	46.8	54.6	61.5	69.3	66.9	60.2	50.3	40.1	33.0	49.4
NEW HAMPSHIRE													
Concord	20.6	22.6	32.3	44.2	55.1	64.7	69.7	67.2	59.5	49.3	38.0	24.8	45.6
NEW JERSEY													
Newark	31.4	32.6	40.6	51.7	61.9	71.4	76.4	74.6	67.8	57.5	46.2	34.5	53.9
NEW MEXICO													
Albuquerque	35.2	40.0	45.8	55.8	65.3	74.6	78.7	76.6	70.1	58.2	44.5	36.2	56.8
Farmington	28.6	35.0	40.6	49.7	59.5	67.9	75.0	72.6	64.6	52.9	39.2	30.1	51.3
Roswell	38.1	42.9	49.3	59.7	68.5	77.0	79.2	77.9	70.4	59.6	44.9	39.3	59.1
NEW YORK													
Albany	21.5	23.5	33.4	46.9	57.7	67.5	72.0	69.6	61.9	51.4	39.6	25.9	47.6
Buffalo	23.7	24.4	32.1	44.9	55.1	65.7	70.1	68.4	61.6	51.5	39.8	27.9	47.1
New York City (Laguardia)	32.1	33.1	40.6	51.7	61.8	71.5	76.7	74.9	68.1	58.1	47.3	35.6	54.3
NORTH CAROLINA													
Cape Hatteras	45.3	45.8	50.6	58.9	67.0	74.3	78.0	77.5	73.7	65.2	56.0	47.7	61.7
Greensboro	38.7	40.6	47.8	58.6	67.1	74.4	77.2	76.0	69.7	59.2	48.3	39.6	58.1

Table 3-4 con't

TABLE 3-4. Average Daytime Ambient Temperatures (°F) from Solar Energy Research Institute (1980). (Continued)

STATE AND STATION	JAN	FEB	MAR	APR	MAY	JUN	JUL	AUG	SEP	OCT	NOV	DEC	AVERAGE
TEXAS													
Amarillo	36.0	39.7	45.6	56.5	65.6	74.6	78.7	77.6	69.8	59.5	46.3	38.5	57.4
Austin	49.7	53.3	59.5	68.6	75.2	81.6	84.6	84.7	78.9	70.1	59.1	52.3	68.1
Corpus Christi	56.3	59.6	64.9	72.8	77.9	82.4	84.8	85.1	81.0	73.9	64.9	59.1	71.9
Dallas	45.5	49.4	55.8	66.4	73.8	81.6	85.7	85.8	78.2	68.0	55.9	48.2	66.2
El Paso	43.6	48.4	54.6	63.9	72.2	80.3	82.3	80.5	74.2	64.0	51.6	44.4	63.4
Houston	52.1	55.3	60.8	69.4	75.8	81.1	83.3	83.4	79.2	70.9	61.1	54.6	68.9
UTAH													
Cedar City	28.7	33.1	38.4	47.1	56.2	65.0	73.2	71.3	63.2	51.5	38.8	30.8	49.8
Salt Lake City	28.0	33.4	39.6	49.2	58.3	66.2	76.7	74.5	64.8	52.4	39.1	30.3	51.0
VERMONT													
Burlington	16.8	18.6	29.1	43.0	54.8	65.2	69.8	67.4	59.3	48.8	37.0	22.6	44.4
VIRGINIA													
Norfolk	40.5	41.4	48.1	57.8	66.7	74.5	78.3	76.9	71.8	61.7	51.6	42.3	59.3
Richmond	37.5	39.4	46.9	57.8	66.5	74.2	77.9	76.3	70.0	59.3	49.0	39.0	57.8
Roanoke	36.4	38.1	45.3	55.9	64.4	71.7	75.2	74.1	68.0	57.8	46.7	37.4	55.9
WASHINGTON													
Seattle/Tacoma	38.2	42.3	44.1	48.7	54.9	59.8	64.5	63.8	59.6	52.2	44.6	40.5	51.1
Spokane	25.4	32.2	37.5	46.1	54.7	61.5	69.7	68.0	59.6	47.8	35.5	29.0	47.3
WEST VIRGINIA													
Charleston	34.5	36.5	44.5	55.9	64.5	72.0	75.0	73.6	67.5	57.0	45.4	36.2	55.2
WISCONSIN													
Madison	16.8	20.3	30.2	45.3	56.0	65.8	70.1	68.7	59.7	49.9	34.7	21.9	44.9
WYOMING													
Cheyenne	26.6	29.0	31.6	42.7	52.4	61.3	69.1	67.6	58.2	47.9	35.5	29.2	45.9
Rock Springs	19.2	23.4	28.9	40.1	50.4	58.9	68.2	66.1	56.4	44.7	30.7	22.4	42.5

Table 3-4 con't

TABLE 3-4. Average Daytime Ambient Temperatures (°F) from Solar Energy Research Institute (1980). (Continued)

STATE AND STATION	JAN	FEB	MAR	APR	MAY	JUN	JUL	AUG	SEP	OCT	NOV	DEC	AVERAGE
TEXAS													
Amarillo	36.0	39.7	45.6	56.5	65.6	74.6	78.7	77.6	69.8	59.5	46.3	38.5	57.4
Austin	49.7	53.3	59.5	68.6	75.2	81.6	84.6	84.7	78.9	70.1	59.1	52.3	68.1
Corpus Christi	56.3	59.6	64.9	72.8	77.9	82.4	84.8	85.1	81.0	73.9	64.9	59.1	71.9
Dallas	45.5	49.4	55.8	66.4	73.8	81.6	85.7	85.8	78.2	68.0	55.9	48.2	66.2
El Paso	43.6	48.4	54.6	63.9	72.2	80.3	82.3	80.5	74.2	64.0	51.6	44.4	63.4
Houston	52.1	55.3	60.8	69.4	75.8	81.3	83.3	83.4	79.2	70.9	61.1	54.6	68.9
UTAH													
Cedar City	28.7	33.1	38.4	47.1	56.2	65.0	73.2	71.3	63.2	51.5	38.8	30.8	49.8
Salt Lake City	28.0	33.4	39.6	49.2	58.3	66.2	76.7	74.5	64.8	52.4	39.1	30.3	51.0
VERMONT													
Burlington	16.8	18.6	29.1	43.0	54.8	65.2	69.8	67.4	59.3	48.8	37.0	22.6	44.4
VIRGINIA													
Norfolk	40.5	41.4	48.1	57.8	66.7	74.5	78.3	76.9	71.8	61.7	51.6	42.3	59.3
Richmond	37.5	39.4	46.9	57.8	66.5	74.2	77.9	76.3	70.0	59.3	49.0	39.0	57.8
Roanoke	36.4	38.1	45.3	55.9	64.4	71.7	75.2	74.1	68.0	57.8	46.7	37.4	55.9
WASHINGTON													
Seattle/Tacoma	38.2	42.3	44.1	48.7	54.9	59.8	64.5	63.8	59.6	52.2	44.6	40.5	51.1
Spokane	25.4	32.2	37.5	46.1	54.7	61.5	69.7	68.0	59.6	47.8	35.5	29.0	47.3
WEST VIRGINIA													
Charleston	34.5	36.5	44.5	55.9	64.5	72.0	75.0	73.6	67.5	57.0	45.4	36.2	55.2
WISCONSIN													
Madison	16.8	20.3	30.2	45.3	56.0	65.8	70.1	68.7	59.7	49.9	34.7	21.9	44.9
WYOMING													
Cheyenne	24.6	29.0	31.6	42.7	52.4	61.3	69.1	67.6	58.2	47.9	35.5	29.2	45.9
Rock Springs	19.2	23.4	28.9	40.1	50.4	58.9	68.2	66.1	56.4	44.7	30.7	22.6	42.5

For instance, for an installed, 100 psi, lined steel tank, add the costs of unlined pressure tank, tank liner, and installation. This figure is entered on Worksheet F. If the ultimate result of the analysis, Worksheet A, shows a cost effective system, then storage size can be increased from the minimum. Increased storage size saves fuel, and reduces the uncertainty in meeting the predicted f due to the approximate averaged method used here to calculate the heating load.

3.7 Economic analysis. The following sections present ways to evaluate the cost effectiveness of the solar system. The first step is to calculate the savings due to the decreased use of a fossil fuel. From this is deducted any operating or maintenance costs. The net savings is then compared to the cost of purchasing and installing the solar system (Section 3.9), using a present worth analysis and savings investment ratio. Any system shall be considered economic where the initial investment cost is recovered in energy savings over the life of the facility (25 years for new, 15 years for retrofit). If the reader uses different economic techniques at his duty station (ECIP projects, etc.) then these worksheets need not be used. Nevertheless the methods proposed will provide a valid comparison of solar systems and give a reasonable measure of their cost effectiveness. If the worksheets are not used, an approximate estimate of energy savings is given by ASHRAE SPSP10, "Handbook of Experiences in the Design and Installation of Solar Heating and Cooling Systems":

For DHW systems - 0.22 X 10^{6} Btu/yr per sq ft of collector.
For space heating systems - 0.19 X 10^{6} Btu/yr per sq ft of collector.

Use these only as gross estimates. They are accurate to about 5-10%.

3.7.1 Fuel Savings - Worksheet E-1. On Worksheet E-1, the value of the fuel saved by the solar heat collected is calculated for the several collector areas chosen.

$$\text{Value of fuel} = \frac{\bar{f} \times Q_{[L]}\,{}_{[t]} \times C_{[f]}}{[\text{eta}]_{[w]}}$$

where: $\bar{f}$ = yearly average fraction of heat load supplied by solar heat.

$Q_{[L]}\,{}_{[t]}$ = total yearly heating and DHW load (10^{6} Btu).

$C_{[F]}$ = cost of fuel in \$/10^{6} Btu (use DEIS II data ⊃rom NAVFACENGCOM).

$[\text{eta}]_{[w]}$ = utilization efficiency of space heater, DHW heater or an average efficiency in combined system.

For the purpose of calculating $/10^6 Btu, use the conversion factors given here:

ENERGY CONVERSION FACTORS

Energy Content of Fuels	Crude Oil Equiv., Barrels (1)	British Thermal Units (Btuh)(2)	Kilowatt-Hours (kwh)
Anthracite coal, short ton	4.38	28,300,000	7440.0
Bituminous coal, short ton	4.24	24,580,000	7240.0
Average coal, short ton		24,020,000	7040.0
Automotive gasoline, gallon	0.0216	125,000	36.6
Aviation gasoline, gallon	0.0216	125,000	36.6
Jet fuel kerosene type, gallon	0.0234	135,000	39.5
Jet fuel naptha type, gallon	0.0219	127,000	37.2
Kerosene, gallon	0.0234	135,000	39.5
Diesel oil, gallon	0.0239	138,700	40.7
Distillate fuel oil (No. 2), gallon	0.0239	138,700	40.7
(3) Distillate fuel oil (No. 2), barrel	1.004	5,825,000	1707.0
Residual fuel oil, gallon	0.0258	149,700	43.9
(3) Residual fuel oil, barrel	1.084	6,287,000	1843.0
Natural gas, standard cubic foot (SCF), One therm = 10^5 Btu	0.000178	1,031	0.302
Liquified petroleum gas, SCF		2,522	
(including propane and butane) GAL		95,000	
Electricity, Btu of fuel consumed at fossil fuel power plant per kwh delivered to consumer (Assume 10.536 Btu/kwh station heat rate for all stations. 9% line loss as reported for 1971 by Edison Electric Institute.)	0.0020	11,600	3.40
Steam, Btu of fuel consumed at boiler plant per pound of steam delivered to consumer (Assume 1000 Btu/lb of steam generated. 82% boiler efficiency and 12% line loss.)	0.00019	1,390	0.407

NOTES:

(1) Converted from Department of Interior (DOI) figures using 5.80 x 10^6 Btu/bbl crude oil (42 gal/bbl).
(2) This Btu column is based on DOI conversion factors of 22 August 1973.
(3) Used in the DOD Matrix II Report RCS DD-I&L (AR&Q) 1284.

Fuel costs are available from activity copy of DEIS II report or from NAVFACENGCOM DEIS II report. Fuel costs should be escalated (above the general inflation rate) by the factors given here:

ANNUAL ENERGY ESCALATION DIFFERENTIAL RATES

	FY 79 & 80	FY 81 thru 83	FY 84 & Beyond
Fuel Oil	16 Percent	14 Percent	8 Percent
Natural Gas & Liquefied Petroleum	15 Percent	14 Percent	8 Percent
Electricity	16 Percent	13 Percent	7 Percent

Use latest available fuel escalation rates, such as ECIP Guidance, NAVFAC Criteria, DoD Criteria, etc. These rates, which are really future projections, change often.

3 7.2 Operating and maintenance (O&M) costs. Depending on the type of solar system selected these costs will vary from 0% to as high as 10% of the initial installed cost of the system. These annual costs must be deducted from the annual fuel savings, however they do not have to be escalated above the general rate of inflation. Certain economic analysis techniques (Section 3.7.3.2) set these costs equal to zero. Current guidance is to use about 3% per year for O&M on flat plate solar collector systems. More elaborate systems such as concentrating collectors, evacuated tube collectors, glycol systems may require a higher O&M cost. A certain amount of judgement may have to be used in assessing the O&M costs based on the user's experience with other or similar systems already installed. In lieu of such knowledge it is recommended that these costs be carefully investigated either with the manufacturer or other published data. At this time O&M costs of 3% - 8% would not be unreasonable for high maintenance systems. See also Durlak (1983) for more information on maintenance items.

3.7.3 Present worth analysis and savings investment ratio. The technique of present worth analysis (NAVFAC Manual P-442) effectively compares costs and savings which occur in the future with capital costs that are incurred immediately as the project is constructed. A discount factor is used which accounts for the time value of money in an inflationary economy. In addition differential escalation rates are used to account for the fact that some items (such as fuel) increase in cost faster than the general inflation rate. ln an attempt to fairly estimate the worth of a proposed project, various rates have been assigned to the discount factor and differential escalation rates over the years. The current differential escalation rates are given in Section 3.7.1. Historically, the discount factor has been 10%, but as of mid FY 81, DOD was instructed to use the 7% discount factor. Also for an interim period from about December 1978 to early 1981, a 0% discount factor was recommended by NAVFACINST 11010.14M, dated 14 December 1978.

Current NAVFAC instructions should be consulted to see which factors apply to which projects. Tables are supplied to allow each method to be calculated as follows:

10% discount factors - Table 3-5a
0% discount factors - Table 3-5b
7% discount factors - Table 3-5c

Various differential escalation rates are given with each table. Consult NAVFAC P-442 for rates not given. The tables are given for 25 years lifetime. Shorter periods can be calculated also.

The Savings Investment Ratio (SIR) compares the lifetime discounted savings and costs with the initial costs as follows:

$$SIR = \frac{\text{(Lifetime Energy Savings) - (Lifetime O\&M costs)}}{\text{Initial cost of system}}$$

A ratio greater than 1.0 is desired indicating the project is cost effective. Methods to calculate SIR either using a discount factor or not using one are given in the next two sections.

3.7.3.1 Present worth analysis using a discount factor - Worksheet E-1 or E-2. The present worth of the lifetime energy savings is:

$$\text{LIFETIME ENERGY SAVINGS} = \begin{bmatrix} \text{Fuel} \\ \text{savings} \\ \text{from} \\ \text{3.7.1} \end{bmatrix} \times \text{(EFC)} \times \text{(PWF)}$$

Where:

a. Fuel savings are calculated in Section 3.7.1.
b. (EFC) - Escalates fuel cost from present cost to anticipated first year occupancy. See Table, Section 3.7.1. Enter in Worksheet E-1, column (5).
c. (PWF) is present worth factor from Table 3-5a (10% discount) or Table 3-5b (7% discount).

A year by year summary can be calculated on Worksheet E-2 or the answer may be obtained by a single multiplication using factors from the tables. For example, the present worth of 25 years fuel saved with differential inflation rates and discount factors are as follows:

For 10% discount, from Table 3-5a

Present worth = 18.049 x value of fuel saved/yr - 7% inflation
= 20.050 x value of fuel saved/yr - 8% inflation
= 25.000 x value of fuel saved/yr - 10% inflation

For 7% discount, from Table 3-5c

Present worth = 12.057 x value of fuel saved/yr - 0% inflation
= 19.931 x value of fuel saved/yr - 5% inflation
= 28.146 x value of fuel saved/yr - 8% inflation

Use these values for Worksheet E-1, column (6). The inflation rate for fuel oil, natural gas and LPG is currently 8%.

LIFETIME O&M COSTS - (WORKSHEET E-1)

The present worth of these costs are calculated the same as the fuel savings, except zero inflation is assumed.

LIFETIME O&M COSTS = [Cost determined from Section 3.7.2] x (PWF)

For 10% discount, 0% inflation, 25 years, the present worth is 9.52 times the cost (from Table 3-5a).

For 7% discount, 0% inflation, 25 years, the present worth is 12.057 times the cost (from Table 3-5c). Use these factors for Worksheet E-1, column (8).

The net fuel savings (Lifetime fuel savings minus Lifetime O&M costs) are computed on Worksheet E-1, column (9) and transferred to Worksheet A, column (y) to compute SIR. Complete for each collector area under study.

3.7.3.2 Present worth analysis without the discount factor - Worksheet E-1. This method was recommended by NAVFACINST 11010.14M, 14 December 1978, and may still be applicable to some projects. This method generally calculates the cost effectiveness in the "most favorable" way. Hence, if such a calculation is desired this method would be the choice. DoD policy will specify the method to be used, therefore this method should only be used in the appropriate circumstances. Generally O&M costs are set equal to zero in this method; therefore, column (8) of Worksheet E-1 should equal zero. However, the user may assume an O&M cost and it is recommended to do so especially in high maintenance systems. Flat plate systems are assumed to have 0% O&M for this method.

The calculation method is the same as Section 3.7.3 (with a discount factor) except that the present worth factors are from Table 3-5b and as noted above the O&M costs are usually equal to zero. For 25 years lifetime, and 8% inflation rate the present worth factor for Worksheet E-1, column (7) is 78.954. The present worth of the net fuel savings, Worksheet E-1, column (9), are transferred to Worksheet A, column (y). Complete for each collector area under study.

3.8 Collector temperatures - Worksheet E-1. Fluid temperature rise through collector is of interest and may be calculated from:

$$T_{[o]} - T_{[i]} \frac{(f)(Q_{[L]})(N_{[o]})}{G\ C_{[p]}\ [theta]\ A_{[c]}}$$

Table 3-5a. Annual Fuel Inflation Factors, 10% Discount.

[Compound Amount Factors — Factor B, Worksheet E-2, or Column (2), Worksheet E-1]

Example Year	0% Inflation 10% Discount		5% Inflation 10% Discount		7% Inflation 10% Discount		8% Inflation 10% Discount		9% Inflation 10% Discount		10% Inflation 10% Discount	
	Single Amount	Cumulative Series	Single Amount	Cumulative Series	Single Amount	Cumulative Series	Single Amount	Cumulative Series	Single Amount	Cumulative Series	Single Amount	Cumulative Series
1	0.954	0.954	0.982	0.982	0.986	0.986	0.991	0.991	0.995	0.995	1.000	1.000
2	0.867	1.821	0.946	1.928	0.959	1.946	0.973	1.964	0.986	1.982	1.000	2.000
3	0.788	2.609	0.912	2.839	0.933	2.879	0.955	2.919	0.977	2.959	1.000	3.000
4	0.717	3.326	0.878	3.718	0.908	3.787	0.938	3.857	0.969	3.928	1.000	4.000
5	0.652	3.977	0.847	4.564	0.883	4.670	0.921	4.777	0.960	4.887	1.000	5.000
6	0.592	4.570	0.816	5.380	0.859	5.529	0.904	5.681	0.951	5.839	1.000	6.000
7	0.538	5.108	0.786	6.166	0.836	6.364	0.888	6.569	0.942	6.781	1.000	7.000
8	0.489	5.597	0.757	6.923	0.813	7.177	0.871	7.440	0.934	7.715	1.000	8.000
9	0.445	6.042	0.730	7.653	0.791	7.968	0.856	8.296	0.925	8.640	1.000	9.000
10	0.405	6.447	0.703	8.357	0.769	8.737	0.840	9.136	0.917	9.557	1.000	10.000
11	0.368	6.815	0.678	9.035	0.748	9.485	0.825	9.961	0.909	10.465	1.000	11.000
12	0.334	7.149	0.653	9.688	0.728	10.212	0.810	10.770	0.900	11.366	1.000	12.000
13	0.304	7.453	0.629	10.317	0.708	10.920	0.795	11.565	0.892	12.258	1.000	13.000
14	0.276	7.729	0.607	10.924	0.688	11.608	0.781	12.346	0.884	13.142	1.000	14.000
15	0.251	7.980	0.584	11.508	0.670	12.278	0.766	13.112	0.875	14.018	1.000	15.000
16	0.228	8.209	0.560	12.071	0.651	12.930	0.752	13.865	0.868	14.886	1.000	16.000
17	0.208	8.416	0.543	12.614	0.634	13.563	0.789	14.603	0.860	15.746	1.000	17.000
18	0.189	8.605	0.523	13.137	0.616	14.180	0.725	15.329	0.852	16.598	1.000	18.000
19	0.172	8.777	0.504	13.641	0.600	14.779	0.712	16.041	0.845	17.443	1.000	19.000
20	0.156	8.933	0.486	14.127	0.583	15.363	0.699	16.740	0.837	18.279	1.000	20.000
21	0.142	9.074	0.468	14.595	0.567	15.930	0.687	17.427	0.829	19.109	1.000	21.000
22	0.129	9.203	0.451	15.046	0.552	16.482	0.674	18.101	0.822	19.930	1.000	22.000
23	0.117	9.320	0.435	15.480	0.537	17.019	0.662	18.762	0.814	20.745	1.000	23.000
24	0.107	9.427	0.419	15.899	0.522	17.541	0.650	19.412	0.807	21.551	1.000	24.000
25	0.097	9.524	0.404	16.303	0.508	18.049	0.638	20.050	0.800	22.351	1.000	25.000

NOTES: 1. Consult NAVFAC INSTR for latest fuel inflation factors.
Consult NAVFAC Manual P-442 for Compound Amount Factor tables for inflation rates not given here.
2. These fuel inflation factors are applied to costs which are anticipated to escalate at a rate I% faster than general price levels, where I is the fuel inflation factor.

Table 3-5b. Fuel Inflation Factors - No Discount.

Annuity Amount Factors - Column (7), Worksheet E-1

Year	Inflation Rates							
	6%	7%	8%	10%	13%	14%	15%	16%
1	1.060	1.070	1.080	1.100	1.130	1.140	1.150	1.160
2	2.184	2.215	2.246	2.310	2.407	2.440	2.473	2.506
3	3.375	3.410	3.506	3.641	3.850	3.922	3.994	4.067
4	4.637	4.751	4.867	5.105	5.480	5.611	5.743	5.878
5	5.975	6.153	6.336	6.716	7.322	7.536	7.754	7.979
6	7.394	7.654	7.923					
7	8.897	9.260	9.634					
8	10.491	10.978	11.488					
9	12.181	12.816	13.486					
10	13.972	14.784	15.645					
11	15.870	16.888	17.977					
12	17.882	19.141	20.495					
13	20.015	21.550	23.215					
14	22.276	24.129	26.152					
15	24.673	26.888	29.324					
16	27.213	29.840	32.750					
17	29.906	32.999	36.450					
18	32.760	36.379	40.446					
19	35.786	39.995	44.762					
20	38.993	43.865	49.423					
21	42.392	48.006	54.457					
22	45.995	52.436	59.893					
23	49.815	57.176	65.764					
24	53.865	62.249	72.106					
25	58.264	67.677	78.954					

NOTE: Table gives amount accumulated at end of n years by a given annual payment (annuity) (A, Section 3.7). Factors are for escalation rates compounded annually.

Table 3-5c. Annual Fuel Inflation Factors, 7% Discount.

(Compound Amount Factors - Factor B, Worksheet E-2, or Column(6), Worksheet E-1)

Example Year	0% Inflation 7% Discount		5% Inflation 7% Discount		8% Inflation 7% Discount	
	Single Amount	Cumulative Series	Single Amount	Cumulative Series	Single Amount	Cumulative Series
1	0.967	0.967	0.991	0.991	1.005	1.005
2	0.904	1.871	0.972	1.963	1.014	2.019
3	0.845	2.715	0.954	2.917	1.024	3.042
4	0.789	3.504	0.936	3.853	1.033	4.075
5	0.738	4.242	0.919	4.771	1.043	5.118
6	0.689	4.931	0.901	5.673	1.053	6.171
7	0.644	5.576	0.885	6.557	1.062	7.233
8	0.602	6.178	0.868	7.425	1.072	8.305
9	0.563	6.741	0.852	8.277	1.082	9.387
10	0.526	7.267	0.836	9.113	1.092	10.480
11	0.492	7.758	0.820	9.933	1.103	11.583
12	0.459	8.218	0.805	10.738	1.113	12.695
13	0.429	8.647	0.790	11.528	1.123	13.819
14	0.401	0.048	0.775	12.303	1.134	14.953
15	0.375	9.423	0.761	13.064	1.144	16.097
16	0.350	9.774	0.746	13.811	1.155	17.252
17	0.327	10.101	0.732	14.543	1.166	18.418
18	0.306	10.407	0.719	15.262	1.177	19.595
19	0.286	10.693	0.705	15.967	1.188	20.783
20	0.267	10.961	0.692	16.659	1.199	21.981
21	0.250	11.211	0.679	17.339	1.210	23.192
22	0.234	11.444	0.667	18.005	1.221	24.413
23	0.218	11.662	0.654	18.659	1.233	25.646
24	0.204	11.866	0.642	19.301	1.244	26.890
25	0.191	12.057	0.630	19.931	1.256	28.146

where f = fraction supplied by solar (Worksheet D-2 for month selected)
T_{o} = collector outlet temperature
T_{i} = collector inlet temperature
G = flowrate in lbm/hr ft^2 collector (use 10.0 lbm/hr ft^2)
Q_{L} = heat load, Btu/mo (Worksheet C-1)
C_{p} = specific heat of fluid = 1 Btu/lbm deg. F for water
[theta] = hours of useful sun in day - use 5 hours (winter), 6 hours (summer)
N_{o} = number of days in month
A_{c} = area of solar collector

If a DHW only system is used, then temperature rise may be added to ground water temperature to obtain actual collector outlet temperature. For space heating/DHW systems, the minimum collector outlet temperatures will be the temperature of the water returning from the room heat exchanger plus the temperature rise through the collector. In general, the storage tank bottom temperature is added to temperature rise to obtain actual collector outlet temperature.

3.9 Solar system cost - Worksheet F. Worksheets F and G may be used to convert all costs of the solar installation into cost/ft^2 collector. Since costs can differ significantly for space heating/DHW compared to DHW only, two separate columns are shown. Recent manufacturer's data are best for computations, but Tables 3-6 and 3-7 may be used as representative prices (based on data as of December 1984). Contractor profit is indicated as 20% and is included in tables; another figure may be used if warranted. Solar collector costs are also given in Table 2-6. Total system cost estimate is transferred to Worksheet A.

3.10 Additional costs - Worksheet G. Worksheet G is a convenient checklist to collect costs associated with converting to solar energy. In new building designs, good insulation, weatherstripping, etc., will be called for to save energy, even if solar heating is not adopted; thus, the solar system should not be burdened with these costs in new buildings. Costs are summed and divided by collector area, then cost is transferred to Worksheet F.

3.11 Sizing the heat exchanger for space heating. According to Klein, Beckman, and Duffie (1976):

> The dimensionless parameter [epsilon]$_{L}$ C_{min}/UA, has been found to provide a measure of the size heat exchanger needed to supply solar heat to a specified building. For values of [epsilon]$_{L}$ C_{min}/UA less than 1.0, the reduction in system performance due to too small a heat exchanger will be appreciable. Reasonable values of [epsilon]$_{L}$ C_{min}/UA for solar space heating systems are between 1 and 3 when costs are considered. (This design method has been developed) with [epsilon]$_{L}$ C_{min}/UA equal to 2.0.

C_{min} is heat capacity flowrate, which is the lesser of the two heat capacity flowrates in the load heat exchanger; [epsilon]$_{L}$ is effectiveness of load heat exchanger and UA is overall heat loss coefficient of building times the building area.

Table 3-6. Solar System Component Cost Estimates.[a]

Item	Space/DHW ($/ft^2)	DHW ($/ft^2)
Antifreeze (Heat transfer fluid)	0.60	0.060
Pumps, pipe, controls	4.75	6.75
Heat exchanger	2.00	2.00
Auxiliary heater		
Gross amount	7.00	1.30
Less value of conventional system	(4.00)	(1.30)
Auxiliary heater, net	2.75, net	0, net

[a] December 1984.

Table 3-7. Solar Collector Prices.[a]

Type	Unit Selling Price ($/ft^2)
Plastic, no cover	6.00
Aluminum and copper single glaze	10.00-22.00
Copper, double glazed	20.00-30.00
Aluminum, single glaze free flow (trickle)	8.00-15.00
Plastic, single glaze with insulation	8.00-13.00

[a] December 1978.

NOTES: 1. See Table 2-6 for more specific comparison of cost, collector type, performance, etc.

2. Installed cost is usually double (80%-100%) the selling price.

3.12 Air-heating collector design - Worksheet H. The design procedure for air systems (Klein, Beckman, and Duffie, 1977) is very similar to that for liquid systems - the same worksheets may be used. Figure 3-3 gives the f-chart for this procedure. The procedure was developed using an air flow heat capacitance rate of 2.87 Btu/hr-ft^2 deg. F (about 156 SCF/hr-ft^2). The performance of systems having collector capacitance rates between 1.47 and 5.87 Btu/hr-ft^2 deg. F can be estimated by multiplying the values of $F_L A_C$ $\{[(mc_p)_c/F_R A_C]/2.87\}^{0.28}$ (Klein, Beckman, and Duffie, 1977). To calculate F_R, see Duffie and Beckman (1974), Section 7.7. The rock bed storage heat capacitance assumed was 19.6 Btu/ft^2 deg. F. The performance of systems with other storage capacities can be determined by multiplying the dimensionless group $F_L A_C$ by $[([\rho]VC_{pr}/F_R A_C)/19.6]^{-0.3}$ - (Klein, Beckman, and Duffie, 1977). The standard deviation of the yearly f by this method from the computer simulated value was found to be 0.017 (Klein, Beckman, and Duffie, 1977).

> A comparison of the f-charts for the liquid and air systems indicates that, for the same values of $[F_I A_C]$ and $[F_L A_C]$ the air system outperforms the liquid system particularly for systems designed to supply a large fraction of the heating load .... [Some reasons for this behavior are:] the average collector fluid inlet temperature is lower for the air system (and thus the collector efficiency is higher) than that for the liquid system at times when . . . room air is circulated through the collector and also because the more effective thermal stratification achieved in rock storage results in lower temperature air going to the collector. Also since no heat exchanger is required between collector and storage, that inefficiency is avoided.
>
> It cannot be concluded, however, that air heating systems perform better than liquid systems. The overall collector efficiency factor, F_R, is ordinarily lower for air heaters. As a result $[F_I A_C]$ and $[F_L A_C]$ are ordinarily lower and thus the performance of an air system may be equivalent to or lower than that of a liquid system, all else being the same. (Klein, Beckman, and Duffie, 1977)

Sections 2.1.1 and 2.5 of this document discuss the relative merits of sir systems.

3.13 Worksheets.

A	Job Summary
B	Solar Collector Parameters
C-1	Load Calculations
C-2	Demand Calculations - Domestic Water Heater
D-1	Monthly Solar Collection Parameters
D-2	Fraction of Load Supplied by Solar Heat
E-1	Value of Fuel Saved
E-2	Present Worth Analysis
F	Solar System Cost Analysis
G	Additional Cost Items Related to Use of Solar Heating
H	Solar Air Collector System Design Summary

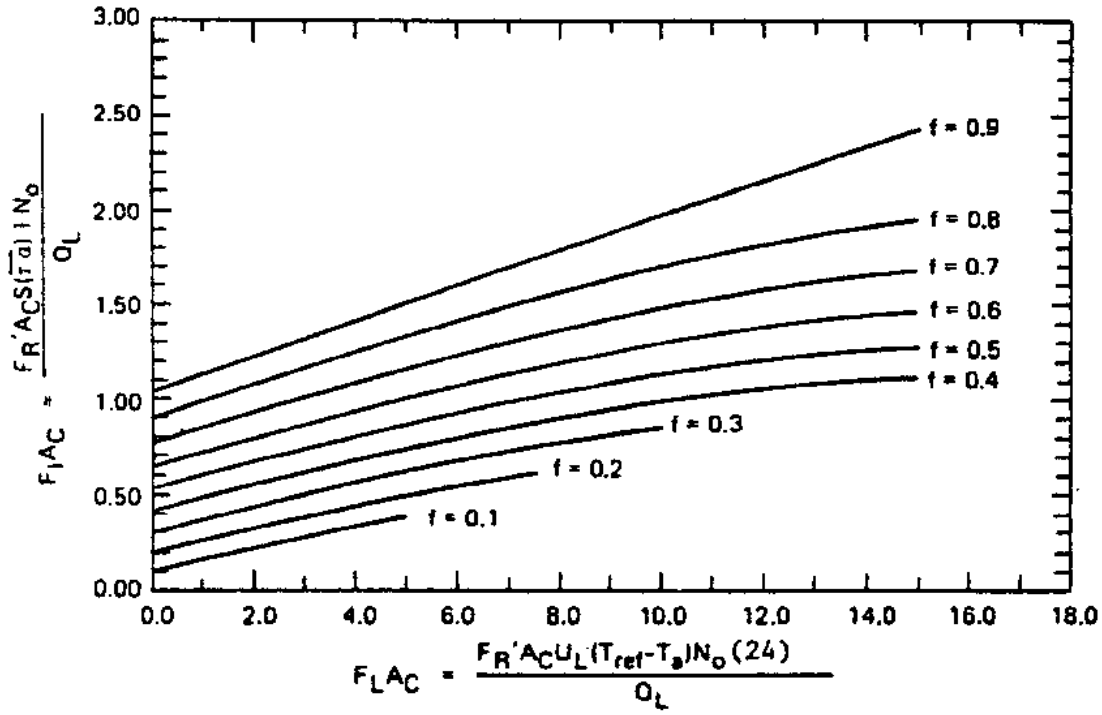

Figure 3-3. Fraction of space heating/DHW load supplied by solar air heating system (after Klein, Beckman, and Duffie, 1977).

WORKSHEET A

Job Summary

Date_____ Job Number_____

Building_____ General Construction_____

Location_____

Occupancy_____ Hours of Occupancy_____

Type of Solar System_____

Building Area_____sq ft No. BR_____ No. Baths_____

Fuel_____Burned in_____@_____% assumed @ Cost_____/10└6┘Btu
efficiency

_____ _____@_____% _____/10└6┘Btu

_____ _____@_____% _____/10└6┘Btu

Solar Collector Description:_____

_____

Approx. Cost, installed, total system $_____/sq ft DHW
(Worksheet F)

$_____/sq ft Space Heating/DHW

(1)		(x)	(y)		
Area (From E-1)	$\bar{f}$ (From E-1)	Solar System Cost (From F)	Value of 25 year Fuel Saved (From E-1 - column (9) Or E-2)	Savings/ Investment Ratio (y)/(x)	Payback Period (NAVFAC Manual P-442)

WORKSHEET B

SOLAR COLLECTOR PARAMETERS

JOB NO. _____

(1) $F_R(\tau\alpha)_n$ = _____

(2) $F_R U_L$ = _____ Langleys/(°F day)

(3) $(\dot{m}C_p)_c/A_c$ = _____

(4) ϵ_c = _____

(5) $\dfrac{(\dot{m}C_p)_c}{(\dot{m}C_p)_{min}}$ = _____

(6) $\dfrac{F_R'}{F_R} = \left\{ 1 + \left[F_R U_L \left(\dfrac{A_c}{(\dot{m}C_p)_c} \right) \right] \left[\dfrac{(\dot{m}C_p)_c}{\epsilon_c (\dot{m}C_p)_{min}} - 1 \right] \right\}^{-1}$ = _____

(7) $\dfrac{\overline{(\tau\alpha)}}{(\tau\alpha)_n}$ = ___

$F_R' \overline{(\tau\alpha)} = \left(\dfrac{F_R'}{F_R}\right) \left(\dfrac{\overline{(\tau\alpha)}}{(\tau\alpha)_n}\right) F_R(\tau\alpha)_n$ _____

$F_R' U_L = \left(\dfrac{F_R'}{F_R}\right) F_R U_L$ = _____

(1) Obtained from y-intercept of η vs $\dfrac{\Delta T}{I}$ curve, Table 2-6, or manufacturer's data.

(2) Obtained from absolute value of slope of η vs $\dfrac{\Delta T}{I}$ curve, Table 2-6. Units of Langleys/(°F day) are for a 6-hour sunlight day, not a 24-hour day. This must be observed when other units such as Btu/ft^2 °F hr are used.

(3) Mass flowrate of working fluid through collector, $\dot{m}$; specific heat of fluid C_p; area of collector, A_c. May use constant = 10 Btu/hr ft^2 F.

(4) Effectiveness of the collector-tank heat exchanger, if employed; if not employed, use ϵ_c = 1.0.

(5) Ratio of heat capacity flowrate of the fluid through the collector to the heat capacity flowrate which is the minimum of the two fluids in the collector-tank heat exchanger, if employed; if not employed, use ratio = 1.0.

(6) Will equal 1.0 if no collector-tank heat exchanger employed.

(7) Use constant if no better data available. Constant = 0.91 { for double glazed collector; 0.93 { for single glazed collector

WORKSHEET C-1

LOAD CALCULATIONS (5)

JOB NO _____

Heat Loss Rate (L) _____ B/ft^2 degree-day gross (from Table 3-1)
or net

Area (M) _____ ft^2

Year 19____

Month	Degree Days (P)	GROSS		NET		
		Space Heat Load R=(L)x(M)x(P)	Hot Water (U)	Space Heat Load (V)=(Rx η_w)	Hot Water (W) $Q_d \times N_o$	Total Q_L (V)+(W)
DEC						
JAN						
FEB						
MAR						
APR						
MAY						
JUN						
JUL						
AUG						
SEP						
OCT						
NOV						
	(1)	(2)	(3)	(4)	(5) $\sum_{12} Q_L = Q_{L_t}$	

(1) From local records or Climatic Atlas of U.S., U.S. Dept. Commerce. **Excerpts in Table 3-2.**

(2) Based on fuel used.

(3) From Worksheet C-2, Gross = $\frac{net}{\eta_w}$, η_w = utilization efficiency of heater. May be approximated as constant.

(4) η_w = Utilization efficiency of heater. Net space heat may be calculated from heat loss of building or from fuel usage times efficiency of heater. If "L" is net heat loss rate, then "V" = L xMxP (without η_w).

(5) Units of heat on this Worksheet are in 10^6 Btu

WORKSHEET C-2

DEMAND CALCULATIONS - DOMESTIC WATER HEATER

JOB NO. _____

Type Building _____ BR _____ Bath _____

No. of Occupants _____ Use/day-person(1) _____

Average daily demand, gallons _____ x 8.3 lbs./gal. = _____ lbs. = W

Supply temperature (winter), °F _____ (2) Average water temperature (T_i)

After heating _____ °F = Desired hot water temperature (T_o)

Q_d = daily BTU's to be collected = $W\ C_p\ \Delta T = W\ C_p\ (T_o - T_i)$

_____ lb. (1.0) _____ °F _____ B/day

Month	(2) T_i °F	(3) Q_d BTU's required one day	N_o No. of days in month	Net Monthly Average Demand $Q_d \times N_o$
DEC				
JAN				
FEB				
MAR				
APR				
MAY				
JUN				
JUL				
AUG				
SEP				
OCT				
NOV				
			$\Sigma Q_d N_o = Q_{d_t}$	

(1) Source – Table 2-9 (Section 2.3) or DM-3, Chapter 1.

(2) Ground water temperature taken as normal daily average temperature, Table 3-3 or from Climatic Atlas of US, US Department of Commerce (US NOAA, 1968)

(3) May be approximated as constant, or accuracy may be improved by using different T_i and T_o for each month.

WORKSHEET D-1

MONTHLY SOLAR COLLECTION PARAMETERS

JOB NO. _____

$F_R'(\overline{\tau\alpha})$ = _____ (from Worksheet B)

$F_R'U_L$ = _____ (from Worksheet B)

		(3)	(4)	(6)		(1)	(1,2)	(1,2,5)
Mo.	N_o (days/mo.)	I (lys/day)	S Slope Factor	Air Temp T_a (°F)	$T_{ref}-T_a$ = (212F-Ta) (°F)	Q_L (10^6B/mo.)	$F_1 = \frac{N_o F_R' (\overline{\tau\alpha}) IS(3.69)}{Q_L}$ (ft^{-2})	$F_L = \frac{F_R' U_L (T_{ref}-T_a) N_o (3.69)(4.0)}{Q_L}$ (ft^{-2})
DEC								
JAN								
FEB								
MAR								
APR								
MAY								
JUN								
JUL								
AUG								
SEP								
OCT								
NOV								

(1) Loads, Q_L, from Worksheet C-1

(2) Factor 3.69 converts langleys/day to BTU/ft^2 day.

(3) From Table 1-1 based on location _____

(4) From Figure 3-2 based on tilt angle of latitude _____ + 10° = _____

(5) Factor (4.0) converts hours of sunlight (6 hours) to hours per day (24 hours).

(6) Table 3-4 or US NOAA, 1968, Climatic Atlas of the United States.

WORKSHEET D-2

FRACTION OF LOAD SUPPLIED BY SOLAR HEAT

JOB NO. _____

Month	A_c = _____ ft^2			A_c = _____ ft^2			A_c = _____ ft^2		
	$A_c F_I$ (1)	$A_c F_L$ (1)	f (2)	$A_c F_I$	$A_c F_L$	f (2)	$A_c F_I$	$A_c F_L$	f (2)
DEC									
JAN									
FEB									
MAR									
APR									
MAY									
JUN									
JUL									
AUG									
SEP									
OCT									
NOV									
		$\bar{f} = \frac{\Sigma Q_L f}{\Sigma Q_L}$							

Note: use Q_L's from Worksheet D-1.

STORAGE SIZING:

Minimum storage size - DHW one days' usage (Worksheet C-2) V = _____ gal.

Space heat/DHW 1.8 gal/ft^2 collector (Section 2.2) V = 1.8 x A_c = _____ gal.

For non-water, see Section 3.6

Other "rules of thumb" –

DHW 1.0 - 2.5 day's usage (the latter with no auxiliary heater) V = _____ gal.

Space heat/DHW: 1.8 - 5 gal/ft^2 (see Sections 2.2, 3.6) V = _____ x A_c _____ gal.

(1) F_I and F_L from Worksheet D-1

(2) From Figure 3-1 after $A_c F_I$ and $A_c F_L$ calculated

WORKSHEET E-1

VALUE OF FUEL SAVED JOB NO._____

(1) A_c Area from Worksheet D-2 (ft^2)	(2) f Fraction Supplied by Solar	(3) Q_{L_t} from Worksheet C-1 (Btu X 10^6 per Year	(4) Value of Fuel Saved per Year (A) ($)	(5) Escalated Fuel Cost to First Year Occupancy	(6) Present Worth of 25 Years Fuel at ___%/yr Inflation Rate and ___%/yr Discount Rate (4) X (5) X (6)	(7) Present Worth of 25 Years Fuel at ___%/yr Inflation Rate No Discount (4) x (5) X (7)	(8) Present Worth of O&M Costs at ___% Discount Rate	(9) Present Worth of Net Fuel Savings (6) minus (8) or (7) minus (8)

Notes on Columns

(3) Or Q_{d_t} from Worksheet C-2 for DHW Only Systems

(4) A = Value of fuel = $\dfrac{\bar{f} \times Q_{L_t} \times C_F}{\eta_w}$

C_F = cost of fuel, $\$/10^6$ Btu

η_w = Utilization efficiency of furnace, DHW heater or compromise η_w (Worksheet A)

(5) Factors from Energy Conversion Factors Table, Section 3.7.1 - 16% = 1.16, etc.

(6) Present worth factors from Table 3-5a (10% discount) or Table 3-5c (7% discount). See Section 3.7.3.1

(7) Present worth factor from Table 3-5b (no discount) - See Section 3.7.3.2

(8) Calculated in Section 3.7.3.1

(9) Transfer to Worksheet A

COLLECTOR TEMPERATURES (See Section 3.8)

$$T_o - T_i = \frac{(f)(Q_L)(N_o)}{G\ C_p\ \theta\ A_c}$$

Where Q_L = heat load, Btu/mo, from Worksheet C-1 for month selected
N_o = number of days in month
C_p = specific heat of fluid (use 1 Btu/lbm°F for water)
θ = number of hours of usable sun in day (use 5 or 6 hours)
G = flowrate in lbm/hr-sq ft (use 10 lbm/hr-sq ft)
f = fraction supplied by solar, from Worksheet D-2 for month selected
A_c = area of solar collector

WORKSHEET E-2
PRESENT WORTH ANALYSIS

JOB NO. _____
Collector Area _____ ft^2

		A	B	C
Year_____ (Specify CY or FY)	Year of Analysis	Dollar Value of Fuel Saved in Zeroth Year (Worksheet E-1)**	Fuel Inflation Factor at____% Discount at 10% From Table 3-5a	Annual Present Worth (A x B)
	Zeroth*			
	1st			
	2nd			
	3rd			
	4th			
	5th			
	6th			
	7th			
	8th			
	9th			
	10th			
	11th			
	12th			
	13th			
	14th			
	15th			
	16th			
	17th			
	18th			
	19th			
	20th			
	21st			
	22nd			
	23rd			
	24th			
	25th			

Present worth of fuel saved by system (transfer to Worksheet A, Column Y) Σ _____

* Year for which fuel costs are available if year of construction. Otherwise, escalate fuel costs to year of construction.

** Copy zeroth year fuel saved into each space in Column A.

WORKSHEET F

SOLAR SYSTEM COST ANALYSIS

JOB NO._____

Area_____sq ft_____ sq ft

	Item Description	Space Heating/DHW	DHW Only
(1)	Collector	/sq ft	/sq ft
(2)	Storage tank, installed,_____ $_____ /gal x_____ gal/sq ft collector	/sq ft	/sq ft
(3)	Auxiliary heating unit, installed cost/sq ft collector, net of conventional unit cost	/sq ft	/sq ft
(3)	Pumps, pipe, heat exchangers, controls cost/sq ft collector	/sq ft	/sq ft
	Other (from Worksheet G)	/sq ft	/sq ft
	Subtotal	_____	_____
(1)	Collector installation	/sq ft	/sq ft
(4)	TOTAL	_____	_____

(4)

Area	Cost/sq ft	Cost

(1) Manufacturer's data, or from Table 2-6 or Table 3-7, plus 80% - 100% for installation.
(2) See Table 2-8 and Worksheet D-2, plus $.10 (antifreeze) and $1.50/sq ft (heat exchanger) if applicable.
(3) See Table 3-6.
(4) Transfer totals to Worksheet A.

WORKSHEET G

ADDITIONAL COST ITEMS RELATED TO USE OF SOLAR HEATING

JOB NO._____

COST ITEM (Capital costs this sheet)	ATTRIBUTED TO PLANNED SOLAR SYSTEM		
	Yes	No	Cost
Change or add unit heaters			
Change or add circulating pumps			
Change or add controls, e.g., to radiators, attic exhaust fan			
Increase in interior floor space to accommodate tempering or storage tanks, pumps, etc.			
Excavation and backfill, storage tank			
Elimination of excess standby boilers, furnaces, etc.			
Capital value of space obtained by eliminating boilers, etc. in above item.			
Electricity for pumps, fans - excess cost over conventional system			
Other			
Total			

Convert to $/sq ft collector:

$A_{[C]}$ = _____sq ft

Total = _____$/sq ft, transfer to Worksheet F.

Worksheet H

SOLAR AIR COLLECTOR SYSTEM DESIGN SUMMARY

JOB NO. _____

Month	Load Q_L B/mo. (from C-1)	Solar q_c B/mo. ft^2 (see Sec. 3.12)	(1) Area · ft^2 $= \frac{Q_L}{q_c}$	(3) USEFUL HEAT PRODUCED $Q_u = A_c q_c$ B/mo. $A_c =$ ___	(2) USEFUL HEAT PRODUCED $Q_u = A_c q_c$ B/mo. $A_c =$ ___	(2) USEFUL HEAT PRODUCED $Q_u = A_c q_c$ B/mo $A_c =$ ___
DEC						
JAN						
FEB						
MAR						
APR						
MAY						
JUN						
JUL						
AUG						
SEP						
OCT						
NOV						
Total Year			Totals/yr.			
			$\bar{f} = (\Sigma Q_u)/Q_{L_t}$			
				(3)	(3)	(3)

(1) Area $= \frac{Q_L}{q_c}$ where Q_L = heating load; q_c = solar heat collected/ft^2 collector.

(2) Subsequent columns of useful heat produced by lesser areas are provided to allow determination of value of lesser areas, if maximum cannot be justified.

*(3) In assigning values of useful heat, to the right of the double line, no more can be credited to the system for heat saving than the load can use. Enter the lesser of the two values, required or collected, for a given area. When Q_L is entered, identify the value with an asterisk (*).

4.0 EXAMPLE PROBLEMS

See Section 3 for instructions on preparing Worksheets.

4.1 Discussion of example 1. Space and Water Heating System for Family Housing (see Section 4.1.1). Preliminary job data are entered on Worksheet A. The first step in the analysis (Worksheet B) is to determine the y-intercept and slope of the collector efficiency curve. A single glazed, all copper collector with selective coating was chosen. The y-intercept and slope were taken directly from Table 2-6, Collector #91. They are 0.77 and 1.059 Btu/hr-ft^2-deg. F, respectively. Note absolute value of slope used. Next, the . recommended figure of 10 Btu/hr-ft^2- deg. F is selected for $(mC_p)_c/A_c$, line 3, Worksheet B. Since there will be no heat exchanger between collector and tank fluids, the next three factors equal 1.0. Line 7, Worksheet B is equal to 0.91 for a single glazed collector. The . $\overline{\qquad\qquad}$. F_R ([tau[alpha]) and $F_R U_L$ are calculated and transferred to Worksheet D-1.

The next step is to determine the heat load or demand. This is usually done by conventional methods of estimating heat losses from buildings and water usage per occupant. Table 3-1 provides estimates of building heat loss rates and other sources for calculating this parameter are given in Section 3.3. In example 1, Worksheet C-1, the fuel usage was calculated using the Btu/ft^2 degree-day (dd) method. First a rough estimate for the average family house at Port Hueneme was obtained from 1 month's usage of gas for all housing divided by the number of degree days in the month and the total number of square feet in the housing area. This figure (Q_L = 29 Btu/ft^2-dd) included hot water heating. The estimated hot water use for a 3-bedroom 2-bath home gave a figure for hot water use per square foot which was then subtracted from total use for the 1,500 sq ft home. Resulting figure gave space heating fuel use as 21.5 Btu/ft^2-dd. This gross figure was multiplied by furnace efficiency of 0.7 to get 15.0 Btu/ft^2-dd net. Net heat is that which must be supplied by solar heat. Gross heat represents the heat value of fuel used by a conventional system. Heating degree days in Worksheet C-1 are from Table 3-2 for Los Angeles.

Worksheet C-2 is used to calculate DHW use. Water usage is determined from Table 2-9, Section 2.3 or other. For Example 1, water usage of 30 gal/day/person was chosen (from Section 2.3) and water main temperatures from Table 3-3, Los Angeles, were used. Worksheets C-1 and C-2 can now be completed. The DHW demand from Worksheet C-2 is transferred to Worksheet C-1 and the Q_L from Worksheet C-1 is transferred to Worksheet D-1. The DHW demand could have been approximated as a constant at the highest use for conservative design, but the calculations are made in Worksheet C-2 for illustrative purposes.

To complete Worksheet D-1, select from Table 1-1 the nearest or most meteorologically similar located (same latitude and degree of cloudiness). Enter insolation in Btu/ft^2-day and slope factors from Figure 3-2 for the appropriate latitude. Air temperature, T_a, is obtained from Table 3-4. For this example, Los Angeles was selected as the nearest similar location (latitude = 34 deg.) and the slope factor was based on latitude of 32 deg. plus 15 deg. to emphasize winter heating (Section 1.3.3).

Worksheet D-2 is begun by selecting collector area of 200 sq ft as an arbitrary size. Then 200 sq ft was multiplied by $F_{[I]}$ and $F_{[L]}$ from Worksheet D-1. For each pair _ of points $A_{[C]}F_{[I]}$ and $A_{[C]}F_{[L]}$, Figure 3-1 is entered to find f. When f, Worksheet D-2, average yearly load carried by solar heating, is calculated, a result of 0.646 is obtained. $Q_{[L]}$ and [SIGMA]$Q_{[L]}$ are from Worksheet C-1. Another area of 300 sq ft is selected and found to provide 0.794 of the load. A smaller area could have been evaluated to provide the DHW load only. This information is transferred to Worksheet E-1. Storage is selected on the basis of guidelines given in Section 2.2 (1.8 gal/$ft^{[2]}$) to give 360 gal and 540 gal for the two collector areas investigated.

Use Worksheet E-1 to determine value of fuel saved. The present worth is calculated from column (6) or (7) of Worksheet E-1 (see Section 3.7.3 for explanation of which to use). For this example, the no discount method, natural gas fuel, and appropriate inflation factors (Table 3-5b) are used. O&M costs are set equal to zero. Therefore columns (6) and (8) of Worksheet E-1 are not used. Worksheet E-2 is not used because the single present worth factor is used as explained in Section 3.7.3.2. Assume project starts in FY 83. The factor 1.14 escalates the fuel saved from FY 83 to FY 84 at 14% per year (per Section 3.7.1). That leaves 24 years at 8% inflation for which the present worth factor is 72.106 (from Table 3-5b). Column (7) of Worksheet E-1 can now be calculated as 147.13 x 1.14 x 72.106 for 200 sq ft.

Fluid temperature rise through the collector is calculated on Worksheet E-1 for a selected month. Calculation may be repeated for each month desired. For the month of December and 200 sq ft collector area, f is 0.53, $Q_{[L]}$ is 8.72 x $10^{[6]}$ Btu/mo, G is 10 lb/hr $ft^{[2]}$. Using the formula on Worksheet E-1, a temperature rise of 12.4 deg. F is found. This is the order of magnitude temperature rise most desired. Note that, using the same formula, the [DELTA]T could be fixed at, say 10 deg. F, and a flowrate, G, calculated. Sizing of pump, pipe, and collector tube diameters for low pressure drop is based on flowrate G (see Section 2.9).

Worksheet F may be used to calculate total installed solar system cost/sq ft, or, the manufacturer's price for complete systems, installed, based on per square foot of collector area, may be used. On Worksheet F, collector cost may be obtained from Table 3-7, Table 2-6, or manufacturer's quote may be used. Tank volume is based on 1.8 gal/$ft^{[2]}$ collector for space heating/DHW. The installed price of the insulated tank was taken from Table 2-8 (here $3.50/gal). Up to 5 gal/$ft^{[2]}$ may be specified for space heating/DHW. DHW-only storage may equal one or more days expected consumption. Other costs may be priced from a detailed design or figures from Table 3-6 may be used. Other costs listed on Worksheet G are neglected for this example for simplicity.

Worksheet A may now be filled in with the values from the various worksheets. When this is done the solar system using 200 sq ft of collector is found to be cost effective in that it saves more in fuel than it costs to install. The 300 sq ft system is less cost effective. This fact may also be seen from Worksheet D-2 for the 300 sq ft system. _ There are 4 months where the fraction of load supplied by solar, f, is equal to 1.0 and some of the other months are close to 1.0. Much of this system is not being utilized; that is, it does not result in fuel savings for those months when more solar energy is available than can be used.

The next step, for this example, would be to evaluate a 250 sq ft system to see if it is more or less cost effective than the 200 sq ft system. Also a given system can usually be made more cost effective by installing insulation to reduce the building heat loss rate. This should always be considered. A graph of SIR vs collector area would pinpoint the optimum SIR and collector area.

4.1.1 Example 1 - worksheets.

WORKSHEET A

Job Summary

Date Nov 1979 Job Number Example 1

Building Family Quarters General Construction Stucco

Location Port Hueneme, California

Occupancy Family of Four Hours of Occupancy

Type of Solar System Space and DHW

Building Area 1,467 sq ft No. BR 3 No. Baths 2

Fuel Gas Burned in Heater @ 70 % assumed @ Cost $2.30 /10^{6} Btu
efficiency

@ % /10^{6} Btu

@ % /10^{6} Btu

Solar Collector Description: Single glazed glass, Copper absorber,
Selective coating

Approx. Cost, installed, total system $ /sq ft DHW
(Worksheet F)

$ 40.10 /sq ft Space Heating/DHW

(1) Area (From E-1)	_ f (From E-1)	(x) Solar System Cost (From F)	(y) Value of 25 year Fuel Saved (From E-1 - column (9) Or E-2)	Savings/ Investment Ratio (y)/(x)	Payback Period (NAVFAC Manual P-442)
200	.646	8,020	12,094	1.51	- 18 years
300	.794	12,030	14,865	1.24	- 22 years

WORKSHEET B

SOLAR COLLECTOR PARAMETERS

JOB NO. Example 1

(1) $F_R(\tau\alpha)_n$ = 0.77

(2) $F_R U_L$ = 1.059 Btu/Hr-Ft^2°F

(3) $(\dot{m}C_p)_c/A_c$ = 10 Btu/ft^2 F hr

(4) ϵ_c = 1.0

(5) $\dfrac{(\dot{m}C_p)_c}{(\dot{m}C_p)_{min}}$ = 1.0

(6) $\dfrac{F_R'}{F_R} = \left\{ 1 + \left[F_R U_L \left(\dfrac{A_c}{(\dot{m}C_p)_c} \right) \right] \left[\dfrac{(\dot{m}C_p)_c}{\epsilon_c (\dot{m}C_p)_{min}} - 1 \right] \right\}^{-1}$ = 1.0

(7) $\dfrac{\overline{(\tau\alpha)}}{(\tau\alpha)_n}$ = ___

$F_R' \overline{(\tau\alpha)} = \left(\dfrac{F_R'}{F_R}\right) \left(\dfrac{\overline{(\tau\alpha)}}{(\tau\alpha)_n}\right) F_R(\tau\alpha)_n$ 0.701

$F_R' U_L = \left(\dfrac{F_R'}{F_R}\right) F_R U_L$ = 1.059

(1) Obtained from y-intercept of η vs $\dfrac{\Delta T}{I}$ curve, Table 2-6, or manufacturer's data.

(2) Obtained from absolute value of slope of η vs $\dfrac{\Delta T}{I}$ curve, Table 2-6.

(3) Mass flowrate of working fluid through collector, $\dot{m}$; specific heat of fluid C_p; area of collector, A_c. May use constant = 10 Btu/hr ft^2 F.

(4) Effectiveness of the collector-tank heat exchanger, if employed; if not employed, use ϵ_c = 1.0.

(5) Ratio of heat capacity flowrate of the fluid through the collector to the heat capacity flowrate which is the minimum of the two fluids in the collector-tank heat exchanger, if employed; if not employed, use ratio = 1.0.

(6) Will equal 1.0 if no collector-tank heat exchanger employed.

(7) Use constant if no better data available. Constant = 0.91 { for double glazed collector; 0.93 { for single glazed collector

LOAD CALCULATIONS (5)

JOB NO Example 1

Heat Loss Rate (L) 15.0 B/ft^2 degree-day gross (from Table 3-1) or net

Area (M) 1467 ft^2

Year 1979

Month	Degree Days (P)	GROSS		NET		
		Space Heat Load R=(L)x(M)x(P)	Hot Water (U)	Space Heat Load (V)=(Rx η_w)	Hot Water (W) $Q_d \times N_o$	Total $Q_L = (V)+(W)$
DEC	291			6.40	2.32	8.72
JAN	372			8.19	2.47	10.66
FEB	302			6.65	2.23	8.88
MAR	288			6.34	2.35	8.69
APR	219			4.82	2.00	6.82
MAY	158			3.48	1.91	5.39
JUN	81			1.78	1.70	3.48
JUL	28			0.62	1.73	2.35
AUG	22			0.48	1.67	2.15
SEP	42			0.92	1.64	2.56
OCT	78			1.72	1.88	3.60
NOV	180			3.96	2.06	6.02
	(1)	(2)	(3)	(4)	(5)	
					$\sum_{12} Q_L = Q_{L_T}$	69.32

(1) From local records or Data Manual, Solar Energy Research Institute (1980).

(2) Based on fuel used.

(3) From Worksheet C-2, Gross = $\frac{\text{net}}{\eta_w}$. η_w = utilization efficiency of heater. May be approximated as constant.

(4) η_w = Utilization efficiency of heater. Net space heat may be calculated from heat loss of building or from fuel usage times efficiency of heater. If "L" is net heat loss rate, then "V" = LxMxP (without η_w).

(5) Units of heat on this Worksheet are in 10^6 Btu

DEMAND CALCULATIONS DOMESTIC WATER HEATER

JOB NO. Example 1

Type Building Quarters BR 3 Bath 2

No. of Occupants 4 Use/day-person(1) 30

Average daily demand, gallons 120 x 8.3 lbs./gal. = 996 lbs. = W

Supply temperature (winter), °F see below (2) Average water temperature (T_i)

After heating 130 °F = Desired hot water temperature (T_o)

Q_d = daily BTU's to be collected = $W\ C_p\ \Delta T = W\ C_p\ (T_o - T_i)$

For Jan. 996 lb. (1.0) (130 - 55) °F 0.75×10^5 B/day

Month	(2) T_i °F	(3) Q_d BTU's required one day	N_o No. of days in month	Net Monthly Average Demand $Q_d \times N_o$
DEC	55	0.75×10^5	31	2.32×10^6
JAN	50	0.80×10^5	31	2.47×10^6
FEB	50	0.80×10^5	28	2.23×10^6
MAR	54	0.76×10^5	31	2.35×10^6
APR	63	0.67×10^5	30	2.00×10^6
MAY	68	0.62×10^5	31	1.91×10^6
JUN	73	0.57×10^5	30	1.70×10^6
JUL	74	0.56×10^5	31	1.73×10^6
AUG	76	0.54×10^5	31	1.67×10^6
SEP	75	0.55×10^5	30	1.64×10^6
OCT	69	0.61×10^5	31	1.88×10^6
NOV	61	0.69×10^5	30	2.06×10^6
			$\Sigma Q_d N_o = Q_{d_1}$	23.96×10^6

(1) Source – Table 2-9 (Section 2.3) or DM-3, Chapter 1.

(2) Ground water temperature taken as normal daily average temperature, Table 3-3 or from Climatic Atlas of US, US Department of Commerce (US NOAA, 1968)

(3) May be approximated as constant, or accuracy may be improved by using different T_i and T_o for each month.

WORKSHEET D-1

MONTHLY SOLAR COLLECTION PARAMETERS

JOB NO. Example 1

$F_R'(\overline{\tau\alpha})$ = 0.701 (from Worksheet B)

$F_R' U_L$ = 1.059 (from Worksheet B)

Mo.	N_o (days/mo.)	(3) I $\frac{BTU}{Ft^2 \cdot DAY}$	(4) S Slope Factor	(5) Air Temp T_a (°F)	$T_{ref}-T_a$ = (212F-Ta) (°F)	(1) Q_L (10^6B/mo.)	(1) $F_1 = \frac{N_o F_R' (\overline{\tau\alpha}) IS}{Q_L}$ (ft^{-2})	(1,2) $F_L = \frac{F_R' U_L (T_{ref}-T_a) N_o \ (24)}{Q_L}$ (ft^{-2})
DEC	31	848	1.89	57	155	8.72	.0040	.0140
JAN	31	926	1.69	55	157	10.66	.0032	.0116
FEB	28	1214	1.45	56	156	8.88	.0039	.0125
MAR	31	1619	1.13	57	155	8.69	.0046	.0141
APR	30	1951	0.89	59	153	6.82	.0054	.0171
MAY	31	2060	0.59	62	150	5.39	.0049	.0219
JUN	30	2119	0.55	64	148	3.48	.0070	.0324
JUL	31	2308	0.58	68	144	2.35	.0124	.0483
AUG	31	2079	0.88	70	142	2.15	.0185	.0520
SEP	30	1681	1.12	69	143	2.56	.0155	.0426
OCT	31	1317	1.54	65	147	3.60	.0122	.0322
NOV	30	1004	1.68	60	152	6.02	.0059	.0192

(1) Loads, Q_L, from Worksheet C-1.

(2) Factor 24 converts Days to Hours.

(3) From Table 1-1 based on location: Los Angeles .

(4) From Figure 3-2 based on tilt angle of latitude 32° + 15° = 47°.

(5) Table 3-4 or Data Manual, Solar Energy Research Institute (1980).

WORKSHEET D-2

FRACTION OF LOAD SUPPLIED BY SOLAR HEAT

JOB NO. Example 1

Month	A_c = 200 ft^2			A_c = 300 ft^2			A_c = ____ ft^2		
	$A_c F_I$ (1)	$A_c F_L$ (1)	f (2)	$A_c F_I$	$A_c F_L$	f (2)	$A_c F_I$	$A_c F_L$	f (2)
DEC	.80	2.80	.53	1.20	4.20	.71			
JAN	.64	2.32	.45	0.96	3.48	.60			
FEB	.78	2.50	.53	1.17	3.75	.72			
MAR	.91	2.81	.62	1.37	4.22	.80			
APR	1.07	3.42	.68	1.61	5.13	.87			
MAY	.98	4.38	.57	1.47	6.58	.75			
JUN	1.41	6.49	.72	2.11	9.73	.88			
JUL	2.46	9.66	1.0	3.71	14.48	1.0			
AUG	3.70	10.41	1.0	5.55	15.6	1.0			
SEP	3.09	8.52	1.0	4.64	12.8	1.0			
OCT	2.45	6.43	1.0	3.67	9.65	1.0			
NOV	1.18	3.85	.73	1.77	5.78	.90			
		$\bar{f} = \frac{\Sigma Q_L f}{\Sigma Q_L}$	.646			.794			

Note: use Q_L's from Worksheet D-1.

STORAGE SIZING:

Minimum storage size - DHW one days' usage (Worksheet C-2) V = _____ gal.

Space heat/DHW 1.8 gal/ft^2 collector (Section 2.2) V = 1.8 x A_c = 360 gal. (200 Ft^2)

For non-water, see Section 3.6 540 gal. (300 Ft^2)

Other "rules of thumb" –

DHW 1.0 - 2.5 day's usage (the latter with no auxiliary heater) V = _____ gal.

Space heat/DHW: 1.8 - 5 gal/ft^2 (see Sections 2.2, 3.6) V = _____ x A_c _____ gal.

(1) F_I and F_L from Worksheet D-1

(2) From Figure 3-1 after $A_c F_I$ and $A_c F_L$ calculated

WORKSHEET E-1

VALUE OF FUEL SAVED JOB NO. Example 1

(1) A_c Area from Worksheet D-2 (ft^2)	(2) f Fraction Supplied by Solar	(3) Q_{L_t} from Worksheet C-1 (Btu X 10^6 per Year	(4) Value of Fuel Saved per Year (A) ($)	(5) Escalated Fuel Cost to First Year Occupancy	(6) Present Worth of 25 Years Fuel at ___%/yr Inflation Rate and ___%/yr Discount Rate (4) X (5) X (6)	(7) Present Worth of 25 Years Fuel at ___%/yr Inflation Rate No Discount (4) x (5) X (7)	(8) Present Worth of O&M Costs at ___% Discount Rate	(9) Present Worth of Net Fuel Savings (6) minus (8) or (7) minus (8)
200	.646	69.32	147.13	1.14	N/A	12,094	N/A	12,094
300	.794	69.32	180.84	1.14	N/A	14,865	N/A	14,865

Notes on Columns

(3) Or Q_{d_t} from Worksheet C-2 for DHW Only Systems

(4) A = Value of fuel = $\dfrac{\bar{f} \times Q_{L_t} \times C_F}{\eta_w}$

C_F = cost of fuel, $\$/10^6$ Btu

η_w = Utilization efficiency of furnace, DHW heater or compromise η_w (Worksheet A)

(5) Factors from Energy Conversion Factors Table, Section 3.7.1 - 16% = 1.16, etc.

(6) Present worth factors from Table 3-5a (10% discount) or Table 3-5c (7% discount). See Section 3.7.3.1

(7) Present worth factor from Table 3-5b (no discount) - See Section 3.7.3.2

(8) Calculated in Section 3.7.3.1

(9) Transfer to Worksheet A

COLLECTOR TEMPERATURES (See Section 3.8)

$$T_o - T_i = \frac{(f)(Q_L)(N_o)}{G\ C_p\ \theta\ A_c} = \frac{(0.53)\ (8.72 \times 10^6)\ 31}{(10\ \text{lbm/hr-ft}^2)(1\ \text{Btu/lbm°F})(6\ \text{hr})(200\ \text{ft}^2)} = 12.4°F$$

Where Q_L = heat load, Btu/mo, from Worksheet C-1 for month selected
N_o = number of days in month
C_p = specific heat of fluid (use 1 Btu/lbm°F for water)
θ = number of hours of usable sun in day (use 5 or 6 hours)
G = flowrate in lbm/hr-sq ft (use 10 lbm/hr-sq ft)
f = fraction supplied by solar, from Worksheet D-2 for month selected

WORKSHEET E-2
PRESENT WORTH ANALYSIS

JOB NO. _____
Collector Area _____ ft^2

		A	B	C
Year_____ (Specify CY or FY)	Year of Analysis	Dollar Value of Fuel Saved in Zeroth Year (Worksheet E-1)**	Fuel Inflation Factor at ____% Discount at 10% From Table 3-5a	Annual Present Worth (A x B)
	Zeroth*			
	1st			
	2nd			
	3rd			
	4th			
	5th			
	6th			
	7th			
	8th			
	9th			
	10th			
	11th			
	12th			
	13th			
	14th			
	15th			
	16th			
	17th			
	18th			
	19th			
	20th			
	21st			
	22nd			
	23rd			
	24th			
	25th			

Present worth of fuel saved by system (transfer to Worksheet A, Column Y) Σ _____

* Year for which fuel costs are available if year of construction. Otherwise, escalate fuel costs to year of construction.

** Copy zeroth year fuel saved into each space in Column A.

WORKSHEET F

SOLAR SYSTEM COST ANALYSIS

JOB NO. Example 1

	Item Description	Area 200 sq ft Space Heating/DHW	Area 300 sq ft* DHW Only
(1)	Collector	13.65/sq ft	13.65/sq ft
(2)	Storage tank, installed,_____ $_____ /gal x_____ gal/sq ft collector	6.30/sq ft	6.30/sq ft
(3)	Auxiliary heating unit, installed cost/sq ft collector, net of conventional unit cost	2.25/sq ft	2.25/sq ft
(3)	Pumps, pipe, heat exchangers, controls cost/sq ft collector	4.25/sq ft	4.25/sq ft
	Other (from Worksheet G)	0 /sq ft	0 /sq ft
	Subtotal	26.45	26.45
(1)	Collector installation	13.45/sq ft	13.65/sq ft
(4)	TOTAL	$40.10/sq ft	40.10/sq ft

(4)

Area	Cost/sq ft	Cost
200	$40.10/sq ft	$ 8,020
300	40.10/sq ft	$12,030

(1) Manufacturer's data, or from Table 2-6 or Table 3-7, plus 80% - 100% for installation.
(2) See Table 2-8 and Worksheet D-2, plus $.10 (antifreeze) and $1.50/sq ft (heat exchanger) if applicable.
(3) See Table 3-6.
(4) Transfer totals to Worksheet A.

* Includes space heating for this example

5.0 DIRECTORY OF SOLAR EQUIPMENT MANUFACTURERS

5.1 Manufacturers' directories.

SOLAR ENERGY SOURCEBOOK ... C. W. Martz (ed); Solar Energy Institute of America, Box 9352, Washington, DC 20005, 1977, 712 pp, $12.00 (free to members).

Organized compilation of solar energy related products and services in the form of a loose leaf binder; continual updates provided to members.

SOLAR INDUSTRY INDEX ... Solar Energy Industries Association, 1001 Connecticut Ave., N.W., Washington, DC 20036, 1977, 381 pp, $8.00.

Comprehensive guide to manufacturers and services organizations; updated annually.

SOLAR PRODUCTS SPECIFICATION GUIDE ... Solar Age Magazine, Church Hill, Harrisville, NH 03450.

A comprehensive list of manufacturers and services for solar components. Published annually and updated.

5.2 Manufacturers of flat plate collectors and other solar hot water equipment.

The Civil Engineering Laboratory does not endorse or recommend the quality or capability of any individual company. Local telephone directories can be checked. The National Solar Heating and Cooling Information Center often can provide names of companies. Their number id (800) 523-2929, toll free. The listing of Collector Test Data, Table 2-6, is a good source of Solar Companies.

6.0 REFERENCES (*) AND SELECT BIBLIOGRAPHY

*AIA Research Corp. A Survey of Passive Solar Buildings. San Mateo, CA: Solar Energy Information Services, 1979.

American Society of Heating, Refrigerating, and Air-Conditioning Engineers Handbook - 1978 Applications. Chap 58 - Solar Energy Utilization for Heating and Cooling. New York: ASHRAE, 1978.

American Society of Heating, Refrigerating, and Air-Conditioning Engineers Handbook - 1977 Fundamentals. Chap 26 - Fenestration. New York: ASHRAE, 1978.

*Anderson, B. Solar Home Book. Harrisville, NH: Cheshire Books, 1976.

Anderson, L.B., Hottel, H.C., and Whillier, A. Solar Energy Research No. 47. Madison, WI: University of Wisconsin, 1955.

*Anderson, H. "Accolade at Honeywell Plaza." Solar Age, Vol 4, No. 6 (June 1979), pp 32-36.

Andrews, J.W. and Wilhelm, W. Low Cost Site Assembled Solar Collector Designs for Use with Heat Pumps. Brookhaven National Laboratory, Report No. BNL 50671. Upton, NY: May 1977.

Antolini, H.L. et al. Sunset Homeowner's Guide to Solar Heating. Menlo Park, CA: Lane Publishing Co., 1978.

Argonne National Laboratory. ANL-79-15 Design and Installation Manual for Thermal Energy Storage. Argonne, IL: 1980.

*Bainbridge, D.A. Natural Cooling in California. Proceedings, 1978 Annual Meeting of the American Section, International Solar Energy Society, Denver, Colo., Aug 28-31, 1978. Newark, DE: International Solar Energy Society, vol 2.1 (1978), pp 475-487.

Balcomb, D., et al. Solar Heating Handbook for Los Alamos. Los Alamos Scientific Laboratory, Report No. LA-5967. Los Alamos, NM: May 1975.

*Balcomb, J.D. "Rules of thumb for passive solar heating in New Mexico." New Mexico Solar Energy Association Bulletin, Vol 2, Nos. 5, 6, and 7 (undated), Los Alamos Scientific Laboratories.

Balcomb, J.D., Hedstrom, J.C., and Rogers, B.T. Design Considerations of Air Cooled Collector/Rock-bin Storage Solar Heating Systems. International Solar Energy Conference and Exposition, Los Angeles, Calif., Jul 28-Aug 1. 1975 Rockville, MD: International Solar Energy Society, 1975, pp 314-315.

*Barber, R.E. Design and Test of a Prototype 3-ton Solar Heated Rankine Cycle Air Conditioner. 1975 International Solar Energy Congress and Exposition, Los Angeles, Calif., Jul 28-Aug 1, 1975. Rockville, MD: International Solar Energy Society, 1975, pp 405-406.

*Barnaby, C.W., et al. Solar for Your Present Home. Prepared for the California Energy Commission. Berkeley, CA: Berkeley Solar Group, 1977.

Beard, J.T. et al. Performance and Analysis of 'Solaris' Water-trickle Solar Collector. Sharing the Sun: Solar Technology in the Seventies, Joint Conference of the International Solar Energy Society, American Section and Solar Energy Society of Canada, Inc., Winnipeg, Manitoba, Aug 15-20, 1976. Cape Canaveral, FL: International Solar Energy Society, American Section, Vol 2 (1976), pp 46-63.

*Beck, E.J. and Field, R.L. Solar Heating of Buildings and Domestic Hot Water. Civil Engineering Laboratory, Report R-835, Port Hueneme, CA: Nov 1977. (ADA054601)

*Beckman, W.A. "Problems of Solar Cooling Systems." Sunworld, No. 6 (Nov 1977), pp 2-6.

*Beckman, W.A., Klein, S.A., and Duffie, J.A. Solar Heating Design by the F-chart Method. New York: Wiley-Interscience, 1977.

Braden, S. Graphic Standards of Solar Energy. Boston, HA: CBI Publishing Co., 1977.

Cole-Appel, B.E. and Haberstroh, R.D. Performance of Air-cooled Flat-plate Collectors. Sharing the Sun: Solar Technology in the Seventies, Vol 3 (1976), pp 116-117.

*Cole, R.L., et al. Design and Installation Manual for Thermal Energy Storage. Argonne National Laboratory, Report No. ANL-79-15. Argonne, IL: Feb 1979.

Consroe, T., et al. Alternate Strategies for Optimizing Energy Supply, Distribution, and Consumption Systems on Naval Bases, Vol 2. Advanced energy conservation strategies. Civil Engineering Laboratory, Contract Report CR 74.007. Port Hueneme, CA: Jan 1974. (AD786757, Vol 1 published as CEL CR 74.006, Nov 1973, AD777471).

De Winter, F. Fin Effectiveness or Efficiency in Flat Plate Solar Collectors. New York: Copper Development Association, 1973.

*Duffie, J.A. and Beckman, W.A. Solar energy thermal processes. New York: Wiley-Interscience, 1974.

Duffie, J.A., Beckman, W.A., and Dekken, J.G. "Solar Heating in North America." Mechanical Engineering, Vol 99, No. 11 (Nov 1977).

Duffie, J.A., Chung, R., and Lof, G.O.G. "A Study of a Solar Air Conditioner." Mechanical Engineering, Vol 85, No. 8 (Aug 1963), pp 31-35.

*Durlak, E.R. (1979a). Analysis of Solar Collectors. Type: Double Glazed Glass Cover with Aluminum Absorber Plate, Copper Waterways, Flat Black Coating. Civil Engineering Laboratory, Technical Memorandum M63-79-16. Port Hueneme, CA: Jul 1979.

*Durlak, E.R. (1979b). Computer Programs that Simulate Solar System Performance. Civil Engineering Laboratory, Techdata Sheet 79-06. Port Hueneme, CA: Apr 1979.

*Durlak, E.R. and Beccue, P. Comparison of Thermosyphon and Hermostatically Controlled Solar Domestic Hot Water Systems. Naval Civil Engineering Laboratory, Technical Memorandum M63-82-10. Port Hueneme, CA: Sept 1982.

*Durlak, E.R. On-site Evaluation of Solar Systems at Navy Bases. A Summary of Lessons Learned and Maintenance Procedures. Naval Civil Engineering Laboratory, Technical Memorandum M63-83-22. Port Hueneme, CA: Sept 1983

Edwards, D.K. Solar Collector Design. Philadelphia, PA: Franklin Institute Press, 1977.

Edwards, D.K., et al. Basic Studies on the Use and Control of Solar Energy. Engineering Report no. UCLA 60-93. Los Angeles, CA: University of California, Oct 1960.

Energy Research and Development Administration. ERDA Facilities Solar Design Handbook. Prepared by Los Alamos Scientific Laboratory, Group WX-4. Washington, DC: Aug 1977.

Energy Research and Development Administration, San Francisco Operations Office Pacific Regional Solar Heating Handbook. 2nd ed. Washington, DC: Government Printing Office, Nov 1976.

*Eyre, P.E. Corrosion in Solar Systems. Report done on CEL Contract Nos. N62583/77 MR 861 and N62583/77 MR 881. Port Hueneme, CA: Dec 1978.

Federal Energy Administration. Buying Solar. Report No. FEA/G-76/154, Washington, DC: Jun 1976. (PB 262134)

Florida Solar Energy Center. Summary Test Results FSEC Certified Solar Collectors. Cape Canaveral, FL: Feb 1979.

Foster, W.M. "Design Options for Residential Solar Hot Water Heating Systems." Solar Engineering, Oct 1977, pp 30-32.

Garg, H.P. "Effect of Dirt on Transparent Covers in Flat Plate Solar Energy Collectors." Solar Energy, Vol 15, No. 4 (Apr 1974), pp 299-302.

Gupta, G.L. and Garg, H.P. "System Design in Solar Water hHaters with Natural Circulation." Solar Energy, Vol 12 (1968), pp 163-182.

Hill, J.E. and Kusada, T. Method of Testing for Rating Solar Collectors Based on Thermal Performance. National Bureau of Standards, Report no. NBSIR 74-635, Washington, D.C. 1974.

Hottel, H.C., and Woertz, B.B. "The Performance of Flatplate Collectors." Transactions of American Society of Mechanical Engineers, Vol 64, No. 2, Solar-Heat (Feb 1942), pp 91-104.

Joncich, D., et al. Design of Solar Heating and Cooling Systems. Construction Engineering Research Laboratory, Technical Report E-139. Champaign, IL: Oct 1978.

Kimbell, B.W. Recommendation of Preferred Solar Heating System combinations. Report done on CEL Contract Nos. N62583/77 MR 861 and N62583/77 MR 881. Port Hueneme, CA: Dec 1978.

Kirts, R.E. Technical and Economic Evaluation of Four Solar Assisted Heat Pump Systems. Civil Engineering Laboratory, Technical Memorandum M63-78-6. Port Hueneme, CA: Aug 1978.

*Klein, S.A., Beckman, W.A., and Duffie, J.A. "A Design Procedure for Solar Heating Systems." Solar Energy, Vol 18, No. 2 (1976), pp 113-127.

*Klein, S.A., Beckman, W.A., and Duffie, J.A. "A Design Procedure for Solar Air Heating Systems." Solar Energy, Vol 19, No. 5 (1977), pp 509-512.

*Kohler, J. "Rules of Thumb for Sizing Storage." Solar Age, Vol 3, No. 4 (1978).

Kreider, J.J. and Kreith, F. Solar Heating and Cooling: Engineering. Practical Design, and Economics. Revised 1st Ed. New York: McGraw-Hill, 1975.

Kreider & Kreith. Principles of Solar Engineering. New York: McGraw-Hill, 1978.

Liu, B.H.Y. and Jordan, R.C. "A Rational Procedure for Predicting the Long-term Average Performance of Flat-plate Solar Energy Collectors." Solar Energy, Vol 7, No. 2 (Apr-Jun 1963), pp 53-74.

*Lof, G.O.G. Systems for Space Heating with Solar Energy. Applications of Solar Energy for Heating and Cooling of Buildings, ed. by R.C. Jordan and B.Y.H. Liu. New York: American Society of Heating, Refrigerating, and Air-Conditioning Engineers, XII (1977), 19 pp.

Lof, G.O.G. and Nevens, T.D "Heating of air by solar energy." Ohio Journal of Science, Vol 53 (1953), pp 272-280.

Lof, G.O.G. and Tybout, R.A. "Cost of House Heating with Solar Energy." Solar Energy, Vol 14, No. 3 (Feb 1973), pp 253-255.

Lof, G.O.G. and Karaki, S., and Smith, C.C. Comparative Performance of Solar Heating with Air and Liquid Systems. Sharing the Sun: Solar Technology in the Seventies, Vol 3 (1976), pp 106-117.

*Mazria, E. Passive Solar Energy Book. Emmaus, PA: 1979.

*McCullagh, J.C. Solar Greenhouse Book. Emmaus, PA: 1978.

McGarity, A.E. Solar Heating and Cooling: An Economic Assessment. Washington, DC: National Science Foundation, 1977.

*Merriam, R. Solar Air Conditioning Study. Civil Engineering Laboratory, Contract Report CR 77.C18. Port Hueneme, CA: Apr 1977. (ADA043951)

*Montgomery, R.H. Solar Decision Book: Your Guide to Making an investment. Midland, MI: Dow Corning Corp., 1978.

*National Aeronautics and Space Administration. Harnessing the Sun's Energy for Heating and Cooling. George C. Marshall Space Flight Center, AL: 1974.

National Solar Heating and Cooling Information Center. Solar Hot Water and Your Home. Rockville, MD: Aug 1979. (HUD-PDR-466)

*Naval Civil Engineering Laboratory. Passive Solar Procedures for Naval Installations. Contract Report CR 83.040. October 1983

National Roofing Contractors Association. Roofing Manual.

Obrecht, M.F. and Myers, J.R. "Performance and Selection of Materials for Potable Hot Water Service." Heating, Piping, and Air Conditioning, Vol 45 (Aug 1973). (Also in: Materials Protection and Performance, Vol 12, No. 4 (Apr 1973), pp 17-24)

Office of Technology Assessment. Application of Solar Technology to Today's Energy Needs. 2 Volumes. Washington, DC: Jun 1978.

Pesko, C., ed. Solar Directory. Ann Arbor, HI: Ann Arbor Science Publishers, 1975.

Pickering, E.E. Residential Hot Water Solar Energy Storage. Proceedings of the Workshop on Solar Energy Storage Subsystems for Heating and Cooling of Buildings, Charlottesville, Va., Apr 16-18, 1975, ed. by L.U. Lilleleht. Washington, DC: National Science Foundation, 1975.

Rho-Sigma. (Brochure), 11922 Valerio Street, North Hollywood, CA. Undated.

Scholten, W. and Curran, H. "Active Cooling Update." Solar Age, Vol 4, No. 6 (Jun 1979), pp 37-41.

Selcuk, K. "Thermal and Economic Analysis of the Overlapped Glass Plate Solar Air Heater." Solar Energy, Vol 13 (1971). pp 165-191.

Sharp, M.K. and Loehrke, R.I. Stratified Thermal Storage in Residential Solar Energy Applications. Report done on CEL Contract No. N68305-76-C-0036 and ERDA Contract No. EG-72-5-Q24523.A000. Port Hueneme, CA: Jun 1978.

Solar Age Magazine. Solar Products Specification Guide. Harrisville, NH: Solar Vision, Inc., Jul 1979.

Solar Energy Research Institute. Insulation Data Manual. SERI/SP 755-789, October 1980.

Solar Engineering. "The Bigger the Better for Solar in Assisting Heat Pump Systems." Solar Engineering, Feb 1978, pp 36-43.

*"Solar system chemicals." Solar Engineering, Aug 1978, p 42.

Swindler, A. Size and Cost Guidelines for Solar Heating and Cooling Systems. Report done on CEL Contract Nos. N62583/77 MR 861 and N62583/77 KR 881. Port Hueneme, CA: Apr 1979.

Thomason, H.E. and Thomason, H.J.L. "Solar Houses/Heating and Cooling Progress Report." Solar Energy, Vol 15, No. 1 (May 1973), pp 27-39.

Tybout, R.A. and Lof, G.O.G. "Solar House Heating." National Resources Journal, Vol 10 (1970), pp 268-326.

U.S. Department of Commerce, Economic Development Administration (1977a). Solar Heating and Cooling of Residential Buildings: Sizing, Installation, and Operation of Systems. Prepared by the Solar Energy Applications Laboratory, Colorado State University. Washington, DC: Oct 1977.

U.S. Department of Commerce, NOAA, National Climatic Center. Climatic Atlas of the United States. Ashville, NC.

U.S. Department of Commerce, Economic Development Administration (1977b). Solar Heating and Cooling of Residential Buildings: Design of Systems. Prepared by the Solar Energy Applications Laboratory, Colorado State University. Washington, DC: Oct 1977.

U.S. Department of Energy (1978a). Solar Heating and Cooling of Buildings Commercialization Report, Part. A. Options and strategies. Washington, DC: May 1978, 3 vols. (Contract CR-05-70065-0)

U.S. Department of Energy (1978b). Legal Barriers to Solar Heating and Cooling of Buildings. Report No. NCP/M2528-01. Washington, DC: Mar 1978.

*U.S. Department of Energy. Passive Solar Design Handbook. Report No. DOE/CS-0127/2. Washington, DC: Jan, 1980.

*U.S. Department of Energy. Active Solar Energy System Design Practice Manual. Report Solar/0802-79/01. Washington, DC: Oct, 1979.

U.S. Department of Energy. Solar Heating Materials Handbook, Environmental and Safety Considerations for Selection. Report No. DOE/TIC-11374. Prepared by Sandia National Laboratory. Albuquerque, NM: Jan 1981.

*U.S. Department of Housing and Urban Development. Solar Heating and Domestic Hot Water Systems, HUD Intermediate Minimum Property Standards. Report No. 4930.2. Washington, DC: 1977.

*U.S. National Oceanic and Atmospheric Administration, National Climatic Center. Climatic Atlas of the United States. Asheville, NC: June 1968.

*U.S Naval Facilities Engineering Command. NAVFAC P-89: Engineering Weather Data. Washington, DC: Jul 1978.

Veltford, T.E. Solar Water Heaters. New York: Copper and Brass Research Association, Mar 1942.

*Werden, R.G. and Spielvogel, L.G. "Sizing of Service Water Heating Equipment in Commercial and Institutional Buildings, Part 2. Research Program Data Acquisition, Reduction and Analysis, and Recommendations for Sizing." ASHRAE Transactions, Vol 75 (1969), pp 181-199.

Whillier, A. "Plastic Covers for Solar Collectors." Solar Energy, Vol 7, No. 3 (Jul-Sep 1963), pp 148-151.

Whillier, A. "Design Factors Influencing Collector Performance." Low Temperature Engineering Applications of Solar Energy, ed. by R C Jordan. New York: American Society of Heating, Refrigerating, and Air-Conditioning Engineers, 1967, pp 27-40.

Yellot, J.I., et al. "Solar Energy Utilization for Heating and Cooling." ASHRAE Handbook - 1978 Applications. New York: American Society of Heating, Refrigerating, and Air-Conditioning Engineers, 1974.

Yellot, J.I., et al. Solar-Oriented Architecture. Tempe, AZ: Arizona State University, College of Agriculture, 1975.

Zarem, A.H. and Erway, D.D., ed;. Introduction to the Utilization of Solar Energy. New York: McGraw-Hill, 1963.

7.0 LIST OF SYMBOLS

A_c	Collector area (ft^2)
C_F	Cost of fuel ($/$10^6$ Btu)
C_{min}	Lesser of the heat capacity flow rates in the space heating load exchanger
COP	Coefficient of performance
C_p	Specific heat of fluid (Btu/lbm deg. F)
f	Fraction of building load supplied by solar heating
$\bar{f}$	Average of f over one year
F_I	Function of energy absorbed by collector/building heating load (ft^{-2})
F_L	Function of collector heat losses/building heating load (ft^{-2})
F_R	Collector heat removal factor (see 3.2)
F'_R	Collector heat exchanger efficiency factor (see 3.2)
G	Flow rate through collector per unit area (lbm/hr ft^2)
I	Solar insolation (Btu/ft^2-day)
I_T	Average instantaneous solar insolation on collector surface
L	Gross heat loss rate (Btu/ft^2-degree day)
M	Area of building (ft^2)
$\dot{m}$	Mass flow through collector (lbm/hr)

$(\dot{m}C_p)_c$	Heat capacity flow rate through collector (Btu/hr deg. F)
$(\dot{m}C_p)_{min}$	The lesser of the two heat capacity flow rates in the collector-tank heat exchanger
N_o	Number of days in month
N_I	Number of days in computation period
P	Degree days
q_c	Solar heat collected per ft^2 of collector per month (Btu/ft^2-mo)
Q_d	DHW heating load (Btu/day)
Q_{dt}	Yearly total load (DHW only) (Btu/yr)
Q_L	Total heat load (space + DHW) per month (Btu/mo)
Q_{Lt}	Yearly total heat load (space + DHW) (Btu/yr)
Q_u	Useful heat collected = $A_c q_c$ (Btu/mo)
R	Gross space heat load = L x M x P
S	Slope factor = ratio of direct solar radiation on a tilted surface to that on a horizontal surface
T_a	Average ambient air temperature (deg. F)
T_i	Collector inlet fluid temperature (deg. F)
T_o	Collector outlet fluid temperature (deg. F)
T_{ref}	212 deg. F, a reference temperature

UA	Overall heat loss coefficient of building times building area (Btu/hr deg. F)
U_{L}	Collector overall heat loss coefficient (Langleys/deg. F-day)
V	Net space heat load = R x $[eta]_{w}$
W	Weight of DHW to be heated/day (lbm)
[alpha]	Absorptance
[epsilon]	Emittance
$[epsilon]_{c}$	Effectiveness of the collector-tank heat exchanger
$[epsilon]_{L}$	Effectiveness of the space heating load heat exchanger
[eta]	Collector efficiency
$[eta]_{collect}$	Average collector efficiency
$[eta]_{delivery}$	Delivery efficiency
$[eta]_{w}$	Heater (DHW or space) utilization efficiency
[theta]	Hours of useful sun/day
[(tau alpha)]	Product of cover transmittance and plate absorptance accounting for dirt and shading
$\overline{[(tau\ alpha)]}$	Average value of [(tau alpha)] over one day
$[(tau\ alpha)]_{n}$	[(tau alpha)] at normal radiation incidence
[phi]	Utilizability (see 3.12)

Preparing Activity:

Navy - YD

Project FACR-0151