UFC 3-540-04N
16 January 2004

UNIFIED FACILITIES CRITERIA (UFC)

DESIGN: DIESEL ELECTRIC GENERATING PLANTS

APPROVED FOR PUBLIC RELEASE; DISTRIBUTION UNLIMITED

UNIFIED FACILITIES CRITERIA (UFC)

DESIGN: GENERAL ELECTRIC GENERATING PLANTS

Any copyrighted material included in this UFC is identified at its point of use.
Use of the copyrighted material apart from this UFC must have the permission of the copyright holder.

U.S. ARMY CORPS OF ENGINEERS (Preparing Activity)

NAVAL FACILITIES ENGINEERING COMMAND

AIR FORCE CIVIL ENGINEERING SUPPORT AGENCY

Record of Changes (changes indicated by **1**\ ... /**1**/)

Change No.	Date	Location

FOREWORD

The Unified Facilities Criteria (UFC) system is prescribed by MIL-STD 3007 and provides planning, design, construction, sustainment, restoration, and modernization criteria, and applies to the Military Departments, the Defense Agencies, and the DoD Field Activities in accordance with USD(AT&L) Memorandum dated 29 May 2002. UFC will be used for all DoD projects and work for other customers where appropriate.

UFC are living documents and will be periodically reviewed, updated, and made available to users as part of the Services' responsibility for providing technical criteria for military construction. Headquarters, U.S. Army Corps of Engineers (HQUSACE), Naval Facilities Engineering Command (NAVFAC), and Air Force Civil Engineer Support Agency (AFCESA) are responsible for administration of the UFC system. Defense agencies should contact the preparing service for document interpretation and improvements. Technical content of UFC is the responsibility of the cognizant DoD working group. Recommended changes with supporting rationale should be sent to the respective service proponent office by the following electronic form: Criteria Change Request (CCR). The form is also accessible from the Internet sites listed below.

UFC are effective upon issuance and are distributed only in electronic media from the following sources:

- Unified Facilities Criteria (UFC) Index http://65.204.17.188//report/doc_ufc.html.
- USACE TECHINFO Internet site http://www.hnd.usace.army.mil/techinfo/index.htm.
- NAVFAC Engineering Innovation and Criteria Office Internet site http://criteria.navfac.navy.mil.
- Construction Criteria Base (CCB) system maintained by the National Institute of Building Sciences at Internet site http://www.nibs.org/ccb.

Hard copies of UFC printed from electronic media should be checked against the current electronic version prior to use to ensure that they are current.

AUTHORIZED BY:

DONALD L. BASHAM, P.E.
Chief, Engineering and Construction Division
U.S. Army Corps of Engineers

DR. JAMES W WRIGHT, P.E.
Chief Engineer
Naval Facilities Engineering Command

KATHLEEN I. FERGUSON, P.E.
The Deputy Civil Engineer
DCS/Installations & Logistics
Department of the Air Force

Dr. GET W. MOY, P.E.
Director, Installations Requirements and Management
Office of the Deputy Under Secretary of Defense (Installations and Environment)

CONTENTS

Page

CHAPTER 1 INTRODUCTION

Paragraph 1-1 PURPOSE AND SCOPE 1-1
1-2 APPLICABILITY 1-1
1-2.1 General Building Requirements 1-1
1-2.2 Safety 1-1
1-2.3 Fire Protection 1-1
1-2.4 Antiterrorism/Force Protection 1-1
1-3 REFERENCES 1-2

APPENDIX A MIL-HDBK 1003/11……..……. A-1

CHAPTER 1

INTRODUCTION

1-1 **PURPOSE AND SCOPE**. This UFC is comprised of two sections. Chapter 1 introduces this UFC and provides a listing of references to other Tri-Service documents closely related to the subject. Appendix A contains the full text copy of the previously released Military Handbook (MIL-HDBK) on this subject. This UFC serves as criteria until such time as the full text UFC is developed from the MIL-HDBK and other sources.

This UFC provides general criteria for the design of diesel electric generating plants.

Note that this document does not constitute a detailed technical design, maintenance or operations manual, and is issued as a general guide to the considerations associated with design of economical, efficient and environmentally acceptable heating plants.

1-2 **APPLICABILITY**. This UFC applies to all Navy service elements and Navy contractors; Army and Air Force service elements should use the appropriate references cited in paragraph 1-3 below; all other DoD agencies may use either document unless explicitly directed otherwise.

1-2.1 **GENERAL BUILDING REQUIREMENTS**. All DoD facilities must comply with UFC 1-200-01, *Design: General Building Requirements*. If any conflict occurs between this UFC and UFC 1-200-01, the requirements of UFC 1-200-01 take precedence.

1-2.2 **SAFETY**. All DoD facilities must comply with DODINST 6055.1 and applicable Occupational Safety and Health Administration (OSHA) safety and health standards.

NOTE: All **NAVY** projects, must comply with OPNAVINST 5100.23 (series), *Navy Occupational Safety and Health Program Manual*. The most recent publication in this series can be accessed at the NAVFAC Safety web site: www.navfac.navy.mil/safety/pub.htm. If any conflict occurs between this UFC and OPNAVINST 5100.23, the requirements of OPNAVINST 5100.23 take precedence.

1-2.3 **FIRE PROTECTION**. All DoD facilities must comply with UFC 3-600-01, *Design: Fire Protection Engineering for Facilities*. If any conflict occurs between this UFC and UFC 3-600-01, the requirements of UFC 3-600-01 take precedence.

1-2.4 **ANTITERRORISM/FORCE PROTECTION**. All DoD facilities must comply with UFC 4-010-01, *Design: DoD Minimum Antiterrorism Standards for Buildings*. If any conflict occurs between this UFC and UFC 4-010-01, the requirements of UFC 4-010-01 take precedence.

1-3 **REFERENCES**. The following Tri-Service publications have valuable information on the subject of this UFC. When the full text UFC is developed for this subject, applicable portions of these documents will be incorporated into the text. The designer is encouraged to access and review these documents as well as the references cited in Appendix A.

1. US Army Corps of Engineers
   Commander
   ATTN: CEIM-IM-PD
   2803 52nd Avenue
   Hyattsville, MD 20781-1102
   (301) 394-0081 fax: 0084

   karl.abt@hq02.usace.army.mil
   http://www.usace.army.mil/inet/usace-docs/

   AFETL98-2, Clean Air Act Amendments Required for Electric Generators and Power Plants
   USACE TM 5-685, Operation, Maintenance and Repair and Repair of Auxiliary Generators
   26 August 1996

APPENDIX A

MIL-HDBK 1003/11
DIESEL ELECTRIC GENERATING PLANTS

MILITARY HANDBOOK

DIESEL-ELECTRIC GENERATING PLANTS

AMSC N/A

DISTRIBUTION STATEMENT A. APPROVED FOR PUBLIC RELEASE: DISTRIBUTION IS UNLIMITED

AREA FACR

PAGE ii INTENTIONALLY BLANK

ABSTRACT

This handbook provides basic design guidance which has been developed from extensive reevaluation of facilities. It is intended for use by experienced architects and engineers. The criteria presented is for the design of stationary diesel-electric generating plants for prime and standby/emergency duty. Planning factors are provided for plants incorporating the cogeneration of steam and/or hot-water for other uses. Changes required for utility interconnections, equipment applications and the types of waste-heat recovery cycles available for cogeneration are also provided. Data and criteria required for design of diesel-electric generating plants include information on the service category and the types of diesel prime movers, generators and utility interfaces available, sources of power and fuels available, other plant location factors, advantages and disadvantages of various plant ownership options, and electrical and thermal loads anticipated. Design criteria are included for diesel-engine auxiliaries and foundations, voltage ratings, generators and exciters, control wiring and components, piping, insulation, corrosion protection, and for various other design factors. Guidance is provided to assist in the design of different types of plant construction and of nonstandard plants.

PAGE iv INTENTIONALLY BLANK

FOREWORD

This handbook has been developed from an evaluation of facilities in the shore establishment, from surveys of the availability of new materials and construction methods, and from selection of the best design practices of the Naval Facilities Engineering Command (NAVFACENGCOM), other Government agencies, and the private sector. This handbook was prepared using, to the maximum extent feasible, national professional society, association, and institute standards. Deviations from this criteria, in the planning, engineering, design, and construction of Naval shore facilities, cannot be made without prior approval of NAVFACENGCOM HQ Code 04.

Design cannot remain static any more than the functions it serves or the technologies it uses. Accordingly, recommendations for improvement are encouraged and should be furnished to Commanding Officer, Naval Facilities Engineering Command, Southern Division, Code 04A3ES, P.O. Box 10068, Charleston, S.C. 29411-0068, telephone (803) 743-0458.

THIS HANDBOOK SHALL NOT BE USED AS A REFERENCED DOCUMENT FOR PROCUREMENT OF FACILITIES CONSTRUCTION. IT IS TO BE USED IN THE PURCHASE OF FACILITIES ENGINEERING STUDIES AND DESIGN (FINAL PLANS, SPECIFICATIONS, AND COST ESTIMATES). DO NOT REFERENCE IT IN MILITARY OR FEDERAL SPECIFICATIONS OR OTHER PROCUREMENT DOCUMENTS.

MECHANICAL ENGINEERING CRITERIA MANUALS

CRITERIA MANUAL	TITLE	PREPARING ACTIVITY
DM-3.01	Plumbing Systems	PACDIV
MIL-HDBK-1003/2	Incinerators (proposed)	SOUTHDIV
DM-3.03	Heating, Ventilating, Air Conditioning, and Dehumidifying Systems	WESTDIV
DM-3.04	Refrigeration Systems for Cold Storage	SOUTHDIV
DM-3.05	Compressed Air and Vacuum Systems	HQTRS
DM-3.06	Central Heating Plants	NEESA
MIL-HDBK-1003/7	Fossil Fuel Power Plants (proposed)	NEESA
MIL-HDBK-1003/8	Exterior Distribution of Utility Steam, HTW, CHW, Fuel Gas and Compressed Air	CHESDIV
DM-3.09	Elevators, Escalators, Dumbwaiters, Access Lifts, and Pneumatic Tube Systems	WESTDIV
DM-3.10	Noise & Vibration Control for Mechanical Equipment (Tri-Service)	ARMY
MIL-HDBK-1003/11	Diesel Electric Generating Plants	SOUTHDIV
MIL-HDBK-1003/12	Thermal Heating Plant Controls (proposed)	NEESA
MIL-HDBK-1003/13A	Solar Heating of Buildings & Domestic Hot Water	CESO

MECHANICAL ENGINEERING CRITERIA MANUALS

CRITERIA MANUAL	TITLE	PREPARING ACTIVITY
DM-3.14	Power Plant Acoustics (Tri-Service)	ARMY
DM-3.15	Air Pollution Control Systems/Boilers and Incinerators (Tri-Service)	ARMY
DM-3.16	Thermal Storage Systems	HDQTRS
MIL-HDBK-1003/17	Industrial Ventilation Systems	NEESA
MIL-HDBK-1003/18	Central Building Automation Systems	ARMY
MIL-HDBK-1003/19	Design Procedures for Passive Solar Buildings	CESO

Note: Design manuals, when revised, will be converted to military handbooks and listed in the military handbook section of NAVFAC P-34.

This handbook is issued to provide immediate guidance to the user. However, it may or may not conform to format requirements of MIL-HDBK-1006/3 and will be corrected on the next update.

DIESEL-ELECTRIC GENERATING PLANTS

CONTENTS

Page

Section 1 INTRODUCTION
1.1 Scope 1
1.2 Diesel-Electric Generating Plant Types. 1
1.3 Definitive Designs and Guide Specification. 1
1.4 Usage 1
1.4.1 NACFAC Definitive Drawings. 2

Section 2 POLICY
2.1 Diesel-Electric Generating Plant Design 3
2.2 Sources of Electric Power 3
2.3 Duty Types and Loads. 3
2.3.1 Prime Duty Electric Generating Plants 3
2.3.2 Standby/Emergency Duty. 3
2.3.2.1 Standby Electrical Source 3
2.3.2.2 Emergency Electric Source 3
2.3.2.3 Uninterruptible (No-Break) Power Supplies 4
2.3.3 Electric Loads. 4
2.3.3.1 Primary Load. 4
2.3.3.2 Minimum Essential Operating Load. 4
2.3.3.3 Vital Operation Loads 4
2.3.3.4 Critical Loads. 4
2.4 Planning Considerations 4
2.4.1 Methods of Satisfying Electric Loads. 4
2.4.2 Evaluation Factors. 5
2.5 Commercial Versus Government Ownership (Prime Duty Only) 5
2.5.1 Commercial Ownership. 5
2.5.1.1 Third Party Financing 5
2.5.1.2 Coordination with Other Agencies. 6
2.5.2 Government Ownership. 6
2.6 Fuel Selections 6
2.7 Reliability and Maintainability 7
2.8 Economic Studies. 7
2.8.1 Economic Study Requirements 7
2.8.2 Level of Analysis Required. 7
2.8.3 Life-Cycle Bidding. 7

Section 3 INFORMATION REQUIRED FOR DESIGN
3.1 Introduction. 8
3.2 Electrical Loads. 8
3.2.1 Electric Load Determination 8
3.2.2 Typical Electrical Load Curves. 8
3.2.2.1 Growth Curve. 8

3.2.2.2 Average 24-Hour Load Curves 8
3.2.2.3 Annual Load Durations Curves. 8
3.3 Duty and Capacity Requirements for Electric Generating Plants 8
3.4 Plant Location Factors. 9
3.5 Cogeneration Information. 9
3.5.1 Utility Data. 9
3.5.2 Loads 10
3.6 Checklist for Facility Interfaces 10
3.6.1 Engine. 10
3.6.1.1 Engine-Generator Set Duty 10
3.6.1.2 Number of Diesel Engine-Generator Sets. 10
3.6.1.3 Generation Rate 10
3.6.1.4 Rotational Speed. 11
3.6.1.5 Engine Size 12
3.6.2 Fuel System 12
3.6.2.1 Fuel Rate 12
3.6.2.2 Storage Tank Volume 12
3.6.2.3 Day Tank Volume 12
3.6.3 Induction (Combustion) and Exhaust Air. 13
3.6.3.1 Combustion Air. 13
3.6.3.2 Maximum Intake Restriction. 13
3.6.3.3 Exhaust 13
3.6.4 Cooling Systems 14
3.6.4.1 Cooling Medium. 14
3.6.4.2 Cooling Water 14
3.6.4.3 Heat Rejection. 14
3.6.5 Generator Room. 14
3.6.5.1 Heat Radiated from the Engine and the Generator 14
3.6.5.2 Design Ambient Temperatures 14

Section 4 COGENERATION CONSIDERATIONS
4.1 Introduction. 15
4.2 Design Considerations 15
4.2.1 Fuel Availability 15
4.2.2 Load Sizing Criteria. 15
4.2.2.1 Electric and Thermal Loads. 15
4.2.2.2 Load Balance. 15
4.2.2.3 Load Coincidence. 15
4.2.3 Prime Mover Sizing. 15
4.2.4 Thermal Product Properties. 15
4.2.5 Power Sales Agreements. 16
4.2.6 Site Adaptability 16
4.2.7 Electric Utility Grid Interconnection 16
4.2.7.1 United States Locations 16
4.2.7.2 Foreign Locations 16
4.2.8 Grid Protection Requirements. 16
4.3 Heat Recovery Applications. 16
4.3.1 Sources of Waste Heat 16
4.3.2 Design Priority 17
4.3.3 Heat Recovery from Jacket and Lubricant Cooling Systems 17
4.3.3.1 Hot Water Systems 17

4.3.3.2 Steam Systems 17
4.3.3.3 Ebullient Systems 18
4.3.4 Exhaust Gas Heat Recovery 19
4.3.4.1 Supplemental Firing 20
4.3.4.2 Combined Cycle Applications 20
4.3.5 Thermal Storage 20
4.3.6 Uses for Recovered Heat 20
4.3.6.1 Hot Water 20
4.3.6.2 Steam 22

Section 5 DEFINITIVE DESIGNS FOR DIESEL-ELECTRIC GENERATING PLANTS
5.1 Definitive Diesel-Electric Generating Plants. 23
5.1.1 Modifications to NAVFAC Definitive Designs. 23
5.1.2 Matching Definitive Designs to Load Demands 24
5.1.3 Definitive Design Plant Capacities. 24
5.2 Criteria for Unit and Plant Capacities. 24
5.2.1 Number of Units 24
5.2.2 Reliability 24
5.2.2.1 Prime Duty. 24
5.2.2.2 Standby Duty. 24
5.2.2.3 Emergency Duty. 24
5.2.3 Flexibility 24
5.3 Selection of Unit Capacity. 25
5.3.1 Ability to Serve Load Under Abnormal Conditions 25
5.3.2 Load Shedding 26
5.3.3 Spinning Reserve. 26
5.3.4 Type of Load Served 26
5.3.4.1 Voltage-Sensitive Loads 26
5.3.4.2 Size of Motors. 26
5.4 Fuel Selection. 26
5.4.1 Fuel Types. 26
5.4.2 Nondiesel Fuels 26
5.4.3 Fuel Characteristics. 27
5.4.4 Bid Evaluation and Compensatory Damages for Prime Duty Plants 27
5.4.5 Fuel Storage and Handling 27
5.4.5.1 Fuel Flow Diagrams. 27
5.4.5.2 Fuel Preparation. 27
5.4.5.3 Conversion Fuel 28
5.4.6 Fuel Storage and Day Tank Volumes 28
5.4.6.1 Prime Duty Plants 28
5.4.6.2 Standby/Emergency Duty Plants in Standby Service. . . . 28
5.4.6.3 Standby/Emergency Duty Plants in Emergency Service. . . 28
5.4.6.4 Bulk Fuel Storage and Handling. 28
5.4.7 Air Intake Systems. 28
5.4.8 Precooling and Aftercooling 29
5.4.9 Engine Exhaust Systems. 29
5.4.9.1 Exhaust Silencers 29
5.4.9.2 Exhaust Gas Quantities. 29
5.4.9.3 Exhaust Connections 29
5.4.10 Cooling Systems 29
5.4.10.1 Ebullient Cooling 30

5.4.10.2 Selection Guidance. 30
5.4.10.3 Design Temperatures 30
5.4.11 Lubricating Oil Systems 30
5.4.11.1 Lubricating Oil Filters 30
5.4.11.2 Warm-Up Systems 30
5.4.11.3 Lubricant Pumps 31
5.4.11.4 Waste Oil 31
5.4.11.5 Special Lubricant Treatment 31
5.4.12 Starting Systems. 31
5.4.12.1 Air Starting. 31
5.4.12.2 Compressors for Air Starting. 31
5.4.12.3 Starting Air Receivers. 31
5.4.12.4 Electric Starting 32
5.4.12.5 Preheat System for Testing Standby/Emergency Duty Units. 32
5.4.13 Foundations 32
5.4.13.1 Investigation 32
5.4.13.2 Design. 32
5.4.13.3 Minimum Requirements. 33
5.4.14 Cranes for Engine Servicing 34
5.4.14.1 Sizing. 34
5.4.14.2 Electric Operation. 34
5.4.14.3 Openings. 34

Section 6 SYNCHRONOUS GENERATORS, EXCITATION, AND REGULATION
6.1 General 35
6.2 Synchronous Generators. 35
6.2.1 Rating. 36
6.2.2 NEMA Temperature Limitation 36
6.2.3 NEMA Temperature Classifications. 36
6.2.4 Generated (Terminal) Voltage. 36
6.3 Excitation and Voltage Regulation 36
6.4 Paralleling and Synchronizing 36
6.4.1 Sychronization. 36
6.4.2 Load Division 37

Section 7 ENGINE CONTROLS AND INSTRUMENTS
7.1 General 38
7.2 Speed Governing System. 38
7.2.1 Speed Regulation. 38
7.2.2 Governor Operation. 38
7.2.3 Performance Requirements. 38
7.2.4 Modifications 38
7.3 Controls. 39
7.3.1 Engine Fault Monitoring and Shutdown Controls 39
7.3.2 Engine Start/Stop Cranking Control. 40
7.3.3 Operation Mode Switch 40
7.4 Instrumentation 40

Section 8 GENERATOR CONTROLS AND PROTECTION
8.1 Control Capabilities. 41
8.2 Control Locations 41
8.2.1 Definitive Designs 1, 2, 3, and 4 41

8.2.2 Alternate Definitive Design Control 41
8.2.3 Small Low-Voltage Plants. 41
8.2.3.1 Automatic Transfer Switch (Single Units Only) 41
8.2.3.2 Multiple Ground Points 42
8.3 Operating Control Requirements. 42
8.3.1 Unit Control. 42
8.3.2 Synchronizing Control 42
8.3.3 Permissive Control. 43
8.3.4 System Monitoring 43
8.3.4.1 Type of System. 43
8.3.4.2 SCADA 43
8.4 Generator Protection. 43
8.4.1 Surge Protection. 43
8.4.2 Generator Neutral Grounding 43
8.4.2.1 Solid Grounding 43
8.4.2.2 Impedance Grounding 44
8.4.3 Protective Relaying 44
8.4.3.1 Generator Protection. 45
8.4.3.2 Incoming Line and Feeder Protection 45
8.4.3.3 Load Shedding Capability. 45
8.4.3.4 Analysis. 45
8.4.3.5 Control Power 45
45

Section 9 BUILDING CONSTRUCTION FOR DIESEL-ELECTRIC GENERATING PLANTS
9.1 Building Construction 46
9.2 Single-Level Diesel-Electric Generating Plant Layout. 47
9.3 Two-Level Diesel-Electric Generating Plant Layout. 47
9.3.1 Two-Level Plant with a Basement 47
9.3.2 Two-Level Plant with a First Floor at Grade 47

Section 10 NONSTANDARD DIESEL-ELECTRIC GENERATING PLANTS
10.1 Conditions for Nonstandard Plant Selection. 48
10.2 Gasoline Engine Electric Generators 48
10.3 Gaseous and Dual Fuel Engines 48
10.3.1 Gas Heating Value 48
10.3.2 Wet Gas Treatment 48
10.3.3 Gas Supply Shut-Off 48
10.3.4 Gas Pressure. 48

Section 11 WATER CONDITIONING
11.1 Purpose of Treatment. 49
11.2 Choice of Treatment 49
11.3 Chemicals and Conversion Factors. 49
11.4 Diesel-Electric Generating Plant Cooling Systems 49
11.4.1 Radiator Cooling Circuits 49
11.4.2 Cooling Systems for Larger Diesel Engines 49
11.4.3 Ocean Water Cooling 50
11.4.4 Exhaust Heat Reclamation. 50
11.4.5 Internal Water Treatment. 51

11.4.5.1 Blowdown. 51
11.4.5.2 Chemicals Used. 51
11.4.6 Raw Water Treatment 51
11.4.7 Water Treatment Selection Factors 52
11.4.8 Types of Circulating Coolant Systems. 52

Section 12 PIPING
12.1 Piping Material 55
12.1.1 Specifications. 55
12.1.2 Metal Piping. 55
12.1.3 Plastic Piping. 55
12.2 Pipe Thickness. 55
12.3 Piping Flexibility. 55
12.3.1 General 55
12.3.1.1 Thermal Expansion 55
12.3.1.2 Pipe System Flexibility 55
12.3.1.3 Obtaining System Flexibility. 56
12.4 Anchors and Supports. 56
12.4.1 Location. 56
12.4.1.1 Stops and Guides. 56
12.4.1.2 Rigid Hangers 56
12.4.2 Anchor and Support Types. 57
12.5 Welding 57
12.6 Flows and Recommended Velocities. 57
12.7 Valves and Specialties. 57

Section 13 INSULATION
13.1 Insulation Materials. 58
13.2 Insulation Applications 59
13.3 Economic Thickness. 59
13.4 Fire Limitations. 59

Section 14 CORROSION PROTECTION
14.1 Justification For Corrosion Protection. 60
14.1.1 Economy 60
14.1.2 Operational Necessity 60
14.1.3 Hazards in Handling Materials 60
14.2 Causes of Corrosion 60
14.2.1 Electrochemical (Galvanic). 60
14.2.1.1 Dissimilar Metals 60
14.2.1.2 Corrosion Protection. 60
14.2.2 Differential Environments 60
14.2.3 Stray Currents. 61
14.2.4 Chemical Attack 61
14.2.5 Microbiological (Tuberculation) 61
14.2.6 Atmospheric 61
14.2.7 Stress and Fatigue. 61
14.3 Corrosion Control Methods 61
14.3.1 Nonmetallic Materials 61
14.3.1.1 Inorganic 61
14.3.1.2 Plastics. 61
14.3.2 Passive Metals. 61
14.3.3 Metal Protection. 62

14.3.3.1 Protective Coatings for Corrosion Control 62
14.3.3.2 Ferrous Metals. 62
14.3.3.3 Aluminum, Magnesium, and Their Alloys 63
14.3.4 Changes of Environment. 63
14.3.4.1 Water Treatment 63
14.3.4.2 Inhibitors. 63
14.3.4.3 Soil Alteration 63

Section 15 MISCELLANEOUS CRITERIA
15.1 Site Considerations 64
15.2 Hazards Safety Protection 64
15.2.1 Local Codes 64
15.2.2 National Industrial Safety Codes. 64
15.2.3 Fire Protection 64
15.2.4 Security and Safety Protection. 64
15.3 Architectural Criteria. 64
15.3.1 General Requirements. 64
15.3.1.1 Definitive Designs. 65
15.3.1.2 Building Extensions 65
15.3.1.3 Provisions for Future Expansion 65
15.3.2 Outdoor and Semi-Outdoor Plants 65
15.3.3 Arrangements. 65
15.3.4 Noise Control 66
15.4 Structural Criteria 66
15.4.1 Foundations 66
15.4.1.1 Extra Piling. 66
15.4.1.2 Definitive Designs. 66
15.4.2 Floor Loads 66
15.4.3 Platforms and Ladders 67
15.4.3.1 Ladders 67
15.4.3.2 Platforms 67
15.4.4 Cranes and Hoists 67
15.5 Typhoon and Seismic Considerations. 67
15.5.1 Piping and Raceway Systems. 67
15.5.2 Equipment 67
15.5.3 Controls. 67
15.6 Heating, Ventilating, and Air Conditioning. 67
15.6.1 Heating Diesel-Electric Generating Plant Buildings 67
15.6.1.1 Exhaust Gas Heat Recovery 67
15.6.1.2 Auxiliary Heating Boilers 68
15.6.1.3 Combustion Air. 68
15.6.2 Ventilating Diesel-Electric Generating Plant Buildings 68
15.6.2.1 Engine Rooms. 68
15.6.2.2 Battery Room. 69
15.6.3 Air Conditioning of Rooms 69
15.7 Plumbing. 69
15.7.1 Drains. 69
15.7.2 Water Line Equipment. 70
15.7.3 Battery Rooms Emergency Showers and Eye Wash Facilities. 70
15.7.4 Compressed Air. 70

15.8 Electrical Criteria 70
15.8.1 Station Service Transformers. 70
15.8.2 Lighting. 70
15.8.3 Receptacles 70
15.8.4 Hazardous Area Requirements 71
15.8.5 Electromagnetic Interference Requirements 71
15.8.6 Lightning Protection. 71
15.8.7 Energy Conservation 71
15.8.8 Controls and Alarm Systems. 71
15.9 Energy Monitoring and Control Systems 71

FIGURES

1 Typical Diesel-Electrical Generating Plant Load Curve. 9
2 Heat Recovery System. 10
3 Ebullient System. 19
4 Combined Cycle Operation. 21
5 Synchronous Generator Configuration 35
6 Minimum Relay Protection. 44
7 Cooling Water Flow Diagram: Once-Through System. 53
8 Cooling Water Flow Diagram: Open Cooling Tower System. 53
9 Cooling Water Flow Diagram: Closed Cooling Tower System. 54
10 Cooling Water Flow Diagram: Air Cooled Radiator System. 54

TABLES

1 Summary Diesel-Electric Generating Plant NAVFAC Definitive Designs and Guide Specifications for Duty Types and Generating Capacity Ranges 1
2 Summary of Duty and Capacity Requirements 10
3 Diesel-Electric Generating Plant Design and Location Factors. 11
4 Thermal Loads for Cogeneration Considerations 12
5 Check List for Facility Interfaces. 13
6 Summary Heat Balance: Cogeneration Using Diesel-Engine Generators. 17
7 Recommendations-Unit Sizes, Maximum Rotational Speeds and Break Mean Effective Pressure. 23
8 Example of Individual Generating-Unit Capacity Sizing. 25
9 Speed Governing Performance Requirements. 39
10 Plant Construction Type Plannning Factors 46
11 Maximum Boiler Water Concentrations 50
12 Typical Performance of Some Water Treatments. 51
13 Circulating Water Treatment Selection Factors 52
14 Characteristics of Thermal Insulation Materials 58
15 Protective Coatings for Corrosion Control 62
16 Inorganic Inhibitors and Corrosion System 63
17 Minimum Engine Room Ventilation 69

BIBLIOGRAPHY. 73

REFERENCES. 75

Section 1: INTRODUCTION

1.1 Scope. Data and criteria provided in this handbook apply to the design of diesel-electric generating plants for naval shore activities for prime and standby/emergency duty. Considerations for incorporating the cogeneration of steam and/or hot water to satisfy export heat loads, or to generate additional electric power, are addressed.

1.2 Diesel-Electric Generating Plant Types. This handbook addresses stationary diesel-electric generating plants of two duty types: Prime Duty and Standby/Emergency Duty electric generating plants. Duty types and the electrical loads which are served by each are addressed in Section 2. Guidance for planing the design is provided in NAVFAC DM-4.01, Electrical Engineering, Preliminary Design Considerations, Section 3; and in the National Fire Protection Association, (NFPA) No. 70, National Electrical Code, (NEC).

1.3 Definitive Designs and Guide Specifications. The Navy has prepared several definitive designs and guide specifications for stationary diesel-electric generating plants which are summarized in Table 1 as to capacity ranges in kilowats (kW), corresponding guide specifications, and definitive designs for each duty type.

Table 1
Summary Diesel-Electric Generating Plant NAVFAC
Definitive Designs and Guide Specifications
for Duty Types and Generating Capacity Ranges

Duty Type	Generating Capacity	Definitive Design Number	Guide Specification
Prime	10 kW to 500 kW	None Available	NFGS-16208
	501 kW to 2500 kW	Design 1	NFGS-16202
	2501 kW and larger	Design 2	NFGS-16203
Standby/ Emergency	10 kW to 300 kW	None Available	NFGS-16208
	301 kW to 1000 kW	Design 3	NFGS-16204
	1001 kW to 3000 kW	Design 4	NFGS-16205

1.4 Usage: Definitive designs are available for both prime duty and for standby/emergency duty plants (refer to NAVFAC P-272, Definitive Designs for Naval Shore Facilities, Part II). Naval Facilities Guide Specifications (NFGS) have been prepared for each design. Guidance contained within this handbook may be used to tailor definitive designs and guide specifications. The additional Naval Facilities Guide Specification, NFGS-16208, Diesel Engine-Generator Sets 10 kW to 500 kW Prime Duty Units and 10 kW to 300 KW Standby/Emergency Duty Units, is available without a definitive design. This guide specification is intended for use where standard commercial units are

to be procured one or two at a time as part of a building construction project or for single unit replacements. Note that definitive Design Number 4 and the associated NFGS-16205, Power-Generating Plants, Diesel Electric (Design 4) 1001 kW to 3000 kW Standby/Emergency Duty Units, is not intended for standby/emergency duty generating units above 3,000 kW in capacity.

1.4.1 NAVFAC Definitive Drawings. Unless otherwise listed drawings apply to all designs (i.e. 1, 2, 3, and 4). Title of applicable drawings are given below as follows:

1403463 - Symbol Legend
1403464 - Operating Floor Plan, Design 1
1403465 - Basement Floor Plan, Design 1
1403466 - Building Isometrics and Section, Design 1
1403467 - Operating Floor Plan, Design 2
1403468 - Basement Floor Plan, Design 2
1403469 - Building Isometrics and Section, Design 2
1403470 - Operating Floor Plan, Design 3
1403471 - Building Isometrics and Section, Design 3
1403472 - Operating Floor Plan, Design 4
1403473 - Building Isometrics and Section, Design 4
1403474 - Typical Wall Sections
1403475 - Miscellaneous Details
1403476 - Lubricating Oil System Flow Diagram, Designs 1 and 2
1403477 - Lubricating Oil System Flow Diagram, Designs 3 and 4
1403478 - Fuel Oil System Flow Diagram, Designs 1, 2, and 4
1403479 - Fuel Oil System Flow Diagram, Design 3
1403480 - Radiator Cooling System Flow Diagram
1403481 - Tower or Natural Cooling System Flow Diagram
1403482 - Compressed Air and Space Heating Flow Diagram
1403483 - Miscellaneous Mechanical Details
1403484 - Primary Electrical One-Line Diagram, Designs 1 and 2
1403485 - Primary Electrical One-Line Diagram, Designs 3 and 4
1403486 - Station Service System One-Line Diagram, Designs 1 and 2
1403487 - Station Service System One-Line Diagram, Designs 3 and 4

Section 2: POLICY

2.1 Diesel-Electric Generating Plant Design. Diesel-electric generating plants shall be designed to satisfy either prime duty or standby/emergency duty electrical service requirements in fulfilling the temporary or permanent mission of a naval activity at the lowest life-cycle cost. This handbook is not intended for portable generating units.

2.2 Sources of Electric Power. Naval activities will normally be provided with several sources of electric power. Sources include commercial and government-owned electric generating plants. The number and types of sources required depend on the mission of the facility, activities taking place there, and the existing equipment. Specific design criteria for various types of facilities are referenced in their design manuals. Guidance for sizing, calculating electric loads and requirements for specific design features are contained in this handbook and in NAVFAC DM-4.01, Electrical Engineering, Preliminary Design Considerations.

2.3 Duty Types and Loads. Stationary diesel-electric generating plants are separated into two duty types for design: Prime Duty and Standby/Emergency Duty.

2.3.1 Prime Duty Electric Generating Plants. Prime duty electric generating plants are designed for continuous service and are sized for peak electrical demand during normal peacetime operations. Continuous service is defined as operations exceeding 4,000 hours per year or when a plant is run, or planned to be run, more than 40,000 hours within the initial 10 years of operations. A generating plant is also considered to be prime duty if it is the only source of electricity, regardless of the operating schedule.

2.3.2 Standby/Emergency Duty. Any generating plant operating fewer hours per year than a prime duty plant is considered a standby/emergency duty plant as long as it is not also the prime source of electric power. Several types of standby/emergency duty plants are required to satisfy statutory and regulatory requirements within the United States (U.S.). Types are explained below but will be addressed simply as standby/emergency throughout the remainder of this handbook. The standby/emergency source of power shall be sized to satisfy mobilization and emergency loads in the event of an outage of the prime source of power.

2.3.2.1 Standby Electric Source. The standby source of electricity for a facility is sized for the minimum essential operating load. When added to the capacity of the prime source of electricity, the combined generating capacity must be sufficient to serve the estimated peak electric demand under mobilization conditions.

2.3.2.2 Emergency Electric Source. The emergency source of electrical power is to provide electrical service to vital operations whenever there is an interruption of the prime source of electricity. Vital operations are those activities wherein an interruption in electrical supply can be tolerated for only a relatively short period. For certain operations, the

permissible interruption may be as long as 4 hours; for others it is only a few seconds.

2.3.2.3 Uninterruptible (No-Break) Power Supplies. Uninterruptible Power Supply (UPS) systems are required for certain electronic equipment and for other equipment performing critical functions which cannot tolerate any power interruption. An UPS system provides continuous disturbance-free (regulated) electric power and contains a battery bank which "floats-on-the-line." Standby/emergency diesel-electric generators are provided to backup such systems, since battery installations normally are sized to supply power for not more than 15 minutes.

2.3.3 Electrical Loads. Facility electrical loads, defined in NAVFAC DM-4.01, are categorized for each electrical source.

2.3.3.1 Primary Load. The primary load, which includes the critical load, is the peak electrical demand under peacetime conditions.

2.3.3.2 Minimum Essential Operating Load. This constitutes the minimum electric load necessary to support absolutely essential operations. Illumination is reduced to the bare minimum; all convenience and other loads are suspended. Refer to NAVFAC DM-4.01 and to the National Fire Protection Association, Inc,. (NFPA) No. 70 National Electrical Code (NEC); Articles 517, Health Care Facilities, 700, Emergency Systems and 701, Legally Required Standby Systems for specific criteria and guidance in determining this load.

2.3.3.3 Vital Operation Loads. Vital operations are defined as those activities where an outage will cause the loss of the ability to perform primary missions. The loss of the ability to satisfy these loads could result in disastrous situations or in extreme safety hazards as compared to minor disruptions and inconveniences.

2.3.3.4 Critical Loads. The critical electric load is that part of the electrical load which requires continuous quality electric power. Examples include facilities such as hospitals, dry docks, shipyards, cold-iron support, and those facilities with computers or electronic equipment, as found in data processing and communications centers.

2.4 Planning Considerations.

2.4.1 Methods of Satisfying Electric Loads. The following alternate methods of satisfying electric load demands should be considered:

a) rehabilitation of existing equipment,

b) replacement of existing installations,

c) new installations,

d) consolidation of electric generating installations,

e) modernization,

f) cogeneration,

g) multiservice possibilities, for example, one electric generating plant to serve more than one installation, or

h) government versus commercial ownership and/or operations of facilities.

2.4.2 Evaluation Factors. Consider the following factors when planning and evaluating types of sources and when selecting electric generating facility types and systems:

a) actual loads, such as electrical lighting, miscellaneous power, heat, refrigeration, etc., and their duration,

b) mobilization requirements,

c) future expansion plans,

d) permanence of the electric generating plant and the facility which it serves,

e) standby/emergency electrical loads and requirements,

f) potential for cogeneration applications,

g) utility rate structure,

h) continuous integrity of utility service,

i) effects of planned energy conservation measures, and

j) past experience with other electric generating plants.

2.5 Commercial Versus Government Ownership (Prime Duty Only).

2.5.1 Commercial Ownership. Commercial sources (electric utility companies) shall be utilized for the prime source of electrical power unless it can be proven that it is necessary or more economical for the Government to perform the service. The possibility of inducing private industry to undertake the operation must be examined before Government ownership may be considered.

2.5.1.1 Third Party Financing. Third party funding of major facilities energy systems shall be vigorously pursued for facilities within the United States. (Refer to DEPPM 85-3, Defense Energy Program Policy Memorandum, Third Party Funding of Facilities Energy Systems). A major facilities energy system is defined as a project affecting 50 percent or more of a plant with thermal energy input of 100 million British thermal units (Btu) per hour (h) or more. Third party funding consists of contracting with a private sector firm for the construction, operation and maintenance of a major facilities energy system located on a Defense installation.

2.5.1.2 Coordination with Other Agencies. The Department of Housing and Urban Development (HUD) is coordinating third party financing of district heating systems to revitalize economically depressed inner urban areas. HUD has a program of matching block grants to assist municipalities in attracting private capital. In urban areas near Defense facilities, HUD would like to have the facility energy requirement be considered as a possible "base load" of such district heating or cogeneration plants. The policy of the Department of Defense states that, cooperation with, and support of, such beneficial programs sponsored by other Federal and local agencies should be given within the bounds of the installation's legal authority and with primary consideration given to continued, reliable mission support. The initiator of any third party contract should contact the local HUD regional office. The military department entering into a third party contract, must coordinate with the local utility provider to minimize any adverse rate impact on their customers and prevent infringement upon the utility company's franchise rights to serve the area.

2.5.2 Government Ownership. The Government shall own and operate its own source of electric power if justified by any of the following factors:

a) Commercial sources of electric power and personnel are either not available or are not of sufficient generating capacity or proximity to meet the load demands.

b) Economics studies indicate that substantial savings to the Government will result from owning and operating an electric generating plant. Economic studies shall use the true cost basis (including all allocatable items of overhead and personnel, and a depreciation and maintenance fund for equipment replacement and repair) in evaluating Government ownership. Only those costs which would remain unchanged, regardless of whether the services were owned or purchased, may be neglected in these analyses.

c) Abnormal or fluctuating military electric demand, necessary to meet current and mobilization requirements, that has discouraged private investment may justify Government ownership.

d) Government ownership may be justified when there is demand for complete command control to avoid compromising highly classified security information.

e) The need for complete demilitarization prior to final disposal, of certain types of military equipment may justify Government ownership.

f) Other reasons clearly demonstrating a particular Government owned electrical power generation activity to be in the public interest may justify a Government ownership.

2.6 Fuel Selections. Refer to Department of Defense (DOD) 4270.1-M construction Criteria Manual, Section 9-1, for policy as to selection of fuels for diesel power plants. The initial or primary fuel shall be the one that is the most economical in operation consistent with availability and air pollution control requirements. All factors should be considered, such as

the life-cycle costs of construction, plant operation, procurement, handling, and the firing of fuel. The capability and/or space to retrofit alternate fuel accessories should be provided with the initial design and construction where the chance exists of losing the source of primary fuel.

2.7 Reliability and Maintainability. Diesel-electric generating plants should be designed to maximize operating reliability and ease of maintenance. Space must be provided around equipment and components for easy access. Controls should be provided in multiple unit installations to prevent maintenance activity taking place on one unit from interfering with operating units. Spare diesel-engine generator sets are required for electric generating plants in accordance with the applicable duty type criteria. Packaged electric-generating units may be considered for stand-alone installations but they must comply with applicable criteria.

2.8 Economic Studies. All new or modified plant construction proposals shall consider suitable alternative methods to determine the most beneficial or cost-effective method of accomplishment. All economic analyses shall follow the policy as outlined in SECNAVINST 7000.14, Economic Analysis and Program Evaluation of Navy Resource Management. Life-cycle cost analyses are required for economic analyses. For information and guidance in performing life-cycle cost analysis refer to NAVFAC P-442, Economic Analysis Handbook.

2.8.1 Economic Study Requirements. An economic study is required for:

a) evaluating Government versus commercial ownership,

b) evaluating third party funding of electric generating facilities, (DEPPM 85-3),

c) investigating other electric-generating technology, such as gas turbine-generators versus diesel-electric generation,

d) evaluation of cogeneration applicability, and

e) evaluating various design alternatives once a specific technology has been selected. Such evaluations may include the selection of a cooling system type or determining the number of generator sets to install within a single electric generating plant.

2.8.2 Level of Analysis Required. Evaluation of Government versus commercial ownership shall be conducted using life-cycle cost analysis Class 1, "Fundamental Planning Analysis" Type II, as defined in P-442. Also see DEPPM 85-3 for guidance and life-cycle economic analysis requirements in evaluating third party funding. All other economic studies shall use the life-cycle cost analysis Class 2, "Design Analysis" methodology, as defined in P-442.

2.8.3 Life-Cycle Bidding. Life-cycle cost analysis shall be strongly considered for evaluation of bid quotations for prime duty diesel-electric generating plants. For details and guidance in preparing specification language, contact NAVFACENGCOM, Southern Division, Code 403.

Section 3: INFORMATION REQUIRED FOR DESIGN

3.1 Introduction. This section defines the data that must be developed to establish engineering design bases and to evaluate between various design and ownership alternatives.

3.2 Electrical Loads. Electric loads should be determined carefully to size electric generating plant components properly. The duration and variation of electric loads should be determined to provide inputs to required life-cycle cost analyses and for various clauses when tailoring NAVFAC guide specifications, (refer to Section 1) for procurement purposes.

3.2.1 Electric Load Determination. To determine the electric load that the plant must satisfy, utilize the load estimating data described in NAVFAC DM-4.01, Electrical Engineering, Preliminary Design Considerations. For retrofit projects, the local utility may be able to supply load duration curves from actual metering records.

3.2.2 Typical Electrical Load Curves. Figure 1 is an example of a typical electrical load curve.

3.2.2.1 Growth Curve. In Figure 1(a), note the normal trend of growth in electric demands and the additional loads (steps) when new buildings or processes are added. Development of this data and preparation of the growth curve is useful in timing additions to power plant generating capacity.

3.2.2.2 Average 24-Hour Load Curves. The average of daily electrical demands in Figure 1(b), showing 24-hour variation in seasonal demands, is very important. Such curves are useful in determining load factors, the duration of certain demands, and in dividing the total electric load among plant units. This information is a necessary factor in life-cycle cost analyses to be conducted when selecting among alternative designs and equipment configurations.

3.2.2.3 Annual Load Durations Curves. Plot the duration in hours, of each load during a year for both present and future load conditions. The type of curve shown in Figure 1(c) is useful in determining load factors and in sizing electric generating plant equipment. Information from this curve is also used in required life-cycle cost analyses. Durations of plant electric loads at full load, three-quarters load, and at one-half load is a required input for tailoring NAVFAC guide specifications.

3.3 Duty and Capacity Requirements for Electric Generating Plants. Sources and duty types of electric generating plants are defined in Section 2. Table 2 summarizes capacity requirements as related to each duty type.

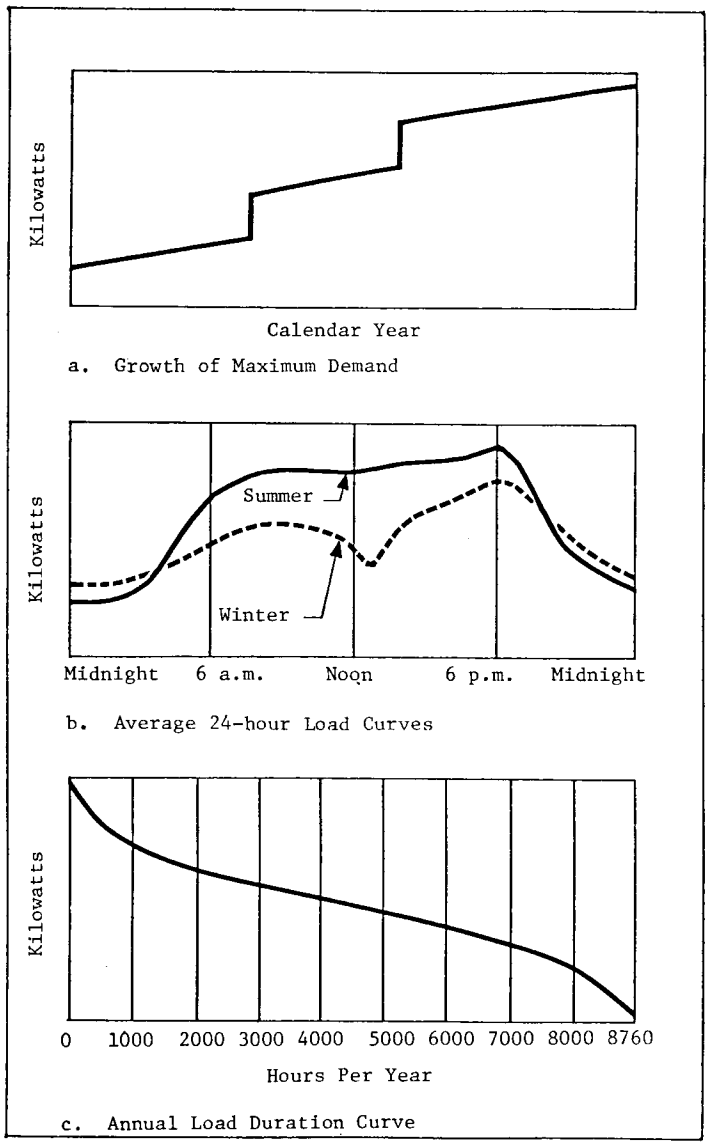

Figure 1
Typical Diesel-Electrical Generating Plant Load Curve

3.4 Plant Location Factors. Electric generating plant location should be determined after evaluating those factors summarized in Table 3.

3.5 Cogeneration Information. Design of a cogeneration system requires utility engineering and thermal load data.

3.5.1 Utility Data. Engineering data needs consist primarily of defining requirements for interconnecting with the utility grid. Rate schedules are needed for the required life-cycle cost analysis.

Table 2
Summary of Duty and Capacity Requirements

Duty Type	Duty Capacity	Capacity Provision
Prime Duty	Adequate to meet all peacetime requirements	Purchased commercial electrical power to match electric load or Prime duty electric generating plant
Standby/Emergency Duty-Standby	Adequate, when added to prime duty source, to match mobilization needs and alone to supply minimum essential electrical load in case of a prime source outage.	Purchased commercial electrical power with standby/emergency duty electric generating plant
Standby/Emergency Duty-Emergency	Adequate to supply that part of the critical load that may not be interrupted for more than 4 hours.	Standby/emergency electric generating plant

3.5.2 Loads. In addition to electrical load information, information concerning thermal loads must be developed. Table 4 summarizes thermal load considerations. High and low temperature or pressure loads should be tabulated separately.

3.6 Checklist for Facility Interfaces. Table 5 is provided as a form the designer may fill out and use for easy reference to important design parameters. Guidance for completing the form is provided in the following paragraphs based generally on criteria or data given in Section 5.

3.6.1 Engine.

3.6.1.1 Engine-Generator Set Duty. Indicate the electric generating plant duty: Prime Duty or Standby/Emergency Duty.

3.6.1.2 Number of Diesel Engine-Generator Sets. Enter the number of sets of equal generating capacity to be installed. Justification must be furnished for use of more than one size. When more than one size is to be installed, prepare a separate check list for each size and indicate on each of the forms that there are additional sheets.

3.6.1.3 Generation Rate. Indicate the design load in kilowatts per diesel-engine generator set.

Table 3
Diesel-Electric Generating Plant Design and Location Factors

Item	Sub-Item	Comments
Climate	Maximum and minimum dry bulb; maximum wet bulb temp. Heating and cooling degree days.	Affects structural and heating and ventilating criteria. Affects selection of engine auxiliaries and the rating of the generator units. Affects architectural design of the plant.
	Maximum and minimum wind velocity.	Affects heating and structural criteria.
Altitude	Height above sea level.	Affects air density, stack heights, engine ratings, pump characteristics, and auxiliary equipment ratings.
	Maximum high-water and low-water levels.	Affects floor levels, pump suction lifts and foundations.
Site orientation	Center at loads	Affects voltage drops in circuits.
	Air field	Affects stack heights and hazards.
	Docks, railroads and. roads.	Affects transportation of fuel and materials.
Water supply	Jacket and other cooling, makeup water and domestic water.	Affects water treatment and filtering requirements. Affects selection of cooling system types.
Topography	Site grades	Affects architecture and structure, and floor levels, fuel handling, and drainage.
	Soil-bearing value	Affects structural foundations.
	Water table	Affects drainage and underground pipe distribution.
	Frost line	Affects depth of water and sewer lines.
	Cathodic analysis	Affects cathodic protection requirements.
	Seismic condition	Affects type and design of structure and supports.
	Future expansion Availability	Affects allocation of space in and around plant for expansion.
Local material and labor	Availability	Affects materials of construction and operating manpower.
Local rules and regulations	Air pollution, water, sewers, and fuel storage.	Obtain permits.
Safety and security protection.		See DM-1 Series
Fuel and lubricating oil supply	Bulk and local storage, clean and dirty lube oil storage, transfer pipelines, tank truck loading and unloading facilities.	Affects plant location and orientation and site area requirements. Check local codes regarding double containment for oil storage and transfer pipelines for buried portions of system.
Plant interior	Space and access dimensions.	Affects system configuration versus component sizes.
	Building function	Affects availability of package systems and system components. Affects acoustical requirements of noise generating equipment.
Plant exterior	Architecture	Compatibility with station mission, prevalent construction materials, colors and design motif of area. Architectural screening requirements for mechanical and electrical components. Affects acoustical requirements of noise generating equipment to nearby surrounding buildings, such as sleeping quarters, hospitals, etc.

3.6.1.4 Rotational Speed. The maximum allowable rotational speed in revolutions per minute (rpm) for the duty and generator set capacity desired should be indicated in accordance with applicable criteria.

Table 4
Thermal Loads for Cogeneration Considerations

Types of Thermal Loads	Loads To Be Determined in Thousands of Btu-Per-Hour (Determine Winter and Summer Loads Separately)[1]
Condensing turbine drives	Process or plant equipment drive sizes.
Plant auxiliaries	Fuel-oil heating, feedwater heating capacity.
Export	Space heating (radiation). Use diversity factor of 1.0. Space heating (ventilation). Use diversity factor of 0.8. Utilities (hot water and laundry). Use diversity factor of 0.65. For kitchens use a diversity factor of 1.0. Refrigeration (compressor steam turbine drive). Refrigeration (absorption type). Process demands. Distribution loss.
Total present load	Total of above thermal loads.
Total ultimate load	Determine from total present load with addition of planned future loads.
Minimum continuous loads	Distribution losses.
Emergency load	Demand of services that cannot tolerate an interruption of more than 4 hours.

[1]Hours of demand for each load, multiply Btu-per-hour by 1.055 to obtain Joules-per hour.

3.6.1.5 Engine Size. Calculate the approximate engine size in horsepower (hp), based on an assumed generator efficiency of 92 percent. The resulting value is an indication of the largest engine that is likely to be provided since most generators have efficiencies of 92 percent or higher. Units of less than 100 kW may have lower efficiencies. Large units may have efficiencies of up to 96 percent. Allowance must be made for parasitic power of auxiliaries to arrive at the net generating output for each unit.

3.6.2 Fuel System.

3.6.2.1 Fuel Rate. The fuel rate depends on the particular diesel engine characteristics and the specific load which it will serve. As a rule-of-thumb, assume a fuel rate of about 10,250 Btu per kilowatthours (kWh) which represents an efficiency of about 33 percent for the diesel-engine generator set. This value should be refined as the design progresses. Data from manufacturers of qualifying equipment should be used.

3.6.2.2 Storage Tank Volume. Calculate the volume in gallons (gal) of required fuel storage based on criteria requirements for the applicable duty type and on the above fuel rate and load. Storage tank volume shall be based on total plant capacity and the load-duration.

3.6.2.3 Day Tank Volume. Calculate the day tank volume in gallons, based on criteria requirements for the applicable duty type.

Table 5
Checklist for Facility Interface

Item	Rule of Thumb or Minimum Criteria	
Engine-Generator Set Duty	(Prime)	(Standby/Emergency)
Number of Diesel-Generator Sets	_____	
Generation Rate	_____ kW	
Rotation Speed	_____ r/min	
Engine Size	_____ hp	
Fuel Rate	_____ Btu/kWh	
Fuel Rate	_____ gal/h	
Storage Tank Volume	_____ gal	
Day Tank Volume	_____ gal	
	2 cycle	4 cycle
Combustion Air	_____ ft^3/min	_____ ft^3/min
Maximum Intake Restriction	_____ inH_2O	_____ inH_2O
Exhaust	_____ ft^3/min	_____ ft^3/min
	_____ Btu/h	_____ Btu/h
Cooling Medium	_____	
Water/_____Mix	_____%/_____%	
Cooling Water Pump:		
Flow Rate	_____ gal/min	
Total Discharge Head	_____ feet	
Leaving Water	_____ degrees F	
Cooling Water Rise	_____ degrees F	
Total Heat Rejection Rate:	_____ Btu/h	
Engine Jacket	_____ Btu/h	
Lubricating Oil Cooler	_____ Btu/h	
Intercooler	_____ Btu/h	
Heat Radiated from Engine-Generator Set	_____ Btu/h	
Design Ambient Temperature:		
Outdoor	_____ degrees F	
Room, Maximum	_____ degrees F	
Maximum Rise	_____ degrees F	

3.6.3 Induction (Combustion) and Exhaust Air.

3.6.3.1 Combustion Air. Calculate the air flow rate in cubic feet per minute (cfm), using applicable data.

3.6.3.2 Maximum Intake Restriction. Obtain intake air restriction limits from diesel engine manufacturers in inches of water (inches WC).

3.6.3.3 Exhaust. Calculate the volumetric flow rate and heat loss based on applicable data and on exhaust gas temperatures available from diesel engine manufacturers.

3.6.4 Cooling Systems.

3.6.4.1 Cooling Medium. Record whether the cooling fluid is water or a mixture including water and an additive. Specify the additive and provide the mixture concentration in percent.

3.6.4.2 Cooling Water. Enter the flow rate of cooling water needed to cool the engine in gallons per minute (gpm). Also record the leaving water temperature and the temperature rise allowed for the engine. These parameters may be obtained from the diesel engine manufacturer.

3.6.4.3 Heat Rejection. The diesel engine manufacturer can provide design data concerning the rate of heat rejection from the engine jacket, lubricant cooler and from the turbocharger aftercooler.

3.6.5 Generator Room.

3.6.5.1 Heat Radiated from the Engine and the Generator. The engine manufacturer can supply the rate at which heat is radiated from the engine. A value of 7 percent may be used until more refined information is developed. Consider that most large generators have an efficiency of at least 96 percent. Utilize a 4 percent value of the generator’s kilowatt rating converted to Btu’s for the heat radiated from the generator. For smaller units increase the percent as appropriate.

3.6.5.2 Design Ambient Temperatures. The outdoor design temperature for ventilation of the generator room is found in NAVFAC P-89, Engineering Weather Data. Refer to applicable criteria to determine the inside design temperature and maximum allowable temperature rise. Outdoor dry and wet bulb design temperatures will be required for the selection of cooling towers and air conditioned spaces, and dry bulb temperatures for the selection of radiator type engine cooling.

Section 4: COGENERATION CONSIDERATIONS

4.1 Introduction. Cogeneration is the simultaneous on-site generation of electric energy and process steam or heat from the same plant. Use of heat recovery can increase overall efficiency of diesel-electric generation from around 33 percent, which is available for most diesel engine-generators, to a theoretical 75 percent. Heat which would otherwise be wasted is recovered for use in building heating, ventilating and air conditioning systems and, in special cases, to generate additional power. Process thermal loads can also be served where practicable. Guidelines for assessing the potential for cogeneration, the circumstances when it should be considered, and discussions on the types of equipment to utilize are addressed in the following paragraphs.

4.2 Design Considerations. Cogeneration applications should be considered for all new designs of prime duty diesel-electric generating plants. Cogeneration may be considered for existing plants if proven economically viable. Standby/emergency plants will rarely justify use of cogeneration, although in some cases heat recovery systems may be economical. Packaged cogeneration units may be considered for stand-alone installations; however, the system and components must comply with the applicable criteria.

4.2.1 Fuel Availability. Fuel availability should be assured for the life of the project.

4.2.2 Load Sizing Criteria. The following criteria shall be used in the design of cogeneration installations:

4.2.2.1 Electric and Thermal Loads. Electric and thermal loads should be continuous to satisfy economic criteria. Only limited fluctuations in thermal loads are permitted unless adequate thermal storage systems or standby boilers are provided.

4.2.2.2 Load Balance. The electric load should be in reasonable balance with both the heating peak and average load. The ratio of peak to average load for cogeneration installations should be in the range from 2:1 to 3:1.

4.2.2.3 Load Coincidence. Time and quantity demands for electric power and thermal energy should have a coincidence of not less than 70 percent. Coincidence is defined as the ratio of the maximum coincident total demand of a group of loads to the sum of the maximum demands of individual loads comprising the group, both taken at the same point of supply at the same time.

4.2.3 Prime Mover Sizing. Size the cogeneration prime mover for heat recovery equivalent to 50 to 75 percent of the maximum thermal load.

4.2.4 Thermal Product Properties. Design cogeneration installations producing steam and/or hot water as thermal products and to provide these products at the same pressures and temperatures as existing distribution.

4.2.5 Power Sales Agreements. Power sales agreements made with utility companies shall be in the "Surplus Sales" category wherein only the power generated in excess of facility demand is sold to the utility. Design of the facility and negotiation of the power sales agreement should reflect Navy policy which is to reduce utility costs rather than to seek profits from the private sector for cogenerating. Other arrangements are possible where all the electric power generated is sold to the utility at a price based on the utility's highest unit cost of generation and is purchased back from the utility at a cost lower than that at which it was sold. These types of arrangements should be explored for commercial ownership options as covered in Section 2.

4.2.6 Site Adaptability. Building, site, and facility utility systems must be compatible with adaptation required to accommodate cogeneration equipment. Adequate space must be available. For large plants, a minimum of 5,000 sq ft (465 sq m) to 7,000 sq ft (650 sq m) should be allocated in preliminary planning stages.

4.2.7 Electric Utility Grid Interconnection.

4.2.7.1 United States Locations. The local utility must allow cogenerators to interconnect with their supply grid.

4.2.7.2 Foreign Locations. Situations in foreign locations must be determined individually. Where such interconnections are not allowed, it may be possible to isolate various loads for a dedicated cogeneration facility.

4.2.8 Grid Protection Requirements. Grid protection/interconnection equipment and ownership requirements vary depending on the Power Sales Agreement negotiated with the utility. The local utility should be contacted very early in the design concept stage because requirements differ significantly. Utility companies may provide assistance in planning facilities.

4.3 Heat Recovery Applications. Heat recovery is the process of extracting heat from the working medium or mediums, such as diesel engine exhaust gases, and transferring this heat to a source of water, air, etc.

4.3.1 Sources of Waste Heat. Heat may be recovered from engine jacket and lubricant cooling systems and from the exhaust gases. Table 6 indicates the potential for product heat recovery from each source. Theoretically, all of the jacket and lubricant cooling water heat can be recovered; practically in most cases only about one-half will be reclaimed to provide useful work. Although applications are limited, direct use of the exhaust gases for product drying, etc., can increase overall efficiency about 12 percent.

Table 6
Summary Heat Balance: Cogeneration Using
Diesel-Engine Generators

Item	Without Cogeneration (Percent of Fuel Input)		With Cogeneration (Percent of Fuel Input)		
	Useful Work	Losses	Useful Work	Heat Recovered	Losses
Diesel Engine/Generator Set	33		33		
Jacket and Lubricant Cooling Waters		30		15	15
Exhaust Gas		30		12	18
Radiation Losses		7			7
Totals	33	67	33	27	40
Overall Efficiency	33		60		

4.3.2 Design Priority. The first responsibility of the jacket and lubricant cooling system design shall be to cool the engine; heat recovery equipment is of secondary importance. Silencing the engine is also of secondary importance unless the engine is located outside the building close to a quiet zone, e.g., sleeping quarters. All heat recovery installations should provide alternate, conventional systems to reject heat from jacket and lubricating oil cooling media (see Figure 2).

4.3.3 Heat Recovery from Jacket and Lubricant Cooling Systems.

4.3.3.1 Hot Water Systems. Recovery of waste heat from jacket coolant is the preferred method of heat recovery. Heat recovery from the lower temperature and flow of lubricant coolant may also prove economically justified. Heat is recovered via heat exchangers to secondary loops (see Figure 2). The engine coolant loop must be a closed system. Recovery of heat from lubricant oil coolers is accomplished in the same fashion. These hot water systems can be combined with an exhaust gas heat recovery boiler into an integrated system.

4.3.3.2 Steam Systems. Jacket coolant leaving the engine is piped to a heat recovery boiler. The reduced pressure in the boiler and in piping to the boiler allow jacket coolant to flash to low pressure steam. Steam is returned from process uses to the engine coolant inlet as condensate. Pressures must be controlled and engine cooling system must be carefully designed to prevent boiling or flashing within the engine. A static head and controlled steam pressure system is preferred over a pressure-reducing valve or an orifice at the boiler inlet.

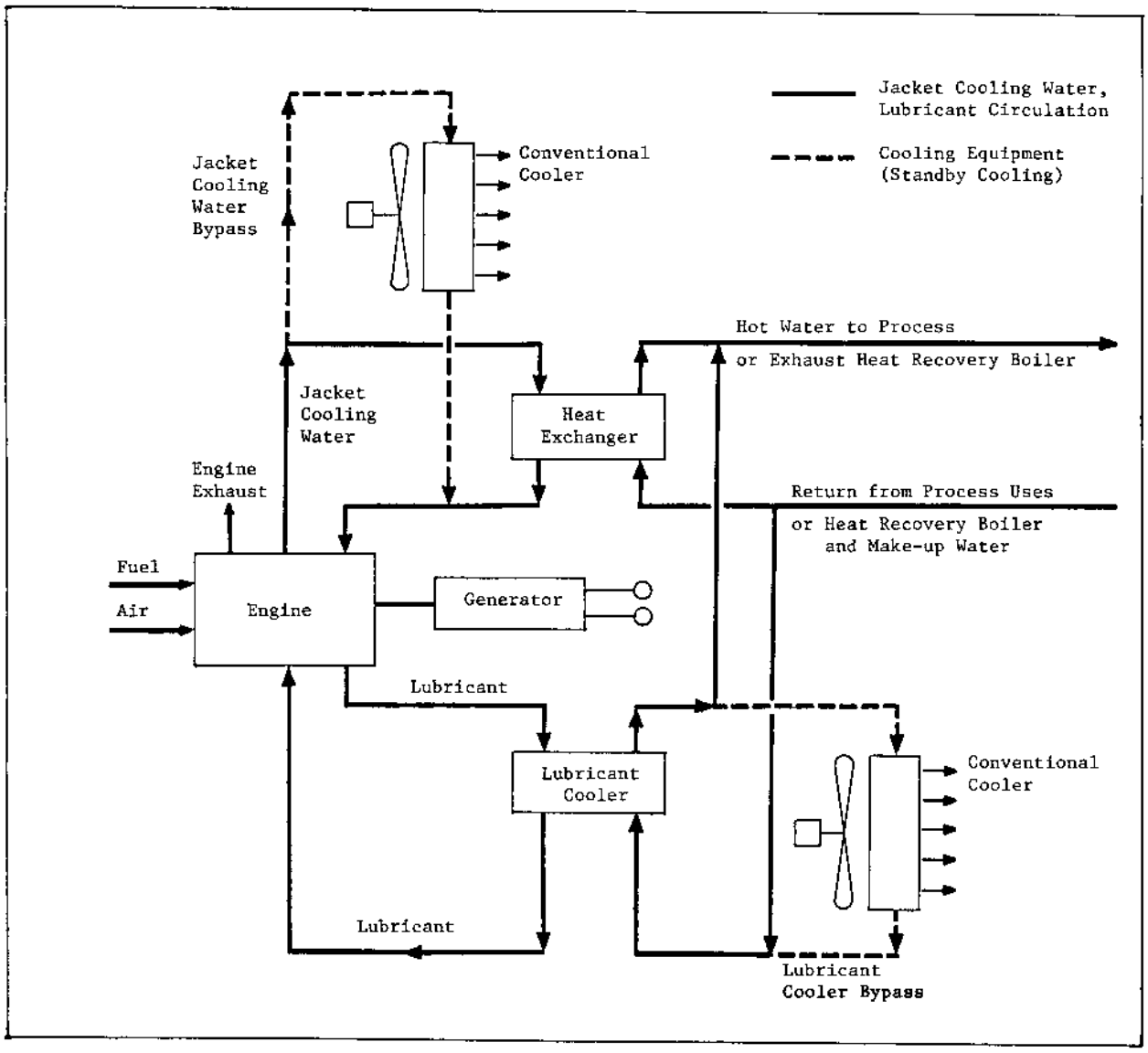

Figure 2
Heat Recovery System

4.3.3.3 Ebullient Systems. In ebullient cooling, a steam and high-temperature water mixture are moved through the jacket by natural circulation to a steam separator above the engine. Engine jacket water circuits must be designed specifically for this type of cooling. The engine manufacturer shall approve its use in writing. Ebullient cooling including exhaust gas heat recovery s depicted in Figure 3. An auxiliary boiler is not required, nor is a jacket cooling water circulation pump normally required. An auxiliary boiler may not be needed when an exhaust gas heat recovery boiler is used in conjunction with ebullient cooling because a direct-fired section can be added to the heat recovery boiler. The use of ebullient cooling systems must first be approved by NAVFACENGCOM Headquarters.

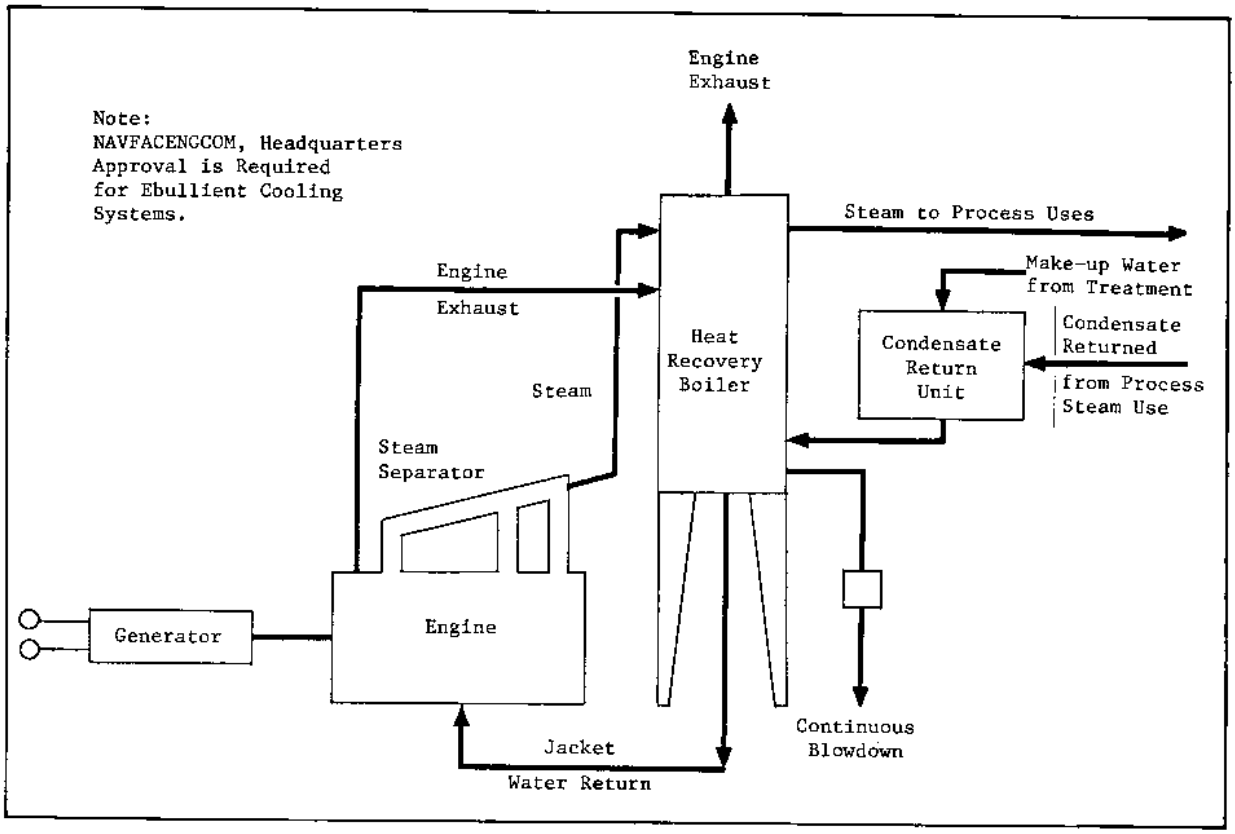

Figure 3
Ebullient System

4.3.4 Exhaust Gas Heat Recovery. Exhaust gases discharged from diesel generators range in temperature up to approximately 600deg. F (316deg. C) at full load. The temperature depends on the size of the unit, the fuel used, and the combustion cycle (i.e., 2 or 4 stroke engines). Larger engines operate at lower temperatures. Exhaust gas recovery systems include the following:

a) Heat is recovered in the form of hot water or steam in a heat recovery boiler which also acts as an exhaust silencer. These devices are often referred to as "Heat-Recovery Silencers." Heat recovery boilers receiving exhaust gas shall be designed to run dry when there is no thermal load. Diverter valves shall not be used.

b) Hot water cogeneration is often preferred over steam systems. Advantages include ease of process control, independent of operating temperatures which are critical for low pressure/temperature steam cogeneration.

c) Some process configurations use heat recovered from jacket and lubricant cooling systems to preheat heat-recovery boiler feedwater and fuel oil.

d) Combined cycle applications are often used to generate additional power and to produce hot water or to lower steam pressure for usage.

4.3.4.1 Supplemental Firing. Supplemental firing is not recommended for most diesel engine exhaust gas heat recovery systems. Supplemental firing a heat recovery boiler is more often considered in combustion turbine/generator applications. Supplementary boilers may be considered to accommodate thermal demands in excess of heat recovery boiler capacity. Thermal storage should also be considered.

4.3.4.2 Combined Cycle Applications. Combined cycle cogeneration using a back-pressure steam turbine-generator is shown in Figure 4 and includes the following:

a) Steam product from the heat recovery boiler is expanded through a back-pressure steam turbine to generate additional power. The back-pressure turbine exhaust is used for heating, ventilating and air conditioning applications or for other uses of low pressure steam.

b) Condensing steam turbines may be used to generate larger amounts of power than are available from back-pressure turbines.

c) A technology that appears promising or combined cycle applications is the organic Rankine cycle. Relatively low temperature exhausts from diesel-engines limit combined cycle applications of steam turbine-generators. Substitution of an organic liquid, e.g., toluene, in place of water for the working fluid allows a bottoming cycle of higher efficiency than a similar steam system to be employed.

4.3.5 Thermal Storage. The need for supplemental boilers may be obviated by using thermal storage systems. Engine and heat recovery equipment are sized to meet thermal loads somewhere between the minimum and peak demands. Hot water, and/or chilled water are pumped into separate storage tanks during periods of low thermal demand. During periods of higher demand, hot and chilled water are pumped from storage. The engine-generator set is run at a constant load. The utility grid operates as a sink for electric generation in excess of facility demand. Several utility companies in the United States now offer funding assistance for installing thermal storage systems. Refer to NAVFAC DM-3.16, Thermal Storage, for design guidance on these systems.

4.3.6 Uses for Recovered Heat.

4.3.6.1 Hot Water. Hot water is produced in the range of 190deg. F (88deg. C) to 250deg. F (121deg. C) in jacket and lubricant cooling systems. Higher temperature water is attainable from exhaust gas heat recovery boilers. End uses of this hot water may include:

a) hot water for space heating applications,

b) domestic hot water heating,

c) commercial (dinging facility, laundry, etc.) hot water heating,

d) fuel oil preheating,

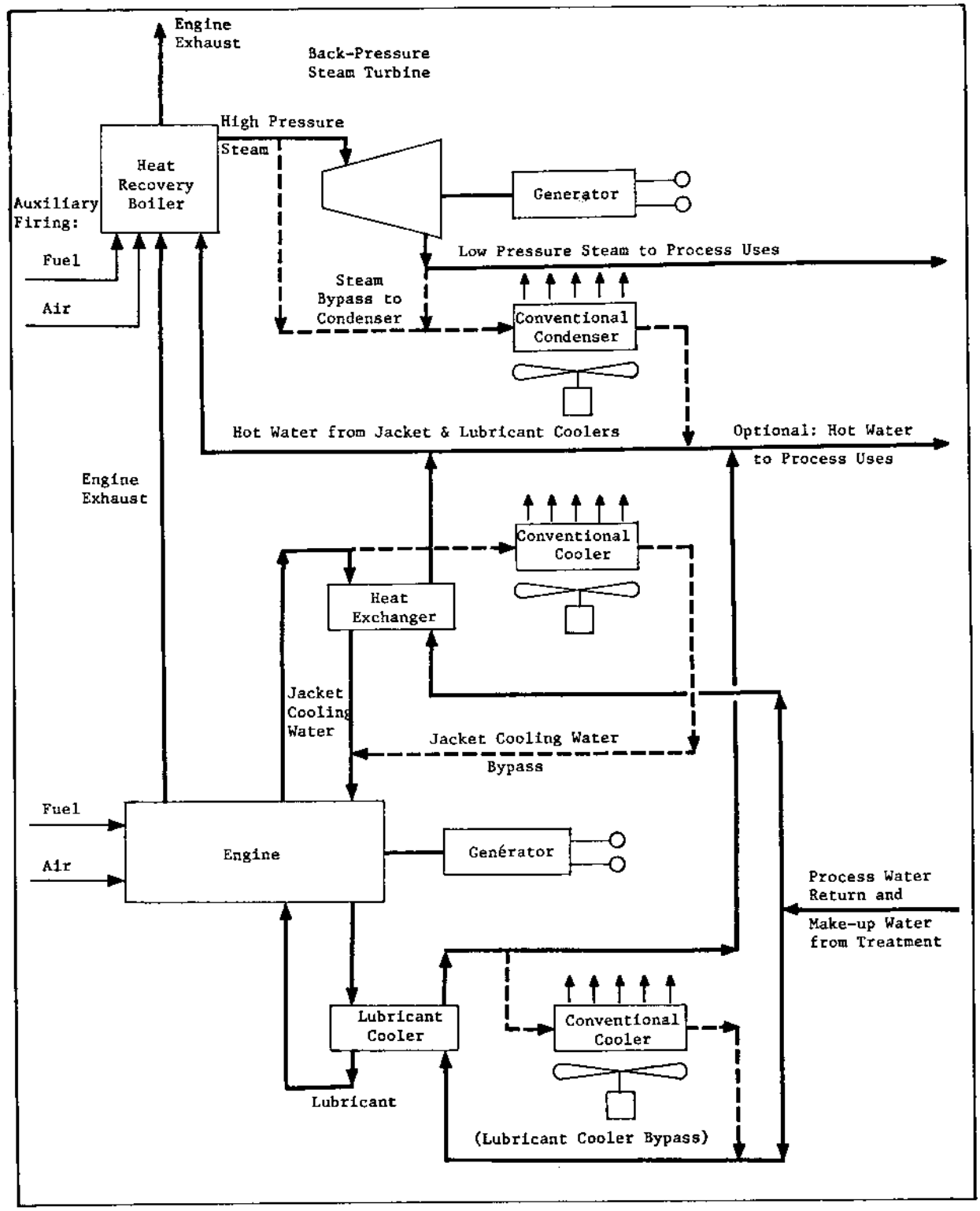

Figure 4
Combined Cycle Operation

e) sewage treatment plant sludge digester heating (engine fired on digester gas), and

f) process heating and hot water use.

g) high temperature hot water heating (and district heating) systems,

h) absorption chillers, and

i) additional power generation.

4.3.6.2 Steam. Steam, measured in pounds per square inch (lb/in^2) or kilograms per square centimeter (kg/cm^2) is produced in heat recovery boilers and is usually generated at about 125 lb/in^2 (8.79 kg/cm^2) for larger systems. It is possible to generate steam at higher pressures; however, the highest operating steam temperature is limited to about 100deg. F (38deg. C) below the exhaust temperature. The most cost-effective steam conditions for heat recovery may be saturated 15 lb/in^2 steam (1.05 kg/cm^2). Care must be taken in design of heat recovery systems to insure that the exhaust temperature is above the dew point. This usually limits the minimum exhaust temperature to between 300deg. F (148deg. C) and 350deg. F (177deg. C). Economic analysis of design options will assist in selecting the best configuration. Some of the uses for cogeneration steam are:

a) steam heating systems,

b) hot-water heating systems (through heat exchangers),

c) absorption chillers,

d) steam turbine drive and combined cycle applications (such as compressor or generator drives),

e) back pressure turbines with steam exhausted to other uses,

f) condensing turbines with condensate cycled back to heat recovery boiler feedwater, and

g) process steam uses.

Section 5: DEFINITIVE DESIGNS FOR DIESEL-ELECTRIC GENERATING PLANTS

5.1 Definitive Diesel-Electric Generating Plants. The Navy has several definitive designs and guide specifications for both prime duty and standby/emergency duty stationary diesel-electric generating plants. Duty types are defined defined Section 2. Application of each definitive design and guide specification to various engine-generator set sizes is provided in Table 1 and definitive design inspection 1. Rotational speed and Break Mean Effective Pressure (BMEP)limits are? summarized in Table 7 for various unit generator sizes and duties.

Table 7
Recommendations -- Unit Sizes, Maximum Rotational Speeds and Break Mean Effective Pressure

Engine Class	output Specified	Maximum Rotational Speed (r/min)	Maximum Break Mean Effective Pressure (lb/in^2) Two-Stroke Naturally Aspirated	Two-Stroke Turbocharged Aftercooled	Four-Stroke Turbocharged Not Aftercooled	Four-Stroke Turbocharged Aftercooled
Prime Duty	10 kW to 300 kW	1800	90	105	135	165
	301 kW to 500 kW	1200	--	--	135	170
	501 kW to 1500 kW	900	90	120	--	180
	1501 kW to 2500 kW	720	90	130	--	200
	2501 kW and larger	514	--	--	--	225
Standby/ Emergency Duty	10 kW to 300 kW	1800	90	115	150	185
	301 kW to 1000 kW	1800	90	120	--	200
	1001 kW to 2000 kW	1200	--	130	--	220
	2001 kW to 3000 kW	900	90	140	--	260

5.1.1 Modifications to NAVFAC Definitive Designs. Definitive designs should be considered only as a basis for design from which variations maybe made. Many alterations to meet the specific site requirements or local conditions are covered by general notes in applicable NAVFAC tide Specifications which are listed in Section 1.

5.1.2 Matching Definitive Designs to Load Demands. Develop design concepts that satisfy electric loads in the most economic manner. Select the definitive design with necessary modifications in accordance with the best design concept. Use economic analysis methodology as addressed in Section 2 in accordance with life-cycle cost analysis methodology in NAVFAC P-442, Economic Analysis Handbook. Evaluate all plausible deviations from the selected definitive design using the same economic analysis methodology. However, NAVFACENGCOM Headquarters approval will be required for all designs deviating radically from the definitive design.

5.1.3 Definitive Design Plant Capacities. Definitive designs provide for three initial engine-generator bays for prime duty and two initial bays for standby/emergency duty plants. A future engine-generator bay is indicated for all designs. Most plants will need to be expanded to satisfy future electric loads. The definitive designs provide only for a single operating unit; additional units are required to meet NAVFACENGCOM minimum reliability needs. Provision of a single operating unit is not usually economical. Selection of unit capacities must consider varying electric demands. Plant capacity must be selected to satisfy reliability criteria once the unit capacity has been established.

5.2 Criteria for Unit and Plant Capacities.

5.2.1 Number of Units. The number of units selected for any plant should provide for the required reliability and flexibility of plant operations. The minimum number of units needed to satisfy these requirements usually results in the most economical and satisfactory installation. Utilization of different sized engine-generator units in a plant must be authorized by NAVFACENGCOM Headquarters.

5.2.2 Reliability. Spare units are required to ensure system reliability. Minimum reliability requirements are related to duty types and criticality of loads.

5.2.2.1 Prime Duty. Two spare units are required, one for scheduled maintenance and one for standby or spinning reserve.

5.2.2.2 Standby Duty. One spare unit is required for scheduled maintenance. Another unit may be required for spinning reserve when justified.

5.2.2.3 Emergency Duty. No spare is required in Continental United States (CONUS); one spare unit is required for plants outside of CONUS.

5.2.3 Flexibility. To provide for future growth, the firm capacity (total capacity less spare capacity) shall be no less than 125 percent of the maximum estimated electric demand. For an economical operation, individual generating units should be operated at least 50 percent of their rated capacities to satisfy minimum or average demand. Consider providing a split bus (tie circuit breaker) to permit partial plant operation in the event of a bus failure.

5.3 Selection of Unit Capacity. An example of individual unit capacity sizing based on meeting unit and plant capacity criteria is shown on Table 8. Generally, utilize the National Electrical Manufacturers (NEMA) MG 1, Motors and Generators, standard sizes. Notice that the largest unit size was selected in the example. Other factors, however, such as the type of load served may affect optimal unit sizing.

Table 8
Example of Individual Generating-Unit Capacity Sizing 1

System Parameters					
Estimated Demands: Maximum = 2,400 kW Average = 1,500 kW Minimum = 600 kW		Firm Capacity Required: 2,400 kW x 1.25 = 3,000 kW			
Unit Rating Size Range					
Maximum engine-generator unit size to supply minimum demand at 50 percent capacity = 600 kW/50 percent = 1,200 kW[2] Minimum engine-generator unit size to supply minimum demand at 100 percent capacity = 600 kW					
Comparisons of Available Unit Capacities					
Unit Size, kW	600	700[3]	800	900[3]	1,000
Firm Capacity, kW	3,000(5)[4]	3,500(5)	3,200(4)	3,600(4)	3,000(3)
Operating Unit Loading Comparison					
Maximum Demand	5 at 100%		4 at 93%		3 at 100%
Average Demand	3 at 83%		2 at 94%		2 at 75%
Minimum Demand	1 at 100%		1 at 75%		1 at 60%
Select 1,000 kW unit capacity for fewest number of units.					
For a prime duty plant: Initial Firm Capacity = 3,000 kW (3)[4] Total Initial Capacity = 5,000 kW (5)					

[1]Using NEMA MG 1 standard ratings.
[2]Not a NEMA MG 1 standard rating.
[3]No values shown, since there is no improvement over the next smaller engine generator unit size.
[4]Number in parenthesis is the number of engine generator units required.

5.3.1 Ability to Serve Load Under Abnormal Conditions. Prime duty generating units are rated at 100 percent of their capacity and are also capable of generating at 110 percent capacity for 2 hours out of any 24-hour period. Standby/emergency duty units are also required to have a continuous rating, but are not provided with any reserve capacity. To prevent the loss of an operating unit in system collapse, even one having reserve capacity, proper load shedding or spinning reserve backup must be provided.

5.3.2 Load Shedding. Load shedding (electrical load segregation to allow dropping of less critical loads) is preferable to loss of an entire plant.

5.3.3 Spinning Reserve. Where critical loads cannot be shed, spinning reserve is required for backup in the event that a unit is lost from the system. Spinning reserve must provide for shutdown of one unit when operating at maximum demand and with generators running at their maximum 2-hour capacity.

5.3.4 Type of Load Served. Motor loads may affect unit sizes, either because of other voltage-sensitive loads or because of the size of the motor in relation to unit size.

5.3.4.1 Voltage-Sensitive Loads. Communication, data processing, and other voltage-sensitive loads should be segregated from all motor and other types of utility loads by providing a split-bus system.

5.3.4.2 Size of Motors. Starting large motors will have an effect on generators because the starting kilovoltamperes (kVA) of a motor is about three to eight times its running kVA. Design motor starting loads to prevent voltage dips which are significant enough to cause the system to shut down. Reduced-voltage starters and sequential starting of motors are usually provided to prevent unacceptable voltage dips. A unit supplying a single motor may have to be evaluated to determine the cost-effectiveness of special generator starting modifications, use of shunt capacitors, or oversizing of generators.

5.4 Fuel Selection.

5.4.1 Fuel Types. The fuel for diesel engines may be any of the following types, depending on availability and economics:

a) Grade Navy Distillate DF-2 Diesel Fuel Oil of Federal Specification VV-F-800, Fuel Oil, Diesel.

b) Marine Diesel of Military Specification MIL-F-16884, Fuel Oil, Diesel Marine.

c) Jet Fuel Grades JP-4 and JP-5 of Military Specification MIL-J-5624, Jet Fuel Grade JP-5. Diesel engines may require special metallurgy to accommodate the use of JP-4 or JP-5 on a continuous basis. accommodate the use of JP-4 or JP-5 on a continuous basis.

d) Arctic Grade DBF-800 of Federal Specification VV-F-8001.

e) Jet (commercial) fuel.

5.4.2 Nondiesel Fuels. The use of a nonstandard fuel such as natural gas, liquid petroleum gas, residual oils and gasoline may be allowed if economic advantages are proven through a detailed life-cycle cost economic analysis. NAVFACENGCOM Headquarters approval is required for the following fuel selections:

a) Gaseous Fuels. Follow guidance and requirements of OPNAVINST 4100.6, Energy Financing and Source Selection Criteria for Shore Facilities, which restricts the use of natural gas. Dual fuel (diesel oil and gas firing) shall be provided whenever an interruptible gas supply is used.Diesel fuel is required as a pilot fuel when gas is used as a fuel.

b) Residual Fuel Oil. Federal Specification No. 6 or Navy Special may be used in Design 2 (see Table 1) plants when economically justified and approved by the NAVFACENGCOM Headquarters.

c) Reclaimed Fuel Oil. Fuel oil reclamation facilities are available at a number of sites. Reclaimed fuel oil is acceptable for use in some diesel engines and may be considered.

5.4.3 Fuel Characteristics. For properties and characteristics of various fuels, refer to NAVFAC DM-22, Petroleum Fuel Facilities, Chapter 1. For collateral reading see "Fuels and Furnaces" in Marks Standard Handbook for Mechanical Engineers.

5.4.4 Bid Evaluation and Compensatory Damages for Prime Duty Plants. The NFGS specifications (refer to Section 1) for diesel-electric generating plants incorporate procedures to evaluate bids and to recover damages in the event that the engine-generator provided does not perform as guaranteed by the supplier. Both procedures rely on guaranteed fuel rates and a schedule specified by the Navy for operations at full load, three-quarters load, and at half load. These procedures are as follows:

a) Bids are evaluated based not only on initial cost but also on the ability of the proposed equipment to meet Navy specified goals of fuel rate at each load condition. Bid prices quoted are adjusted for comparison whenever guaranteed fuel rates do not meet the goals. The adjustment includes the cost of fuel needed in excess of that required, based on guaranteed fuel rates. The total excess cost of fuel for a period of 10 years is used as the adjustment. Fuel rate goals should be set slightly higher than any prospective engine-generator set can meet. Thus, all contractors will have their contracts adjusted, because the manufacturer's rates will be lower than the proposed unrealistic value. This allows a positive fuel comparison for all bidders.

b) Acceptance tests of engine-generator units in prime duty plants are conducted to determine if guaranteed fuel rates have been achieved at each load condition. In the event that guaranteed fuel rates are not verified, the supplier is required to refund the difference in fuel cost over a projected economic life of 10 years. Damages are calculated based on the operating schedule entered into the specification.

5.4.5 Fuel Storage and Handling.

5.4.5.1 Fuel Flow Diagrams. Fuel flow diagrams for each definitive design are included in NAVFAC P-272, Definitive Designs for Naval Shore Facilities, Part II (refer to Section 1).

5.4.5.2 Fuel Preparation. Diesel engine fuel injection systems can be seriously damaged by water and dirt in the fuel. It is important to provide

fuel oil centrifuging of all fuels delivered by water transport as fuels can be easily contaminated with water or solids. Provide heating for heavy fuel oils, and in cold climates for all fuels. Filtration shall be provided for all types of fuel. Comply with applicable state and local regulations concerning storage and treatment of fuels.

5.4.5.3 Conversion Fuel. On prime duty, Design 2 plants, provide additional space for installing future additions to the fuel handling equipment, for example, fuel storage for residual fuel and pilot diesel fuel if required, plus residual fuel heaters and centrifuges, dirty fuel tanks and similar items.

5.4.6 Fuel Storage and Day Tank Volumes. Use above-ground storage tanks within diked areas. Provide 30-day storage capacity for prime duty plants and 7-day storage for standby/emergency duty plants unless local conditions will allow less or require greater volume. Storage tank volume shall be based on the rate of fuel consumption of all engines including spares, at 100 percent load, multiplied by a 0.75 operating factor. Tanks should be selected in standard manufactured sizes and should be vertical or horizontal, as best suits the site conditions. The use of underground storage tanks may be considered for small plants if leak detection and double containment provisions are provided. Day tank volumes shall be determined based on the following:

5.4.6.1 Prime Duty Plants. Provide a day tank for each engine with storage for not less than 2 hours full load operation and with automatic transfer pumps and level controls.

5.4.6.2 Standby/Emergency Duty Plants in Standby Service. Provide manually-filled day tanks, each of a capacity able to satisfy 8 hours of full load operations.

5.4.6.3 Standby/Emergency Duty Plants in Emergency Service. Provide a day tank and transfer pump unit for each engine, as recommended by the engine manufacturer. Interior tank capacities shall not exceed the requirements given in the National Fire Protection Association (NFPA) No. 37, Stationary Combustion Engines and Gas Turbines.

5.4.6.4 Bulk Fuel Storage and Handling. Storing and receiving of fuel oil outside the generating plant is covered in NAVFAC DM-22 and in the definitive designs and guide specifications of the oil-fired definitive power plants listed in NAVFAC P-272, Part II, which includes handling the fuel in plants. For rules and regulations, refer to NFPA No. 31, Oil Burning Equipment.

5.4.7 Air Intake Systems. Use an outdoor air intake for all prime and standby/emergency duty plant designs, except for very small units in warm climates. Intake velocities and pressure drops should be selected in keeping with engine limitations. In frigid temperature zones, air preheating, or a bypass of outside air sources should be provided to facilitate engine starting. Four-stroke engines require approximately 3 to 3.5 cfm of free air

per brake horsepower (bhp) (1.8 to 2.2 liters per second per kW). Two-stroke engines require approximately 4 to 5 cfm per bhp (2.5 to 3.1 liters per second per kW).

5.4.8 Precooling and Aftercooling. Precooling of intake air is not allowed. Aftercooling, sometimes referred to as "intercooling" of intake air after turbocharging is desirable. Sufficient coolant should be made available at the required temperature. Standby/emergency duty and prime duty generator units may utilize separate electric motor driven pumps; however, engine-driven pumps are preferred, with standby motor-driven pumps available.

5.4.9 Engine Exhaust Systems.

5.4.9.1 Exhaust Silencers. Heat recovery silencers should be considered for all prime duty installations. Recovered heat can be used for space heating. When residual fuel oil is to be used in Design 2 and 4 plants (see Table 1), it may be heated using hot water from heat recovery silencers. Refer to Section 4 for additional guidance on exhaust heat reclamation and cogeneration potential.

5.4.9.2 Exhaust Gas Quantities. Exhaust velocities and pressure drops should be selected to match engine requirements as provided by the engine manufacturer. Whenever manufacturer’s data is not available, base system and piping component sizing on approximately 8.4 cfm of exhaust per bhp (5.3 liters per second per kW) for four-stroke engines and on 13 cfm per bhp (82 liters per second per kW) for two-stroke engines.

5.4.9.3 Exhaust Connections. The use of flexible connections at connections to the engine exhaust outlets or turbocharger exhaust outlets should be included to eliminate excessive structural stresses on those units. Exhaust system structural supports, expansion joints and anchors for exhaust system movement, and expansion and contraction due to heat, must be considered and provided in the plant design. Silencers should be mounted outside the building as indicated on the Definitive Design Drawing operating floor plans, unless the manufacturer’s standard unit is provided with an attached silencer or other special design considerations dictate otherwise at a specific site.

5.4.10 Cooling Systems. Decide by economic analysis and site conditions whether radiator, cooling tower, or a natural circulating water system should be used. Where cooling systems are subject to freezing temperatures, cooling systems must be protected during operation and when shut down. Freeze preventing solutions (such as glycol or Dowtherm) should be considered for circuits exposed to freezing outdoor ambient temperatures. In severe freezing conditions, it is desirable to separate the interior and exterior circuits by means of heat exchangers in addition to the use of antifreeze solutions. When these solutions are used, equipment and piping will require care in design and selection due to the lower specific gravity (and specific heat) of the antifreeze solutions as compared to water. Higher pumping rates will require larger piping systems and more heat exchange surface areas. Refer to the engine manufacturer for their specific recommendations relative to jacket coolant and lubricant cooler temperature control and fluid requirements.

5.4.10.1 Ebullient Cooling. Ebullient cooling may be used if an economic advantage can be demonstrated. The use of steam must be continuous and cannot replace heat recovery from jacket coolant or heat recovery silencers. Selection of ebullient cooling requires NAVFACENGCOM Headquarters approval. (Refer to Section 4 for ebullient cooling applications and limitations.)

5.4.10.2 Selection Guidance. Outside cooling units shall be carefully sited and oriented so as to minimize the effect of prevailing winds and adjacent structures on the equipment cooling capacity. Vertically discharging radiators and cooling towers should be given preference over other types and configurations. Where ambient air temperatures are favorable, the use of radiator (dry) type cooling will reduce maintenance costs and water treatment requirements. Engine radiant heat and generator heat must be removed by the building ventilation system. Sufficient ventilation shall be provided to limit temperature rise to 15deg. F (9deg. C) above ambient wherever possible. Refer to Section 15 for minimum ventilation requirements.

5.4.10.3 Design Temperature. Outside ambient temperatures given in design guides such as NAVFAC P-89, Engineering Weather Data; are usually not peak temperatures. Their use in the selection of cooling equipment such a radiators for engines may not be adequate as peak electrical loads can occur at the same times as those of maximum temperature. It is recommended that summer design dry bulb temperatures be increased by 10deg. F to 15deg. F (6deg. C to 9deg. C) over the design temperature listed in NAVFAC P-89. In no case should the design temperature be less than 110deg. F (61deg. C). Incalculable factors such as wind direction and eddies, unusual weather conditions, and other causes of air recirculation through a radiator or cooling tower, can only be incorporated into plant design by such means.

5.4.11 Lubricating Oil Systems. The lubricating oil system should include clean and dirty oil storage tanks, transfer pumps, piping for transfer and unloading, filters and operating control systems. Storage tank size needs vary for unit and plant sizes. Sufficient supplies of lubricating oil shall be provided so that a delay in delivery will not impair plant operation. Oil storage tank volumes shall be based on the engine manufacturer’s oil consumption data for the specific engines involved with all engines in the plant including spares, operating at 100 percent load multiplied by a 0.75 operating factor. Containerized storage is allowed for both clean and dirty oil storage on smaller sized standby/emergency duty generating plants.

5.4.11.1 Lubricating Oil Filters. Engines are normally supplied with lubricant filters, pumps, and coolers by the engine manufacturer. If they are to be supplied separately, they should conform to the engine manufacturer’s specifications. Each Design 1 to Design 4 engine should be fitted with a duplex full-flow filter. Design 4 standby/emergency plants shall always be provided with a bypass-type oil filter. Bypass filtering may not be economically justified for the smaller Design 3 plants. Strainer mesh size shall conform to the engine manufacturer’s standard practice.

5.4.11.2 Warm-Up Systems. All engines should be fitted with jacket coolant, and in some cases lubricant oil warm-up systems, as recommended by the engine manufacturer when operating temperatures warrant. The lubricant warm-up system is usually required on standby/emergency units.

5.4.11.3 Lubricant Pumps. Normally, main lubricant pumps are mechanically driven from the engine. Warm-up and bypass filter pumps may be driven separately with electric motors.

5.4.11.4 Waste Oil. Provisions must be made for removing and holding waste oil from the generating plant.

5.4.11.5 Special Lubricant Treatment. For prime duty plants, lubricating oil should be reclaimed by removing dilutants and insoluble contaminants. Acidity should be controlled by means of a combination absorption and vaporizing process, and possibly centrifugal purifiers and clarifiers in either a batch or continuous operation. Packaged reclaiming systems designed specifically for this purpose are available. The heat source for these systems can be from direct fired equipment, reclaimed heat, or electric power. Provisions must be made for the removal of waste solids from these systems. All diesel-electric plants using heavy fuel oil or blends of heavy and light oils should be provided with lubricating oil reclaiming systems. Lubricating oil treatment systems shall be of the type approved by the engine manufacturer and suitable for the type of lubricating oil recommended by the engine manufacturer. Some types of treatment remove desirable additives required by the engine manufacturers, and removal of these additives may nullify engine manufacturer’s guarantees.

5.4.12 Starting Systems.

5.4.12.1 Air Starting. The method used for starting shall be the standard design of the engine manufacturer. Direct injection of compressed air into cylinders is the preferred method of starting large diesel engines in prime duty and standby/emergency duty plants. Air motors are optional for smaller units. Where engine size requires the use of more than one starting air motor as indicated by the manufacturer’s standard instruction, the extra motors, controls and assembly shall be provided as part of the engine package.

5.4.12.2 Compressors for Air Starting. Where compressed air is used for starting, two starting-air compressor units should be provided. One unit should have an electric-motor drive, and one unit should have a dual electric-motor/diesel-engine drive with battery start for the engine drive.

5.4.12.3 Starting Air Receivers. Where air starting is to be used, air receivers shall be sized to provide multiple starts based on the following:

a) For prime and standby duty plants with 2 engines, a minimum of 3 starts shall be provided for each engine. This requires a minimum of 6 starts. For each additional engine air receiver capacity shall be added to provide 3 starts for each engine added up to a total of 12 starts. One receiver should be sized to provide a minimum of 3 starts for the largest unit installed.

b) Receivers shall be manifolded in parallel, each with safety valves, isolating and flow check valves, and automatic condensate drain trap assemblies. For normal operating each engine has its own starting air tank so that unsuccessful start of a specific engine does not deplete the

available compressed air. However under emergency conditions, the manifold allows for alternate supply from other tanks to the engines.

c) Starting air pressure shall be as recommended by the engine manufacturer. Normal starting air pressure is 250 lb/in^2 (17.5 kg/cm^2), with a 300 lb/in^2 (21.0 kg/cm^2) design pressure.

d) Receiver construction shall conform to American Society of Mechanical Engineers (ASME) SEC 8D, Pressure Vessels, for the system pressures involved.

5.4.12.4 Electric Starting. In standby/emergency duty plants serving emergency loads and where compressed air will normally not be provided, electric starting using batteries may be employed if standard with the engine manufacturer. Electric starting batteries shall be furnished to provide the same starting capacity as is required for air starting receiver capacity. Batteries shall be heavy duty type complete with battery racks, cabling, chargers, meters, hydrometers and controls as recommended by the engine starter and battery manufacturers.

5.4.12.5 Preheat System for Testing Standby/Emergency Duty Units. Consider providing engine coolant and lubricating oil preheating systems to facilitate scheduled tests of generator sets.

5.4.13 Foundations. Diesel engine-generator unit foundation design must take into account the dynamic characteristics of the soil (refer to NAVFAC DM-7.01, Soil Mechanics) and machinery characteristics to avoid resonance of the foundation with the operating equipment. Investigation of these characteristics often results in inexact data and thus requires field adjustments to the design. The design guidelines given herein should be considered minimums to be adjusted to meet actual requirements. Consult NAVFAC DM 7.02, Foundations and Earth Structures, for further discussion of vibration problems and examples of design to avoid resonance and for shock and vibration isolation.

5.4.13.1 Investigation. The following investigations are necessary for units larger than 750 kW, and elsewhere, where special conditions indicate such a need:

a) Soil Characteristics. Dynamic properties vary widely and can be defined only roughly within rather wide limits. Each type of soil, sand, gravel, clay, rock, and the degree of moisture saturation of the soil provides a different and widely varying response to dynamic loads. Size of bearing area and its dimensions may also influence dynamic properties of the soil.

b) Machinery Characteristics. The equipment manufacturer usually provides estimated values based on equipment dimensions, eights, and operating speeds which may not furnish precise values. Beyond the usual static data, it is necessary to have such data as the unbalanced forces and couples with their location, magnitude, and direction (both primary and secondary); plus starting torque and stopping torque, without load and with full load on the generator.

5.4.13.2 Design. As a design basis, a designer uses data regarding soil and

machine characteristics which may be considered as approximate rather than precise. In many engineering problems which defy an exact analysis, a safe design may be assured by the use of a greater factor of safety. In the field of machinery foundation design, this approach may ensure structural adequacy but not necessarily dynamic stability. Normal differences between the predicted and actual characteristics of the soil and machinery may have adverse effect upon the characteristics which might destroy or wipe out expected design margins. The foundation characteristics may be further affected by deviations in actual construction from the details specified by the foundation designer. The designer should include provisions for field testing and adjustment of foundation mass in cases where design studies indicate a possible deficiency in design margins. This may be accomplished by making the bottom base slab extend outside the main foundation block. The dynamic stability may then be checked experimentally by placing bagged sand at various points around the unit upon the base slab extension while the engine-generator is operating. When optimum dynamic equilibrium is thus determined, sand may be replaced with equivalent mass concrete anchored to the main foundation block and base slab extension.

5.4.13.3 Minimum Requirements. Soil borings should extend no less than 50 ft (15 m) below the bottom of unit foundations, unless rock will be encountered at shallower depth. From these boring, allowable soil bearing pressures engine-generator the need for piles can be determined. Foundation design should be governed by the following:

a) The entire foundation bearing surface should be at the same elevation. Steps or cascades at support level should be avoided.

b) The unit foundation support level should be carried at least 30 in (762 mm) below any trenches or basement floor levels which are adjacent to the unit. This may be reduced to 18 inches (457.2 mm) for 750 kW or smaller units.

c) Minimum static load design reinforcement is 2/10 of one percent of the cross-sectional area vertically and horizontally for all foundations. Minimum reinforcement for dynamic loads shall be at least 3 to 5 times this requirement. Usually, the entire foundation block is considered to be affected by dynamic loads. For larger or not well balanced units, reinforcing should be designed substantially heavier.

d) If bearing level is solid rock, such that thee is a minimum depth of 5 ft (1.5 m) of rock, cover the bearing surface with a 12-inch (304.8 mm) layer of sand for a cushion.

e) Great care should be taken to avoid excessive or unequal settlements. Generally, the soil at elevations upon which unit foundations will bear directly should be capable of supporting a minimum uniform load of 3,000 psf (14,646 kg/m^2) without excessive settlement. The soil, at elevations lower than the bearing level for depths at least equal to unit block lengths, should be of uniform quality without layers or pockets of weak soils. If the quality of soil remains in doubt, even after a comprehensive soil investigation, then consider the use of piles, piers, or caissons.

f) Where piles are necessary, lateral forces may be resisted by battering a portion of the piles. Concrete piles, if used, should be reinforced for at least the upper one-third of their length. Drive so top of pile will project into diesel foundation block or base slab a minimum of 6 in (152.4 mm).

g) For small units, isolated foundations may not be necessary, instead vibration isolators might be employed. Vibration isolators are required when recommended by the engine manufacturer, such as for units which come "skid-mounted", that is mounted on structural steel subbases.

h) Seismic restraints are needed for each unit located in an International Conference of Building Officials, (ICBO), Uniform Building Code (UBC); risk zone 3 or 4. Geographic locations of UBC seismic risk zones are indicated in NAVFAC P-355, Seismic Design for Buildings, refer to DM-7.02.

5.4.14 Cranes for Engine Servicing. Use NFGS 14334, Monorails with Manual Hoist; 14335, Monorails with Air Motor-Powered Hoist; 14336, Cranes, Overhead Electric, Overrunning Type; and 14637, Cranes, Overhead Electric, Underrunning (Under 20,000 Pounds, as appropriate and NAVFC DM-38.01, Weight-Handling Equipment.

5.4.14.1 Sizing. Hoists should be sized for the servicing of engine and generator components. Cranes should not be sized to extend over the entire engine operating area, but only over engine-generator units and their associated laydown space area. Follow the engine-generator unit manufacturer’s recommendations for crane and hoist capacities. Hoist capacities of 1 to 2 tons (900 to 1,800 kg) are usually adequate for smaller-sized generating units and capacities of 3 to 5 tons (2,700 to 4,500 kg) are normally adequate for larger-sized engine-generating units.

5.4.14.2 Electric Operation. Hoists should be electrically powered for 2,000 kW units and larger. Plants with 500 kW to 1,000 kW units should have manually operated cranes and hoists. Plants with smaller units should be provided with monorails and manually operated hoists.

5.4.14.3 Openings. Where hoists are provided to service equipment in basement or lower floor areas, openings should be provided in ground level floor slabs to allow penetration to the equipment in the lower areas. Fit openings with removable gratings. Hoist lengths should be adequate to serve the upper and lower plant levels.

Section 6: SYNCHRONOUS GENERATORS, EXCITATION, AND REGULATION

6.1 General. Diesel engine generating units covered by NFGS specifications (refer to Section 1) are rated for from 10 kW to over 2,500 kW continuous output. Figure 5 indicates the major components that comprise a synchronous generator.

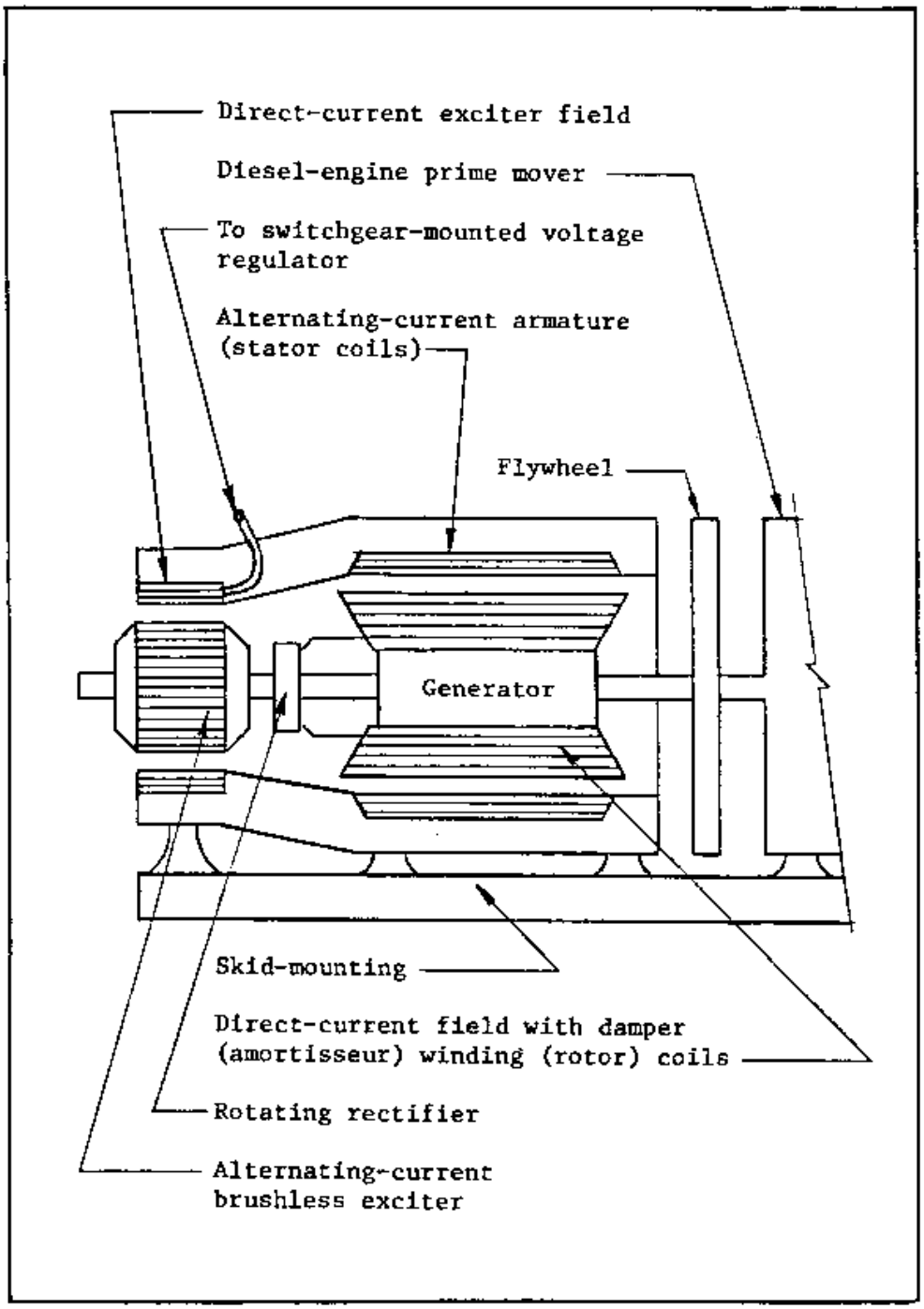

Figure 5
Synchronous Generator Configuration

6.2 Synchronous Generators. Synchronous generators are built to the requirements of the National Electrical Manufactures Association (NEMA) MG 1, Motor and Generators.

6.2.1 Rating. Regardless of the duty rating (i.e. for prime, standby, or emergency use) NFGS specifications require that generators be capable of carrying the gross kW of the diesel engine without exceeding the temperature limits of NEMA MG 1 for continuous duty.

6.2.2 NEMA Temperature Limitation. Limitations are based on a 40 degree C ambient and altitudes not exceeding 3,300 ft (1,000 m) utilizing the specified insulation classes (B and F). Where these values are exceeded, NEMA MG 1 stipulates a decrease in the allowable temperature rise.

6.2.3 NEMA Temperature Classifications. NEMA MG 1 has two temperature rise classifications, continuous and standby. The NEMA MG 1 standby temperature rise shall not be used as a basis for generator ratings used in standby or emergency duty plants.

6.2.4 Generated (Terminal) Voltage. The generator voltage should be the highest standard voltage commensurate with the load served and the electric distribution or utilization system characteristics. NEMA standard voltage ratings shall be used, except where special conditions prevail. The use of stepup or stepdown transformers should be considered only under extending circumstances. Standard generator voltages to be used are as follows:

a) 208Y/120 V

b) 480Y/277 V

c) 4,160 V

d) 13,800 V

6.3 Excitation and Voltage Regulation. The brushless exciter and static voltage regulator combination is considered to provide the best performance available as it provides all the features available from brush-type rotating dc generators or brush-type static exciters while eliminating the maintenance and radio-noise features of the brush type.

6.4 Paralleling and Synchronizing. All generators in a plant shall be capable of operating in parallel with each other and shall be connected so that any or all units can furnish power to the main bus at the same time. Where plants may operate in parallel with commercial power, coordination with the serving utility must be maintained. The plant shall be designed with the capability for paralleling with an infinite bus.

6.4.1 Synchronization. Synchronizing operation can be performed manually or automatically. For both methods, control of incoming voltage and speed is required to match the system before closing the generator circuit breaker. The use of a permissive synchronism-check relay series with the synchronizing switch is suggested. Manual synchronizing is provided on most attended electric generating plants. Automatic start up, synchronization, and shutdown is normally only provided for unattended plants.

6.4.2 Load Division. When generators are operated in parallel, proportional division of the electric load (kW) depends on the power supplied by the engine which is controlled by the speed. However, reactive Kilovoltampere Reactive Power (KVAR) division is shared according to generator excitation. Provisions to adjust excitation for kvar sharing in the generator control is called crosscurrent compensation. Crosscurrent compensation is provided by each current transformer supplying each voltage regulator and acts to limits each generator’s share of the total kvar required. The load is proportionally shared to each generator’s rating.

Section 7: ENGINE CONTROLS AND INSTRUMENTS

7.1 General. Controls and instruments assist in economical operation, supervision, and maintenance of a generating plant. Instruments sense changes in operating conditions and provide data to measure operating economy. An operator can control the changes in operating conditions to some extent by remote equipment. Continuous duty electric generating plants, provided with 24-hour manned operation are usually arranged for manual starting, synchronizing, and stopping and with only automatic protective controls. Standby/emergency generating plants are usually completely automated and controls are unattended. Remote monitoring devices and controls may be limited to system status indication and start/stop controls.

7.2 Speed Governing System. Speed governing systems maintain the same operating speed (frequency) after load increase or decrease by adjusting the fuel delivered to the engine in proportion to the load regulated. As long as the specified performance characteristics are met, the type of the speed governing system provided (i.e. mechanical-hydraulic, electric hydraulic, electric, etc.) should be left to the engine manufacturer's discretion.

7.2.1 Speed Regulation. Speed regulators can be either speed droop or isochronous type. Droop operation permits engine speed to increase as load is removed. Isochronous operation maintains the same speed at any load. Some governors can be operated in either mode.

7.2.2 Governor Operation. Governors consist of hydraulic or servo systems used for fuel control in conjunction with speed sensing elements. Hydraulic governors utilize the centrifugal force produced by rotating fly-weights to actuate the hydraulic servo system. The electric-hydraulic type uses electric signals for actuation of hydraulic servo mechanisms. There are also completely electronic governing systems. Electric signals can also be initiated by changes in frequency (speed) or respond even faster, if initiated by load changes.

7.2.3 Performance Requirements. Industry-recognized performance requirements are given in Table 9. These requirement provide uniform concepts for the appropriate application classification without introducing unwarranted technical refinements and augmented costs. The referenced guide specifications and the industry specification from the Institute of Electrical and Electronics Engineers (IEEE) 126, Speed Governing of Internal Combustion Engine-Generator Units provide systems for independent or parallel operation.

7.2.4 Modifications. Generally the use of the appropriate NFGS specification (refer to Section 1) is all that is necessary. However, when paralleling with the local utility company is a requirement, NFGS approval of the performance characteristics and the type of load sharing control specified is required. Special applications such as another incoming service or more precise frequency and voltage requirements must be evaluated on a case-by-case basis. Values given in Table 9 may not be available for all engine sizes, duties, or manufacturers and may either be excessive or not exacting enough for a specific requirement. It may be more economical to

provide some type of power conditioning for many precise voltage and frequency applications. The upgrading of the performance requirements for generator sizes covered by NFGS-16208 to utility company requirements should be justified by citing the reason, such as telecommunication, data processing, hospital service, or utility company paralleling requirements.

Table 9
Speed Governing Performance Requirements

Performance Requirement	Electric Service Application		
	Industrial Commercial	Public Utility	Precise Power
Specification Number	NFGS-16208	NFGS-16202, Thru 16205	None
Basis for Specification	IEEE 126 Section II	IEEE 126 Section III, As Upgraded	None
Steady-State Governing Speed Band	+/- 0.5%	+/- 0.25%	+/- 0.10%
Recovery Time	4 Seconds	3 Seconds	1.5 Seconds

7.3 Controls. Monitoring and shutdown controls are necessary for unit protection. Also needed are devices to start and stop the unit and to select the operational mode when more than one method of operation is provided.

7.3.1 Engine Fault Monitoring and Shutdown Controls. The minimum requirements for protection of any diesel generator set incorporate the following shutdown devices monitoring the engine:

a) low lube-oil pressure with pre-alarm before shutdown,

b) high water temperature with pre-alarm before shutdown, and

c) overspeed.

Depending on the size of unit and the type of duty, additional monitoring and shutdown controls, such as: monitoring cooling water pressure, lube oil pressure of engine and turbocharger, high lube oil temperature to engine and day tank level may be provided. The designer should specify at least the devices recommended by the manufacturer of the engine.

7.3.2 Engine Start/Stop Cranking Control. Engine star/stop control logic circuitry may be mounted on the unit or in the generator switchgear. The start cycle is initiated by a signal to the cranking motor which starts the engine. The stop sequence can be initiated manually by a stop button, automatically by engine shutdown devices, or by protective relays. In the automatic mode, when the cranking cycle is initiated, it will operate for a preset period usually of one-minute duration with alternate crank and rest periods of about 10 seconds. If the engine does not start during this cycle, the cranking circuitry is shut down. Emergency stops may be initiated by the engine and generator protective devices and, when activated,shut down the engine and disconnect the generator from the load.

7.3.3 Operation Mode Switch. A selector switch is located on the engine gage board to select automatic or manual starting and stopping modes when both types of operation are required.

7.4 Instrumentation. Instrumentation is provided to monitor the engine and generator operation and is mounted on the engine gage board and at the generator control panel. In small plants all instrumentation may be located at the diesel generator. The number of instruments may vary depending on the size and complexity of the plant. The use of solid-state control devices and instrumentation is recommended.

Section 8: GENERATOR CONTROLS AND PROTECTION

8.1 Control Capabilities: Generator devices provide the following control features:

a) The generator circuit breaker provides a switching device to connect or disconnect a generator from the system.

b) The operating control point permits generator switching, voltage and frequency changing, synchronization of generators and commercial sources, and a central point for monitoring of system operation.

c) The generator protective devices provide for safe operation. Refer to the American National Standards Institute (ANSI), C37.2, Electrical Power System Device Function Numbers, for ANSI device numbering system assignments.

8.2 Control Locations. The generator circuit breaker and protective devices are located as appropriate to the installation. The operating control point may be installed either with or separately from its associated circuit breaker.

8.2.1 Definitive Designs 1, 2, 3 and 4. The definitive drawings (refer to Section 1) utilize a separate control switchboard to provide the operating control point. No controls are provided on the generator and feeder switchgear except for operating the bus tie unit. For plants having a capacity of less than 2,000 kW, consider a need for a control console on the basis of providing the following features:

a) Economy, including manpower requirements and operating costs; or,

b) More reliable control, the system requires large and varied load changes which cause frequent stopping and starting of generating units.

8.2.2 Alternate Definitive Design Control. In some cases it may be desirable to also provide control at the switchgear. Such a case might one in which the design configuration requires a significant separation between the Control Room and the Switchgear Room or if simplicity of operation is paramount. Safety considerations for maintenance at the switchgear can be provided as long as the circuit breaker is of the drawout type having a test position, otherwise some other method of preventing simultaneous local and remote control is necessary.

8.2.3 Small Low-Voltage Plants. Low-voltage generators quite often have the generator controls and circuit breaker provided as a part of the skid-mounted engine-generator used.

8.2.3.1 Automatic Transfer Switch (Single Units Only). Generally, an automatic transfer switch is used for single low-voltage diesel generator operation to transfer loads from a normal source to the generator. Circuitry

is included to sense normal source failure, initiate starting of the engine generator, and transfer the load to the generator. When the normal source is restored, the switch will automatically transfer the load back to the normal source and shutdown the engine after a predetermined time.

8.2.3.2 Multiple Ground Points. Emergency or standby power supplies in conjunction with the normal incoming utility service for low-voltage systems can introduce objectional stray currents because of the multiplicity of neutral grounds. A properly designed ground system is necessary to eliminate stray neutral current paths and undesirable ground-fault current sensing path. Grounding arrangements for emergency and standby power systems are discussed in the Institute of Electrical and Electronics Engineers (IEEE) 446, Recommended Practice for Emergency and Standby Power Systems for Industrial and Commercial Applications.

8.3 Operating Control Requirements. Requirements depend upon the size, complexity, and voltage level of the plant. Requirement covered herein apply to medium-voltage, multiple-unit plants and should be adjusted as appropriate for low-voltage plants which are often single-unit plants. Devices should be arranged on control switchboards or switchgear in a simple and distinctive number of circuit breakers to be operated provides a complex electric configuration, consider providing a mimic bus. Organize devices by unit control, synchronizing control, and system monitoring.

8.3.1 Unit Control. Minimum unit control should provide the following devices:

a) Circuit breakers.

1) Control switch.
2) Ammeter and transfer switch.

b) Power sources such as generators or commercial input require synchronizing switches.

c) Generators.

1) Voltage regulator adjusting rheostat.
2) Voltage regulator manual-off-automatic switch.
3) Governor switch.
4) Wattmeter.
5) Varmeter
6) Watthour (Wh) demand meter.
7) Elapsed operating time meter.

8.3.2 Synchronizing Control. The synchronizing control is energized through the synchronizing control switch at the selected source and consists of the following devices:

a) Synchroscope.

b) Bus frequency meter.

c) Bus voltmeter.

d) Incoming voltmeter.

8.3.3 Permissive Control. Local policy synchronization may dictate the use of a permissive type synchronism check relay (ANSI Device 25) which is provided in series with the synchronizing switch to prevent closure when the two sources are too far out of synchronization. This devices checks voltage on both sides of a circuit breaker, this providing protection against operating errors.

8.3.4 System Monitoring. System monitoring is provided to aid the operator in avoiding system abnormalities. The amount of reporting, alarming, and control can vary from alarms reporting there is a problem at a certain location, or reporting only of electrical quantities and control as previously discussed, to complex microprocessor-based Supervisory, Control, and Data Acquisition Systems (SCADA).

8.3.4.1 Type of System. The operating duties of the plant should be considered in system selection. Large prime duty plants in remote locations or cogeneration plants may require SCADA. Where plants are continuously manned, requiring only the minimum monitoring is usually adequate, refer to Section 1, NFGS specifications.

8.3.4.2 SCADA. This system provides a master station which utilizes input from equipment-mounted, field interface panels normally in conjunction with a record-keeping printer. The selected reporting, alarm, and control functions should consider those required for Energy Management Control systems (EMCS) either by utilizing an existing EMCS or providing a new system.

8.4 Generator Protection. Surge protection, neutral grounding, and protective relays are used to protect the system from electric power system disturbances whose abnormality could damage equipment or harm personnel.

8.4.1 Surge Protection. Some form of surge protection is usually necessary within a generator plant. Surge arresters in parallel with surge protective capacitors may need to be installed at the terminals of each generator. Surge protective capacitors reduce steep wave fronts, which if imposed on rotating machinery could result in stresses exceeding insulation impulse strength of a machine. Small units supplying emergency loads within a building which are not subject to lightning or switching surges usually do not require surge protection.

8.4.2 Generator Neutral Grounding. Generator neutrals are grounded to provide service reliability and reduce fault stresses in equipment. For low-voltage systems, the neutral supplies phase-to-neutral loads as well. The method of connecting the neutral to the station ground system is selected as required to limit the available ground fault current.

8.4.2.1 Solid Grounding. For generators having a ground return path which limits the ground current to safe values and where harmonic currents are small, a solid ground connection is acceptable. Low-voltage generators are usually provided with additional phase-to-neutral bracing so that the less

expensive solid grounding can be provided, but this feature should be specified.

8.4.2.2 Impedance Grounding. For medium-voltage systems, impedance grounding is normally provided to limit ground fault current to a value equal to or below the three-phase fault current. Reactance grounding is used where ground fault currents of 25 to 100 percent of three-phase currents allows for satisfactory ground fault relaying. Resistance grounding is used when even lower values of ground fault current are necessary for system protection or coordination.

8.4.3 Protective Relaying. Protective relays constantly monitor the power system to assure maximum continuity of the generation and distribution system and to minimize the damage to life and property.

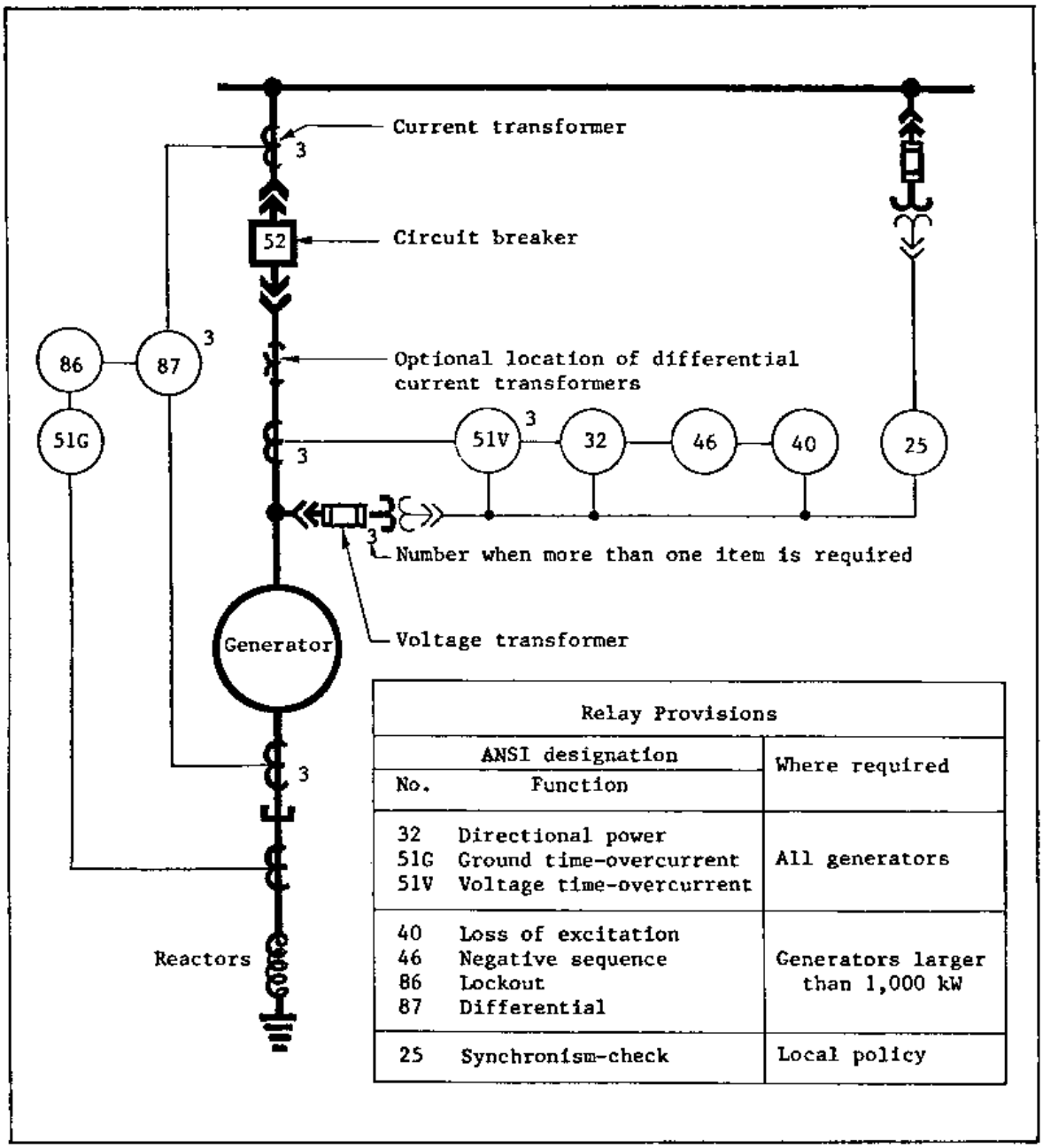

Relay Provisions		
ANSI designation		Where required
No.	Function	
32	Directional power	All generators
51G	Ground time-overcurrent	
51V	Voltage time-overcurrent	
40	Loss of excitation	Generators larger than 1,000 kW
46	Negative sequence	
86	Lockout	
87	Differential	
25	Synchronism-check	Local policy

Figure 6
Minimum Relay Protection

8.4.3.1 Generator Protection. The normal protection required for medium-voltage generators is shown on Figure 6. Control power is supplied from the station battery system.

a) Differential Relaying (ANSI Device 87): Since differential relaying utilizes a current difference between two points to indicate a fault, differential current transformers should not be used to supply other devices. The current transformer location points are shown on Figure 6. The generator current transformers can be located on either side of the generator circuit breaker in accordance with the manufacturer's standard practice. The lockout feature (ANSI Device 86) is standard for differential relaying.

b) Ground Relaying (ANSI Device 51G): The lockout feature is desirable for ground relaying, but it is not necessary in plants having adequately trained personnel.

8.4.3.2 Incoming Line and Feeder Protection. The minimum relaying requirements shall consist of overcurrent protection as is shown on definitive drawings (refer to Section 1). Although time-overcurrent relaying (ANSI Device 51) may be sufficient for protection, it normally also provides the instantaneous element, (ANSI Device 50), an accessory feature in the same enclosure with the time-overcurrent relay. This unit can be blocked, if not needed, but is available for changing system conditions.

8.4.3.3 Load Shedding Capability. A load shedding system capability can be provided based on sensing underfrequency or a rate of frequency decline on the system caused by sudden load changes. System balance can be established by temporarily dropping selected feeder loads. Underfrequency schemes are usually arranged in steps to continue dropping load until the system is stabilized. The use of undervoltage sensing is inadvisable since the generator voltage regulators will tend to compensate for voltage decay.

8.4.3.4 Analysis. To determine actual protective relaying requirements, an analysis should be performed concerning requirements for new systems and coordination with existing systems. Fault calculations may indicate the need for protection in addition to the minimum requirements covered previously. Additional protection may be indicated because of either the size of the new distribution system or to match the existing distribution system. See NAVFAC MO-204, Electric Power System Analysis, for guidance on assembling the information necessary for a coordination study.

8.4.3.5 Control Power. Direct-current closing and tripping for medium-voltage circuit breakers should usually be provided by a 125 V station battery system. For low-voltage generating plants, 24 V or 48 V systems should normally be supplied, except where very small systems utilize automatic transfer switches for commercial to generating system transfer. Lead calcium cells should be utilized except when maintenance requirements justify the use of the more costly nickel-cadmium cells. Batteries are highly reliable devices when properly maintained. Provision of a second battery system will usually not provide any more reliability, since such its system maintenance will be on the same level as the system it backs up. However, for very large plants consider supplying one-half of the plant loads from separate battery systems which can interlocked so either or both systems can supply the load but systems cannot be paralleled.

Section 9: BUILDING CONSTRUCTION FOR DIESEL-ELECTRIC GENERATING PLANTS

9.1 Building Construction. Building types which house diesel-electric generating plants are either single-level or two-level. Two-level generating plants may have a basement and first floor or both levels may be above grade. Plant construction type planning factors are summarized in Table 10.

Table 10
Plant Construction Type Planning Factors

Type of Plant	Items To Be Considered	Comments
	Single-Level Plants	
Slab-on Grade Single Story	1. Size and number of units. 2. Adequate site area. 3. Engine foundation requirements. 4. Ventilation requirements. 5. Adequate bay spacing for auxiliaries.	Ventilation and source of combustion air must be coordinated. Small units may have skid-mounted radiators which affects ventilation provided. Trenches are usually provided for piping and electric cable runs.
	Two-Level Plants	
I--Basement Type	1. Adequate basement ventilation and lighting. 2. Sufficient stairways for access and escape from the basement. 3. Provisions to prevent flooding of the basement.	Ventilation of the basement will require some ductwork to extract air and fumes from the lowest level of the basement. Adequate grating area at engines must be provided to remove and service equipment located in the basement.
II--First Floor at Grade Type	1. Sufficient doors for access to equipment and to allow removal and servicing of lower level auxiliaries. 2. Sufficient stairways to allow access to operating level from lower floor. 3. Site building so all drainage is away from building.	Ventilation of the lower level is simplified and usually wall fans are adequate. Foundation blocks are usually built first. Excavation is a minimum. Engines and generators can be set on foundations and building constructed afterwards.

9.2 Single-Level Diesel-Electric Generating Plant Layout. The single-story slab-on-grade layout is the usual design for smaller electric-generating plants (1,000 kW capacity and smaller). This layout may also be used for larger capacity generating plants where special conditions dictate the use of a single-level installation. All auxiliaries and support facilities are located on the same level. Single level construction requires more floor area. Trenches must be constructed in the slab for major piping runs. Such trenches become awkward for larger generating capacity plants with several units installed in parallel. Engine-generator sets are usually set on separate foundation blocks and are isolated from the floor slab. Some smaller skid mounted units may be set on isolators and bolted to floor slabs.

9.3 Two-Level Diesel-Electric Generating Plant Layout. Two-level installations consist of an upper level engine operating floor and a lower level for major auxiliaries. This type of layout is most applicable to larger units installed in parallel. Such plants require less site are than do single level plants and the operating floor is kept relatively clear of obstructions.

9.3.1 Two-Level Plant with a Basement. The operating floor is at ground level and major auxiliaries are installed in a below-grade basement area. Gratings are usually provided along sides and at the front of the engines to aid in ventilation and to provide access for maintenance of the units and the lower level auxiliaries.

9.3.2 Two-Level Plant with a First Floor at Grade. The layout is basically the same as the two-level plant with a basement. The only major exception is that offices and support facilities are normally located in the second (raised) level. The two-story arrangement has some advantages over other layouts in lighting and in ventilating features. A significant advantages in avoiding the dangers of flooding which prevail in basement type installations located in wet climates. Where weather conditions permit, portions of the first floor may remain open. However, consideration must be given to plant locations in proximity to noise-sensitive areas and facilities.

Section 10: NONSTANDARD DIESEL-ELECTRIC GENERATING PLANTS

10.1 Conditions for Nonstandard Plant Selection. Nonstandard plant types may be considered for unusual conditions where definitive designs of diesel-electric generating plants are not applicable.

10.2 Gasoline Engine Electric Generators. Where the weight and cost per kilowatt is a predominant factor in selection of engine type, and where fuel storage space is at a premium, gasoline-engine electric generators may be considered for standby/emergency duty plants serving emergency loads in capacities from 10 kW to 300 kW. Disadvantages of fire an explosion hazards in closed spaces and requirements for special ventilation features should be evaluated. Also, consider the poor storage qualities of gasoline fuels. Refer to NAVFAC DM-22, Petroleum Fuel Facilities, for characteristics, storing, and handling of gasoline. A life-cycle economic analysis is required for the selection of a gasoline engine generator plant.

10.3 Gaseous and Dual-Fuel Engines. Several considerations relating to the fuel must be taken into account when designing nonstandard plants.

10.3.1 Gas Heating Value. Gaseous fuels include natural gas, and liquid petroleum gases, such as propane. Digester gas may also be considered. Prepare procurement specifications for gas and for dual fueled engines, when gas is one of the fuels, using the lower heating value of the gas fuel. Engine suppliers can provide guaranteed performance levels based on the chemical and physical composition of the gas proposed to be used only if such data is specified.

10.3.2 Wet Gas Treatment. Consult the engine manufacturer regarding proper treatment of gasses containing liquid hydrocarbons (wet gas) when dry gas is not available.

10.3.3 Gas Supply Shut-Off. The hazardous nature of gaseous fuels makes it necessary to provide devices that shut off the gas supply immediately on engine shutdown for any reason, including low fuel pressure or loss of ignition.

10.3.4 Gas Pressure. The designer should determine the gas supply pressure. If it does not exceed the minimum requirements of the engine, a booster compressor may be required between the supply and the gas engine. Some gas burning and dual-fuel engines require uniform gas pressure. In these cases, an accurate pressure regulating valve should be placed near the engine. It must be vented outdoors.

Section 11: WATER CONDITIONING

11.1 Purpose of Treatment. Cooling water must be treated to remove chemicalcomponents of the water supply that produce deleterious effects in the diesel-engine cooling systems and allied equipment.

11.2 Choice of Treatment. The choice of treatment, type, and facilities depends on the cooling system, characteristics of the water supply, chemical components of the water, and the cost of treatment. This information can be obtained only by a detailed investigation of the water supply. Water treatment consultants should be retained to analyze water samples, recommend types of treatment, and the chemicals required for internal treatment.

11.3 Chemicals and Conversion Factors. For chemicals and conversion factors used in water treatment systems, refer to the National Water Well Association (NWWA), Water Conditioning Technical Manual.

11.4 Diesel-Electric Generating Plant Cooling Systems.

11.4.1 Radiator Cooling Circuits. Jacket water and lubricant cooling systems for diesel engines, in general, should be closed-circuit types requiring very little makeup water. In radiator type cooling, the same fluid is usually circulated through the engine jackets, turbocharger aftercooler, lubricant cooler heat exchanger and fan cooled radiator. In smaller sized units, the entire engine, generator, cooling radiator, radiator fan, turbocharger, aftercooler, and connecting piping systems are all self-contained or packaged on a structural skid-type subbase. When units are of large capacity, the cooling air quantities become large, and the radiator units are moved outside the power plant building. In cases of larger capacity units, the lubricant coolers can be incorporated with the radiator and become air cooled by the radiator fans. In a marine environment admiralty metal should be used for radiator construction.

11.4.2 Cooling Systems for Larger Diesel Engines. In general, the engine cooling circuits remain the closed-circuit type with cooling supplied by an external radiator, cooling tower, or other source of cooling water. The primary cooling fluid can be cooling tower water, cooling pond, river water lake water, sea, or well water. Separating the primary and secondary fluids by means of heat exchangers is essential to prevent high maintenance costs and reduced reliability of the engines and heat exchangers. High concentrations of dissolved salts, solids, and turbidity in natural water sources can cause these problems. Monitoring and treating cooling tower or cooling pond makeup water is required to prevent fouling of heat exchangers cooling towers and basins. Where diesel-electric generating plants are located in windy and dusty locations, the use of cooling water recirculation filters will improve the reliability of the installation. In general, were ambient temperature conditions are suitable, dry-type radiator (air) cooling provides the most trouble and maintenance-free type of system. The need for only small amounts of water to make up that lost by expansion tank evaporation reduces the need for extensive water treatment systems.

11.4.3 Ocean Water Cooling. The use of ocean water as a source of cooling adds the additional complication of an active corrosive fluid in the system. The system must also be of the closed type with heat exchangers provided to separate the primary and secondary cooling circuit fluids. Corrosion resisting materials are required for seawater pumps, piping, and heat exchangers, and special stainless steel alloys, titanium, or other exotic materials are usually employed. Extensive experience has been developed recently in the installation and operation of desalination plants of the evaporator and Reverse Osmosis (RO) types. Remaining maintenance problems center around the primary seawater pumps, filters, and piping elements. Small reverse osmosis plants could be used to produce suitable makeup water for radiator type cooling where no other source is available. Reverse osmosis systems can also be used on brackish water or water with other impurities to produce a satisfactory makeup water supply.

11.4.4 Exhaust Heat Reclamation. Where heat exchange silencers are provided for cogeneration of hot water or steam, treatment of forced hot water or boiler feed water shall conform with requirements of NAVFAC DM-3.06, Central Heating Plants. See Table 11 for maximum boiler water concentrations set by boiler manufacturers to limit their responsibilities for steam purity. Boiler water concentrations should be kept below (preferably well below) these limits by the following means:

a) intermittent or continuous blowdown,

b) raw makeup water treatment,

c) feedwater treatment, and

d) internal chemical treatment.

See Table 12 for the effectiveness of some typical water treatment systems.

Table 11
Maximum Boiler Water Concentrations

Boiler pressure (lb/in└2┘)[1]	Total solids (mg/l)[2]	Total Alka-linity (mg/l)	Suspended solids (mg/l)	Silica (mg/l)
0-300[3]	3,500	700	300	125

[1]Multiply lb/in└2┘ by 703 to obtain kilograms per square meter.
[2]Milligrams per liter (mg/l) = parts per million (p/m).
[3]Follow boiler manufacturers recommended water quality criteria for pressures above this level.

11.4.5 Internal Water Treatment. All heat generating systems and cooling systems, where water is heated or evaporated leaving cumulative solids, should be treated chemically while the system is in operation. Table 11 gives the limiting boiler water concentrations for steam boilers and generators.

Table 12
Typical Performance of Some Water Treatment

Treatment	Average Analysis of Effluent				
	Hardness (as CaCO) (mg/l)[1]	Alkalinity (as CaCO) (mg/l)	CO_2 in steam (mg/l)	Dissolved solids (mg/l)	Silica (mg/l)
Sodium zeolite	0 to 2	Unchanged	Low to high	Unchanged	Unchanged
Sodium + hydrogen zeolite	0 to 2	10 to 30	Low	Reduced	Unchanged
Sodium zeolite + chloride anion exchanger	0 to 2	15 to 35	Low	Unchanged	Unchanged
Demineralizer	0 to 2	0 to 2	0 to 5	0 to 5	Below 0.15
Evaporator and reverse osmosis	0 to 2	0 to 2	0 to 5	0 to 5	Below 0.15

[1] Milligrams per liter (mg/l) = parts per million (p/m).

11.4.5.1 Blowdown. Intermittent and continuous blowdown help to ensure that water quality limits are not exceeded. Treatment of water makeup assists in limiting the amount of dissolved solids entering the system.

11.4.5.2 Chemicals Used. The actual internal treatment with chemicals is part of the operation. These chemicals can only be determined by water analysis and the amount of makeup water required by the cooling system used.

11.4.6 Raw Water Treatment. Where turbidity is encountered in raw water, the use of pressure filters with sand or anthracite media is recommended upstream of all other treatment systems. Packaged pressure filter systems for commercial and industrial use are available, ready for installation and operation. Such systems are complete with all filter tanks, filter media, piping, alum feeder, and valves. Where raw water contains excessive calcium and magnesium ions, the use of pressure type sodium in exchange systems (standard water softeners) will usually produce an acceptable makeup water for cooling tower and closed circuit cooling system makeup needs. The treating of complex water compositions requires detailed chemical and physical analysis and treatment recommendations by competent water consultants.

11.4.7 Water Treatment Selection Factors. See Table 13 for a general guide to possible means of avoiding circulating water problems. For collateral reading on the problem, refer to "Water Treatment" in the American Society of Heating, Refrigerating, and Air Conditioning Engineers (ASHRAE), Systems Handbook, Chapter 33.

Table 13
Circulating Water Treatment Selection Factors

Water Problem	Once-Through Treatment System	Closed Recirculating Treatment System	Open Recircu Treatment S
Scale	Polyphosphates. Hydrogen-ion concentration (pH) control. Manual cleaning.	Chemical cleaning of heating equipment. Softening, pH control.	Continuous blowdown. Polyphosphat pH control. Softening. Manual clean
Corrosion	Corrosion resistant materials. Coatings. Corrosion inhibitors. pH control.	Corrosion resistant materials. Deaeration. Corrosion inhibitors. pH control.	Corrosion re materials. Coatings. Corrosion inhibitors. pH control.
Erosion	Erosion resistant materials. Velocity limitations. Removal of abrasives.	Erosion resistant materials. Velocity limitations. Filtration.	Erosion resi materials. Velocity limitations Filtration.
Slime and algae	Chlorinator. Chemical algaecides and slimicides. Manual cleaning.	Chlorinator. Chemical Algaecides. Manual cleaning.	Continuous blowdown. Chemical algaecides. Velocity Manual clean
Delignification of wood	None	None	pH control.
Fungus rot	None	None	Pretreatment wood.

11.4.8 Types of Circulating Coolant Systems. The purpose of the circulating coolant systems is to transfer heat from the heat generating source to a lower temperature heat sink. Four examples of cooling systems are illustrated as typical approaches to the plant design, see Figures 7, 8, 9, and 10. Efforts should be made to isolate the engine cooling circuits from contaminated or dirty coolants as one means of ensuring proper engine performance, maximum life, and minimum maintenance.

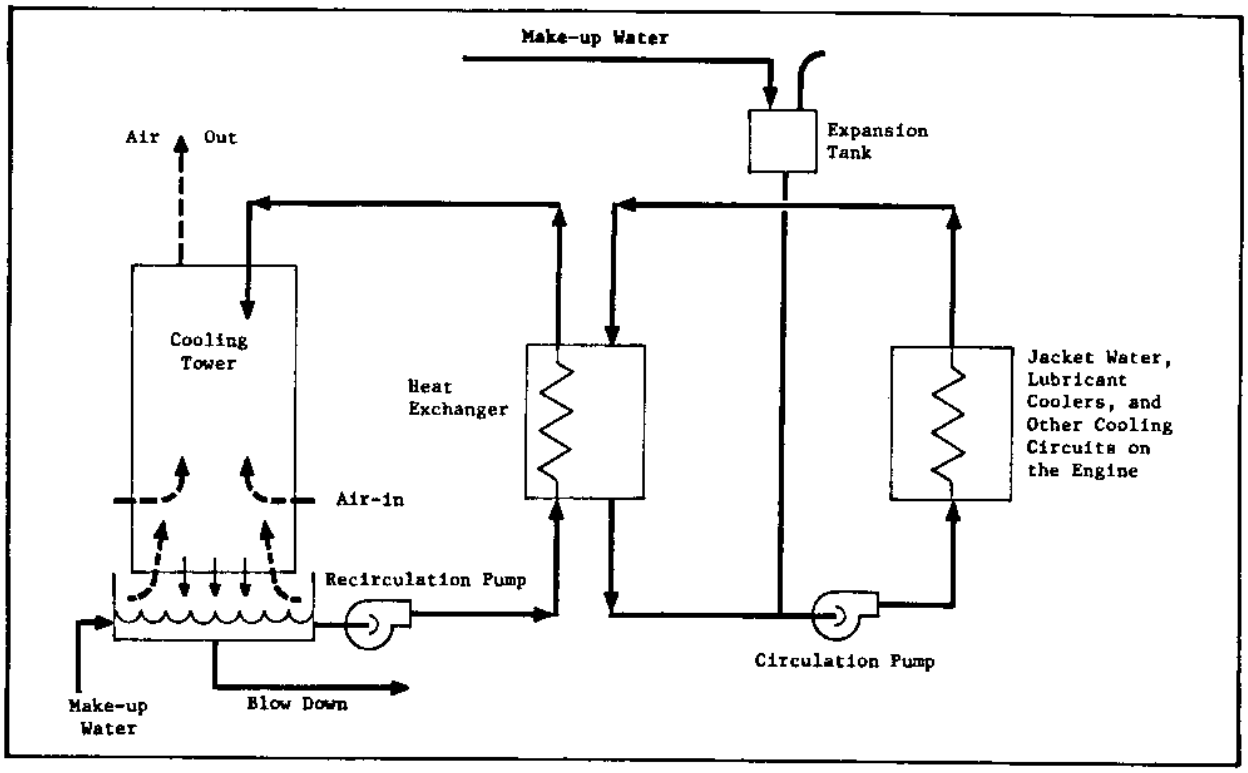

Figure 7
Cooling Water Flow Diagram: Once-Through System

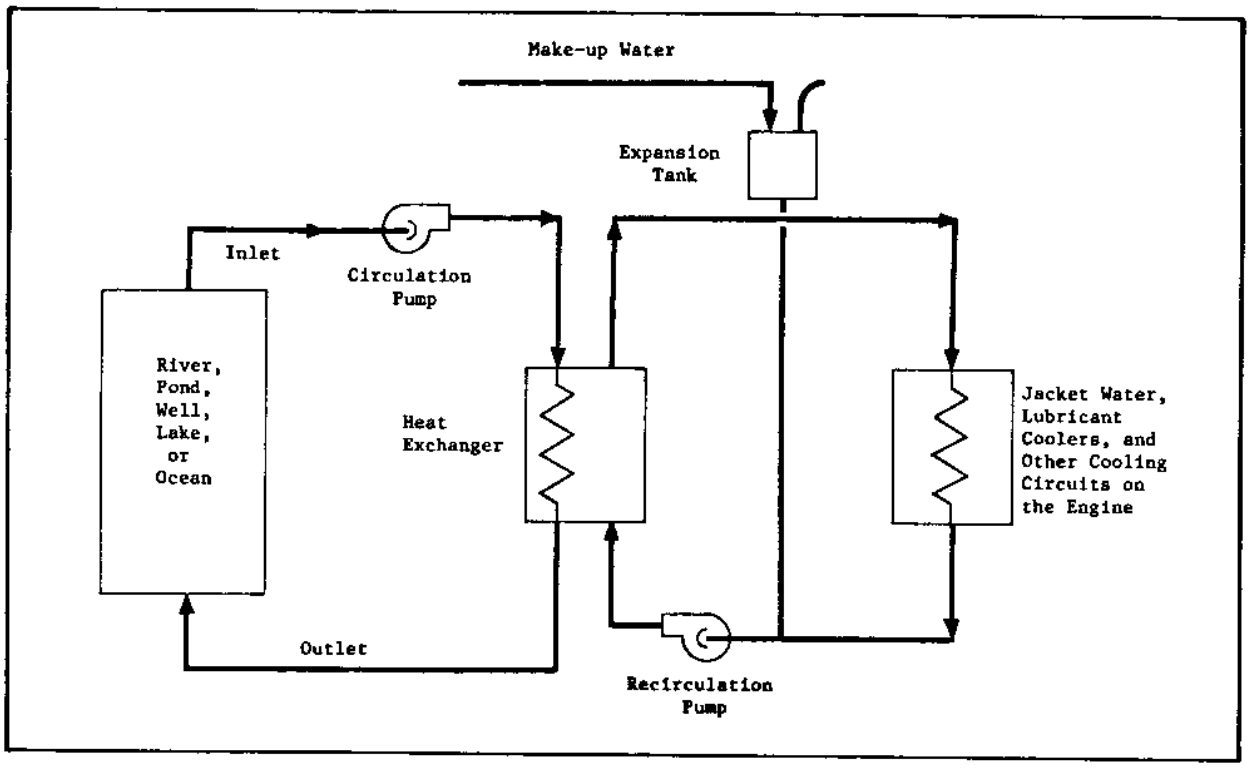

Figure 8
Cooling Water Flow Diagram: Open Cooling Tower System

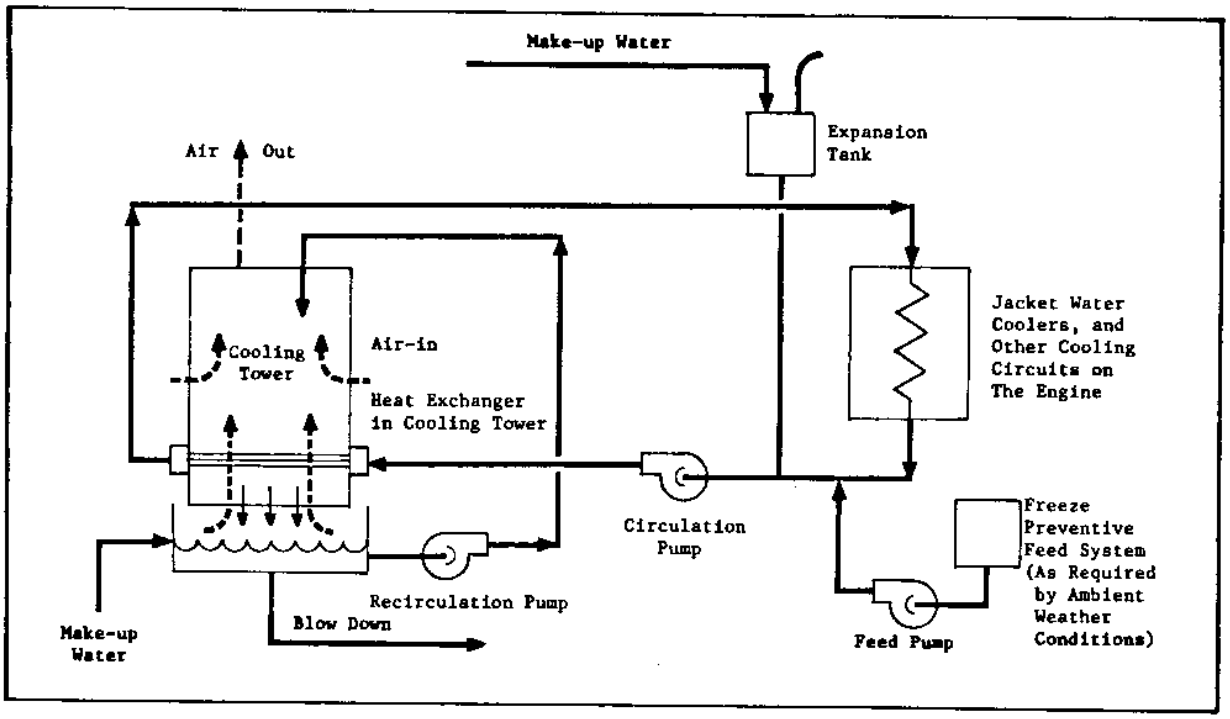

Figure 9
Cooling Water Flow Diagram: Closed Cooling Tower System

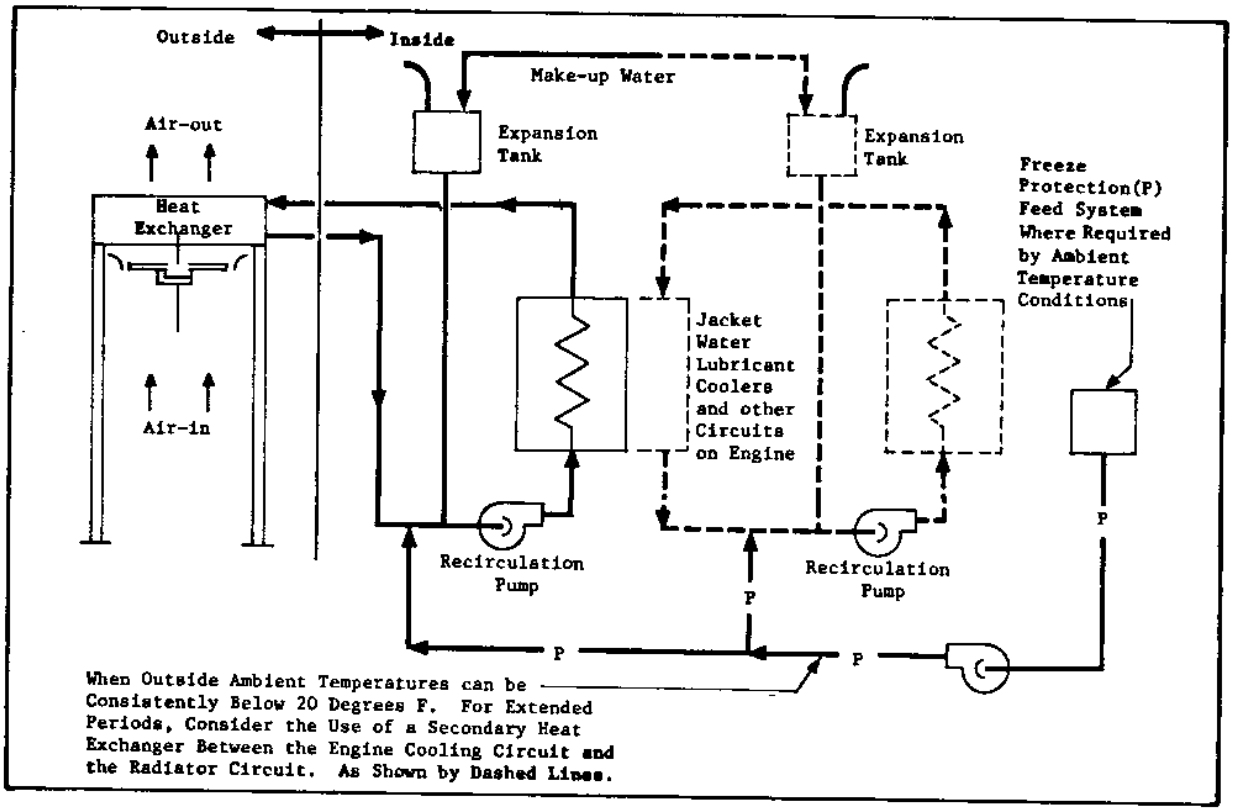

Figure 10
Cooling Water Flow Diagram: Air-Cooled Radiator System

Section 12: PIPING

12.1 Piping Material.

12.1.1 Specifications. Use the appropriate NFGS electric generating plant specification to specify all piping materials for diesel electric-generating plants with temperature service below 750 deg. F (399 deg. C).

12.1.2 Metal Piping. Metal piping material should conform to the American Society for Testing and Materials (ASTM) A53, Pipe Steel, Black and Hot-Dipped, Zinc-Coated Welded and Seamless.

12.1.3 Plastic Piping. Pending issuance of technical requirements and specifications by NAVFACENGCOM, addressing exterior distribution of salt water piping systems, no plastic pipe shall be installed for this usage at naval shore activities without prior approval of specified installations by NAVFACENGCOM Headquarters. See NAVFAC DM-3.08, Exterior Distribution of a Utility Steam, HTW, CHW, Fuel, Gas, and Compressed Air for design guidance of other exterior piping systems.

12.2 Pipe Thickness. Schedule numbers listed in the American National Standards Institute (ANSI) B36.10, Welded and Seamless Wrought Steel Pipe, correspond to certain wall thicknesses for nominal pipe diameters and are in an approximate ratio of 1,000 times the internal pressure (pounds per square inch gage) divided by the allowable stress (pounds per square inch). Schedule numbers are superseding outmoded terms which indicated thickness, such as "Standard," "extra strong," and "double extra-strong." For more accurate formulas for pipe thicknesses, refer to ANSI B31.1, Power Piping.

12.3 Piping Flexibility.

12.3.1 General. Provide adequate flexibility in all piping systems containing hot fluids under pressure. Refer to NAVFAC DM-3.08, Table 11-7 for expansion of metals with temperatures. Provision must also be made for restraint and guiding of piping in seismic zone areas, as outlined in NAVFAC P-355, Seismic Design for Buildings.

12.3.1.1 Thermal Expansion. Many methods of calculating stress reactions and movements in piping due to thermal expansions have been developed. Several piping equipment manufacturers supply calculation forms or graphs for estimating such values.

12.3.1.2 Pipe Steam Flexibility. An inflexible piping system can overstress the piping and destroy connected equipment and anchors. The flexibility of a pipe arrangement can be determined on inspection by an experienced designer. Where reasonable doubt of flexibility exists, make formal piping stress calculations to verify that the stresses permitted by Section 6 of ANSI B31.1 have not been exceeded and that piping reactions and moments at the equipment connections of anchors are not excessive. Flexibility of a piping system may be obtained by methods described below. Refer to seismic design requirements in Section 15.

12.3.1.3 Obtaining System Flexibility. The following are available methods for obtaining pipe system flexibility.

a) Offsets. Changing the pipe direction is the most economical method of flexibility control when feasible, especially when used with ball joints or grooved couplings.

b) Expansion Loops. Use expansion loops to limit pipe stresses and to gain the necessary flexibility where changes in pipe direction cannot be used or are insufficiently flexible. Pipe loops and offsets are preferred over bellows or slip type expansion joints as they have high reliability, are maintenance free, and require less anchorage and guiding.

c) Expansion Joints. Where space conditions are very restricted, as in a trench, expansion joints of either the bellows or slip type are applicable for axial movements, and the bellows type for some lateral movement, when the bellows is designed for it. Both types may be used for service pressures up to 250 lb/in^2 (17.5 kg/cm^2) for saturated steam. Higher temperatures have a deteriorating effect on the packings of the slip type. Also refer to NFGS-15711, Hot-Water Heating System, and NAVFAC DM 3.08. Maintaining pipe alignment is essential to the proper operation of all types of expansion joints.

d) Pipe Sections with Ball Joints or Grooved Couplings. Where pressure conditions permit, pipe sections with ball joints or grooved connections may be used for three dimensional movements. Ball joins and grooved couplings are self-restraining; their proper use can minimize the need for anchors and pipe alignment guides. Proper selection of ball coatings and seal materials will ensure lengthy low maintenance life. Grooved coupling gaskets shall be of materials suitable for the fluids and the temperatures involved.

12.4 Anchors and Supports.

12.4.1 Location. Locate anchors to control pipe line expansion and contraction characteristics and to limit movements of branch takeoffs from a main line. Careful consideration should be given to placement of anchors in piping systems. Often a more flexible system and lower stresses will result by the use of a minimum number of anchors, except in long straight lines. Anchors must be provided to limit lateral motion of piping systems due to seismic forces when installed inactive seismic zones.

12.4.1.1 Stops and Guides. Use stops or guides to direct movements away from sensitive equipment such as pumps or turbines or to keep axial alignments, particularly at expansion joints.

12.4.1.2 Rigid Hangers. Use roller or rod rigid hangers where vertical movement is limited but not where they interfere with pipe flexibility.

12.4.2 Anchor and Support Types. The following describes anchor and support types:

a) For moderate vertical movements, use spring hangers with provisions for adjustment.

b) For large vertical movements, use compensating spring or counterpoint hangers.

c) For resilient or vibrating conditions, use nonresonant, constant-support, sway hangers.

d) Anchor reactions are obtained from flexibility calculations.

12.5 Welding. For welding of pipe joints, refer to ANSI B31, the American Society of Mechanical Engineers (ASME), Boiler and Pressure Vessel Code SEC 9, Qualification Standards for Welding and Brazing Procedures and NFGS-15711.

12.6 Flows and Recommended Velocities. Refer to NAVFAC DM-3.08 for flows and recommended velocities.

12.7 Valves and Specialties. Refer to NAVFAC DM-3.06, Central Heating Plant, for valves and specialties.

Section 13: INSULATION

13.1 Insulation Materials. See Table 14 for characteristics and temperature use limits of insulation materials applicable to diesel-electric generating plants.

Table 14
Characteristics of Thermal Insulation Materials

Form	Material (Composition)	Accepted Maximum Temperature for Use °F[1]	Density lb/ft³	Typical Conductivity at Mean Temperature[2] 40	70	100	200	300	500	700	900
Blankets.	Mineral wool (rock, slag or glass):										
	Metal reinforced	1,200	6-15			0.29	0.35	0.42	0.56		
	Felt-flexible type	450	0.5-3	0.23	0.25	0.26	0.34	0.45			
	Felt-semi-rigid type	450	2-8	0.24	0.25	0.27	0.35	0.44			
	Calcium silicate	1,200	11			0.33	0.38	0.43	0.53	0.64	0.75
	Cellular glass	800	9	0.37	0.39	0.41	0.48	0.55			
Blocks & boards.	Corkboard (without added binder).	200	6.5-8	0.26	0.27	0.28					
	Diatomaceous silica	1,500	22						0.60	0.64	0.68
		1,900	25						0.70	0.75	0.80
Pipe Insulation.	Mineral wool (rock, slag or glass):										
	Low temp (asphalt or resin bonded)	200	6-18	0.28	0.29	0.30					
	High temp (resin bonded)	600	6-10			0.28	0.35	0.43			
	(With inorganic binder)	1,600	16-24			0.34	0.39	0.44	0.54	0.64	
	Plastics (foamed)	175	1.6	0.26	0.28	0.30					
	Rubber (foamed)	150	5	0.23	0.24	0.25					
	Calcium silicate	1,200	11			0.33	0.38	0.43	0.53	0.64	0.75
	Cellular glass	800	9	0.37	0.39	0.41	0.48	0.55			
	Cork (without added binder).	200	7-10	0.27	0.28	0.29	0.30				
	Diatomaceous silica	1,500	22						0.64	0.66	0.71
		1,900	25						0.70	0.75	0.80
Insulating cement.	Mineral wool (rock, slag or glass):										
	With colloidal clay binder.	1,800	24-30			0.49		0.61	0.73	0.83	
	Low temperature (asphalt or resin bonded).	200	15	0.28	0.30	0.33	0.39				
	Low temperature (fine fiber resin bonded).	450	3	0.22	0.23	0.24	0.27	0.31			
	High temperature blanket-type (metal reinforced).	1,200	6-15			0.29	0.36	0.42	0.56		
	Plastics (foamed)	175	1.6	0.26	0.28	0.31					
	Rubber (foamed).	150	5	0.23	0.24	0.25					

[1]These temperatures are generally accepted as maximum. When operating temperature approaches these limits, the manufacturer's recommendations should be followed.

[2]Thermal conductivity (k) of industrial and pipe insulations for mean temperatures in degrees F indicated is expressed in (Btu) (ft)/(h) (ft^2) (°F).

[3]Conversion factors are as follows:

$°C = (°F - 32)/1.8$

$kg/m^3 = (lbs/ft^2)(1.6)$

$(W)(cm)/(cm^2)(°C) = (.0173)(Btu)(ft)/(h)(ft^2)(°F)$

13.2 Insulation Applications. Use criteria in NFGS-15250, Insulation of Mechanical Systems to specify materials for insulating and covering piping and equipment. Special insulation is included for engine exhaust piping. Water and lube oil lines to generators are not specifically covered. Such lines attached to the engine or with a flow path through the engine are considered to be in the temperature range of 140deg.F to 200deg.F (60deg. to 90deg. C) and therefore require insulation. Only asbestos-free materials shall be used for insulation, as is required in OPNAVINST 5100.23, 17005(a), Navy Occupational Safety and Health Program.

13.3 Economic Thickness. The computer program of the Thermal Insulation Manufacturers Association (TIMA), How to Determine the Economic Thickness of Insulation, should be used to select the most cost effective thickness.

13.4 Fire Limitations. Building and equipment insulation material should have a flame spread rating of 25 or less, and smoke developed rating of 50 or less when tested in accordance with the American Society of Mechanical Engineers (ASTM) E-84, Surface Burning Characteristics of Building Materials.

Section 14: CORROSION PROTECTION

14.1 Justification for Corrosion Protection. Corrosion can occur in almost every metallic substance to some degree and in many cases to a severe degree. A corrosion protection program directed against severe corrosive conditions must be justified on the basis of economy, necessity, and hazards.

14.1.1 Economy. The owning, operating, and maintenance costs of a corrosion protection program should be less than the sum of the following:

a) costs of direct loss or damage due to corrosion of metal structures,

b) costs of maintenance attributed to corrosion, including indirect losses, such as leakage loss of tank contents,

c) cost increases for "overdesign" in excess of actual requirements to allow for corrosion losses, and

d) costs of shutdown, power failures, labor losses, and other items.

14.1.2 Operational Necessity. Military facilities must be maintained in a state of readiness at all times, with the importance of the mission determining the degree of necessity for corrosion protection.

14.1.3 Hazards in Handling Materials. Preventive measures are necessary where deterioration of structures serving fluid or gas piping, storage, or using equipment, may result in dangerous losses by fire and explosion.

14.2 Causes of Corrosion. Corrosion is the disintegration of a metal by one or more of the following causes:

14.2.1 Electro-Chemical (Galvanic).

14.2.1.1 Dissimilar Metals. Two contacting dissimilar metals or portions of a metallic substance in contact with an electrolyte, such as water, soil, or chemical solution, will cause an electric current to flow from the relatively positive-charged metal (anode) to the relatively negative-charged metal (cathode); as a result, metal ions go into solution.

14.2.1.2 Corrosion Protection. Refer to NAVFAC DM-4.06, Lightning and Cathodic Protection, and NAVFAC DM-5.07, Civil Engineering, Water Supply Systems, for additional details.

14.2.2 Differential Environments. Metals immersed in substances having different concentrations of ions (such as different soil compositions) will result in corrosion.

14.2.3 Stray Currents. Small electric currents may stray from sources of direct current and cause corrosion of metals in their paths.

14.2.4 Chemical Attack. The basic action of chemical attack is electro-chemical; the attack on metals is usually uniform rather than localized.

14.2.5 Microbiological (Tuberculation). This type of corrosion produces deterioration of metals as a result of metabolic activities of microorganisms.

14.2.6 Atmospheric. Corrosion of metals exposed to high humidities (over 70 percent) and high concentrations of airborne sulfur and carbon oxides. Salt-laden atmospheres are also very common in coastal areas. As naval installations are usually close to the ocean or other waterways, careful attention must be paid to the selection of materials used for construction, surface treatment, concrete reinforcement, electrical conduits, support structures, piping, and similar components.

14.2.7 Stress and Fatigue. Stress and fatigue of metals usually do not initiate corrosion, but in most cases they may accelerate it.

14.3 Corrosion Control Methods. Use one of the following methods to control corrosion.

14.3.1 Nonmetallic Materials.

14.3.1.1 Inorganic. The substitution of inorganic materials for metals in corrosive environments is often desirable; for example, reinforced concrete pipe and vitrified clay pipe may be used for carrying acids and alkalies in corrosive soils.

14.3.1.2 Plastics. The use of chemically synthesized materials as substitutes for metals must be approved by the NAVFACENGCOM Headquarters. Plastics and other nonferrous fibers can significantly increase the toughness of concrete. Refer to NAVFAC DM-3.08, Exterior Distribution of Utility Steam, HTW, CHW, Fuel, Gas, and Compressed Air, for guidance and criteria for the use of inorganic piping materials. Refer to the American Concrete Institute (ACI) 544.1, State-of-the-Art Report on Fiber Reinforced Concrete.

14.3.2 Passive Metals. Metals which are passive to their environments may be used, such as:

a) copper and its alloys,

b) lead and its alloys,

c) iron alloys (austenitic gray, high silicon, iron-chromium-nickel, ni-resistant, ductile),

d) stainless steels (selective alloys),

e) hastelloys,

f) monel, and

g) columbium, zirconium, titanium.

14.3.3 Metal Protection.

14.3.3.1 Protective Coatings for Corrosion Control. See Table 15.

Table 15
Protective Coatings for Corrosion Control

Covering	Material	Environment	Metal Surface
Paint	Primer	Dry interior atmosphere	Equipment and piping.
	Shopcoat:		
	Alkyd	Humid exterior atmosphere	Equipment and piping.
	Phenolic	Fresh water immersion	Equipment and piping.
	Vinyl	Fresh and salt water immersion	Equipment and piping.
	Silicon (400° to 800°F)[1]	Hot atmosphere	Steel stacks.
	Aluminum flake (1,200°F)	Hot corrosive atmosphere	Steel stacks.
Coatings (5 to 20 mils).	Coal tar bitumen		Ferrous pipe.
	Coal tar bitumen	Underground and fresh water immersion	AWWA C203[2]
		Underground and salt water immersion	NAVFAC TS-09805.2[3]
	Asphalt		Not recommended.
	Polyvinyl chloride (PVC)	Underground	Pipe.
	Porcelain enamel (1,000°F)	Hot corrosive atmosphere	Steel stacks.
Linings (60 mils and more).	Plastics	Corrosive contents	Pipes and tanks as approved by NAVFAC
	Rubber	Corrosive contents	Pipes and tanks.
	Cement		Ferrous pipe.
	Lead	Corrosive contents	Pipes and tanks as approved by NAVFAC
Temporary	Grease		Storage of metals.
Galvanizing	Molten zinc bath	Corrosive atmospheres	Pipe and sheet metal.
Sherardizing	Zinc dust applied by cementation	Corrosive atmospheres	Base for paint on metals.
Electroplating	Zinc, cadmium, chromium, and nickel by electroplating.	Corrosive atmospheres	Ornamentation.
Metallizing	Molten spray of zinc aluminum, copper, stainless steel.	Corrosive atmospheres	Replace spent metal.

[1] Conversion to °C = (°F - 32)/1.8.
[2] American Water Works Association (AWWA), Coal-Tar Protective Coatings and Linings for Steel Water Pipelines - Enamel and Tape-Hot-Applied.
[3] NAVFAC TS-09805.2, Coating Systems (Vinyl and Epoxy) for Sheet-Steel Piling and Other Steel Waterfront Structures.

14.3.3.2 Ferrous Metals. Because ferrous metals are not passive to most environments, they must be protected by isolating them from their environments.

14.3.3.3 Aluminum,Magnesium,and Their Alloys Alminum,magnesium,and their alloys are actually used as sacrificial anodes. Alumninum alloys with aluminum (duraluminum)become corrosion resistant because of the rapid formation of a hard aluminum oxide that forms on the surface of the pure aluminum external surface.

14.3.4 Changes of Environment. Surroundings may be changed by any of the following methods:

14.3.4.1 Water Treatment. Refer to Section 11.

14.3.4.2 Inhibitor. These substances retard corrosion by increasing the polarization rate at either an anode or cathode metal or bath. They can also build up electrically resistant films in conduction paths between anodes and cathodes and cathodes. See Table 16 for inorganic corrosion inhibitors. Organic inhibitors are, for example, glucosates, amines, phenylhydrazines, and similar substances

14.3.4.3 Soil Alteration. Replace corrosive soils with sand or treated soils,or change soil characteristics by providing adequate drainage .

Table 16
Inoganic Inhibitors and Corrosive Systems

Inhibitor	Approx. Inhibitor Concentration (%)	Corrosive Environment	Metallic Systems
Glassy phosphates	Small amount	Water systems	Steel.
Potassium dichromate	0.05-0.2	Tap water	Iron-brass.
Potassium dihydrogen phosphate + sodium nitrite	+ 5.0	Seawater	Steel.
Potassium permanganate	0.10	0.30% N NaOH solution	Aluminum.
Sodium benzoate	0.5	0.03% NaCl solution	Mild steel.
Sodium carbonate	Small amount	Gas-condensate wells	Iron.
Sodium chromate	0.5	Cooling water	Electrical rectifier systems.
Sodium chromate	0.07	$CaC1_2$ brine	Cu, brass.
Sodium dichromate	0.025	Air-conditioning water	Air-conditioning equipment.
Sodium dichromate + sodium nitrate	0.1 + 0.05	Water	Heat-exchangers.
Sodium hexametaphos-phate	0.002	Water about pH 6	Lead.
Sodium metaphosphate	Small amount	Ammonia	Mild-steel condensers.
Sodium nitrite	0.005	Water	Mild-steel.
Sodium nitrite	20% of seawater	Seawater/distilled water mixtures.	
Sodium orthophosphate	1.0	Water pH 7.25	Iron.
Sodium silicate	Small amount	Seawater	Zn, Zn-Al alloys.

Section 15: MISCELLANEOUS CRITERIA

15.1 Site Considerations. Consideration should be given to local conditions where may it require modifications to definitive drawings and NFGS specifications (refer to Section 1). Some of these conditions to be considered are as follows:

a) general site selection as it affects substructure, flood protection, proximity to load, cooling water source, corrosion due to salt water spray, etc. (site elevations will also affect diesel engine output.),

b) climatic conditions which affect engine cooling system, building heating and ventilating, weatherproofing, etc.,

c) life expectancy of a plant which will affect the type of building material to be used,

d) availability and relative cost of various building materials,

e) availability and relative cost of various trained construction personnel, and

f) necessity for construction heating in cold climates.

15.2 Hazards Safety Protection.

15.2.1 Local Codes. All equipment shall comply with state and local Safety Codes.

15.2.2 National Industrial Safety Codes. The following codes apply:

a) The American National Standards Institute (ANSI) A12.1 Floor and Wall Openings, Railings, and Toe Boards.

b) ANSI A14.3 Ladders Fixed.

c) ANSI Z53.1 Color Code for Marking Physical Hazards.

d) 29 Congressional Federal Register (CFR) 1910, Occupational Safety Health Administration (OSHA) General Industry Standards.

15.2.3 Fire Protection. See Military handbook, MIL-HDBK-1008, Fire Protection for Facilities Engineering, Design, and Construction.

15.2.4 Security and Safety Protection. See NAVFAC DM-1 series, Architecture; NAVFAC DM-5.12, Civil Engineering, Fencing, Gates, and Guard Towers; and NAVFAC MIL-HDBK-1013/1, Design Guidelines for Physical Security of Fixed Land-Based Facilities.

15.3 Architectural Criteria. Refer to NAVFAC DM-1 series.

15.4.1 General Requirements. The definitive drawings (refer to Section 1) show the general plant arrangement.

15.3.1.1 Definitive Designs. In general, a diesel-electric generating type power plant should have two-level-type construction for Definitive Designs 1, 2 and 4, and one-level-type construction for Design 3. See Tables 1 and 10.

15.3.1.2 Building Extensions. Lean-to type extensions to the main generator building to house auxiliaries and switchgear should be used to reduce building volume.

15.3.1.3 Provisions for Future Expansion. Contract drawings of diesel-electric generating plant buildings should provide an easily removable end wall for future expansion and provision for removing generating units from the building.

15.3.2 Outdoor and Semi-Outdoor Plants. Plants without walls, or with some walls eliminated, may be feasible in warm and temperature climates thereby reducing construction costs. Proper measures must be taken against freezing of stationary water. Protection against wind, rain and typhoons must be considered, together with noise control requirements and security. Equipment that is weatherproofed for outdoor service saves costs of building construction; however, operation and maintenance of equipment is made more complicated and costly. Packaged, stand-alone units have their own enclosures and are allowed in smaller sizes; however, they must meet all other criteria. Plant site conditions should be studied and an economic study should be conducted to determine whether indoor or outdoor housings should be specified.

15.3.3 Arrangements. The following features for architectural arrangements should be considered:

a) minimize the total building area and volume where practicable, and also maintain adequate space for installation and for subsequent equipment servicing and replacement,

b) centralization of electrical equipment and controls,

c) adequate aisle and laydown space,

d) adaptability to various makes of equipment,

e) adaptability to definitive designs,

f) localization of operations,

g) ease of replacing equipment and extending the plant life,

h) ease of plant expansion,

i) loading and unloading fuel and equipment, and parking for automobiles and trucks,

j) toilets, lockers, showers, work shops, offices, storage, and control rooms,

k) equipment platforms with proper access,

l) access through floors into basement areas for installation, servicing and removal of equipment, and personnel access,

m) resistance to wind, storm and typhoon damage to the structure and to the internal equipment, and

n) acid-resistant floors and drains should be provided for battery rooms covered by definitive designs. A separate battery room may not be warranted for very small plants not covered by a definitive design.

15.3.4 Noise Control. Noise from the engine-generator units must be considered in the design. See DM-3.10, Noise and Vibration Control of Mechanical Equipment. The definitive drawings provide enclosed work spaces for supervisory and operating personnel with sound-reducing windows for observation of plant operating machinery. Acoustical treatment should be designed in accordance with the following consideration:

a) While it is extremely difficult to predict noise levels in engine-generating spaces, the data from three different engine manufacturers can be used to permit approximation of noise levels for initial design.

b) In engine-generating spaces, it may be impossible to economically reduce sound levels to those below hazardous area noise levels, i.e. 84 decibels (db) or below. After the plant is in operation, sound levels should be measured to determine what personal protection is required to meet Code of Federal Regulations (CFR) 29 CFR 1910, Occupational Safety and Health Administration (OSHA), Safety and Health Standards.

c) Design of rooms with operating personnel such as control areas should be acoustically treated to provide attenuation of maximum sound levels to 45 db under normal engine-generator operating conditions and 55 db when all engine-generator units are operated at their nameplate rating.

15.4 Structural Criteria. Refer to NAVFAC DM-2.01 Structural Engineering, General Requirements.

15.4.1 Foundations. Electric-generating plant foundations require careful design because sites are frequently on marshy or filled ground close to surface waters and/or to the groundwater table. A detailed subsurface study is necessary in all cases to properly access the structural needs for the building and equipment foundations. (Refer to Section 5 for engine-generator foundations.) Seismic requirements for the site shall be investigated as they pertain to foundations.

15.4.1.1 Extra Piling. Silencer and stack foundations, fuel oil tanks, and other heavy auxiliary equipment may require extra piling.

15.4.1.2 Definitive Designs. Definitive drawings (refer to Section 1) show the preferred building construction.

15.4.2 Floor Loads. The design of the engine room floor must provide for a minimum 200 lb/ft^2 (976 kg/m^2) live load.

15.4.3 Platforms and Ladders. Provide platforms with ladders at alllocations requiring access for operation, maintenance, and cleaning for systems that are more than 4 feet (1.2 meters) above the ground floor. Connect long platforms to two means of egress or ladders.

15.4.3.1 Ladders. Systems and access doors need only ladders for inspection.

15.4.3.2 Platforms. Toe guards and railings shall be provided on platforms.

15.4.4 Cranes and Hoists. See NAVFAC DM-38.01, Weight-Handling Equipment and Service Craft; for types and design criteria and also Section 5.

15.5 Typhoon and Seismic Considerations. Interior and exterior mechanical equipment and systems should be anchored, braced, or guyed (as required) to withstand the wind loads (pressures) and seismic zone lateral accelerations specified for design of structures. Seismic design shall comply with criteria and requirements indicated in NAVFAC P-355, Seismic Design for Buildings.

15.5.1 Piping and Raceway Systems. All systems should be designed to permit freedom of movement of the pipes or raceways caused by expansion and contraction but shall contain their lateral movement due to seismic occurrences. Penetration through building walls and floors should be made through sleeves, and with swing joints or other means of permitting independent pipe or raceway movements. All piping or raceways critical to the operation of the plant should be steel or other structurally strong materials, if possible, in lieu of brittle materials, such as plastic or cast iron. Materials containing asbestos shall not be used.

15.5.2 Equipment. All mechanical and electrical equipment and tanks should be securely anchored to their foundations. Supports for equipment should be steel in lieu of cast iron where practicable.

15.5.3 Controls. Control systems should be designed so that loss of the control media (air, hydraulic, or electric) will leave the control in a fail-safe position, capable of being operated manually.

15.6 Heating, Ventilating, and Air Conditioning. Refer to NAVFAC DM-3.03, and Department of Defense (DOD) 4270.1M, Construction Criteria Manual, for criteria.

15.6.1 Heating Diesel-Electric Generating Plant Buildings. Buildings for prime duty and standby/emergency duty diesel-electric generating plants should be heated and ventilated. Refer to NAVFAC DM-3.03, Heating, Ventilating, Air Conditioning, and Dehumidifying Systems for criteria. Heating and ventilating systems for control rooms, switchgear rooms, offices, and critical parts storage should be provided with a system separate from the main engine-generator and auxiliary room system.

15.6.1.1 Exhaust Gas Heat Recovery. Prime duty generating plant building and process heat should be provided by exhaust gas heat recovery boilers where economically feasible. Where the heat recovery boilers do not provide

sufficient output to satisfy the lads, jacket coolant and lubricant heat recovery should be considered, and then the use of auxiliary oil-fired heating boilers. A life-cycle economic analysis is required to justify the increased construction cost and maintenance of heat recovery systems.

15.6.1.2 Auxiliary Heating Boilers. Auxiliary oil-fired low-pressure heating boilers should be used to provide building heat for standby/emergency duty diesel-electric generating plants during periods when the plants are not in operation. For standby/emergency duty generating plants the use of exhaust and jacket coolant heat recovery systems usually are not economically feasible if plants are not operated on an extensive and regular basis. An economic analysis is required to justify the increased construction and maintenance cost of the auxiliary boilers and accessories, if the waste heat is available only on a part-time basis.

15.6.1.3 Combustion Air. Diesel engines may require heated combustion air if taken directly from the outside during periods of low outside ambient air temperature. Low combustion air temperature results in engine starting problems with most diesel engines. If combustion air is taken from inside the building during those periods, the makeup air will require filtering and heating or tempering before being delivered to the engine room. It may be more economical in some cases to provide engine jacket water and lubrication oil heating to provide minimum starting temperatures during such low-temperature applications.

15.6.2 Ventilating Diesel-Electric Generating Plant Buildings.

15.6.2.1 Engine Rooms. The following minimum considerations shall be used to determine ventilation requirements:

a) Radiant and conducted heat from the engine and may be as high as 7 percent of fuel input. Exact data should be secured from the diesel engine manufacturer.

b) Air intake requirements for ventilation (space cooling) and combustion air (if taken from the room interior) must be considered in sizing louvers and/or openings.

c) Consider radiator fan air requirements, if radiator units are installed inside the main generator room without dedicated cooling air supplied from the outside. Discharge air should be ducted to the outside. Provide bypass air to the interior during cold weather.

d) When the engine is running, cooling air makeup may be brought in through gravity roof ventilators, for engines with radiator units installed inside the main generator room. Roof ventilators will act as a natural draft exhaust when the engine is not operating.

e) Sidewall louvers should be provided for cooling air makeup and for room ventilation when roof ventilators are not practicable.

f) Consider freeze protection in all cases.

g) In no case shall ventilation be provided at lower rates than

given in Table 17.

h) Ventilating rates are based on 104deg. F (40deg. C) or 122 deg. F (50deg. C) ambient temperatures for the generators, motors, and switchgear. Higher permissible ambient temperatures and lower temperatures rises for the electric equipment will affect the rates accordingly. When an indoor engine room design temperature exceeds 122deg. F (50deg. C), use top-guided generator air discharges in conjunction with power roof ventilators to avoid recirculation. Maintain suitable ambient air temperatures entering the generators.

15.6.2.2 Battery Room. Battery rooms should normally be exhausted at a minimum rate of 800 cfm (22.6 cubic meters per minute) or 6 air-changes-per-hour, whichever is greater. This will prevent hazardous hydrogen gas buildups. Fans shall have nonsparking wheels and motors shall be located out of the air stream.

Table 17
Minimum Engine Room Ventilation

Summer Design Outdoor Dry Bulb Temperature of deg. F (deg. C)	Cubic Feet per Minute per Installed Kilowatt Generating Capacity of the Engine Room		
	Summer Design Outdoor Relative Humidity		
	Below 30%	30-50%	Above 50%
Above 100deg. (38deg.)	16	24	32
90deg. (32deg.) - 100deg. (38deg.)	12	16	24
Below 90deg. (32deg.)	8	12	16

15.6.3 Air Conditioning of Rooms. Air conditioning may be provided in control rooms, switchgear rooms, offices, critical parts storage, and repair rooms, where warranted by climatic conditions of the station. Mechanical ventilation may be adequate in many cases. Note that an economic analysis is required for air conditioning of swicthgear and mechanical equipment rooms. A DOD waiver is required.

15.7 Plumbing. Refer to NAVFAC DM-3.01, Plumbing Systems.

15.7.1 Drains. Provide drains for the following and for all drain and drip collection points:

a) pump bases,

b) cooling water from pump stuffing boxes, and similar sources,

c) demineralizers (acid and water), water filters, and softeners, and other water treatment systems,

d) diked areas for above ground oil storage (Diked area drains should be fitted with caps or valves for manual control and spill containment. Provide concrete sumps for drainage of diked areas.), and

e) miscellaneous drains for expansion tanks, heat exchangers, towers, radiators, compressed air receivers, air dryers, and similar equipment.

15.7.2 Water Line Equipment. Complete the following requirements and all connections called for in the definitive drawings (refer to Section 1).

a) connections for filling closed circulating systems,

b) a domestic hot water supply to toilet rooms and clean-up areas,

c) furnish hose bibbs on water lines for floor wash-down and similar uses, and

d) furnish fire hose at each end of the main generator room.

15.7.3 Battery Rooms Emergency Showers and Eye Wash Facilities. Provide battery rooms with emergency showers and eye wash facilities as specified by OSHA 1926.403, Battery Rooms and Battery Charging.

15.7.4 Compressed Air. Refer to Section 5 of this manual for comments and requirements on engine starting. Comply with the engine manufacturer's recommended sizes and pressures of compressor units. Starting air receivers shall be provided together with a station service air receiver when air starting is provided.

15.8 Electrical Criteria. Refer to NAVFAC DM 4.04, Electrical Engineering, Electrical Utilization Systems, for general electrical criteria.

15.8.1 Station Service Transformers. Station service transformers should be sized so that one transformer can be shut down without in any way compromising the ability of the plant to operate at full capacity.

15.8.2 Lighting. Minimum lighting intensities shall be in accordance with the Illumination Engineering Society (IES), Lighting Handbook requirements. Battery-operated emergency light sets should be provided in engine, switchgear, and control rooms as a minimum requirement. Emergency light sets should conform to the requirements of Federal Specification W-L-305, Light Set, General Illumination (Emergency or Auxiliary). Consideration should be given to using indirect and/or dimmable lighting in console areas to reduce glare on display panels.

15.8.3 Receptacles. Convenience outlets should be mounted generally on each building column of the generator space, approximately 15 ft to 25 ft (4.572 m to 7.62 m) on centers. Locate welding outlets (60 A, 480 V, 4-pole, 3-wire, grounding type) such that each outlet can be used for maintaining two engine-generator units.

15.8.4 Hazardous Area Requirements. Hazardous area requirements only apply where flammable and combustible fuels, e.g., gasoline, natural gas, or propane, are used to supply engine-generator units. Properly ventilated battery rooms do not require hazardous area treatment.

15.8.5 Electromagnetic Interference Requirements. Electromagnetic interference requirements (EMI) for engine generators are addressed in MIL-STD-461, Electromagnetic Emission and Susceptibility Requirements for the Control of Electromagnetic Interference, under requirement UM04. The emission and susceptibility requirements apply only to units supplying power to or used in critical areas. The requirements are mandatory only for smaller engine-generator unit sizes. Contact the command or the agency concerned to determine if electromagnetic control is needed. Emission and radiation susceptibility protection should be a requirement of the engine-generator manufacturer; such protection should not be provided by generator building shielding. EMI protection is standardly provided for voltage regulators.

15.8.6 Lightning Protection. Grounding and bonding protection requirements for electric-generating plants are covered in DM-4.06, Lightning and Cathodic Protection.

15.8.7 Energy Conservation. A minimum power factor of 0.85 is required. Where a power factor of 0.85 cannot be met by the use of energy-efficient motors, power factor correction must be provided by other means.

15.8.8 Controls and Alarm Systems. Electric power for engine and generator control and alarm systems should be supplied from the station battery. The starting system battery should not be used for this purpose. When the size of the engine-generator plant does not warrant a station battery, consider providing a battery backup system to allow safe plant shutdown during a commercial power outage.

15.9 Energy Monitoring and Control Systems. Energy Monitoring and Control systems (EMCS) are addressed in NAVFAC DM-4.09, Energy Monitoring and Control Systems, and in the following NAVFAC guide specifications:

a) NFGS-13947, Energy Monitoring and Control System (EMCS), Large System Configuration.

b) NFGS-13948, Energy Monitoring and Control System (EMCS), Medium System Configuration.

c) NFGS-13949, Energy Monitoring and Control System (EMCS), Small System Configuration.

d) NFGS-13950, Energy Monitoring and Control System (EMCS), Micro System Configuration.

PAGE 72 INTENTIONALLY BLANK

BIBLIOGRAPHY

Refer to Karl W. Stinson, Diesel Engineering Handbook, for a description of engineering fundamentals applying to diesel engine operation.

PAGE 74 INTENTIONALLY BLANK

REFERENCES

American Concrete Institute (ACI) Standard, 22400 West 7 Mile Road, Box 19150, Redford Station, Detroit, MI 48219.

544.1R-82	State-of-the-Art Report on Fiber Reinforced Concrete

American National Standards Institute (ANSI) Standards, 1430 Broadway, New York, NY 10018.

A12.1-73	Safety Requirements; Floor & Wall Openings, Railings, & and Toe Boards
A14.3-84	Safety Requirements for Fixed Ladders
B31.1	Power Piping
B36.10M-85	Welded and Seamless Wrought Steel Pipe
C37.02-79	Electrical Power System Device Function Numbers
Z53.1-79	Safety Color Code for Marking Physical Hazards

American Society of Heating, Refrigerating, and Air Conditioning Engineers (ASHRAE) Standards, 1791 Tullie Circle, N.E., Atlanta, GA 30329.

ASHRAE HANDBOOK-1984	SYSTEMS
ASHRAE Chapter 33-84	Water Treatment

American Society of Mechanical Engineers, (ASME) Standards, 345 East 47th Street, New York, NY 10017.

Boiler and Pressure Vessel Codes

SEC8-D-86	Pressure Vessels
SEC9-86	Qualification Standards for Welding and Brazing Procedures

American Society for Testing and Materials (ASTM) Standards, 1916 Race Street, Philadelphia, PA 19103.

A53-86	Specifications for Pipe, Steel, Black and Hot-Dipped, Zinc-Coated Welded and Seamless
E84-84	Test Method for Surface Burning Characteristics of Building Materials

American Water Works Association (AWWA) Standard, 6666 West Quincy Avenue, Denver, CO 80235.

C203-86	Standard for Coal-Tar Protective Coatings and Linings for Steel Water Pipelines - Enamel and Tape - Hot-Applied

Department of Defense (DOD) Standards, The Pentagon, Washington, DC 20301.

DEPPM 85-3	Third Party Funding of Facilities Energy Systems
4270.1-M	Department of Defense Construction Criteria Manual

Diesel Engineering Handbook, available from Business Journals, Inc., 22 South Smith Street, Norwalk, CT 06855. (Twelfth Edition, 1980).

Federal Specifications (Fed. Specs.).

VV-F-800C	Fuel Oil, Diesel
W-L-305D	Light Set, General Illumination (Emergency or Auxiliary)

Federal Specifications are available from the Commanding Officer, Naval Publications and Forms Center, 5801 Tabor Avenue, Philadelphia, PA 19120. Telephone: Autovon (DOD) only): 442-3321; Commercial: (215) 697-3321.

How to Determine the Economic Thickness of Insulation, available from Thermal Insulation Manufacturers Association (TIMA), 7 Kirby Plaza, P.O. Box 686, Mt. Kisko, NY 10549; 1986.

Institute of Electrical and Electronics Engineers (IEEE) Standards, 345 East 47th Street, New York, NY 10017.

126-59	Speed Governing of Internal Combustion Engine-Generator Units (R-1983)
446-80	Recommended Practice for Emergency and Standby Power Systems for Industrial and Commercial Applications

Lighting Handbook, available from Illumination Engineering Society (IES), 345 East 47th Street, New York, NY 10017, (1985 Edition).

Military Documents

MIL-F-16884H	Fuel Oil, Diesel Marine
MIL-J-5624L	Aviation Turbine Fuel, Grades JP-4 and JP-5

MIL-HDBK-1008	Fire Protection for Facilities Engineering Design, and Construction
MIL-STD-461B	Electromagnetic Emission and Susceptibility Requirements for the Control of Electro-magnetic Interference

Military Documents are available from the Commanding Officer, Naval Publications and Forms Center, 5801 Tabor Avenue, Philadelphia, PA 19120. Telephone: Autovon (DOD) only: 442-3321; Commercial: (215) 697-3321.

National Electrical Manufacturers Association (NEMA) Standard, 2101 L Street, N.W., Washington, DC 20037.

MG1-78	Motors and Generators (R-1981)

National Fire Protection Association (NFPA) Standards, Batterymarch Park, Quincy, MA 02269.

31-83	Installation of Oil Burning Equipment
37-84	Installation and Use of Stationary combustion Engines and Gas Turbines
70-87	National Electrical Code (NEC)

Naval Facilities Engineering Command (NAVFACENGCOM) Documents

DM-1 Series	Architecture
DM-1.03	Architectural Acoustics
DM-2.01	Structural Engineering, General Requirements
DM-2.02	Structural Engineering, Loads
MIL-HDBK-1002/3	Structural Engineering, Steel Structures
DM-2.04	Structural Engineering, Concrete Structures
DM-2.09	Masonry Structural Design for Buildings
DM-3.01	Plumbing Systems
DM-3.03	Heating, Ventilating, Air Conditioning, and Dehumidifying Systems
DM-3.05	Compressed Air and Vacuum Systems

DM-3.06	Central Heating Plants
MIL-HDBK-1003/8	Exterior Distribution of Utility Steam, High Temperature Water (HTW), Chilled Water (CHW), Fuel Gas, and Compressed Air Foundations and Earth Structures
DM-3.10	Noise and Vibration Control of Mechanical Equipment
DM-3.16	Thermal Storage Systems
DM-4.01	Electrical Engineering: Preliminary Design Considerations
DM-4.02	Electrical Engineering: Power Distribution Systems
MIL-HDBK-1004/3	Electrical Engineering: Switchgear and Relaying
MIL-HDBK-1004/4	Electrical Engineering: Electrical Utilization Systems
DM-4.06	Electrical Engineering: Lightning and Cathodic Protection
DM-4.07	Electrical Engineering: Wire Communication and Signal Systems
DM-4.09	Energy Monitoring and Control Systems
DM-5.07	Civil Engineering, Water Supply Systems
DM-5.08	Civil Engineering, Pollution Control Systems
DM-5.12	Civil Engineering, Fencing, Gates and Guard Towers
DM-7.01	Soil Mechanics
DM-7.02	Foundations and Earth Structures
MIL-HDBK-1013/1	Design Guidelines for Physical Security of Fixed Land-Based Facilities
DM-22	Petroleum Fuel Facilities
DM-33.01	Medical Facilities, Preliminary Design Considerations
DM-33.02	Naval Regional Medical Centers, Design and Construction Criteria

DM-33.03	Medical Clinics and Dental Clinics, Design and Construction Criteria
DM-38.01	Weight-Handling Equipment
MO-204	Electric Power System Analysis
NFGS-13947	Energy Monitoring and Control Systems (EMCS), Large System Configuration
NFGS-13948	Energy Monitoring and Control Systems (EMCS), Medium System Configuration
NFGS-13949	Energy Monitoring and Control Systems (EMCS), Small System Configuration
NFGS-13950	Energy Monitoring and Control Systems (EMCS), Micro System Configuration
NFGS-14334	Monorails with Manual Hoist
NFGS-14335	Monorails with Air Motor-Power Hoist
NFGS-14336	Cranes, Overhead Electric, Overruning Type
NFGS-14337	Cranes, Overhead Electric, Underrunning (Under 20,000 Pounds)
NFGS-15250	Insulation of Mechanical Systems
NFGS-15711	Hot-Water Heating System
NFGS-16202	Diesel-Electric Generating Plants (Design 1) 501 KW to 2500 KW Continuous-Duty units
NFGS-16203	Diesel-Electric Generating Plants (Design 2) 2,501 KW and Larger Continuous-Duty units
NFGS-16204	Diesel-Electric Generating Plants (Design 3) 301 KW to 1,000 KW Standby Emergency Duty Units
NFGS-16205	Diesel-Electric Generating Plants (Design 4) 1,001 KW to 3,000 KW Standby/Emergency Duty UnitsNFGS-16208Diesel Engine-Generator Sets 20 KW to 500 KW Prime Duty Units and 10 KW to 300 KW Standby/Emergency Duty Units
NFGS-16208	Diesel Engine-Generator Sets 20 KW to 500 KW Prime Duty Units and 10 KW to 300 KW Standby/Emergency Duty Units
OPNAVINST-4100.6A	Energy Financing and Source Selection Criteria for Shore Facilities

OPNAVINST-5100.23B	Navy Occupational Safety and Health Program
P-89	Engineering Weather Data
P-272 (Part II)	Definitive Designs for Naval Shore Facilities
P-355	Seismic Design for Buildings
P-442	Economic Analysis Handbook
SPECNAVINST-7000.14B	Economic Analysis and Program Evaluation for Navy Resource Management
TS-09805.2	Coating Systems (Vinyl and Epoxy) for Sheet-Steel Piling and Other Steel Waterfront Structures

Department of Defense activities may obtain copies of Design Manuals and P-Publications OPNAVINST, SECNAVINST, and NFGS documents from the Commanding Officer, Naval Publications and Forms Center, 5801 Tabor Avenue, Philadelphia, PA 19120. Department of Defense activities must use the Military Standard Requisitioning and Issue Procedure (MILSTRIP), using the stock control number obtained from NAVSUP Publication 2002.

Other Government Agencies and commercial organizations may procure Design Manuals and P-Publications from the Superintendent of Documents, U.S. Government Printing Office, Washington, DC 20402.

Occupational Safety and Health Administration (OSHA) Standards, U.S. Government Printing Office, Washington, DC 20402.

29 CFR 1910-1986	General Industry Standards
1926.403-1986	Battery Rooms and Battery Charging

Uniform Building Code, available from International Conference of Building Officials (IBCO), 5360 South Workman Mill Road, Whittier, CA 90601, 1985 Edition.

Water Conditioning Technical Manual, available from National Well Water Association (NWWA), 500 North Wilson Bridge Road, Worthington, OH 43085, 1986.

CUSTODIAN:
NAVY - YD

PREPARING ACTIVITY
NAVY - YD

PROJECT NO.
FACR-0206