UFC 3-555-01N
16 January 2004

UNIFIED FACILITIES CRITERIA (UFC)

DESIGN: 400 HERTZ MEDIUM VOLTAGE CONVERSION/DISTRIBUTION AND LOW VOLTAGE UTILIZATION SYSTEMS

APPROVED FOR PUBLIC RELEASE; DISTRIBUTION UNLIMITED

UNIFIED FACILITIES CRITERIA (UFC)

DESIGN: 400 HERTZ MEDIUM VOLTAGE CONVERSION/DISTRIBUTION AND LOW VOLTAGE UTILIZATION SYSTEMS

Any copyrighted material included in this UFC is identified at its point of use.
Use of the copyrighted material apart from this UFC must have the permission of the copyright holder.

U.S. ARMY CORPS OF ENGINEERS (Preparing Activity)

NAVAL FACILITIES ENGINEERING COMMAND

AIR FORCE CIVIL ENGINEERING SUPPORT AGENCY

Record of Changes (changes indicated by **1**\ ... /**1**/)

Change No.	Date	Location

FOREWORD

The Unified Facilities Criteria (UFC) system is prescribed by MIL-STD 3007 and provides planning, design, construction, sustainment, restoration, and modernization criteria, and applies to the Military Departments, the Defense Agencies, and the DoD Field Activities in accordance with USD(AT&L) Memorandum dated 29 May 2002. UFC will be used for all DoD projects and work for other customers where appropriate.

UFC are living documents and will be periodically reviewed, updated, and made available to users as part of the Services' responsibility for providing technical criteria for military construction. Headquarters, U.S. Army Corps of Engineers (HQUSACE), Naval Facilities Engineering Command (NAVFAC), and Air Force Civil Engineer Support Agency (AFCESA) are responsible for administration of the UFC system. Defense agencies should contact the preparing service for document interpretation and improvements. Technical content of UFC is the responsibility of the cognizant DoD working group. Recommended changes with supporting rationale should be sent to the respective service proponent office by the following electronic form: Criteria Change Request (CCR). The form is also accessible from the Internet sites listed below.

UFC are effective upon issuance and are distributed only in electronic media from the following sources:

- Unified Facilities Criteria (UFC) Index http://65.204.17.188//report/doc_ufc.html.
- USACE TECHINFO Internet site http://www.hnd.usace.army.mil/techinfo/index.htm.
- NAVFAC Engineering Innovation and Criteria Office Internet site http://criteria.navfac.navy.mil.
- Construction Criteria Base (CCB) system maintained by the National Institute of Building Sciences at Internet site http://www.nibs.org/ccb.

Hard copies of UFC printed from electronic media should be checked against the current electronic version prior to use to ensure that they are current.

AUTHORIZED BY:

DONALD L. BASHAM, P.E.
Chief, Engineering and Construction Division
U.S. Army Corps of Engineers

DR. JAMES W WRIGHT, P.E.
Chief Engineer
Naval Facilities Engineering Command

KATHLEEN I. FERGUSON, P.E.
The Deputy Civil Engineer
DCS/Installations & Logistics
Department of the Air Force

Dr. GET W. MOY, P.E.
Director, Installations Requirements and Management
Office of the Deputy Under Secretary of Defense (Installations and Environment)

CONTENTS

Page

CHAPTER 1 INTRODUCTION

Paragraph 1-1 PURPOSE AND SCOPE 1-1
1-2 APPLICABILITY 1-1
1-3 REFERENCES 1-1

APPENDIX A MIL-HDBK 1004/5, JUNE 1993…...……..…… A-1

CHAPTER 1

INTRODUCTION

1-1 **PURPOSE AND SCOPE**. This UFC is comprised of two sections. Chapter 1 introduces this UFC and provides a listing of references to other Tri-Service documents closely related to the subject. Appendix A contains the full text copy of the previously released Military Handbook (MIL-HDBK) on this subject. This UFC serves as criteria until such time as the full text UFC is developed from the MIL-HDBK and other sources.

This UFC provides general criteria for 400-hertz medium voltage conversion/distribution and low voltage utilization systems.

Note that this document does not constitute a detailed technical design, maintenance or operations manual, and is issued as a general guide to the considerations associated with design of economical, efficient and environmentally acceptable heating plants.

1-2 **APPLICABILITY**. This UFC applies to all Navy agencies and contractors preparing designs for 400 hertz medium voltage conversion/distribution and low voltage utilization systems.

1-2.1 **GENERAL BUILDING REQUIREMENTS**. All DoD facilities must comply with UFC 1-200-01, *Design: General Building Requirements*. If any conflict occurs between this UFC and UFC 1-200-01, the requirements of UFC 1-200-01 take precedence.

1-2.2 **SAFETY**. All DoD facilities must comply with DODINST 6055.1 and applicable Occupational Safety and Health Administration (OSHA) safety and health standards.

NOTE: All **NAVY** projects, must comply with OPNAVINST 5100.23 (series), *Navy Occupational Safety and Health Program Manual*. The most recent publication in this series can be accessed at the NAVFAC Safety web site: www.navfac.navy.mil/safety/pub.htm. If any conflict occurs between this UFC and OPNAVINST 5100.23, the requirements of OPNAVINST 5100.23 take precedence.

1-2.3 **FIRE PROTECTION**. All DoD facilities must comply with UFC 3-600-01, *Design: Fire Protection Engineering for Facilities*. If any conflict occurs between this UFC and UFC 3-600-01, the requirements of UFC 3-600-01 take precedence.

1-2.4 **ANTITERRORISM/FORCE PROTECTION**. All DoD facilities must comply with UFC 4-010-01, *Design: DoD Minimum Antiterrorism Standards for Buildings*. If any conflict occurs between this UFC and UFC 4-010-01, the requirements of UFC 4-010-01 take precedence.

APPENDIX A

MIL-HDBK 1004/5
400 HERTZ MEDIUM VOLTAGE CONVERSION/DISTRIBUTION AND LOW VOLTAGE UTILIZATION SYSTEMS

INCH-POUND

MIL-HDBK-1004/5
15 June 1993
SUPERSEDING
DM-04.05
30 March 1987

MILITARY HANDBOOK

400-HERTZ MEDIUM-VOLTAGE CONVERSION/DISTRIBUTION AND LOW-VOLTAGE UTILIZATION SYSTEMS

AMSC N/A
AREA FACR

DISTRIBUTION STATEMENT A. APPROVED FOR PUBLIC RELEASE: DISTRIBUTION IS UNLIMITED

ABSTRACT

Basic design guidance is presented for use by experienced architects and engineers. The contents cover 400-Hertz (Hz) electrical design considerations, such as the estimates of loads and requirements for the installation and selection of frequency conversion and electric distribution systems with a special regard to the use of centralized conversion equipment utilizing medium-voltage distribution.

FOREWORD

This handbook is one of a series developed from an evaluation of facilities in the shore establishment, from surveys of the availability of new materials and construction methods, and from selection of the best design practices of the Naval Facilities Engineering Command (NAVFACENGCOM), other Government agencies, and the private sector. This handbook uses, to the maximum extent feasible, national professional society, association, and institute standards in accordance with NAVFACENGCOM policy. Deviations from these criteria should not be made without prior approval of NAVFACENGCOM Headquarters (Code 04).

Design cannot remain static any more than the naval functions it serves or the technologies it uses. Accordingly, recommendations for improvement are encouraged from within the Navy and from the private sector and should be furnished to Commanding Officer, Southern Division, Naval Facilities Engineering Command (SOUTHNAVFACENGCOM), Code 04A3, P.O. Box 10068, Charleston, SC 29411-0068; telephone (803) 743-0458.

THIS HANDBOOK SHALL NOT BE USED AS A REFERENCE DOCUMENT FOR PROCUREMENT OF FACILITIES CONSTRUCTION. IT IS TO BE USED IN THE PURCHASE OF FACILITIES ENGINEERING STUDIES AND DESIGN (FINAL PLANS, SPECIFICATIONS, AND COST ESTIMATES). DO NOT REFERENCE IT IN MILITARY OR FEDERAL SPECIFICATIONS OR OTHER PROCUREMENT DOCUMENTS.

ELECTRICAL ENGINEERING CRITERIA MANUALS

Criteria Manual	Title	PA
MIL-HDBK-1004/1	Electrical Engineering Preliminary Design Considerations	HQTRS
MIL-HDBK-1004/2	Power Distribution Systems	PACDIV
MIL-HDBK-1004/3	Switchgear and Relaying	HQTRS
MIL-HDBK-1004/4	Electrical Utilization Systems	HQTRS
MIL-HDBK-1004/5	400-Hertz Medium Voltage Conversion/ Distribution and Low-Voltage Utilization Systems	SOUTHDIV
MIL-HDBK-1004/6	Lightning Protection	HQTRS
MIL-HDBK-1004/7	Wire Communication and Signal Systems	HQTRS
DM-4.09	Energy Monitoring and Control Systems (ARMY)	HQTRS
MIL-HDBK-1004/10	Electrical Engineering Cathodic Protection	NCEL

400-HERTZ MEDIUM-VOLTAGE CONVERSION/DISTRIBUTION AND LOW-VOLTAGE UTILIZATION SYSTEMS

CONTENTS

			Page
Section 1		INTRODUCTION	
	1.1	Scope	1
	1.2	Cancellation	1
	1.3	Policy	1
Section 2		GENERAL CONSIDERATIONS	
	2.1	Usage	2
	2.2	Types of Systems	2
	2.2.1	Rotary Converters	2
	2.2.2	Solid State Converters	2
	2.3	Distribution Systems	2
	2.3.1	Low-Voltage Systems	2
	2.3.2	Medium-Voltage System	3
	2.3.3	Flight-line Electrical Distribution Set (FLEDS)	3
	2.4	Surveys	3
	2.4.1	Energy Conservation	3
	2.4.2	Economic Studies	3
	2.5	Types of Loads	3
	2.5.1	Aircraft	3
	2.5.2	Avionics	10
	2.5.3.	Other Facilities	10
	2.5.4	Special Requirements	10
	2.6	Consideration of Systems Voltage Parameters	10
	2.6.1	Development of Guidelines for Parameters	10
	2.6.2	Items Affecting Design	10
	2.6.2.1	Acceptable End-Voltage Requirements	10
	2.6.2.2	Equipment and Cable Parameters	11
	2.6.2.3	Unit Loads	11
	2.6.3	Maximum Cable Length and Loads	11
	2.6.3.1	Allowable Medium-Voltage Distribution Level	11
	2.6.3.2	Maximum Cable Lengths	11
	2.6.3.3	Exceeding Limiting Cable Lengths	11
	2.6.3.4	Rationale of Maximum Cable Lengths	12
Section 3		DESIGN REQUIREMENTS	
	3.1	Design Procedures	16
	3.1.1	Data Gathering	16
	3.1.2	System Layout	16
	3.1.3	Equipment Layout	16
	3.1.4	Design Aspects	16
	3.1.4.1	Protective Device Operation	16
	3.1.4.2	Surge Arresters	17

Page

3.1.4.3 Bus and Cable Material 17
3.1.4.4 Conduit 17
3.2 Medium-Voltage Distribution System Design 17
3.2.1 Type of Distribution 17
3.2.2 Practicable Distribution Area 18
3.2.3 Shunt Reactor Capacity 18
3.2.3.1 Field Adjustment 19
3.2.3.2 Nominal Rating Sizing 19
3.3 Central Plant Design 19
3.3.1 Reliability 19
3.3.2 System 60-Hertz Input Power 19
3.3.2.1 Primary Feeder Source 19
3.3.2.2 Diesel-Engine Generator Source 19
3.3.2.3 Transformer 20
3.3.3 System 400-Hertz Conversion Capacity 20
3.3.4 Frequency Conversion Assemblies 20
3.3.4.1 Motor Generator Units 20
3.3.4.2 Other Components 23
3.3.5 Feeder Distribution Center 26
3.3.5.1 Metering 26
3.3.5.2 Shunt Reactors 26
3.3.6 Central Plant Buildings and Other Equipment Shelters . 26
3.4 Low-Voltage Utilization System Design 26
3.4.1 Low-Voltage System Equipment 27
3.4.1.1 Utilization Service Assemblies 27
3.4.1.2 Fixed Service Point Units 27
3.4.2 Low-Voltage Cable Limitations 27
3.4.3 Feeder Cable Connection 29
3.4.4 Cable Design Requirements 29

Section 4 DESIGN ANALYSIS
4.1 General Requirements 30
4.2 Scope 30
4.3 Basis for Design 30
4.3.1 Type of System 30
4.3.2 400-Hertz Conversion 30
4.3.3 60-Hertz Input Power 30
4.3.3.1 Adequacy 30
4.3.3.2 Transformer Stations 30
4.3.3.3 Generator Source 32
4.3.4 Distribution 33
4.4 Design Computations 33
4.4.1 Capacity and Other Calculations 33
4.4.2 Short Circuits 33
4.4.2.1 400-Hertz Systems 33
4.4.2.2 Analysis 33

Page

APPENDIX A: Analysis of 400-Hertz Centralized Power Distribution Systems 38

APPENDIX B: Analysis of 400-Hertz Low Voltage Distribution Systems 81

FIGURES

1 Typical 400-Hz Medium-Voltage System 4
1a Typical 400-Hz Low-Voltage System 5
1b Typical 400-Hz Low-Voltage System 6
1c Major Components of FLEDS 7
1d Examples of a Typical FLEDS System 8
2 Example of Central Plant/Hangar Site Plan 18
3 Typical 400-Hz Central Plant 21
4 Single Line Diagram of a 60-Hz Low-Voltage Switchboard 22
5 Single Line Diagram of a Frequency Conversion Assembly 24
6 Single Line Diagram of a Feeder Distribution Center . . 25
7 Single Line Diagram of a Utilization Service Assembly . 28
8 Voltage-Drop Calculation Single Line and Formulas . . . 35
9 Voltage-Drop Calculations Using Actual Values 36
10 Short-Circuit Analysis 37
A-1 5,000-Foot Feeder Cable - Case Al 39
A-2 10,000-Foot Feeder Cable - Case A2 43
A-3 15,000-Foot Feeder Cable - Case A3 43
A-4 20,000-Foot Feeder Cable - Case A4 44
A-5 25,000-Foot Feeder Cable - Case A5 44
A-6 30,000-Foot Feeder Cable - Case A6 45
A-7 40,000-Foot Feeder Cable - Case A7 45
A-8 One-Unit Steady State Load on Feeder - Case Dl 49
A-9 Two-Unit Steady State Load on Feeder - Case D2 49
A-10 Four-Unit Steady State Load on Feeder - Case D3 50
A-11 Six-Unit Steady State Load on Feeder - Case D4 50
A-12 Eight-Unit Steady State Load on Feeder - Case D5 . . . 51
A-13 Initial One-Unit Load Plus Stepped One-Unit Load . . . 51
A-14 Initial Two-Unit Load Plus Stepped One-Unit Load . . . 52
A-15 Initial Three-Unit Load Plus Stepped One-Unit Load . . 52
A-16 Initial Four-Unit Load Plus Stepped One-Unit Load . . . 53
A-17 40-Foot Service Cable - Case Bl 58
A-18 80-Foot Service Cable - Case B2 58
A-19 120-Foot Service Cable - Case B3 59
A-20 160-Foot Service Cable - Case B4 59
A-21 200-Foot Service Cable - Case B5 60
A-22 100-Foot Service Cable Plus Aircraft Cable-Case B11 . . 60
A-23 150-Foot Service Cable Plus Aircraft Cable-Case B12 . . 61
A-24 200-Foot Service Cable Plus Aircraft Cable-Case B13 . . 61

Page

A-25 250-Foot Service Cable Plus Aircraft Cable-Case B14 . . 62
A-26 300-Foot Service Cable Plus Aircraft Cable-Case B15 . . 62
A-27 100-Ampere Load Change - Case C1 67
A-28 150-Ampere Load Change - Case C2 67
A-29 200-Ampere Load Change - Case C3 68
A-30 250-Ampere Load Change - Case C4 68
A-31 Initial One-Unit Load Plus Stepped Two-Unit Load . . . 69
A-32 Initial One-Unit Load Plus Stepped Three-Unit Load . . 69
A-33 Initial Three-Unit Load Plus Stepped Two-Unit Load . . 70
A-34 Initial Three-Unit Load Plus Stepped Three-Unit Load . 70
A-35 Initial One-Unit Load Plus Induction-Motor Starting . . 71
A-36 Initial Two-Unit Load Plus Induction-Motor Starting . . 71
A-37 Initial Three-Unit Load Plus Induction-Motor Starting . 72
A-38 Initial Four-Unit Load Plus Induction-Motor Starting . 72
A-39 Comparison of Feeder-Load Capacity at Different Voltage Levels 74
A-40 Three-Section Passive-Element Filter 77
A-41 System Connection for One (Case 1) or Two (Case 2) Rectifier-Type Unit Loads 77
B-1 Simplified Circuit Diagram and Formulas 82
B-2 Typical 400-Hz Low Voltage Distribution System 83
B-3 Typical 400-Hz Low Voltage System 84
B-4 400-Hz Voltage Drop Calculations 85

TABLES

1 400-Hertz Aircraft Loads 9
2 System Demand Factors 9
3 Frequency Conversion Assembly Parameters 12
4 Utilization Service Assembly Parameters 13
5 Cable Parameters 14
6 Maximum Unit Loads on Feeders 14
7 Maximum 400-Hertz Medium-Voltage Cable/Lengths and Loads 15
8 Maximum 400-Hertz Low-Voltage Cable Lengths 15
9 Typical Full-Load Efficiencies 23
10 400-Hz Load Calculations 31
11 400-Hz Central Plant Sizing 32
12 Determination of Acceptable Utilization Connections . . 34
A-1 Feeder Cable Length Versus Loads 41
A-2 Voltage Drop on a 15,000-Foot Feeder Cable 47
A-3 90-kVA Line Drop Compensator's Per-Unit Impedance . . . 56
A-4 Service Cable Lengths Versus Loads and Feeder Cable Lengths 63
A-5 90-kVA Line Drop Compensator's Per-Unit Voltage Increase 64
A-6 Per-Unit Impedance Values Versus Feeder-Cable Lengths . 74

Page

A-7 Resonant Frequencies and Harmonic Voltages 76
B-1 Effective A.C. Resistance and Inductance Values for THW, RHW Copper Single Conductors at 400-Hz 87
B-2 Effective A.C. Resistance and Inductance Values for XHHW Copper Single Conductors at 400-Hz 88
B-3 Effective A.C. Resistance and Inductance Values for THHN Copper Single Conductors at 400-Hz 89
B-4 Effective A.C. Resistance and Inductance Values for THW, RHW Aluminum Single Conductors at 400-Hz 90
B-5 Effective A.C. Resistance and Inductance Values for XHHW Aluminum Single Conductors at 400-Hz 91
B-6 Effective A.C. Resistance and Inductance Values for THHN Aluminum Single Conductors at 400-Hz 92
B-7 Effective A.C. Resistance and Inductance Values for THW, RHW Copper Three Conductor Jacketed Cable at 400-Hz 93
B-8 Effective A.C. Resistance and Inductance Values for XHHW Copper Three Conductor Jacketed Cable at 400-Hz 94
B-9 Effective A.C. Resistance and Inductance Values for THHN Copper Three Conductor Jacketed Cable at 400-Hz 95
B-10 Effective A.C. Resistance and Inductance Values for THW, RHW Aluminum Three Conductor Jacketed Cable at 400-Hz 96
B-11 Effective A.C. Resistance and Inductance Values for XHHW Aluminum Three Conductor Jacketed Cable at 400-Hz 97
B-12 Effective A.C. Resistance and Inductance Values for THHN Aluminum Three Conductor Jacketed Cable at 400-Hz 98

REFERENCES 99

Section 1: INTRODUCTION

1.1 Scope. This handbook presents information necessary for the proper design of the 400-Hertz (Hz) conversion, distribution, and utilization systems that supply power to aircraft and avionic support equipment for aerospace electrical subsystems. Special regard is paid to systems utilizing medium-voltage distribution.

1.2 Cancellation. This military handbook, MIL-HDBK-1004/5, cancels and supersedes NAVFAC DM-4.05, 400-Hertz Medium-Voltage Conversion/Distribution and Low-Voltage Utilization Systems, dated 30 March 1987.

1.3 Policy. It is Naval Facilities Engineering Command (NAVFACENGCOM) policy to provide our customers with reliable, maintainable, energy efficient 400-Hertz Systems for selected mission essential equipment. Solid state systems are preferred to reduce utility and maintenance costs.

Section 2: GENERAL CONSIDERATIONS

2.1 Usage. Aerospace electrical equipment generally operates at an input of 400 Hz. Electrical power is supplied by aircraft generators, which normally receive their energy from the aircraft engines. Three-phase aircraft generators deliver 3,000 to 4,000 RPM, depending upon engine speed, which is synthesized into 400-Hz output voltage for distribution to aircraft equipment. Large aircraft may have several hundred electric motors, and the use of 400 Hz provides a considerable weight saving. Three-phase, 400 Hz, open-frame units (1 to 15 horsepower in size, with speeds of 12,000 to 24,000 revolutions per minute) developed for aircraft have weights averaging 2 pounds per horsepower (0.9 kilograms per horsepower). An open, dripproof, 60 Hz, 1,800 revolutions-per-minute unit of one horsepower weighs about 40 pounds (18 kilograms). For an expanded description of aerospace electric subsystems, see Fink and Beaty, Standard Handbook for Electrical Engineers (Section 23).

2.2 Types of Systems. Systems supplying 400 Hz for ground-power operations use frequency conversion equipment to change 60-Hz input to 400-Hz output. Rotary converters (motor generator sets) or solid state converters are used for this purpose. Fixed service point units to which avionics equipment and aircraft are connected are supplied from either nearby frequency conversion assemblies over a low-voltage feeder system or from a more remotely located 400-Hz central plant using medium-voltage feeders.

2.2.1 Rotary Converters. Rotary converters or motor generator (MG) sets are used for both low and medium voltage systems. These units are usually limited to installation in industrial locations due to the high level of noise produced.

2.2.2 Solid State Converters. Solid state converters are used only for low-voltage systems. The noise levels produced by these units as compared to MG sets are substantially less. The industry trend is to replace rotary machinery with solid state converters.

2.3 Distribution Systems. Fixed service point units to which avionics equipment and aircraft are connected are supplied from either nearby frequency conversion assemblies over a low-voltage feeder system or from a more remotely located 400-Hz central plant using medium-voltage feeders.

2.3.1 Low-Voltage Systems. Generally low-voltage systems distribute voltages less than 600 volts. Because the reactance of an electric system is greater at 400 Hz than at 60 Hz, attention must be given to both circuit length and conductor size to maintain acceptable voltage regulation. Consequently, when loads and distribution distances increase, low-voltage systems require use of excessive feeder sizes and installation of numerous local frequency conversion assemblies. When numerous local frequency conversion assemblies are used, the reliability of the system is increased. A typical, 400 Hz low-voltage system is shown on Figures 1a and 1b. Detailed requirements are provided in Appendix B.

2.3.2 Medium-Voltage System. The development of a medium-voltage system which distributes three-phase, 400-Hz electric power at 4,160 volts can provide a more economical system. A typical, 400-Hz medium-voltage system is shown on Figure 1. Detailed requirements are provided in Appendix A.

2.3.3 Flight-line Electrical Distribution Set (FLEDS). A FLEDS system may be used in conjunction with the low-voltage or medium-voltage system. The components of an individual FLED set are shown in Figure 1c. A FLED system consists of a number of FLED sets which distribute 200Y/115 volts at 400 Hz to a maximum of two aircraft per FLED set. Normally the FLED system is procured and installed by NAVAIR, therefore, certain design characteristics to support the FLED system must be obtained from NAVAIR. Examples of a typical FLED system are shown in Figure 1d.

2.4 Surveys. Before replacing existing local low-voltage systems with a central medium-voltage system, make preliminary surveys to ensure the cost effectiveness of the replacement. Generally, consider only naval and Marine Corps facilities having existing 400-Hz requirements of 500 kilovoltamperes (kVA) or more for replacement with central medium-voltage systems.

2.4.1 Energy Conservation. Full load efficiency of the motor-generator set portion of frequency conversion assemblies ranges from 73 to 88 percent, depending on the size of the sets and the type of motor drive (induction or synchronous). The use of many sets, operating underloaded, lowers efficiencies, increases energy usage and cost, and probably increases maintenance and shortens operating life.

2.4.2 Economic Studies. When preliminary surveys and studies indicate that a central system may be economically feasible, a complete life-cycle cost analysis may be necessary. Make field measurements of the actual demand loads on each existing low-voltage 400-Hz system. Determine power requirements, characteristics, and locations of all existing utilization equipment and service points. The using agency shall advise of any changes in load requirements contemplated to serve anticipated mission changes so that this information may be included in determining the capacity required for a central system.

2.5 Types of Loads. Various types of loads on naval stations and Marine Corps bases require 400-Hz electric-power input. The power factor of these loads varies from 0.8 to 1.0.

2.5.1 Aircraft. The number of each type of aircraft serviced at naval stations and Marine Corps bases determine the total demand. For computation of 400-Hz aircraft loads, use the maximum load in Table 1 with a demand factor applied to the total load as given in Table 2.

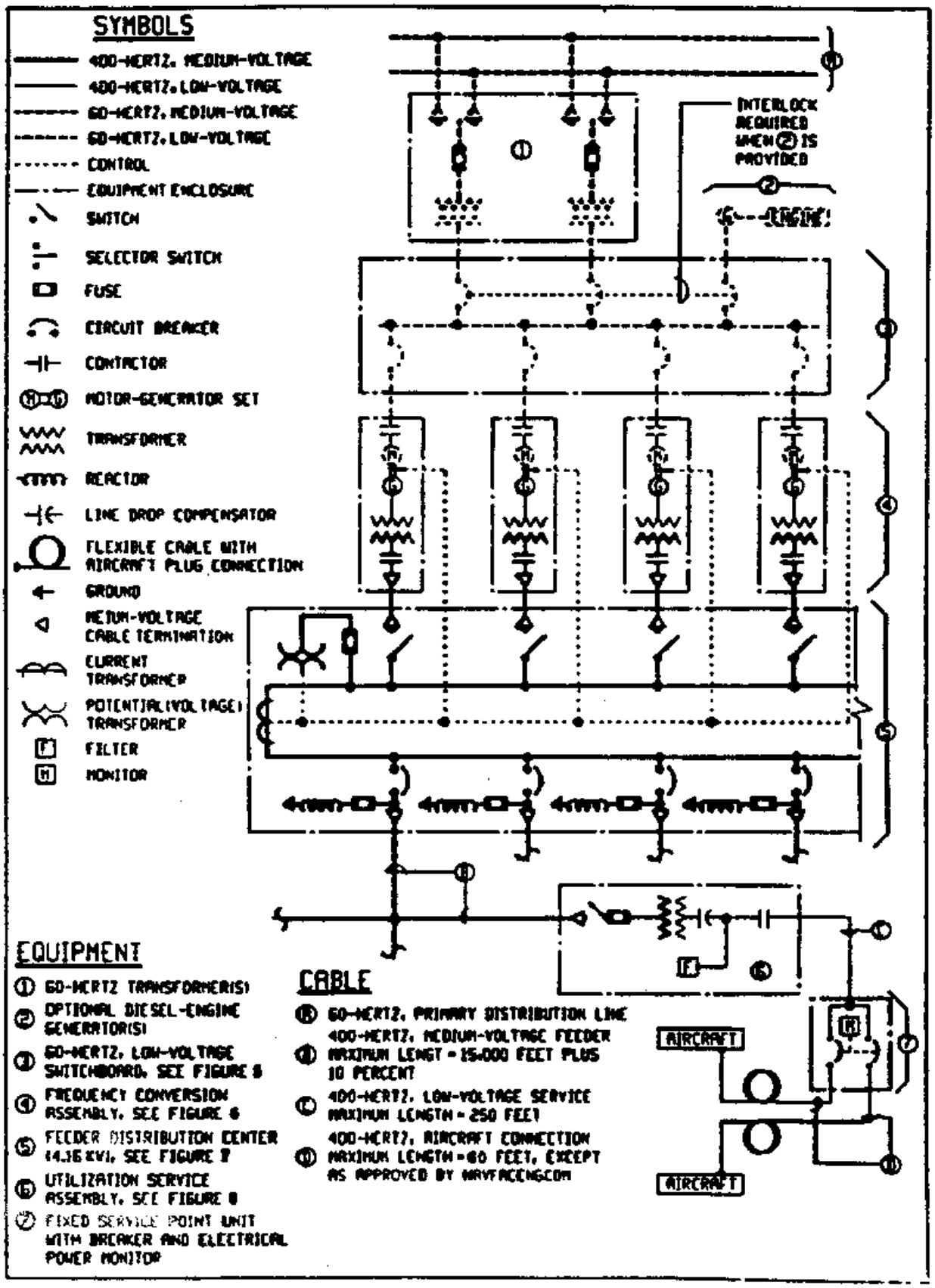

Figure 1
Typical 400-Hz Medium-Voltage System

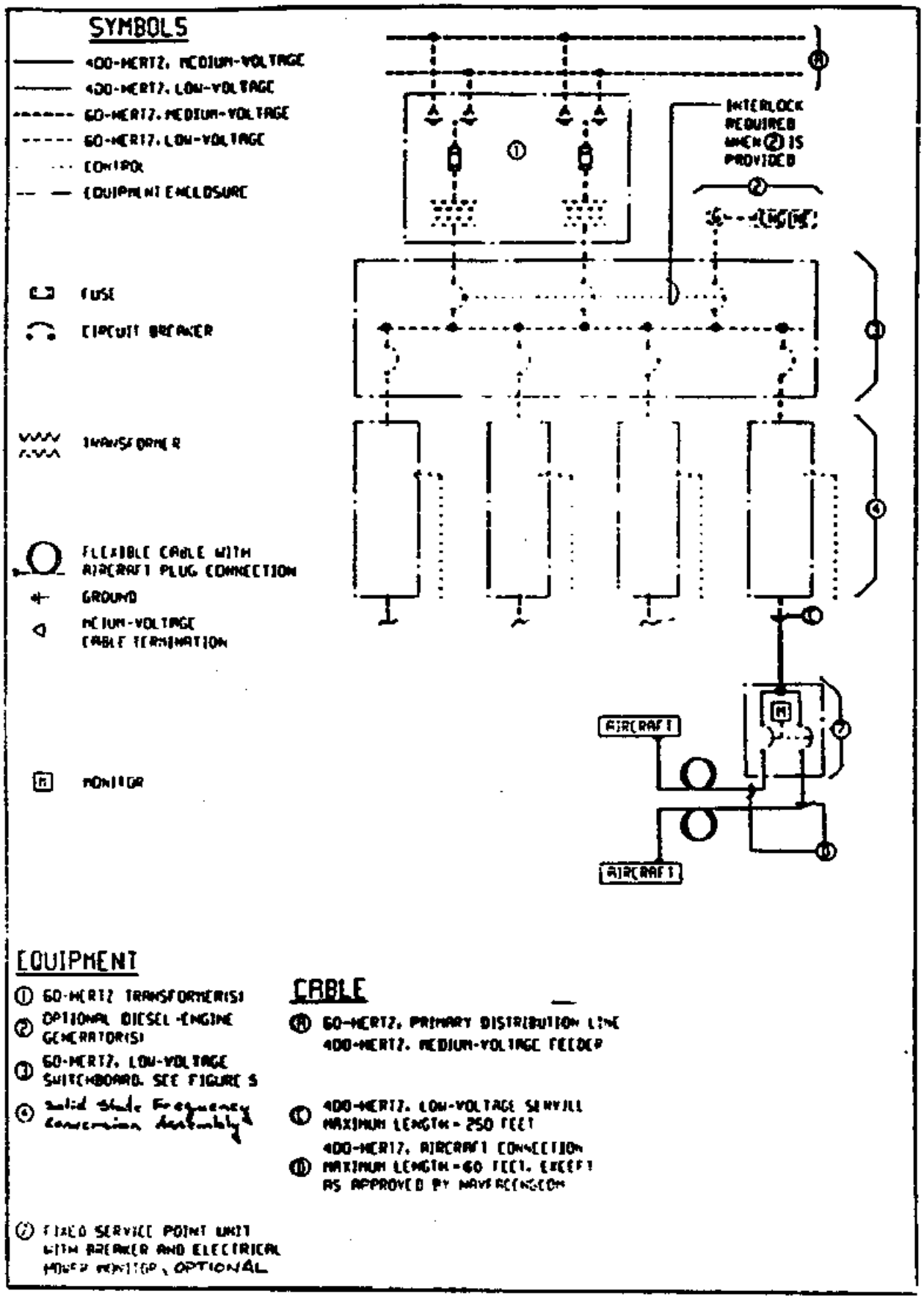

Figure 1a
Typical 400-Hz Low-Voltage System

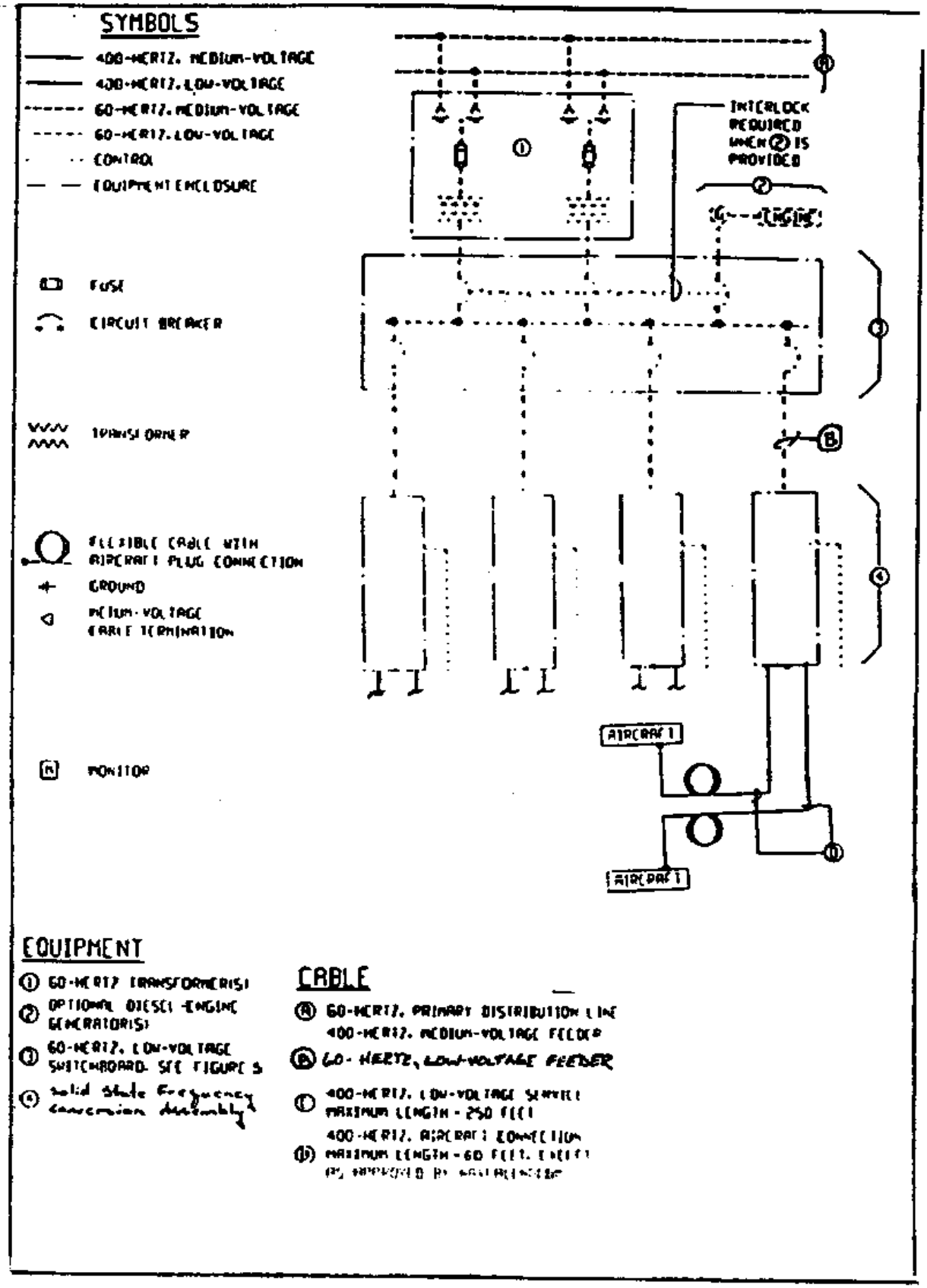

Figure 1b
Typical 400-Hz Low-Voltage System

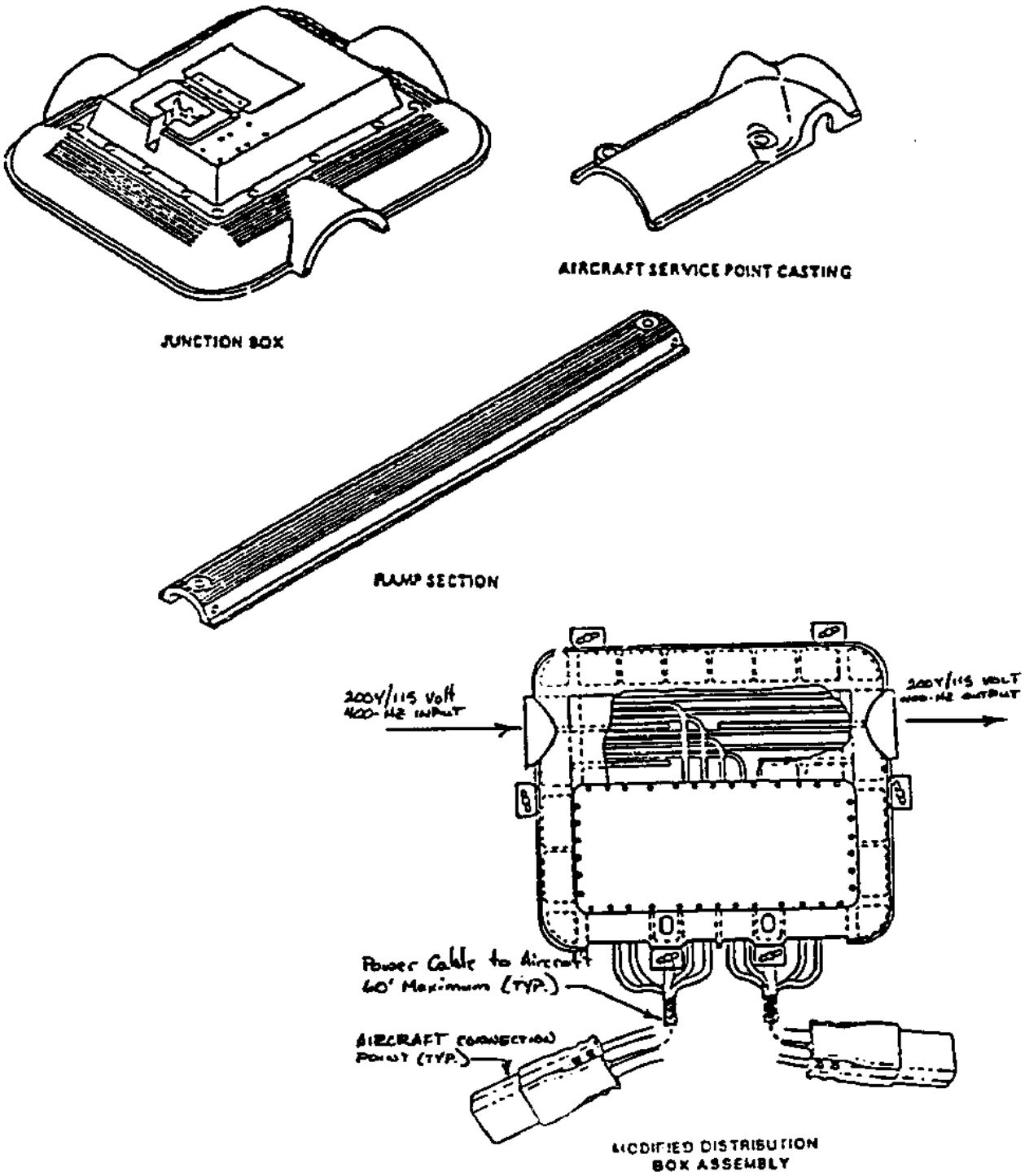

Figure 1c
Major Components of FLEDS

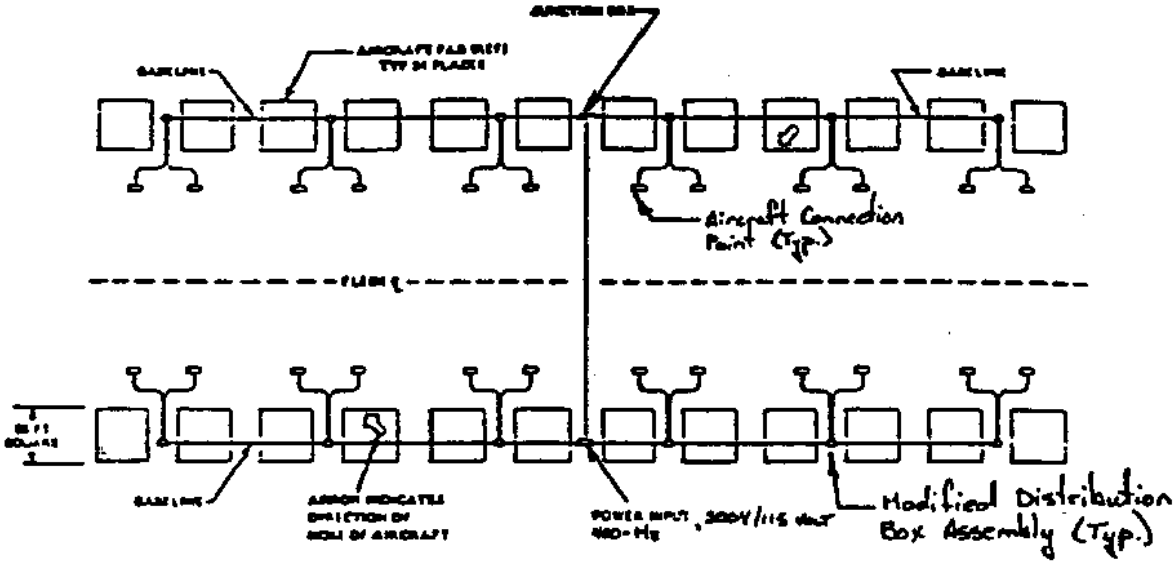

EXAMPLE 1

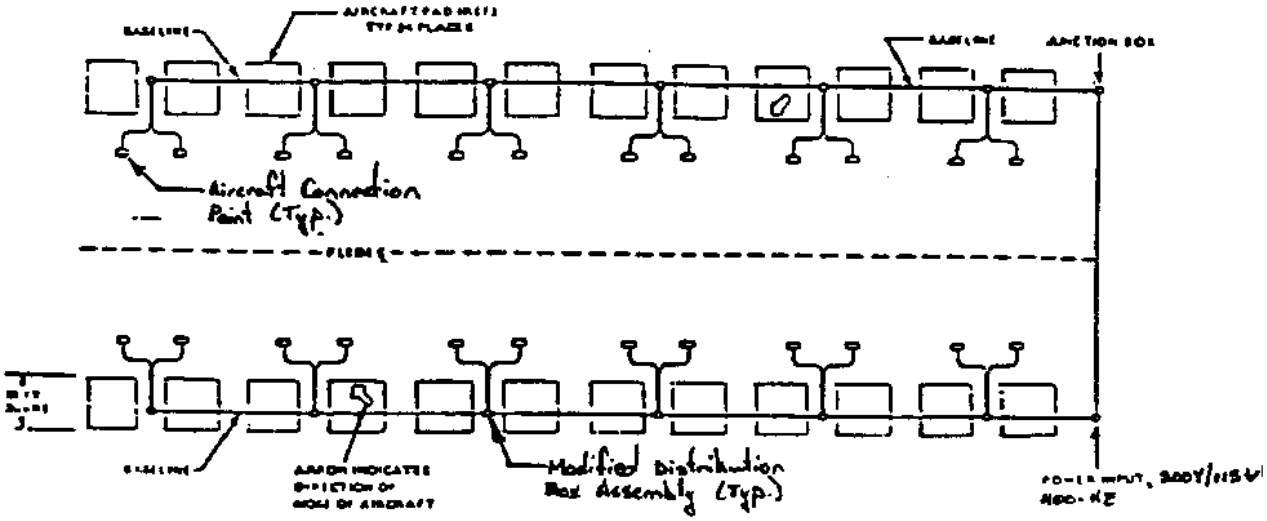

EXAMPLE 2
Figure 1d
Examples of a Typical FLED System

Table 1
400-Hz Aircraft Loads

Aircraft Load Type	Maximum kVA
A-4E	2.7
A-6E	12.2
E-2C	86.2 **
E-6A	400 *
F-4J	23.5
F-14A	17.3
F-18	18.5
P-3C	70.8
S-3A	33.9
EA-6B	17
HH-3D	16.5
SH-60B	15.5
SH-60F	15.5
EGC-130	42.3
C/MH-53E	16

* four service cables required
** two service cables required

Table 2
System Demand Factors

Number of Aircraft	Demand Factor Percent
1	100
2	90
3	83
4	77
5	71
6	66
7 to 9	61
10 to 12	50
13 to 15	45
16 to 21	40
22 to 40	31
41 to 60	28
Over 60	25

2.5.2 Avionics. In addition to aircraft, other loads such as repair shops for electronic equipment, require 400-Hz electric power for maintenance and testing. Load requirement shall be provided by the using agency in such cases.

2.5.3 Other Facilities. Research, development, training,and other types of facilities may require 400-Hz distribution systems. If the using agency cannot provide load requirements, compute such loads on a watts per square foot (square meter) basis when firm loads are not available (see MIL-HDBK-1004/1, Electrical Engineering, Preliminary Design Considerations).

2.5.4 Special Requirements. Facilities indicated in paragraphs 2.5.2 and 2.5.3 have more stringent 600-Hz power requirements than the Fixed Point Utility System (FPUS) provides. Prior to supplying these facilities from FPUS, verify that equipment installed will not be damaged by FPUS power tolerances. Use local converters for these systems.

2.6 Consideration of System Voltage Parameters. The inductive contribution to the reactance voltage drop of 400-Hz systems is roughly seven times greater than that of 60-Hz systems, which necessitates certain modifications to conventional distribution and utilization system design to compensate for the increased voltage drop. Specifications for limiting voltage drop are covered in later sections, but the following requirements apply generally to 400-Hz systems.

2.6.1 Development of Guidelines for Parameters. Voltage drop is always a concern in the design of 60-Hz systems. Give even closer attention to voltage parameters in the design of 400-Hz systems because the voltage drop is much larger. When designing 400 Hz systems, take into account the effects of varying cable lengths and connected loads.

2.6.2 Items Affecting Design. The designer must consider maximum loads and applicable cable-length limitations. Based on acceptable end-voltage requirements, determine maximum allowable cable and equipment impedances. Methods to be used for compensation or elimination of impedance are important also. Overcompensation of voltage drop can be as bad as under compensation. The voltage range which provides satisfactory aircraft power is the key element to an acceptable 400-Hz distribution system.

2.6.2.1 Acceptable End-Voltage Requirements. The voltage range of 108 volts minimum to 118 volts maximum specified in MIL-STD-704, Aircraft Electric Power Characteristics, is the operating voltage range of the equipment inside the aircraft. This operating voltage range takes into account a 0- to 5-volt drop in the electrical distribution system inside the aircraft. Accordingly, the full-load and no-load voltage at the interface (aircraft connection input point) should never drop below 113 volts nor rise higher than 118 volts. These parameters also apply to the input to the FLEDS system.

2.6.2.2 Equipment and Cable Parameters. Rotary equipment and cable parameters for use by the designer are given in Tables 3, 4, and 5. Some parameters directly affect voltage drop; other parameters are provided for information only. Equipment and cable descriptions correspond to those shown on Figure 1. These values are used to determine the maximum cable lengths (e. g., medium voltage feeders and low-voltage service circuits and aircraft cable connections), plus the permissible number of unit loads per feeder cable. Equipment providing lower voltage-drop parameters is acceptable.

2.6.2.3 Unit Loads. The unit-load basis used herein for voltage-drop calculations is individual 100-ampere, 0.8-power-factor loads. Two 100-ampere unit loads can be supplied by a 75-kVA utilization service center.

2.6.3 Maximum Cable Length and Loads. To determine maximum cable length and loads and the effects of other system parameters, various conditions were analyzed. The analysis is included in Appendix A. Table 6 shows the maximum number of unit loads that can be connected to a medium-voltage feeder and meet minimum voltage levels at the utilization service assembly.

2.6.3.1 Allowable Medium-Voltage Distribution Level. Provide the medium-voltage distribution level of 4,160 volts. Commercial airports are using 400-Hz systems with voltages up to 2,400 volts. However, in these cases the feeder lengths (or distances) are much shorter than the feeder lengths on the systems used by the naval and Marine Corps Stations. The 2,400-volt system provides no appreciable cost savings although it requires a reduction of the maximum feeder length to one-third of that acceptable on a 4,160-volt system which serves the same load. If feeder lengths are not reduced, then the 2,400-volt system is capable of serving only one-third of the load that can be fed by a 4,160-volt system.

2.6.3.2 Maximum Cable Lengths. Normally, do not exceed cable length values given in Table 7 for medium-voltage cables and in Table 8 for low-voltage cables. The reason that only four unit loads were permitted in Table 7 is that the effects of the low-voltage cables were considered. This was not the case in Table 6. The use of four loads maximum means that the steady-state load plus the step-load can never exceed 400 amperes as shown in the step-load capability columns.

2.6.3.3 Exceeding Limiting Cable Lengths. Justify exceeding the normal cable length limits only as follows:

a) When the limitation requires another central plant, the 15,000-foot feeder cable length may be increased by 10 percent. Increases over 5 percent must be approved by the Naval Facilities Engineering Command (NAVFACENGCOM).

b) Due to special site conditions, the aircraft cable length at such sites may be increased to 70 feet in length, only if approved by NAVFACENGCOM.

2.6.3.4 Rationale of Maximum Cable Lengths. The essential factor in determining acceptable cable lengths is the 113-volt limitation at the aircraft interface point. Meet this limitation in the following manner:

a) Permit a steady-state voltage droop to 3,918 volts on the 4,160-volt end of the medium-voltage distribution system. Droop is defined as the absolute change in voltage between the steady-state no-load condition and the steady-state full-load condition. This equates to 113 volts on the low-voltage distribution system or 0.942 per unit volts (using base voltages of 4,160 volts and 120 volts) at the terminals of the utilization service assembly.

b) Make up for the low-voltage system droop by compensating for the low-voltage system's reactance.

Table 3
Frequency Conversion Assembly Parameters

1. Synchronous Units with Revolving Fields	Motor	Generator
Power Factor	1.0	0.8
Voltage	460 volts	575 volts
Frequency	60 hertz	400 hertz
Full load		
Synchronous Unit Current	420 amperes	314 amperes
Field current	8.86 amperes	26.7 amperes
Current to bridge air gap	3.9 amperes	17.01 amperes
No Load		
Field current	3.8 amperes	14.435 amperes
Current to bridge air gap	3.6 amperes	14.03 amperes
Number of poles	6	40
Full load rating	400 horsepower	312 kVA
Synchronous speed	1,200 rpm	1,200 rpm

2. Transformer	
Rating	312 kVA
Voltage	575 to 4,160 volts
Resistance	1 percent
Reactance	5 percent
Current base	313.3 to 43.3 amperes

Table 4
Utilization Service Assembly Parameters

1. Transformer	
Rating	75 kVA
Voltage	4,160 to 208Y/120 volts
Resistance	1 percent
Reactance	5.9 percent
Current base	10.4 to 208 amperes

2. Line Drop Compensator			
Rating	90 kVA	Rating	75 kVA
Voltage	208Y/120 volts	Voltage	208Y/120 volts
Compensation		Compensation	
5 percent	-j.024 ohms	6 percent	-j.034 ohms
6 percent	-j.029 ohms	8 percent	-j.046 ohms
7 percent	-j.034 ohms	10 percent	-j.058 ohms
8 percent	-j.039 ohms	12 percent	-j.069 ohms
9 percent	-j.042 ohms	14 percent	-j.081 ohms
12 percent	-j.058 ohms	16 percent	-j.092 ohms
14 percent	-j.067 ohms		
16 percent	-j.077 ohms		
18 percent	-j.086 ohms		
20 percent	-j.096 ohms		

3. Passive-Element Filter	
Resistance	0.6 ohms
Reactance	2.3 millihenries
Capacitance	68 microfarads

Table 5
Cable Parameters

1. Medium-Voltage Feeder Cable	
Size	No. 2 AWG
Conductors	one 3-conductor
Voltage rating	5 kV at a 100 percent insulation level
Insulation Type	EPR or XLP
Cable assembly impedance values per 1,000 feet:	
Resistance	0.098 ohms
Inductance	101 microhenries
Capacitance	0.1142 microfarads
2. Low-Voltage Service Cable	
Size	4/0 AWG
Conductors	one 3-conductor
Voltage rating	600 volts
Insulation Type	XHHW
Cable assembly impedance values per 1,000 feet:	
Resistance	0.085 ohms
Inductance	70.8 microhenries
Capacitance	0.0962 microfarads

Table 6
Maximum Unit Loads on Feeders (1)

Cable Length Feet	Bus 3 Per-Unit Volts (2)	Number of Unit Loads	No-Load Volts 1-n	
15,000	0.9917	One	119	
	0.9834	Two	118	
	0.9751	Three	117	
	0.9668	Four	116	
	0.9585	Five	115	
	0.9502	Six	114	
	0.942	Seven	113	(3)
10,000	0.9945	One	119.3	
	0.9890	Two	118.7	
	0.9835	Three	118.0	
	0.9780	Four	117.4	
	0.9725	Five	116.7	
	0.9670	Six	116.0	
	0.9610	Seven	115.3	

Table 6 (Continued)
Maximum Unit Loads on Feeders (1)

Cable Length Feet	Bus 3 Per-Unit Volts (2)	Number of Unit Loads	No-Load Volts 1-n
	0.9560	Eight	114.7
	0.9505	Nine	114.0
	0.9450	Ten	113.4
5,000	0.9973	One	119.6
	0.9919	Three	119.0
	0.9865	Five	118.4
	0.9811	Seven	117.7
	0.9757	Nine	117.1
	0.9703	Eleven	116.4

(1) Voltage regulated on the high-voltage side (4,160 volts) of the frequency conversion transformer assembly.
(2) The utilization service center transformer per-unit base is 208/120 volts. See Appendix A for detailed analysis of the system.
(3) The underlined rows denote the maximum number of unit load wherein voltage does not drop below 113 volts.

Table 7
Maximum 400-Hertz Medium-Voltage Cable/Lengths and Loads

Feeder Cable Length Feet	Individual 100-Ampere, 0.8-Power-Factor, Steady State Unit Loads	Step Load Capability at 0.8 Power Factor	
		Steady State Load Amperes	Step Load Addition Amperes
		0	400
		100	300
15,000	4	200	200
		300	100
		400	0

Table 8
Maximum 400-Hertz Low-Voltage Cable Lengths (1)

Service Cable Length Feet	Aircraft Cable Length Feet
250	60

(1) Based on a 100-ampere, 0.8-power-factor unit load.

Section 3: DESIGN REQUIREMENTS

3.1 Design Procedures. Preliminary design procedures for 400-Hz systems are the same as those for 60-Hz systems (loads, distances, etc.) so that the system design will meet project requirements.

3.1.1 Data Gathering. Determine the following data regardless of whether an entirely new installation is being designed or an existing facility is being changed or upgraded. While a new facility allows more leeway in the design approach, the available load data ordinarily will not be as precise. Gather or design concurrently with the 400-Hz system the following data:

a) Facility electrical site plans with locations of all aircraft service points.

b) Facility electrical building plans having 400-Hz loads or used to house 400-Hz equipment.

c) Determination of all 400-Hz load specifications including both requirements for new loads and replacement or reuse of any existing 400-Hz low-voltage conversion distribution system.

d) Data on the proposed or installed 60-Hz primary distribution system.

3.1.2 System Layout. From the above data, develop a system layout which locates possible distribution line choices and pinpoints load connection points.

3.1.3 Equipment Layout. After the development of the system layout, make equipment locations based on the design aspects delineated in the following paragraphs.

3.1.4 Design Aspects. The 400-Hz system consists of the following major elements:

a) The central power plant.

b) The medium-voltage distribution system.

c) The low-voltage utilization system.

The following considerations apply to the entire 400-Hz system design.

3.1.4.1 Protective Device Operation. Always consider the thermal and magnetic characteristics for 400-Hz circuit protective devices. Operation at 400 Hz causes more heat rise in current-carrying parts than does operation at

60 Hz. There is also decreased electromagnetic pull on magnetic-trip elements. Because all current ratings of devices are affected to different degrees, consider applicable derating factors during design phase.

Check with the appropriate manufacturers to determine ratings appropriate to the equipment. Also, specially calibrate thermal and magnetic characteristics of protective devices for use on 400-Hz systems.

3.1.4.2 Surge Arresters. Provide Surge arresters for 60-Hz system protection where necessary (see MIL-HDBK-1004/2, Power Distribution Systems). In general, the only exposed lines will be those of the 60-Hz distribution system. Therefore, provide 400-Hz protection only for devices whose insulation capability is below that provided by the 60-Hz surge protection, which will normally protect the medium-voltage 400-Hz devices. Varistors available for use with the low-voltage 400-Hz system can limit surges to about 1.7 times the peak voltage; provide where required. The using agency will furnish details of any equipment requiring other than varistor protection. For 400-Hz electronic equipment sensitive to voltage spikes as low as 1.5 times the nominal voltage, zener-type suppressors (silicon-avalanche diodes) can limit the voltage to 1.38 per unit. Provide these zener-type suppressors normally on the equipment terminals.

3.1.4.3 Bus and Cable Material. Because of its lower resistance, use copper, except where such use is clearly impracticable. Fully justify the use of anything other than copper in the design analysis (see Section 4).

3.1.4.4 Conduit. The presence of magnetic materials in the vicinity of electric conductors increases the flux density thereby increasing resistance and inductance. Therefore, use nonmagnetic materials, such as aluminum or plastic, for all raceways. Use nonmagnetic materials, such as aluminum, bronze, or plastic, as appropriate, for cable terminations, cable clamps, and other equipment.

3.2 Medium-Voltage Distribution System Design. Because the 15,000-foot maximum feeder length dictates the number and location of acceptable central plant sites, make the layout of the medium-voltage feeder lines first.

3.2.1 Type of Distribution. Generally, use raceway systems for distribution of 400-Hz circuits. Bare, aerial 400-Hz systems are precluded because of the excessive inductance of such circuits. Overhead distribution systems using preassembled, messenger-supported, insulated cable are acceptable in areas where lightning storms are few and where aircraft clearance criteria do not apply. In areas where protection against lightning-induced surges is required, use surge arresters specifically designed for use at 400 Hz for protection of underground-to-aerial risers. The use of 60-Hz arresters is ineffective and hazardous because of the capacitive elements of arresters. The change in frequency changes the capacitance and, therefore, disturbs the even-voltage gradients which prevent premature sparkover.

3.2.2 Practicable Distribution Area. Considering the 15,000-foot limit on the length of a medium-voltage feeder and the impracticality of straight-path feeder installations, the central plant service area is likely to be limited to a 2.5-mile radius. Therefore, site configurations permitting one central plant should serve an area up to 5 miles in diameter (see Figure 2).

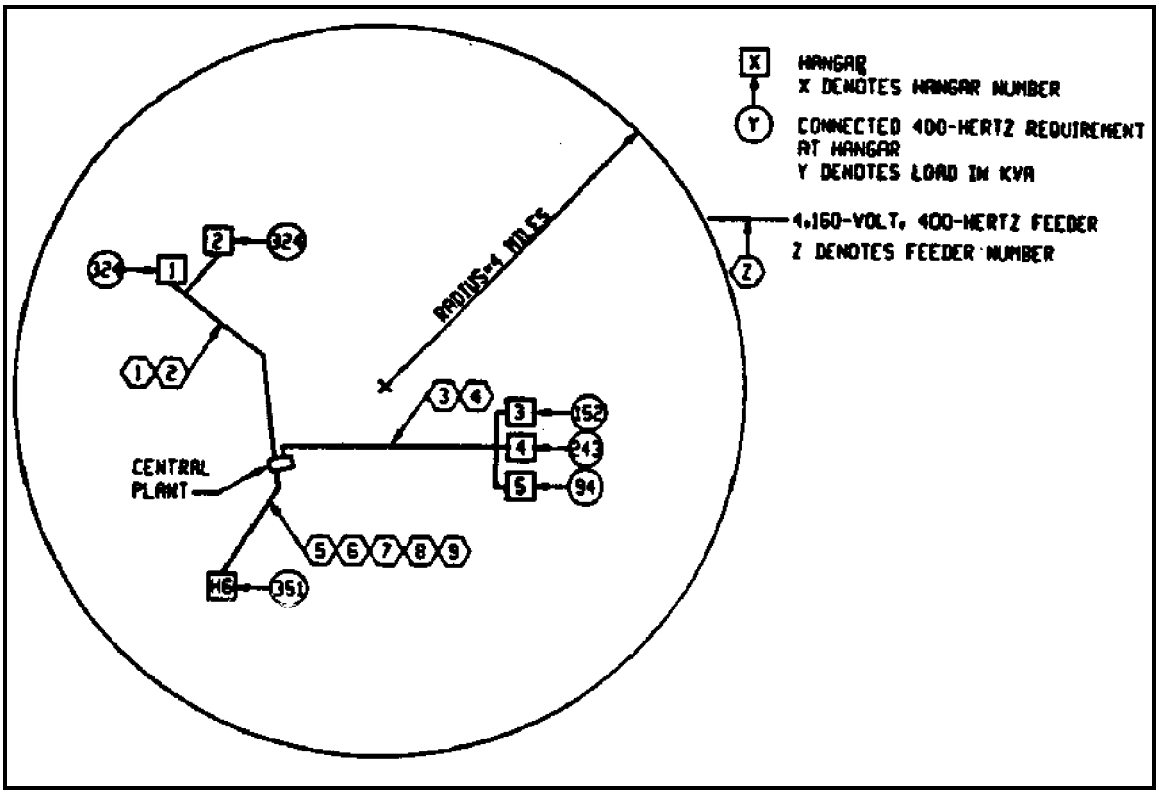

Figure 2
Example of Central Plant/Hangar Site Plan

3.2.3 Shunt Reactor Capacity. Install shunt reactors on each medium-voltage feeder to balance the capacitance of that feeder. Size the reactor so that the no-load power factor of each medium-voltage feeder, and thus the system, is close to unity. The nominal kilovoltampere reactive (kvar) rating of each reactor must be greater than its feeder cable's capacitive kvar to provide a lagging power factor, but it should not be more than 10 kvar as seen by the overall system. Indicate nominal ratings based on the maximum allowable specified capacitance of each medium-voltage feeder. Install shunt reactors on each medium-voltage feeder as indicated on Figure 1.

3.2.3.1 Field Adjustment. Adjust the nominal indicated rating of the shunt reactor to suit the actual capacitance of the cable provided. Make field measurement of the actual capacitance after the cable is installed, and the correct shunt reactor tap can be chosen to the closest unity power factor setting.

3.2.3.2 Nominal Rating Sizing. An example of nominal shunt reactor sizing follows. If the nominal rating calculated is less than 10 kvar for a feeder, the shunt reactor may not be necessary to decrease voltage drop. However, its installation provides for capacitive discharge which increases operator safety.

System voltage (V.S-) = 4,160 volts
Feeder Length = 1 mile
Maximum capacitance allowed = 0.603 microfarads per mile
Capacitive reactance (X.C-) = -j660 ohms at 400 hertz

$$\text{Nominal rating} = \frac{\text{V.S- squared}}{\text{1,000X.C-}} = \frac{\text{(4,160) squared}}{\text{1,000 (660)}} = 26.2$$

Required nominal rating = 26.2 kvars

3.3 Central Plant Design. A central plant is the point where the station's medium-voltage distribution system 60-Hz (in rare cases 50-Hz) input is converted to 400-Hz power for distribution by a 400-Hz feeder distribution center to the station's medium-voltage distribution system. A typical 400-Hz central plant is shown on Figure 3. Normally, the plant will be an unmanned facility.

3.3.1 Reliability. The continuous operation of the central 400-Hz medium-voltage system is extremely critical. Standby components are required at the central plant to ensure no major loss of 400-Hz electric power.

3.3.2 System 60-Hertz Input Power. The design of the 60-Hz input system is covered in this handbook only to the extent of providing necessary 400-Hz system reliability. For this reliability, two primary inputs from different feeders or electric sources of 60-Hz electric power are required at the central plant.

3.3.2.1 Primary Feeder Source. Generally, provide a prime and an alternate feeder from the installation's 60-Hz primary (medium-voltage) distribution system. An area having a 400-Hz load large enough to require a central medium-voltage system is an area with a load density which is both large and sufficiently important enough to require more than one 60-Hz primary distribution feeder.

3.3.2.2 Diesel-Engine Generator Source. Provide an emergency diesel-engine generator system (see MIL-HDBK-1004/4, Electrical Utilization Systems) as the alternative source where provision for an alternative feeder is more costly

than a standby power system. Provide diesel-engine generator capacity of at least 80 percent of the frequency conversion plant's firm capacity. Frequency conversion plant firm capacity is the sum of the rated capacities of all frequency conversion assemblies, with the largest unit not operating. Where required by the activity, provide 100-percent diesel-engine generator capacity. Provide diesel-engine generator sets with both manual and automatic transfer modes which start automatically on loss of normal power. Where more than one diesel-engine generator set is provided, provide units capable of being automatically paralleled. Provide switches to permit testing of diesel-engine generators without assuming load. The most economical diesel-engine generator voltage is generally the input voltage to the frequency conversion assembly.

3.3.2.3 Transformer. Because the frequency conversion assemblies are low-voltage input devices, transformers are necessary to stepdown primary power. No facility should depend on only one transformer, since this can result in a complete shutdown of the 400-Hz system. Require duality of transformers. Each transformer's rating shall be not less than 80 percent of the frequency conversion plant's firm capacity. When transformers of the outdoor substation type (see MIL-HDBK-1004/2) are installed adjacent to the central plant as shown on Figure 3, they can be used to supply the central plant's 60-Hz low-voltage switchboard (see MIL-HDBK-1004/3, Switchgear and Relaying) as shown on Figure 4.

3.3.3 System 400-Hertz Conversion Capacity. Firm power is power which is available even under emergency conditions. Determine the firm frequency conversion capacity of the central plant by the loads served and a 15- to 20-percent additional capacity for future loads. Provide one extra unit for standby (i.e., emergency use). If the requirement for the standby unit and for future capacity necessitates more units than for the present load with maintenance backup, incremental construction may be desirable. Such planning is acceptable as long as future space and capacity provisions for ancillary devices are covered fully in the first-design stage.

3.3.4 Frequency Conversion Assemblies. Ratings as shown in Table 3 provide satisfactory operation. When frequency conversion assembly performance is combined with a properly designed distribution and utilization system, it provides 400-Hz power to aircraft loads. This meets the requirements of MIL-STD-704. Figure 5 shows a typical frequency conversion assembly.

3.3.4.1 Motor Generator Units. Use standard units manufactured to support both military and commercial airports.

a) Output voltage. The most preferable output voltage is that of the distribution system or 4,160 volts; however, this equipment is not yet commercially available. Normally, specify a 575-volt motor generator output,

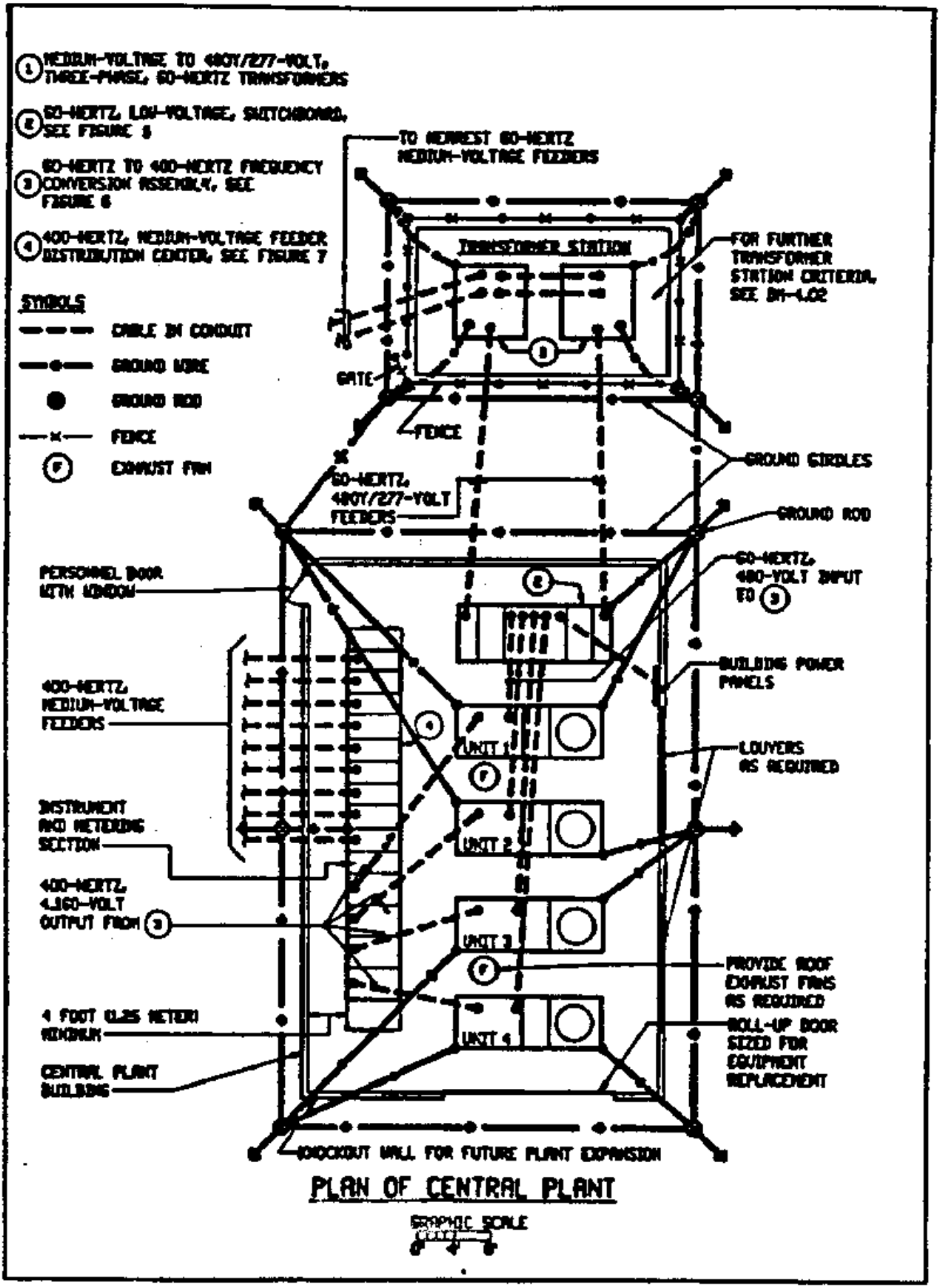

Figure 3
Typical 400-Hz Central Plant

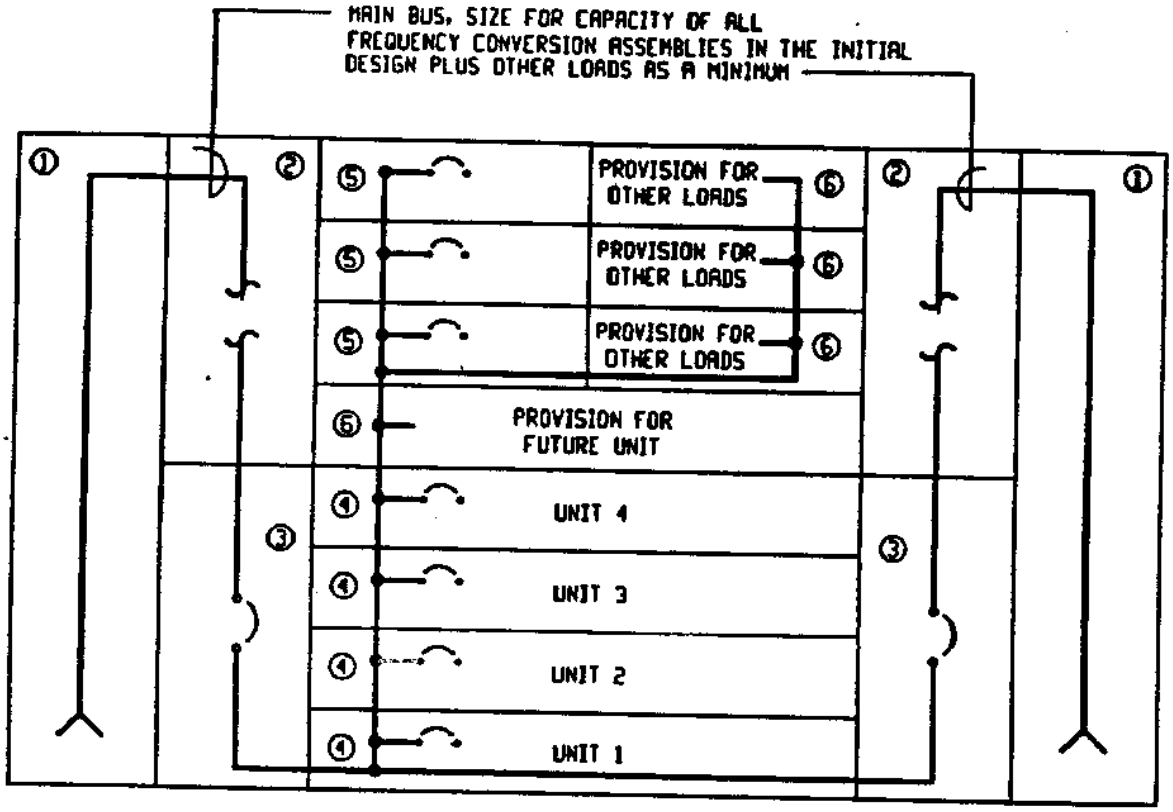

① INCOMING ENTRY SECTION

② INSTRUMENT SECTION WITH INSTRUMENT TRANSFORMERS, VOLTMETER AND SWITCH, AMMETER AND SWITCH, AND WATTHOUR-DEMAND METER

③ MAIN CIRCUIT BREAKER SECTION[1]

④ OUTGOING CIRCUIT BREAKER SECTIONS FOR FREQUENCY CONVERSION ASSEMBLIES

⑤ OUTGOING CIRCUIT BREAKER SECTIONS FOR OTHER LOADS 1

⑥ SPACE FOR FUTURE CIRCUIT BREAKERS

[1] PROVIDE CIRCUIT BREAKERS WITH CURRENT-LIMITING FUSES WHERE REQUIRED

Figure 4
Single Line Diagram of a 60-Hz Low-Voltage Switchboard

except when the system can reuse existing motor-generator sets that meet, or can be adapted to meet, criteria. In such cases use new motor-generator sets which match the output voltage of the existing sets.

b) Unit capacity. Normally, provide 312-kVA generators (the largest capacity now being produced as a standard by more than one manufacturer), since this size is usually the most economical and has the maximum full load efficiency (see Table 9). Use other unit capacities when adequately justified.

c) Vertical shaft construction. Vertical-shaft construction minimizes floor space requirements. A 312-kVA vertical motor-generator set, weighing as much as 6 tons (5500 kilograms), is approximately 4 feet (1.2 meters) square by 6.5 feet (1.98 meters) high. The same size horizontal unit can require a 6-foot (1.8 meters) by 7-foot (2.1 meters) floor space and can be almost as high. These areas and loads do not include the rest of the assembly requirements. Provide a clear space of at least 3 feet (0.9 meter) above the motor generator to allow for maintenance of the vertical unit.

Table 9
Typical Full-Load Efficiencies

Input Horsepower (1)	Output Efficiency kVA	kW	Percent
400	312	250	88
300	250	200	87
250	219	175	86
250	187	150	85
200	156	125	83
150	125	100	80
100	93.8	75	78
100	75	60	76
75	62.5	50	75

(1) Nearest standard size. Actual input horsepower may vary, depending upon the individual manufacturer.

3.3.4.2 Other Components. Figure 5 shows the other components that are provided as a part of a packaged frequency conversion unit. This ensures that units are factory designed to meet performance requirements.

a) Voltage step-up. Match the kVA of the low-to-medium-voltage step-up transformer specifically to the generator capacity. Provide voltage sensing devices on the transformer output to regulate the voltage of the motor-generator set. This regulation ensures that the voltage level at the medium-voltage bus of the 400-Hz feeder distribution center remains constant under any steady-state load condition.

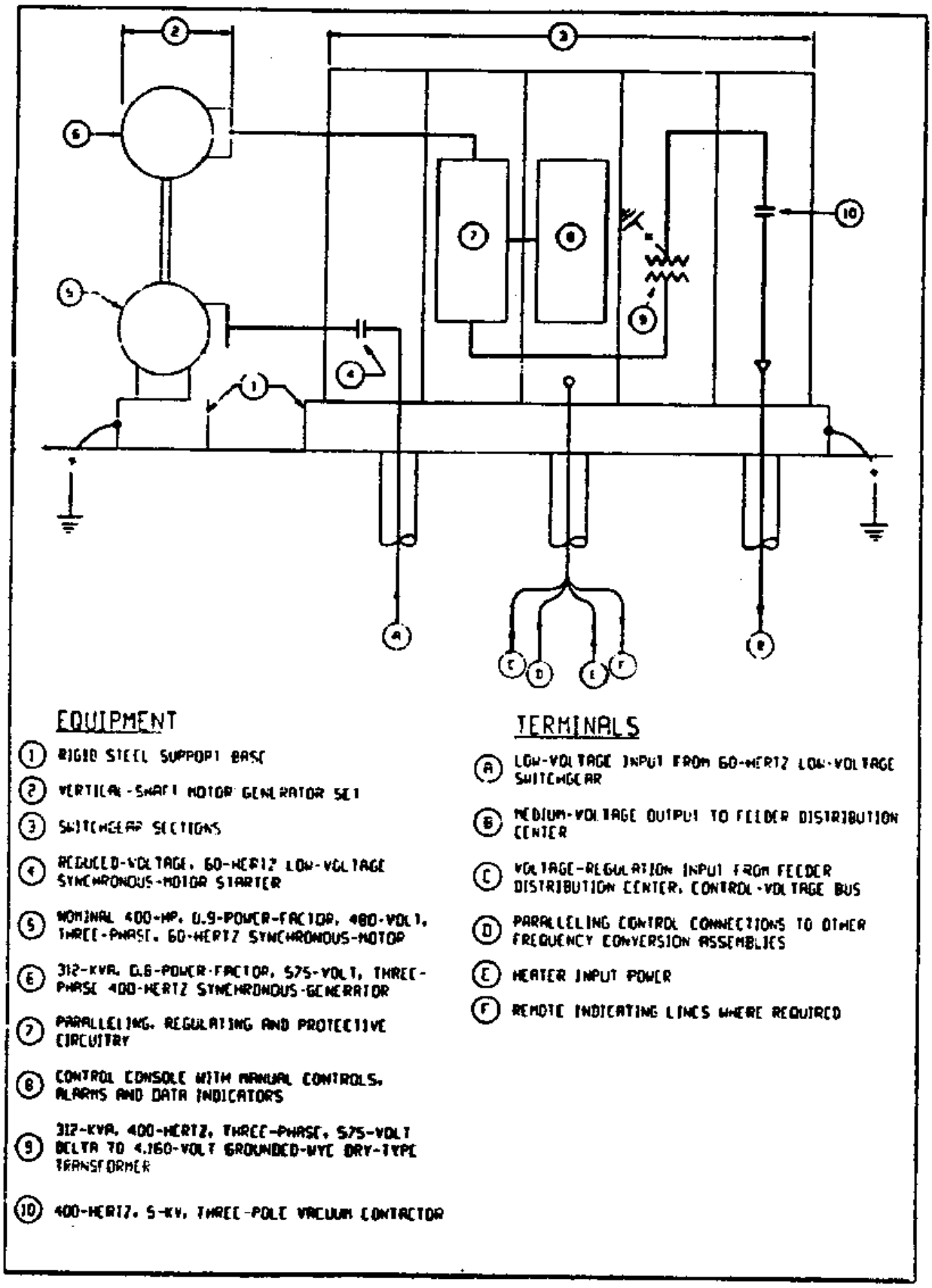

Figure 5
Single Line Diagram of a Frequency Conversion Assembly

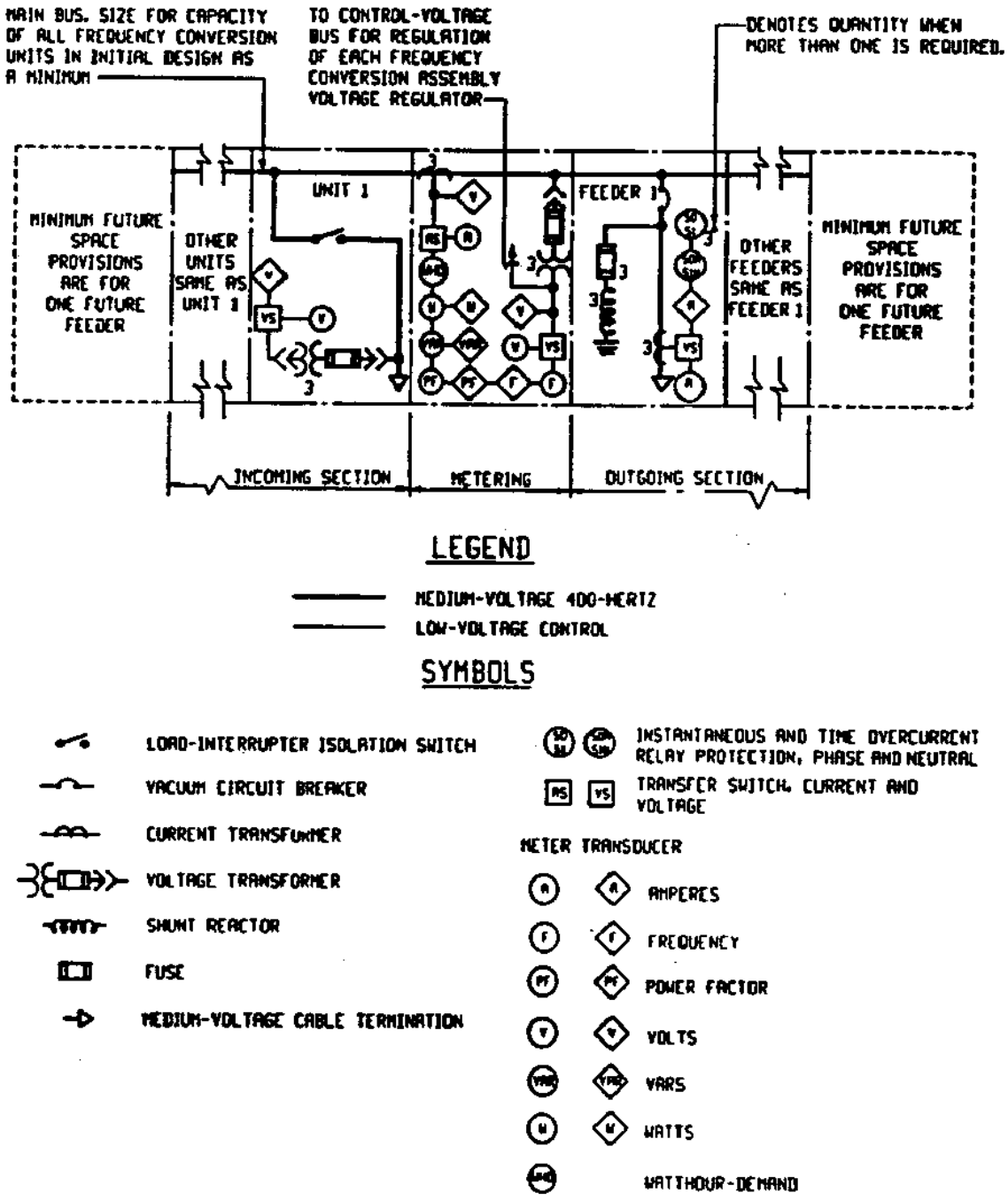

Figure 6
Single Line Diagram of a Feeder Distribution Center

b) Output disconnect. Use a vacuum contactor to disconnect the output of the unit rather than a circuit breaker, because the contactor is both smaller and less costly. In addition to overload and short-circuit protection, a contactor can provide overvoltage, undervoltage, underfrequency, and reverse-power control features, which are not available from a fused switch.

3.3.5 Feeder Distribution Center. The feeder distribution center serves as the 400-Hz medium-voltage system control point. Feed the output of all the frequency conversion assemblies into a common bus which supplies all the 400-Hz medium-voltage feeders. It serves as a point to measure 400-Hz usage and to correct the system's no-load power factor to almost unity by balancing the capacitance of each feeder cable. Figure 6 shows a typical feeder distribution center.

3.3.5.1 Metering. Normally, do not install recording type meters in an unmanned facility. If records are required, transmit them to a point where personnel are available to maintain orderly record keeping and storage.

3.3.5.2 Shunt Reactors. An example of shunt reactors sizing is shown in paragraph 3.2.3.2.

3.3.6 Central Plant Buildings and Other Equipment Shelters. The same reliability standards cited for equipment shall also apply to structures sheltering any part of the 400-Hz system or its environmental support systems. Provide spaces around equipment for ease and convenience of testing, maintenance, serving, and equipment removal. Provide a minimum 5-foot (1.5-meter) aisle space around each frequency conversion assembly. Larger aisles may be required to allow for replacement of defective equipment. Design buildings with knockout panels for future expansion. Control mechanical systems automatically by thermostats which maintain correct temperatures under all operating conditions. Provide roof exhaust fans as required. Provide louvers and air handling units for air supply which have filters which prevent entrance of dusty air into the operating parts of the motor-generator sets (see MIL-HDBK-1003/7, Steam Power Plants - Fossil Fueled). Include other considerations normally provided for diesel-engine generators and switchgear rooms.

3.4 Low-Voltage Utilization System Design. A low-voltage utilization system extends from the utilization service assembly as shown in Figure 1 or from the solid state frequency conversion assembly as shown in Figures 1a and 1b to the parked aircraft. The layout of aircraft parking defines the location of the parked aircraft units (see MIL-HDBK-1021/2, General Concepts for Pavement Design) which will define the locations and number of utilization service assemblies or solid state frequency conversion assemblies and determine if a single, low or medium-voltage feeder is capable of supplying only one hangar, several hangars, or aprons. Integrated design with the aircraft fixed point utility systems (see MIL-HDBK-1028/6, Aircraft Fixed Point Utility Systems).

3.4.1 Low-Voltage System Equipment. In addition to a utilization service assembly as used on a medium voltage system, each low-voltage system includes the individual aircraft's supply source or fixed service point unit.

3.4.1.1 Utilization Service Assemblies. To assure satisfactory operation, provide utilization service assemblies with components as shown on Figure 7.

a) Step-down transformers. Normally, provide step-down transformers rated 75 kVA and with a three-phase 208Y/120-volt output. The terminal rating of 208Y/120 volts is consistent with the usually higher voltage rating of distribution equipment over the typical 200Y/115 volts of utilization equipment. The higher distribution voltage level allows for voltage drop between the distribution and utilization points. The load served is generally no more than two, 100-ampere, 0.8-power-factor unit loads (34.5 kVA each). In special cases, larger load requirements (such as for TACAMO loads) may have to be served. In such cases, criteria shall be provided by the using agency to the designer. For TACAMO loads, utilize 400 kVA transformers with the same maximum percentage impedance values shown in Table 4 for 75-kVA units.

b) Line drop compensators. Set the medium-voltage feeder length to give a per-unit voltage droop (absolute change in voltage between steady state, no-load and steady state, full-load) to 0.942 at the end of the feeder cable or 113-volts line-to-neutral on a 120-volt utilization assembly terminal voltage base. Therefore, compensate the drop from the utilization service assembly to the aircraft connector so that no less than 113 volts are provided to the aircraft at the interface point. Provide line drop compensators as indicated in Table 4 for 75-kVA transformers and 460 to 480 kVA for 400-kVA transformers.

c) Passive-element filter assembly. Install Passive-element filter assemblies to reduce harmonics which can be generated in the system. Standard performance requirements are based on systems which do not provide additional harmonics from the presence of rectified direct-current loads. Provide passive-element filters on equipment terminals of an aircraft whose load produces harmonics.

3.4.1.2 Fixed Service Point Units. Generally, fixed service point units provide disconnecting devices for two aircraft; that is, they provide two circuit breakers. Provide power quality in accordance with the requirements of MIL-STD-704.

3.4.2 Low-Voltage Cable Limitations. The location of the parked aircraft and the 60-foot aircraft cable limits the location of fixed service point units. Each fixed service point unit requires a utilization service assembly or solid state frequency converter for its supply, with the location limited by the maximum 250-foot service cable length.

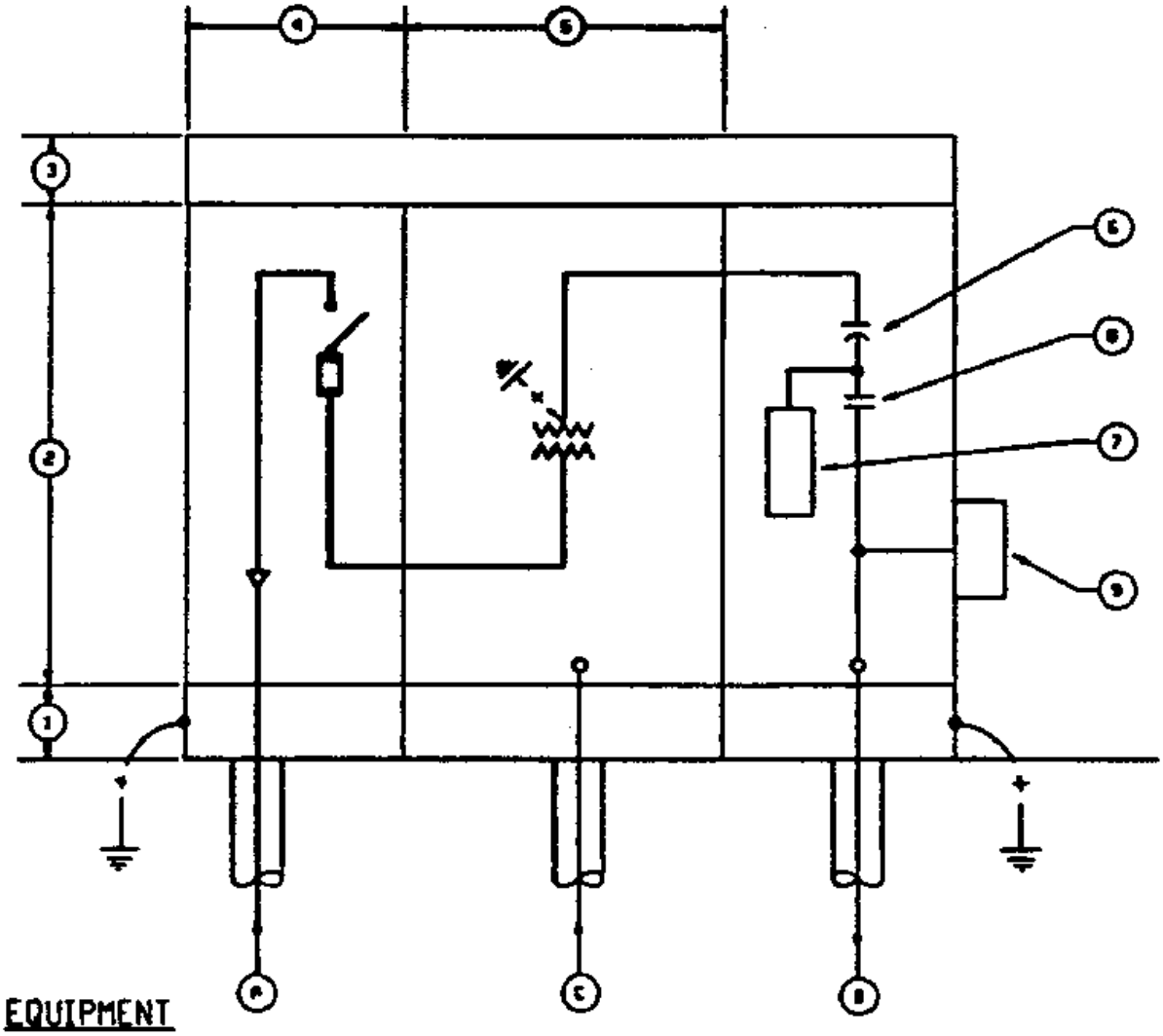

EQUIPMENT

1. COOLING-AIR INLET
2. SWITCHGEAR CONSTRUCTION
3. COOLING-AIR OUTLET
4. THREE-POLE, 400-HERTZ, 5-KV, FUSED LOAD-INTERRUPTER SWITCH
5. 75-KVA, 400-HERTZ, THREE-PHASE, 4160-VOLT-DELTA TO 208/120-VOLT-GROUNDED-WYE, DRY-TYPE TRANSFORMER
6. 90-KVA, 400-HERTZ, THREE-PHASE FOUR-WIRE LINE DROP COMPENSATOR WITH A 5-PERCENT TO 20-PERCENT COMPENSATION RANGE.
7. PASSIVE-ELEMENT FILTERS AS REQUIRED TO MAINTAIN NOT MORE THAN 5 PERCENT HARMONIC DISTORTION OF THE 400-HERTZ WAVE FORM
8. THREE-POLE, 400-HERTZ, 325-AMPERE LOW-VOLTAGE CONTACTOR
9. TEST RECEPTACLE

TERMINALS

A. MEDIUM-VOLTAGE INPUT FROM MEDIUM-VOLTAGE FEEDER
B. LOW-VOLTAGE OUTPUT TO FIXED SERVICE POINT UNIT
C. HEATER INPUT POWER

Figure 7
Single Line Diagram of a Utilization Service Assembly

For medium-voltage systems, the voltage level on the input to the utilization service assembly defines the setting for its line drop compensator. Indicate compensator settings on the drawings so correct aircraft voltage levels are provided. An example of a line drop compensator setting is given in Section 4. Overcompensation can cause the sending-end impedance to appear very low and result in a current flow that can raise the voltage level above the required 118 volts. Set the compensator so that the limits of 113 volts minimum at full-load and 118 volts maximum at no-load at the aircraft interface point is not compromised under any circumstance.

3.4.3 Feeder Cable Connection. Once the location of all utilization service assemblies is determined, calculate the allowable number of such devices which can be connected to a medium-voltage feeder cable. See Section 4 for an example of a calculation.

3.4.4 Cable Design Requirements. Cable for 400-Hz circuits requires a design which minimizes voltage drop by its construction. The cable parameters for feeder and service cable are given in Table 5. To provide standardized design, design aircraft cable to meet requirements in MIL-STD-90328, Cable Assembly External Electric Power. Aircraft 115/200-Volt, 400-Hz. Complete requirements for cable design are covered in NFGS-16305, 400-Hz Low-Voltage Substation.

Section 4: DESIGN ANALYSIS

4.1 General Requirements. Prior to final design, perform a design analysis in accordance with criteria stated in this handbook. The design analysis should also justify decisions that have been recommended in the concept or in feasibility studies. Necessary material and computations that are contained in the concept or studies are found in the body of the analysis or in the appendix.

4.2 Scope. The design analysis shall completely cover the electrical design requirements for 400-Hz electric power generation conversion and distribution systems for the project and shall consist of two parts: (1) a Basis for Design: and (2) Design Computations. In many cases, entire stations can be served from one 400-Hz central plant. Include calculations of the maximum length practicable for any component of the distribution system. In addition, determine if the 400-Hz central plant capacity or voltage-drop characteristics of the system, or both, indicate or warrant more than one 400-Hz central plant for that particular station.

4.3 Basis for Design. The basis for design serves as a concise outline of functional features, including a description of any existing systems and other considerations affecting the design. Provide a full description of all special requirements and justification for any proposed departure from standard criteria.

4.3.1 Type of System. Justify provision for a medium voltage and/or low-voltage distribution system based on calculations of demand requirements. A 400-Hz load calculation is shown on Table 10. Aircraft loads are from Table 1; the aircraft demand factor is from Table 2; and the other values are those customarily furnished by the using agency.

4.3.2 400-Hertz Conversion. Justify the size and number of frequency conversion assemblies proposed and the reasons for selection of that combination. Table 11 provides an example of how the number of frequency conversion assemblies were chosen.

4.3.3 60-Hertz Input Power. Cover the electrical characteristics of the input power supply for the 400-Hz system, including circuit interrupting requirements and voltage regulation.

4.3.3 1 Adequacy. Make a statement concerning the adequacy of the existing 60-Hz system at the point of take-off to supply 400-Hz electric power requirements. If the 60-Hz source is inadequate, include the measures proposed to correct the deficiency in the statement.

4.3.3.2 Transformer Stations. To maintain the high reliability required, provide two transformers. Determine the capacity of the proposed transformer stations proposed to supply 400-Hz central plants. Following is an example of a transformer station sizing.

Minimum Required Capacity (1) = (80 percent x 766 kVA) + 50 kVA 663 kVA
Nearest larger standard transformer size is 750 kVA
Therefore, provide two 750 kVA transformers.
If one transformer is shut down, 100 percent of the 633-kVA demand can still be supplied, while if 500-kVA units were supplied only 75 percent (less than the required 80 percent of demand) could be provided.

(1) Assuming an additional 50-kVA, 60-hertz demand.

Table 10
400-Hz Load Calculations

1. Aircraft Maximum Loads

Hangar No.	Aircraft Type	Aircraft Quantity	Aircraft Average Simultaneous Load	Hangar Loads
1	F-14A	24	13.5 kVA	324 kVA
2	F-14A	24	13.5 kVA	324 kVA
3	F-14A	12	13.5 kVA	152 kVA
4	F-14A	18	13.5 kVA	243 kVA
5	F-4J	4	23.5 kVA	94 kVA
6	E-2C	5	70.1 kVA	351 kVA
			Total Aircraft Loads	1,488 kVA

2. Avionic Connected Loads

Versatile Avionic Shop Tester Stations, 6 at 13.5 kVA	81 kVA
Shop Load from Using Agency	102 kVA
Connected Avionics Loads	183 kVA

3. Miscellaneous Connected Loads from Using Agency 404 kVA

4. Demand Loads

Type	Maximum or Connected Load	Demand Factor	Demand
Aircraft	1,488 kVA	0.25	372 kVA
Avionics	183 kVA	0.50	92 kVA
Miscellaneous	404 kVA	0.50	202 kVA
		Demand Load	666 kVA

5. Minimum 400-Hertz Central Plant Output Capacity Required

666 kVA x 1.15 percent = 766 kVA

Table 11
400-Hz Central Plant Sizing

1. To Supply Required Minimum 400-Hertz Output (Firm) Capacity of 766 kVA

Individual Motor Generator Output Rating	No. of Units	Total Output Provided
312 kVA	3	936 kVA
250 kVA	4	1,000 kVA
219 kVA	4	876 kVA
187 kVA	5	935 kVA

2. Number of Units Required to Supply 766-kVA Firm Capacity Plus Standby Capacity

Individual Output Rating Capacity	Required No. of Units	Total Plant
312 kVA	3 + 1	1,248 kVA
250 kVA	4 + 1	1,250 kVA
219 kVA	4 + 1	1,095 kVA
187 kVA	5 + 1	1,122 kVA

3. Plant Size Evaluations

	Rating (1)			
Evaluations	187-kVA Unit	219-kVA Unit	250-kVA Unit	312-kVA Unit
Capital Cost	Most (1)	Median (2)	Median (2)	Least (3)
Floor Space	Most (1)	Median (2)	Median (2)	Least (3)
Available Output	Median (2)	Least (1)	Most (3)	Median (2)
Flexibility	Best (3)	Median (2)	Median (2)	Least (1)
Complexity	Most (1)	Median (2)	Median (2)	Best (3)
Overall Rating	Lowest (8)	Lowest (9)	Median (11)	Best (12)

(1) Based on (1) to (3) points with 3 points being the best rating.

4. Plant Size Selection

Use four (4) 312-kVA units, as that plant size has the best overall rating.

4.3.3.3 Generator Source. When diesel-engine generation is necessary to provide an alternative source, give pertinent data in the Basis for Design. For diesel-engine generator selection, see MIL-HDBK-1003/11, Diesel-Electric Generating Plants.

a) Loading. Cover the percentage of the total calculated 400-Hz load which can be supplied by diesel-engine generators, and justification for that percentage. In addition, indicate the number of diesel-engine generators proposed, reasons for the selection, and size (kilowatt and power-factor rating) with the maximum revolutions per minute (rpm), maximum brake mean effective pressure (BMEP), and horsepower rating of the engines.

b) Engine class. Cover the type of starting system, type and grade of fuel, and approximate storage capacity. Justify the reasons for selection of other than fully automatic diesel-engine plants.

4.3.4 Distribution. Determine the number of utilization service assemblies which can be served by each medium-voltage feeder in a manner similar to the example shown on Table 12. Base the proposed number of medium-voltage feeders on meeting voltage-drop limitations. Figure 8 shows the single line and formulas used in making the voltage-drop calculations in Figure 9. The calculations were simplified by the use of a unity power factor. The complex calculations involved when using a 0.8 power factor will probably require the designer to access a computer power system analysis model. This system was used for the Appendix A study.

4.4 Design Computations. Provide computations to indicate that materials and systems are adequate, but not overdesigned, and are correctly coordinated.

4.4.1 Capacity and Other Calculations. Calculate loads, number of frequency conversion assemblies needed, transformer capacities, and each medium-voltage feeder's allowable utilization connections (see Tables 10, 11 and 12 and paragraph 4.3.3.2). Voltage-drop calculations are necessary (see Figures 8 and 9).

4.4.2 Short Circuits. In addition to calculating protective device current rating, determine short-circuit effects of 400-Hz electric power.

4.4.2.1 400-Hertz Systems. 400-Hz systems generate relatively low-fault currents, primarily because of the inherent impedance of the motor-generator set portion of the frequency conversion assembly. The peak let-through current of a motor-generator set always occurs on the first full half-cycle. Thereafter, the current decreases exponentially to a steady state value which tends to be approximately 60 percent of the first full half-cycle peak current. This is a function of the 400-Hz motor-generator set design and, particularly, the design of the generator damper cage.

4.4.2.2 Analysis. For simplicity in conducting short-circuit analysis, the impedance of each motor-generator set can be assumed to offer a maximum available short-circuit contribution equal to 12 times that of the rated full-load capacity of each set. A short-circuit analysis of a 400-Hz distribution system is shown on Figure 10.

Table 12
Determination of Acceptable Utilization Connections

1. Medium-Voltage Feeder Cable Limitations

Feeder Length = 15,000 feet
Feeder Capacity = Four unit loads, each 100-ampere, 200Y/115 volt, 0.8 power factor
= 4 x 34.5 kVA = 138 kVA

2. Required Service to Hangars (Table 10)

Hangar	Aircraft	Loads: Connected(1)	Loads: Demand Factor(2)	Loads: Demand
1	24	324 kVA	0.31	100 kVA
2	24	324 kVA	0.31	100 kVA
3	12	152 kVA	0.50	76 kVA
4	18	243 kVA	0.40	97 kVA
5	4	94 kVA	0.77	72 kVA
6	5	351 kVA	0.71	249 kVA

3. Acceptable Medium-Voltage Feeder to Utilization Connections

Feeder	Serves	Demand Load Per Feeder	Percent Feeder Capacity Used (4)
1	Hangar 1	100 kVA	73
2	Hangar 2	100 kVA	73
3	Hangars 3 and 5	98 kVA (3)	71
4	Hangar 4	97 kVA	71
5,6,7,8 & 9	Hangar 6	76 kVA	51

(1) From Table 10.
(2) From Table 2.
(3) Demand for 16 aircraft
(4) Percent of 138-kVA feeder capacity or four unit loads

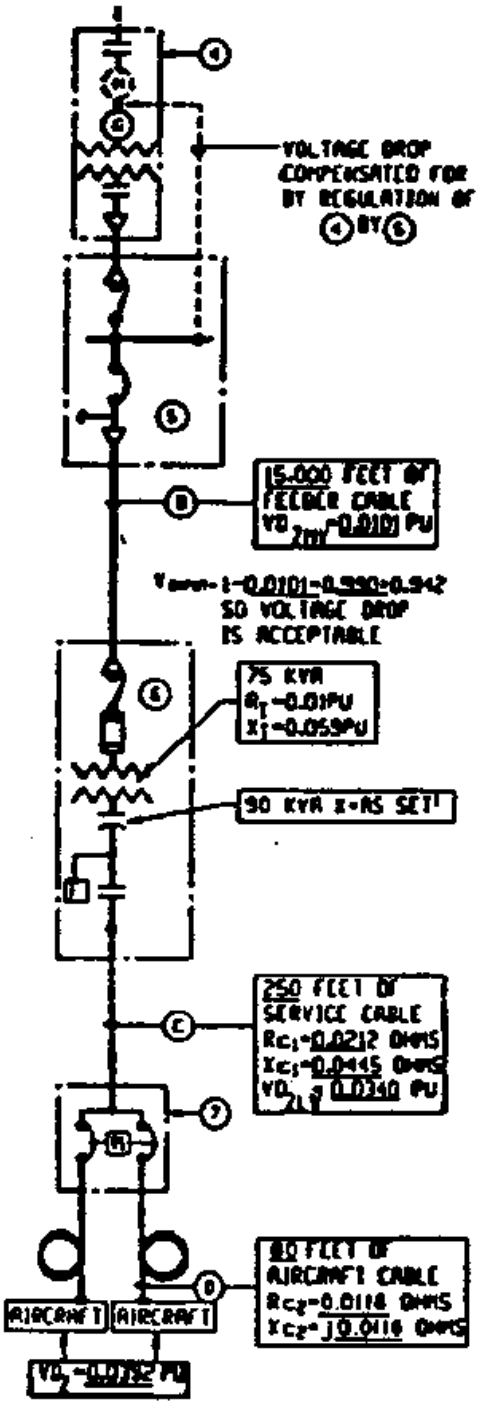

NOTE:
FOR EQUIPMENT AND CABLE DESCRIPTIONS SEE FIGURE 1

PER-UNIT BASE VALUES
KVA_B=75 KVA
V_B=120 VOLTS
I_B=208 AMPS
Z_B=0.577 OHMS

CABLE VALUES			
CABLE	SIZE	R	X
		OHMS/1,000 FEET	
FEEDER	2 AWG	0.196	j0.254
SERVICE	4/0 AWG	0.085	j0.178
AIRCRAFT	2 AWG	0.198	j0.197

NUMBER OF PER-UNIT LOADS		
CABLE	NUMBER	AMPERES AT APPROPRIATE VOLTAGE
FEEDER	1	1=100=440/208=5
SERVICE	1	1=100=100
AIRCRAFT	1	1=100=100

QUANTITIES
A=AMPERES
V=VOLTS
KVA=KILOVOLTAMPERES
R=RESISTANCE
X=REACTANCE
L=CABLE LENGTH IN 1,000 FEET.
Ω=OHMIC VALUE
PU=PER-UNIT VALUE
VD_R=RESISTANCE VOLTAGE DROP
VD_X=REACTANCE VOLTAGE DROP
VD_Z=TOTAL VOLTAGE DROP
R_{LD}=LINE DROP COMPENSATOR RESISTANCE
X_{LD}=LINE DROP COMPENSATOR REACTANCE

FORMULAS
(1) $VD_R = \sqrt{3}(A)(R)(L) / V_{SYSTEM}$
(2) $VD_X = \sqrt{3}(A)(X)(L) / V_{SYSTEM}$
(3) $VD_Z = (VD_R^2 + VD_X^2)^{1/2}$
(4) $R_{PU} = R_\Omega / Z_B$
(5) $X_{PU} = X_\Omega / Z_B$
(6) X_{PU} (ON CHOSEN BASE) $= (X \times KVA \times 1{,}000) / V_B^2$

*SET AT 20% X = j0.0356 = j0.197 PU = X_{LD} (6L WITH X 1 PERCENT OR 0.0063 PU = R_{LD}

Figure 8
Voltage-Drop Calculations Single Line and Formulas

1. FOR MEDIUM-VOLTAGE SYSTEM:

$VD_{RMV} = \sqrt{3}(\underline{5})(\underline{0.198})(\underline{15})/(4.160) = \underline{0.00618}$ PU(1)

(1) DENOTES FORMULA GIVEN ON FIGURE 13 (TYPICAL)

$VD_{XMV} = \sqrt{3}(\underline{5})(\underline{15})(\underline{0.254})/(4.160) = 0.00\underline{793}$ PU(2)

$VD_{ZMV} = 0.0101$ PU(3)

2. FOR LOW-VOLTAGE SYSTEM:

$R_{CABLE} = Rc_1 + Rc_2 = \underline{0.0212} + \underline{0.0118} = \underline{0.0331}/0.577 = \underline{0.0573}$ PU(4)

$R_{SYSTEM} = R_{CABLE} + R_T + R_{LD} = \underline{0.0573} + 0.01 + 0.0083 = \underline{0.0756}(0.577) = \underline{0.0436}$ OHMS(4)

$VD_{RLV} = \sqrt{3}(\underline{100})(\underline{0.0436})/208 = \underline{0.0363}$ PU(1)

$X_{CABLE} = Xc_1 + Xc_2 = j\underline{0.0445} + j\underline{0.0118} + j\underline{0.0563}/0.577 = j\underline{0.0977}$ PU(5)

$X_{SYSTEM} = X_{CABLE} + X_T = X_{LD} = j\underline{0.0977} + j\underline{0.059} - j\underline{0.167} = -j\underline{0.0103}(0.577) = -j\underline{0.0059}$ OHMS(5)

$VD_{XLV} = \sqrt{3}(\underline{100})(\underline{0.0059})/208 = -j\underline{0.0050}$ PU(2)

$VD_{ZLV} = \underline{0.0368}$ PU(3)

3. FOR BOTH SYSTEMS:

$VD_R = VD_{RMV} + VD_{RLV} = \underline{0.00618} + \underline{0.0363} = \underline{0.0425}$ PU

$VD_X = VD_{XMV} + VD_{XLV} = j\underline{0.00793} + (-j\underline{0.0050}) = j\underline{0.0030}$ PU

$VD_Z = \underline{0.0426}$ PU(3)

$V_{AIRCRAFT} = 1 - \underline{0.0426} = \underline{0.9574} > 0.942$ SO
VOLTAGE DROP IS ACCEPTABLE

$V_{AIRCRAFT} = \underline{114.8}$ VOLTS <u>LAGGING</u>

NOTES:
1. Calculations are based on Figure 13 diagram.

2. Underline denotes values which are not constant. A cursory check of other loads and cable lengths may be made by substituting applicable values for underlined values.

Figure 9
Voltage-Drop Calculations Using Actual Values

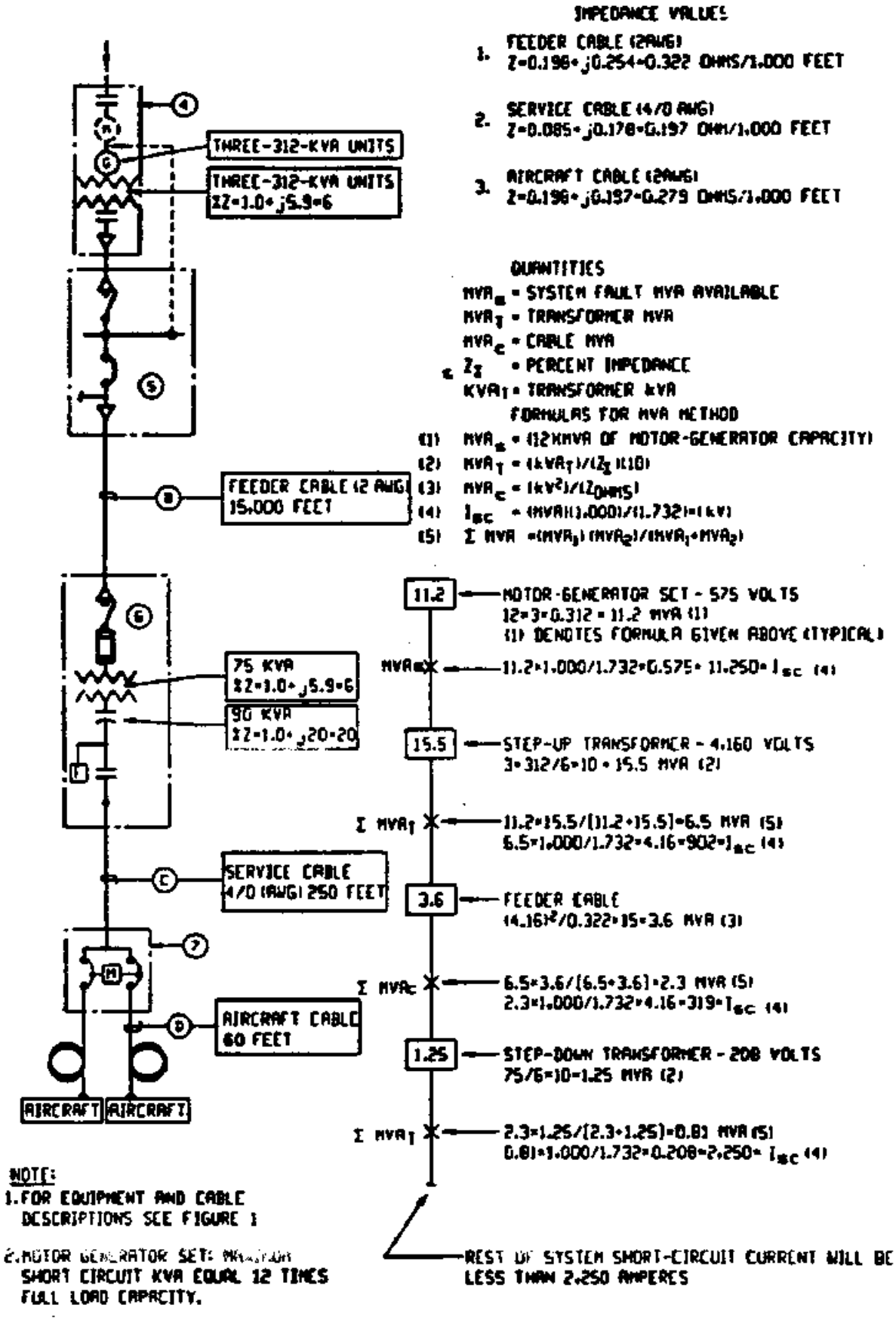

Figure 10
Short-Circuit Analysis

APPENDIX A

ANALYSIS OF 400-HERTZ CENTRALIZED POWER DISTRIBUTION SYSTEMS

Section 1: MAXIMUM FEEDER CABLE LENGTH

1.1 Variations. Seven different feeder cable lengths were analyzed in Case A to determine the maximum feeder cable length. The lengths varied from 5,000 feet for Case Al to 40,000 feet for Case A7. For a typical cable, the only parameters determining the voltage droop are resistance, inductance, and capacitance. The No. 2 American wire gauge (AWG) cable parameters used are as follows:

Resistance	0.198 ohms per 1,000 feet
Inductance	74×10^{-6} henries per 1,000 feet
Capacitance	0.603×10^{-6} farads per mile

The capacitance of the cable is compensated for by shunt inductance (shunt reactance). A 100-ampere, 0.8-power-factor load is assumed for each case. The series compensation (line drop compensator) is fixed at 12 percent.

Feeder lengths are as follows: Case A1 - 5,000 feet; Case A2 - 10,000 feet: Case A3 - 15,000 feet; Case A4 - 20,000 feet; Case A5 - 25,000 feet; Case A6 - 30,000 feet: and Case A7 - 40,000 feet.

1.2 Discussion. The per-unit resistance and reactance for each component are shown between the buses. Figure A-1 (Case A1) shows the per-unit resistance and reactance of the feeder cable between buses 2 and 3. Between buses 4 and 5, the 12-percent, voltage-compensation impedance shown is -jO.412 per unit for capacitance. The frequency conversion assembly's generator power input to bus 1 is in megavoltampere-ampere (MVA) units. The power is 28.6 kilowatts (kW) and the reactive power is 20.8 kilovars (kvar). All impedance parameters shown are in per-unit. The per-unit basis is one generator (312 kVA) and 118 volts, line-to-neutral (volts $_{1-n}$).

Bus 2 on the high side of the frequency conversion assembly' s transformer is at 4,160 volts, line-to-line (volts $_{1-1}$). The voltage here is 0.9951 per unit or 4,140 volts $_{1-1}$. At bus 3, which is the end of the distribution feeder cable, the voltage is 0.9924 per unit or 4,128 volts $_{1-1}$. This is the logical point in the system where the optimum feeder length is determined, since this is the point where the no-load voltage going to the last utilization service assembly on the feeder must be determined. Bus 4 is the low-voltage side of the utilization service assembly transformer. The voltage here is 0.9725 per unit on a 208-volt per-unit base or 202.3 volts.

Bus 5 is the load side of the utilization service assembly's line drop compensator. The voltage is 0.9998 per unit or essentially one per unit. It must be remembered that only one utilization service assembly is on the

system with a 100-ampere unit load for this case. Since the system is linear, the system voltage conditions can be calculated for more unit-loaded utilization service assemblies.

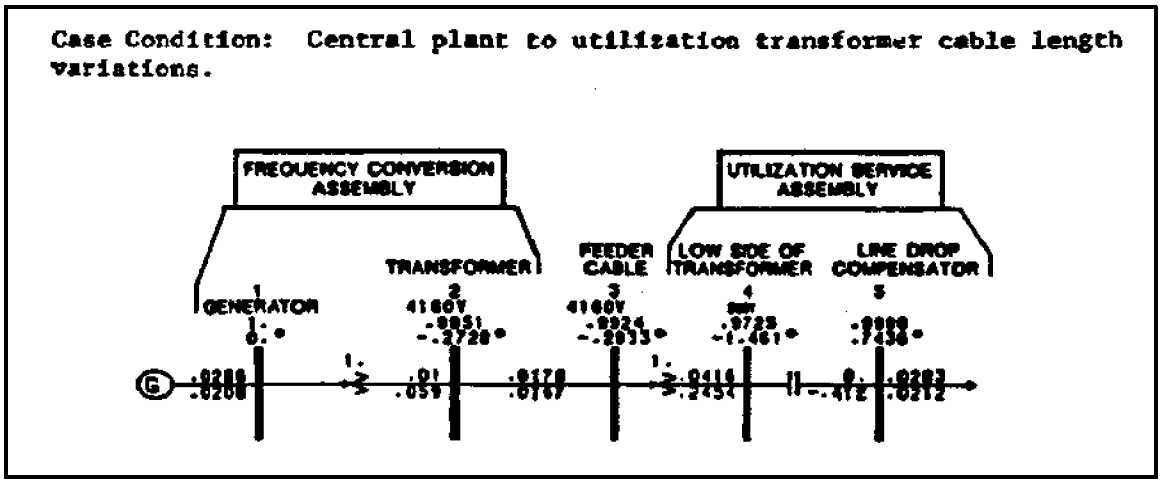

Figure A-1
5,000-Foot Feeder Cable-Case A-1

While the schematic (Figure A-1, for example) shows only one utilization service assembly on the feeder at bus 3, the remaining utilization service assemblies can be included by assuming that all utilization service assemblies for the feeder connect to bus 3 (see Table A-1). This will produce the largest steady-state voltage drop. The error introduced will not change the results. Analysis indicates that voltage at bus 3, when the last

utilization service assembly load is added, should not be less than approximately 0.942 per-unit voltage. This per-unit voltage will produce a no-load voltage of 113 volts+1-n, at the low side of a utilization service assembly transformer at no load when per-unit voltage is 208/120 volts.

This analysis was performed on a basis of a 113-volt, no-load voltage on the low side of the utilization service assembly transformer. To meet the criteria, the full-load and no-load voltages supplied at the end of the aircraft cable, which is the interface (aircraft connection input) point, must be no less than 113 volts or greater than 118 volts. The voltage drop for the aircraft cable connection must be considered. Therefore, all data presented in this appendix must be based on this requirement.

The other Case A runs, which are shown on Figures A-2 through A-7, are for various feeder cable lengths up to 40,000 feet. These figures have the same format as Figure A-1 (Case A-1), so their voltage characteristics can be compared. The optimum feeder length should be selected on a minimum voltage requirement for bus 3 (utilization service assembly's high-voltage side). The minimum steady-state voltage at bus 3 is recommended to be approximately plus 0.942 per unit when 120 volts root mean square (RMS) is the base. This voltage will set the minimum no-load voltage at bus 5 for all other utilization service assemblies on this feeder cable. This no-load voltage has been set for 113 volts at the utilization service assemblies, but the 113 volts minimum is also required at the aircraft interface point. The maximum feeder length is determined by the steady state voltage at the feeder cable end, which is determined by the cable length, cable parameters, and the load currents of all utilization service assemblies on the feeder cable.

1.3 Results. The results of the Case A analyses are tabulated in Table A-1. Voltage was regulated at the generator-transformer, high-voltage side (4,160 volts).

For a voltage drop on a 40,000-foot feeder not to exceed criteria, only two 75-kVA utilization service assemblies (each with a 100-ampere 0.8-power-factor unit load) can be supplied. Utilization service assemblies are capable of serving two 100-ampere 0.8-power-factor unit loads. If both loads are supplied from one utilization service assembly, then a 40,000-foot feeder cable could only serve one assembly without exceeding voltage drop criteria. For a 20,000-foot feeder, only three unit loads can be supplied; for a 10,000-foot feeder, only five unit loads can be supplied. The optimum length of feeder cable is determined by the number of utilization service assemblies on the feeder. The acceptable number of utilization service assemblies per feeder cable length is obtained by using the voltage drop at bus 3 in per unit for the various lengths and dividing this quantity into 0.0583 per unit (specified steady state maximum droop at bus 3). This specified steady state limit will produce a utilization service assembly no-load minimum voltage of 113 volts --L-N (a minimum voltage which should also be provided at the aircraft interface point).

Throughout this study one 75-kVA utilization service assembly (200-ampere capacity) is assumed to supply one 100-ampere 0.8-power-factor unit load. When the transformer is loaded with two unit loads, i,e, its full capacity, the results of this study can be related by dividing the maximum allowable number of utilization service assemblies indicated by two.

Examples of calculations for determining the maximum number of utilization service assemblies are given below:

For a 40,000-foot feeder cable: $\frac{0.0583}{(1 - 0.9726)} = 2.1 = \text{two}$

For a 10,000-foot feeder cable: $\frac{0.0583}{(1 - 0.9896)} = 5.6 = \text{five}$

Although Table A-1 shows distribution feeders up to 40,000 feet in length, economics dictates that the 400-Hz medium-voltage distribution systems must be designed to have feeder lengths not greater than 15,000 feet.

Table A-1
Feeder-Cable Length Versus Loads (1)

Cable Length Feet	Bus 3 Per-Unit volts (2)	Number of Unit Loads (3)	No-Load Volts 1-n (4)
40,000	0.9775	One	117.3
	0.9551	Two	114.6 (5)
	0.9325	Three	111.9
30,000	0.9832	One	118.0
	0.9664	Two	116.0
	0.9496	Three	115.0
25,000	0.986	One	118.3
	0.972	Two	116.6
	0.958	Three	115.0
	0.9391	Four	112.7
20,000	0.0889	One	118.7
	0.9778	Two	117.3
	0.9667	Three	116
	0.9556	Four	114.7
	0.9445	Five	113.3
	0.9334	Six	112
15,000	0.9917	One	119
	0.9834	Two	118
	0.9751	Three	117
	0.9668	Four	116

Table A-1 (Continued)
Feeder-Cable Length Versus Loads (1)

Cable Length Feet	Bus 3 Per-Unit volts (2)	Number of Unit Loads (3)	No-Load Volts 1-n (4)
	0.9585	Five	115
	0.9502	Six	114
	0.942	Seven	113
10,000	0.9945	One	119.3
	0.9890	Two	118.7
	0.9835	Three	118.0
	0.9780	Four	117.4
	0.9725	Five	116.7
	0.9670	Six	116.0
	0.9610	Seven	115.3
	0.9560	Eight	114.7
	0.9505	Nine	114.0
	0.9450	Ten	113.4
5,000	0.9973	One	119.6
	0.9919	Three	119.0
	0.9865	Five	118.4
	0.9811	Seven	117.7
	0.9757	Nine	117.1
	0.9703	Eleven	116.4

(1) Voltage regulated on the high-voltage side (4,160 volts) of the frequency conversion assembly. This eliminates the 0.0049 voltage drop on bus 1.

(2) The utilization service assembly transformer's per-unit low-voltage base is 208/120 volts.

(3) The 100-ampere, 0.8-power-factor unit load is assumed at the load side of the line drop compensator.

(4) Voltage does not include service cable or aircraft cable effects on voltage drop.

(5) The underlined rows denote the maximum number of 100-ampere, 0.8-power-factor unit loads (one on each utilization service assembly) on the feeder cable to maintain 112-volts minimum at utilization service assemblies. Adjustment may be required to also maintain 113 volts minimum at the aircraft interface point.

Case Condition: Central plant to utilization transformer cable length variations.

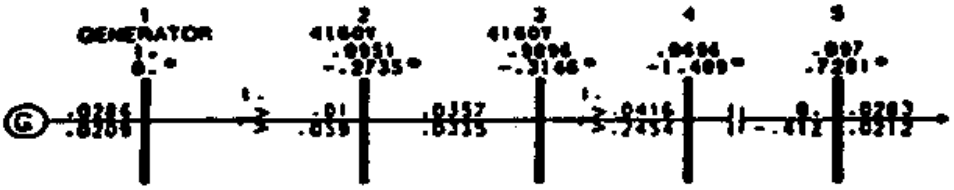

Figure A-2
10,000-Foot Feeder Cable - Case A2

Case Condition: Central plant to utilization transformer cable length variations.

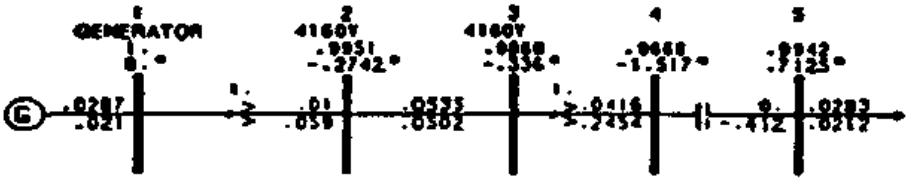

Figure A-3
15,000-Foot Cable - Case A3

Case Condition: Central plant to utilization transformer cable length variations.

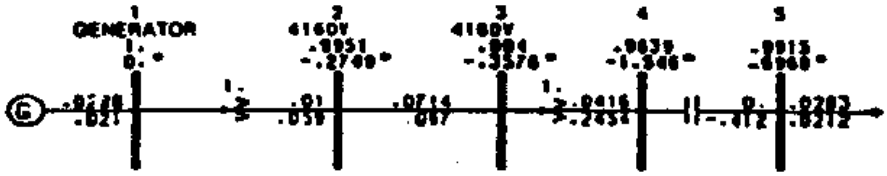

Figure A-4
20,000-Foot Feeder Cable - Case A4

Case Condition: Central plant to utilization transformer cable length variations.

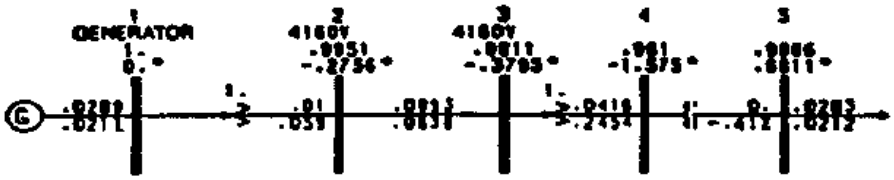

Figure A-5
25,000-Foot Feeder Cable - Case A5

Case Condition: Central plant to utilization transformer cable length variations.

Figure A-6
30,000-Foot Feeder Cable - Case A6

Case Condition: Central plant to utilization transformer cable length variations.

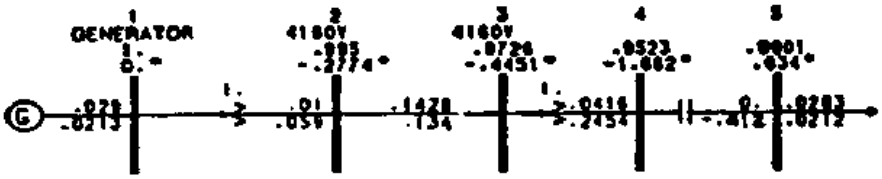

Figure A-7
40,000-Foot Feeder Cable - Case A7

Section 2: SINGLE AND MULTIPLE UNIT LOADS

2.1 Variations. The effects of single and multiple 100-ampere 0.8-power-factor unit loads were analyzed in Case D to determine if the feeder cables could handle multiple loads and still comply with voltage-drop limitations. The voltage range of 108 volts minimum to 118 volts maximum, as specified in MIL-STD-704, is the aircraft operating range. This voltage range allows for a 0- to 5-volt drop in the internal electrical aircraft distribution system. Therefore, the minimum voltage at the interface (aircraft connection input) point should be 113 volts RMS and the maximum voltage should be 118 volts RMS. Figures A-8 through A-12 (Case D) are a series of computer runs based on the results of Section A.1. The analysis is concerned with only a minimum, steady state, no-load utilization service assembly voltage of 113 volts$_{1-n}$, but the 113 volts minimum should also be maintained at the aircraft interface point. The minimum per-unit voltage at the end of the feeder cable will be 0.942. The series compensation will not affect the results of this section. Figure A-8 (Case Dl) has one utilization service assembly or a single unit load of 100- ampere 0.8-power-factor. The bus 6 per-unit voltage is 0.9759 per unit or 117.1 volts. The bus 3 per-unit voltage is 0.9865 per unit or 118.4 volts on a 120-volt per-unit base. When two utilization service assemblies are supplied by a feeder cable (Figure A-9) each with a 100-ampere 0.8-power-factor unit load, bus 3 and bus 6 per-unit voltages are 0.9726 and 0.9618, respectively. With four unit-loaded utilization service assemblies (Figure A-10), each with 100-ampere, 0.8-power-factor load per 75-kVA transformer, the bus 3 and bus 6 per-unit voltages are 0.9432 and 0.9321, respectively. The maximum number of unit-loaded utilization service assemblies permitted on a 15,000-foot feeder cable is four in order for voltage not to drop below 113 volts at utilization service assemblies. The 113 volts minimum must be maintained at the aircraft interface point also. This can be achieved by setting the line drop compensation high enough to offset the inductive voltage drop which occurs from the point of the utilization service assembly input to the aircraft interface point. This is the limit imposed by the droop in the bus 3 voltage. The minimum per-unit voltage at bus 3 is 0.942. The results of this section are comparable to those of Section A.1. Table A-2 summarizes Case D data.

2.2 Discussion. The service cable length and series (line drop compensator) compensation have little effect on feeder cable lengths.

Table A-2 indicates that four unit-loaded utilization service assemblies on a 15,000-foot feeder cable will have a bus 3 voltage of 0.943 per unit and provide a no-load utilization service assembly voltage of 113.2 volts+1-n,. The required 113- volt minimum, no-load, steady state voltage aircraft interface point must also be checked. This will be covered later in this analysis. All tests were made with one unit load per assembly. Two unit loads on the same assembly will produce the same results as one unit load on two assemblies.

Table A-2
Voltage Drop on a 15,000-Foot Feeder Cable (1)

100-Ampere 0.8-power-factor (36-kVA) Unit Loads (2)	Bus 3 Per-Unit Volts	No-Load Volts 1.n-
Case D1 - One	0.986	118.3
Case D2 - Two	0.973	116.8
- Three	0.956	114.7
Case D3 - Four	0.943	113.2
- Five	0.924	110.9
Case D4 - Six	0.911	109.3
- Seven	0.894	107.3
Case D5 - Eight	0.877	105.2

(1) Voltage does not include aircraft cable effects on voltage drop.
(2) If two 100-ampere, 0.8-power-factor unit loads are supplied from one utilization service assembly, this is equivalent to two unit loads.

Since the results of this section are comparable to those of Section A.1, the number of loaded feeder cables of different lengths can be obtained from Section A.1.

Figure A-13 shows the steady state conditions of the system (100-ampere 0.8-power-factor unit load at bus 11) before a 100-ampere 0.8-power-factor unit load is applied at bus 7. The system parameters are 15,000 feet of No. 2 AWG feeder cable; 200 feet of No. 4/0 AWG service cable; and 40 feet of No. 2 AWG aircraft cable. The series compensation is set at 12 percent. Power supplied is based on input from one 312-kVA frequency conversion assembly generator. No transient voltages have a magnitude significant enough to cause problems.

The transient limit is 0.68 per unit and 1.52 per unit. The steady state value at buses 7 and 11 must be above 0.942 per unit when the per-unit voltage is 120 volts RMS.

Figure A-14 has an initial load at bus 11 which is equivalent to two unit-loaded utilization service assemblies with a total 200- ampere 0.8-power-factor load. A 100-ampere 0.8-power-factor unit load is stepped on at bus 7. The results indicate no transient or steady state problems.

With load voltage compensation, each assembly percent compensation setting should compensate for the reactance occurring between the assembly input and the aircraft interface point. When this is done, the end voltage will not rise above 118 volts. The steady state values in the figures of this section have been established prior to the application of the 100-ampere 0.8-power-factor step load. The compensation is set at 12 percent.

On this basis, the per-unit voltage at bus 11 shown on Figure A-14 is 0.9381 which is below the criteria of 0.942. The steady state result was obtained using the 12-percent voltage compensation setting. For this assembly, the setting needs to be increased to 18 percent and the per-unit voltage will increase to more than 0.942.

Figure A-15 has an initial load at bus 11 equivalent to three unit-loaded utilization service assemblies with a total 300-ampere 0.8-power-factor load. A 100-ampere 0.8-power-factor unit load is stepped on at bus 7. This indicates that the steady state voltage at bus 11 is below the minimum of 0.942 per unit (113 volts). It also indicates that the series compensation needs to be increased from 12 to 20 percent for this condition (four unit loads) to meet minimum voltage requirements.

Figure A-16 has an initial load at bus 11 which is equivalent to four unit-loaded utilization service assemblies with a total 400- ampere 0.8-power-factor load. A 100-ampere 0.8-power-factor unit load is stepped on at bus 7. This results in a steady state voltage below the minimum voltage specified (0.942 per unit). Bus 11 will be approximately 0.897 per unit, and bus 7 will be 0.903 per unit with 12 percent series compensation. When the series compensation is increased from 12 to 20 percent, the voltage at the load will be raised 2.2 percent.

Two voltage droops must be considered for the maximum and minimum load changes which keep the system's steady state voltage between 113 and 118 volts (bus 7 and bus 11, respectively). These are the voltage droops on the feeder cable from all unit-loaded utilization service assemblies and from the feeder cable to the airplane interface point for the load on the service cable. For example: If the droop on the feeder cable is 0.058 per unit for a total 400-ampere load and the droop from the input of a utilization service assembly to the aircraft interface point from a load of 200 amperes is compensated by a series compensation (12 to 20 percent) so that no reactive droop exists for the service cable, then the 0.058-per-unit droop for the feeder cable will appear at the aircraft interface point and be within the 113- to 118-volt requirement. A droop of 0.058 on a 120-volt base is 7 volts: thus, 120 volts minus 7 volts equals 113 volts RMS. All reactive droop from the input of the utilization service assembly to the aircraft interface point should be compensated by the series compensation circuit.

The bus numbers from Figure A-16 can be used to illustrate reactive droop compensation. If the voltage droop to bus 3 is held at a given percent for a given total load, then the compensation for the reactive droop from bus 3 through an assembly to an aircraft interface point can be provided. The last assembly on a feeder cable must have an input voltage of no less than 0.942 per unit. Resistance in the service cable and aircraft cable will then be the determining factor for the voltage at the aircraft interface point. In the final design, resistance will also have to be evaluated as a limiting factor in cable lengths.

Case Condition: Fixed cable lengths with load variations. Parameters are 15,000-foot feeder cable length, 120-foot service cable length, and 100-ampere, 0.8-power-factor unit load per utilization transformer.

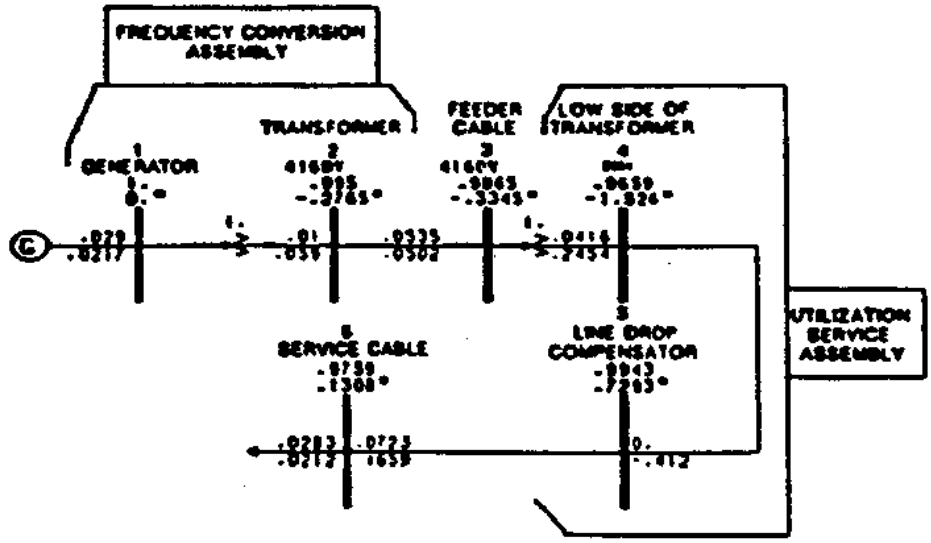

Figure A-8
One-Unit Steady State Load on Feeder - Case D1

Case Condition: Fixed cable lengths with load variations. Parameters are 15,000-foot feeder cable length, 120-foot service cable length, and 100-ampere, 0.8-power-factor unit load per utilization transformer.

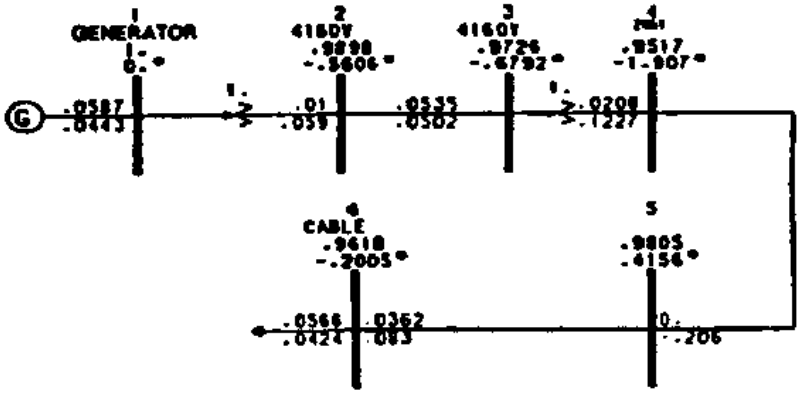

Figure A-9
Two-Unit Steady State Load on Feeder - Case D2

Case Condition: Fixed cable lengths with load variations. Parameters are 15,000-foot feeder cable length, 120-foot service cable length, and 100-ampere, 0.8-power-factor unit load per utilization transformer.

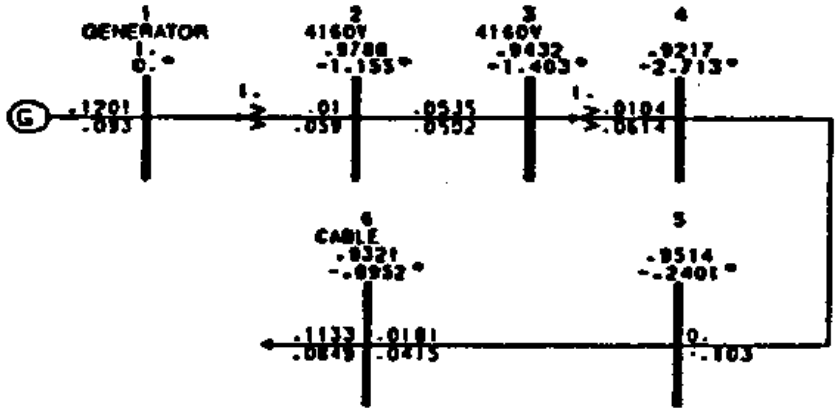

Figure A-10
Four-Unit Steady State Load on Feeder - Case D3

Case Condition: Fixed cable lengths with load variations. Parameters are 15,000-foot feeder cable length, 120-foot service cable length, and 100-ampere, 0.8-power-factor unit load per utilization transformer.

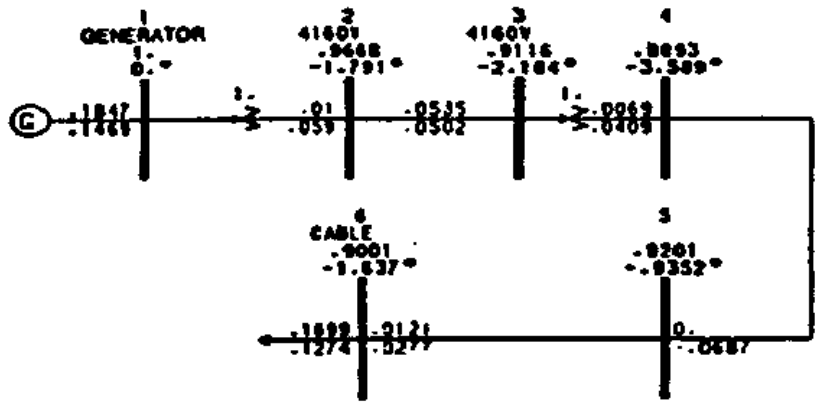

Figure A-11
Six-Unit Steady State Load on Feeder - Case D4

Case Condition: Fixed cable lengths with load variations. Parameters are 15,000-foot feeder-cable length, 120-foot service cable length, and 100-ampere, 0.8-power-factor unit load per utilization transformer.

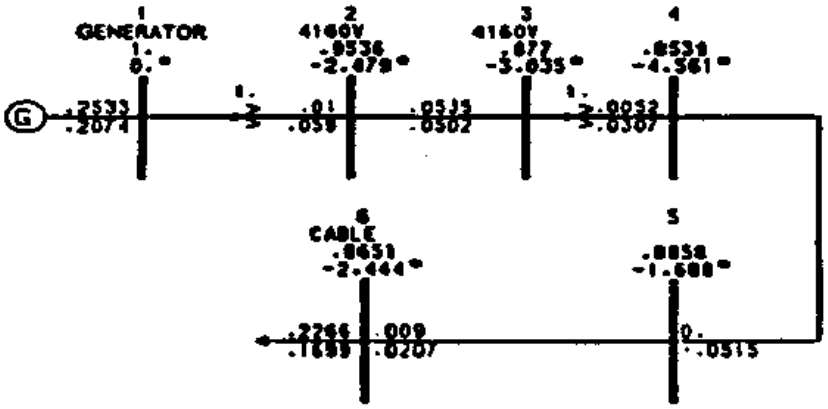

Figure A-12
Eight-Unit Steady State Load on Feeder - Case D5

Case Condition: Fixed cable lengths with initial load variations and fixed stepped load. Parameters are 15,000 foot feeder cable length, 200-foot service cable length, 40-foot aircraft cable length, and 100-ampere 0.8-power-factor unit loads.

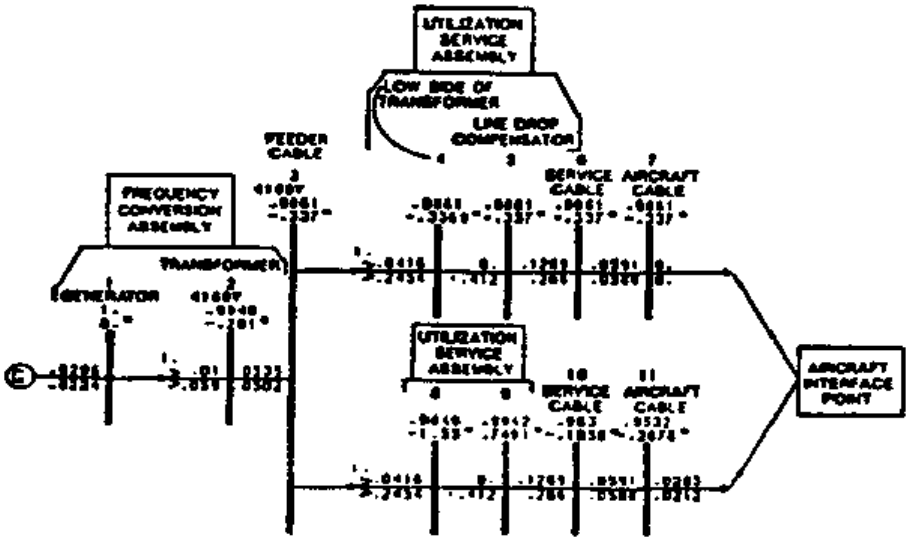

Figure A-13
Initial One-Unit Load Plus Stepped One-Unit Load

Case Condition: Fixed cable lengths with initial load variations and fixed stepped load. Parameters are 15,000-foot feeder cable length, 200-foot service cable length, 40-foot aircraft cable length, and 100-ampere 0.8-power-factor unit loads.

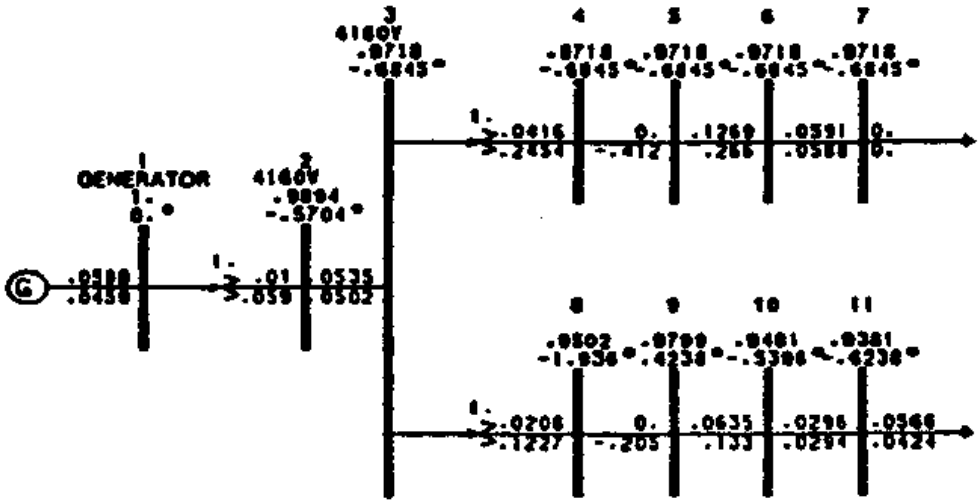

Figure A-14
Initial Two-Unit Load Plus Stepped One Unit Load

Case Condition: Fixed cable lengths with initial load variations and fixed stepped load. Parameters are 15,000-foot feeder cable length, 200-foot service cable length, 40-foot aircraft cable length, and 100-ampere 0.8-power-factor unit loads

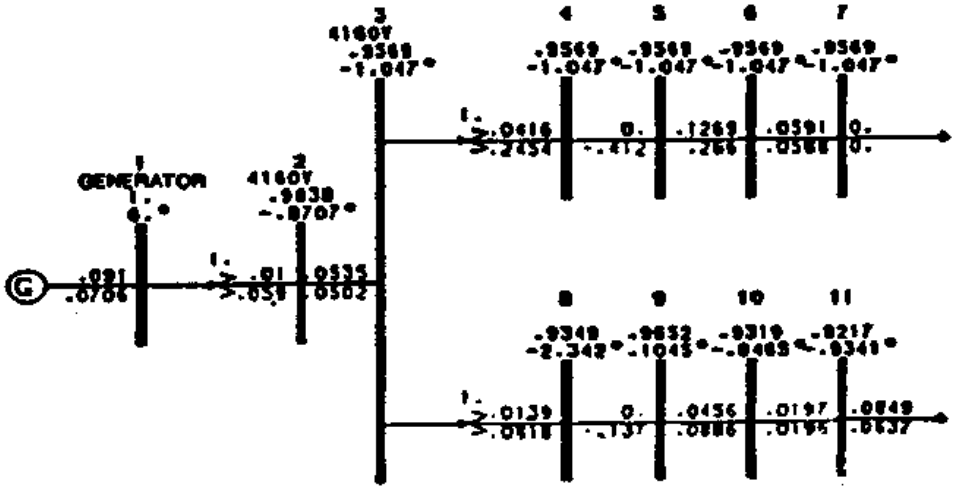

Figure A-15
Initial Three-Unit Load Plus Stepped One Unit Load

Case Condition: Fixed cable lengths with initial load variations and fixed stepped load. Parameters are 15,000-foot feeder cable length, 200-foot service cable length, 40-foot aircraft cable length, and 100-ampere 0.8-power-factor unit loads.

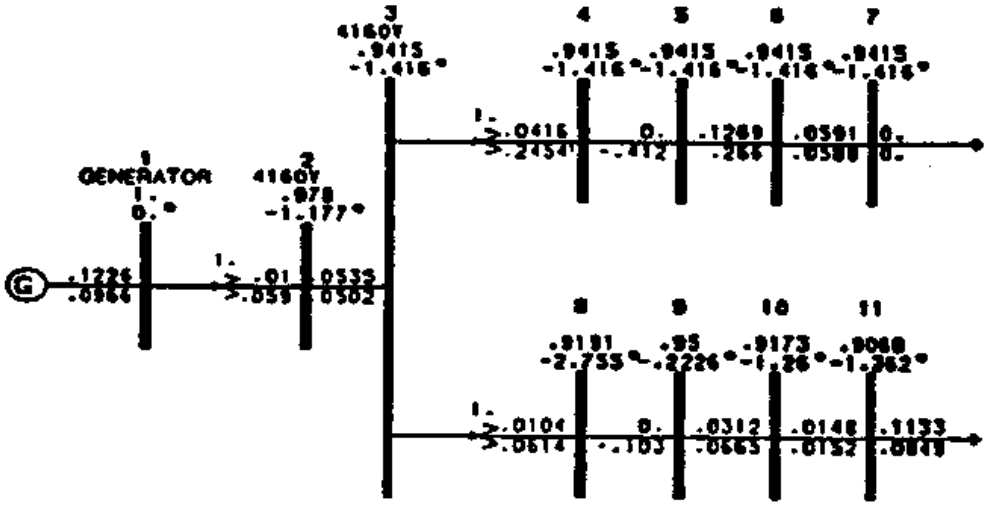

Figure A-16
Initial Four-Unit Load Plus Stepped One Unit Load

Section 3: MAXIMUM SERVICE CABLE LENGTH FOR A 100-AMPERE UNIT LOAD

3.1 Variations. The length of the service cable used to supply the 100-ampere 0.8-power-factor loads will affect the voltage drop at the aircraft interface point, which must not be less than 113 volts to meet criteria. Case B analyzes the effects of service-cable lengths according to this requirement. Cases B1 through B5 analyze the drop through the service cable only. Cases Bll through B15 analyze the drop through the combined service cable and aircraft cable to the aircraft interface point, the point where minimum-voltage criteria must be met.

3.2 Discussion. The maximum length of the service cable is determined by MIL-STD-704's steady state voltage requirement for the aircraft's internal operating voltage, which is 108 volts minimum. The minimum voltage at the aircraft interface point has to allow for a 0- to 5-volt drop in the aircraft. Therefore, the minimum voltage at the aircraft interface connector is 113 volts RMS. The four parameters that determine the voltage at the connector are: the load, the service cable impedance, line drop compensation provided, and the voltage at the feeder cable where the utilization service assembly is connected. Cases Bl through B15 depict voltage drops for several lengths of service cables. The series of runs from Cases B1 through B5 establish a maximum length of service cable for one set of cable parameters with a fixed 12-percent line compensation.

For Cases B1 to B5 (Figures A-17 through A-21, respectively), the service cable length was varied from 40 to 200 feet. The service cable characteristics are:

Resistance = 0.0807 ohms per 1,000 feet
Inductance = 0.1853 ohms per 1,000 feet

A 100-ampere, 0.8-power-factor load is assumed at bus 6 (load end of service cable). This set of runs is preliminary and does not show a detailed distribution to the load.

Service cable lengths are as follows: Case B1 - 40 feet: Case B2 - 80 feet:Case B3 - 120 feet: Case B4 - 160 feet: and Case B5 - 200 feet. Case B figures are similar to Case A figures, except that the effects of the service cable lengths have been indicated. This adds a sixth bus at the end of the service cable. The two important voltages are the per-unit voltages at bus 3 and bus 6. Bus 3 per-unit voltage determines the no-load voltage on all utilization service assemblies on this feeder cable, and bus 6 voltage indicates the steady state load voltage at the end of the service cable. To meet the MIL-STD-704 specification for steady state voltage, the voltage at the aircraft interface connection must be kept above 113 volts RMS.

Using the system parameters given and a service cable length of 200 feet (Case B5), the steady-state voltage at bus 6 with a dedicated feeder and a 100-ampere 0.8-power-factor load is 115.6 volts, as shown on Figure A-21.

The bus 6 value (utilization service assembly output) is 119.3 volts; the bus 3 value (end of feeder cable) is 0.9863 per unit. The voltage at bus 3 indicates that four 75-kVA utilization service assemblies could be added to the feeder cable, based on Table A-2; that is, one per-unit load gives the bus 3 voltage indicated on Figure A-21. However, four per-unit loads, as shown by Table A-2, will not decrease voltage below the criteria. The maximum service cable length is used to determine the voltage at the end of the feeder cable (bus 3). After the steady state minimum voltage is established as 0.942 per unit at bus 3, the maximum service cable length can be determined.

Assume that four unit-loaded utilization service assemblies on a feeder cable produce voltage greater than 0.942 per unit at bus 3 or 113 volts on the last utility service assembly transformer's low-voltage side at the no-load condition. The percent series compensation is set to compensate for the fixed utilization service assembly's transformer impedance, the variable service cable impedance, and the fixed aircraft cable impedance. The procedure adds all the inductive reactances from bus 3 to the aircraft interface connector input. Choose a series voltage compensation percentage that will cancel these reactances and some of the feeder cable reactance. It is possible too overcompensate for the inductive reactance. This will produce a capacitive reactance drop in the system. The final desired result is that the voltage at the aircraft interface connector does not go below 113 volts RMS or above 118 volts RMS, in the steady-state condition.

Figures A-22 through A-26 (Cases Bll through B15, respectively) are for the cable characteristics given below:

No. 2 AWG cable 0.198 + jO.197 ohms per 1,000 feet
No. 4/0 AWG cable 0.085 + jO.178 ohms per 1,000 feet

The series compensation is 12 percent. The voltage effects resulting from the No. 4/0 AWG service cable and the No. 2 AWG aircraft cable are separated for each figure's single-line diagram.

The voltage at bus 3 has been selected to determine the feeder cable maximum length. This voltage has been selected so that the no-load voltage on a utilization service assembly near the end of the feeder cable will be no less than 113 volts $_{1\text{-}n}$, as discussed in Section A.1.

The maximum service cable length for a 100-ampere, 0.8-power-factor unit load is determined as follows. It is assumed that the feeder cable length and number of unit-loaded utilization service assemblies have been determined. This sets 113 volts as a minimum steady state voltage at a non-loaded utilization service assembly transformer.

The inductive reactances of the utilization service assembly transformer, aircraft cable, and the service cable are added together on a

common base. The 20-percent series voltage compensation (-j0.692 per unit) is on the low-voltage base. The series compensation per-unit impedance value has to be greater than the total inductive reactance on the same per-unit base.

Referring to Figure A-24 (service cable length equals 200 feet), the total per-unit inductive reactance from bus 3 to bus 7 is j0.2454 + j0.2668 + j0.0793 = j0.5915. Since the series compensation of 20 percent is equal to -j0.692 per-unit reactance (Table A-3), the minimum voltage at the airplane interface connector will be greater than 113 volts RMS. The resistance of the cables and the utilization service assembly transformer also have to be included in the analysis.

Table A-3
90-kVA Line Drop Compensator's Per-Unit Impedance

Compensation Percent	Per-Unit Ohms on 118-Volt Base	
	90-kVA Base	312-kVA Base
5	-j0.023	-j0.172
6	-j0.028	-j0.209
7	-j0.033	-j0.246
8	-j0.037	-j0.276
9	-j0.042	-j0.313
12	-j0.055	-j0.412
14	-j0.065	-j0.485
16	-j0.073	-j0.545
18	-j0.084	-j0.627
20	-j0.093	-j0.692

Per-Unit Ohms on a 90-kVA Base = (0.204)squared/0.09 = 0.4624 ohms
Example: 5-percent ohms = 0.05 x 0.4624 = 0.023 ohms

If four unit-loaded utilization service assemblies (100-ampere, 0.8-power-factor load) were on a feeder cable of 15,000 feet, the maximum service cable length is No. 4/0 AWG - 270 feet and the length for the aircraft cable to the airplane interface connector is No. 2 AWG - 40 feet.

3.3 Results. Table A-4 shows the effects of the various parameters on the maximum service cable length for 100-ampere, 0.8-power-factor unit loads. The beneficial effects of paralleling service, thus reducing the impedance of the load circuits, is the same as increasing the series compensation. When the series compensation is set at 20 percent, the service cable maximum lengths, as given in Table A-4, should be adequate for most installations.

If the series compensation is changed form 12 to 14 percent, the airplane interface connector steady state voltage (100-ampere, 0.8-power-factor load) will increase by 0.0497 - 0.0428 = 0.0069 per unit (Table A-5) where unit voltage is 118 $volt_{1-n}$. This increase in voltage at the airplane service interface connector is:

$$(0.0069)\ (118\ volts_{1-n}) = 0.814\ volts_{1-n}$$

The results are not linear. An increase from 12 to 20 percent will increase the aircraft interface connector voltage by 2.6 $volts_{1-n}$ for a given cable length (for a 100-ampere, 0.8-power-factor load).

The resistance of the cables and transformers has a more pronounced effect on voltage drop at high series compensation where the reactive impedance cancels out.

Case Condition: Service cable length variations for a 15,000-foot feeder cable length. Aircraft cable effects not analyzed.

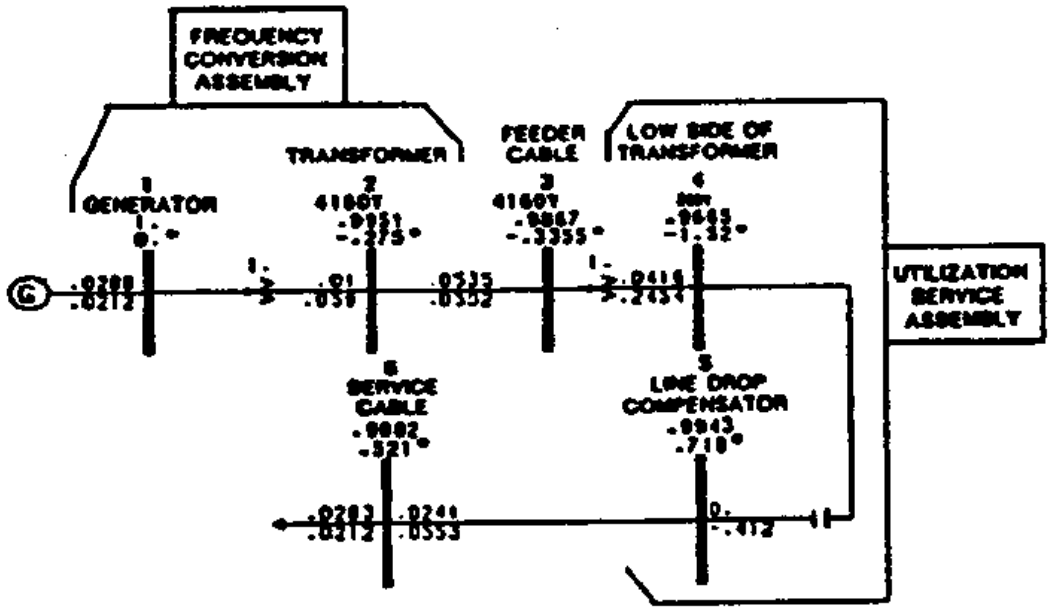

Figure A-17
40-Foot Service Cable - Case B1

Case Condition: Service cable length variations for a 15,000-foot feeder cable length. Aircraft cable effects not analyzed.

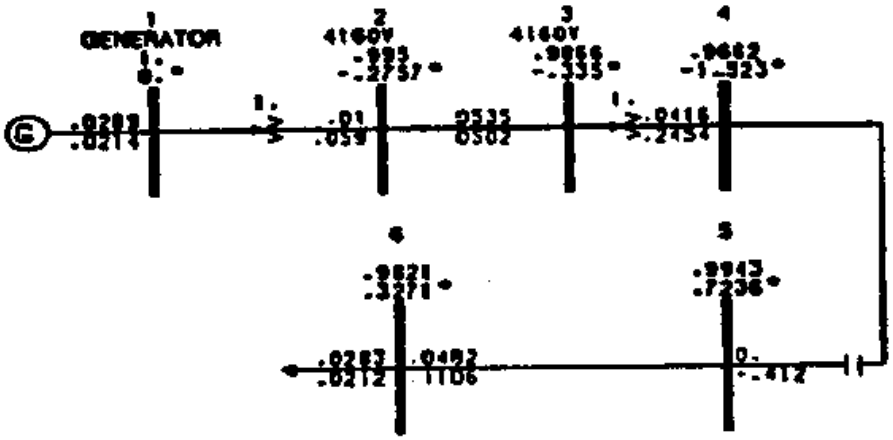

Figure A-18
80-Foot Service Cable - Case B2

Case Condition: Service cable length variations for a 15,000-foot feeder cable length. Aircraft cable effects not analyzed.

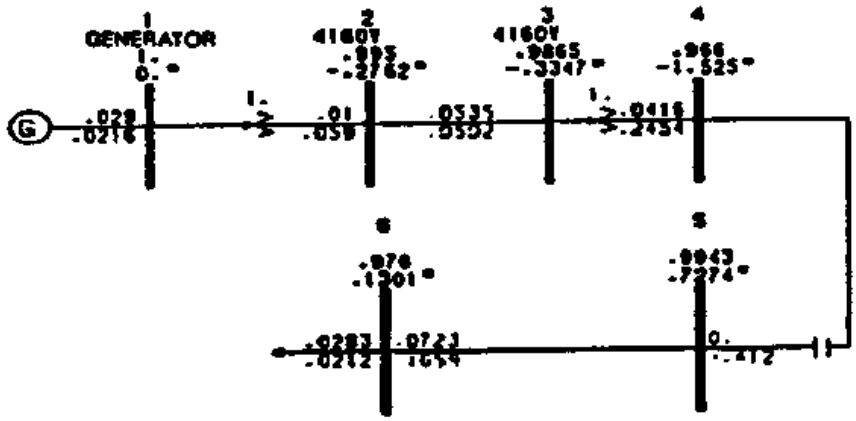

Figure A-19
120-Foot Service Cable - Case B3

Case Condition: Service cable length variations for a 15,000-foot feeder cable length. Aircraft cable effects not analyzed.

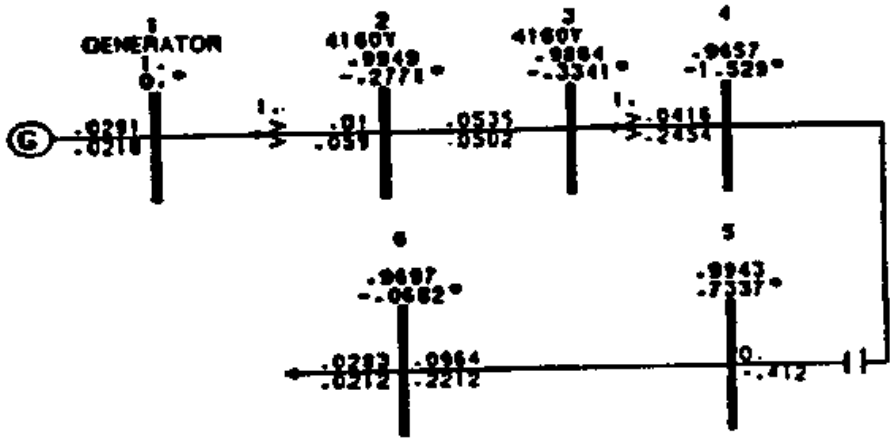

Figure A-20
160-Foot Service Cable - Case B4

Case Condition: Service cable length variations for a 15,000-foot feeder cable length. Aircraft cable effects not analyzed.

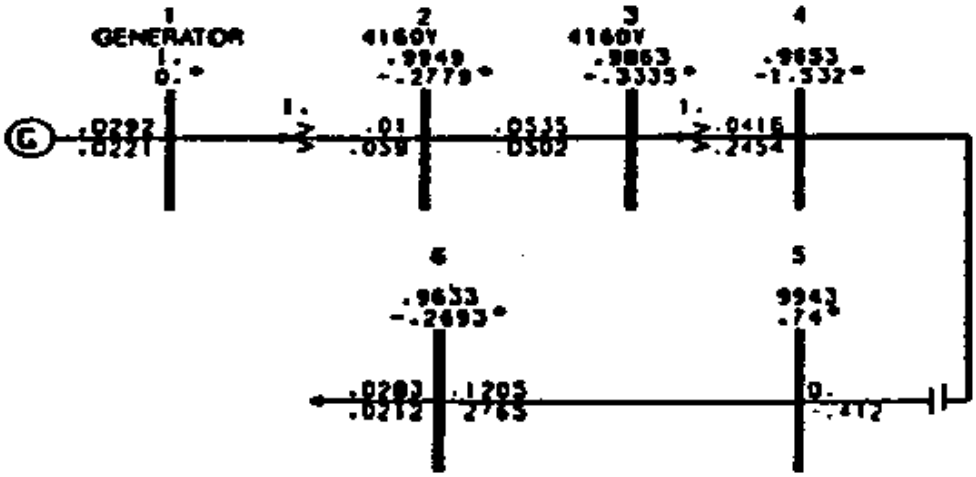

Figure A-21
200-Foot Service Cable - Case B5

Case Conditions: Service cable length variations; aircraft cable effects analyzed. Parameters are 15,000-foot feeder cable length and 40-foot aircraft cable length.

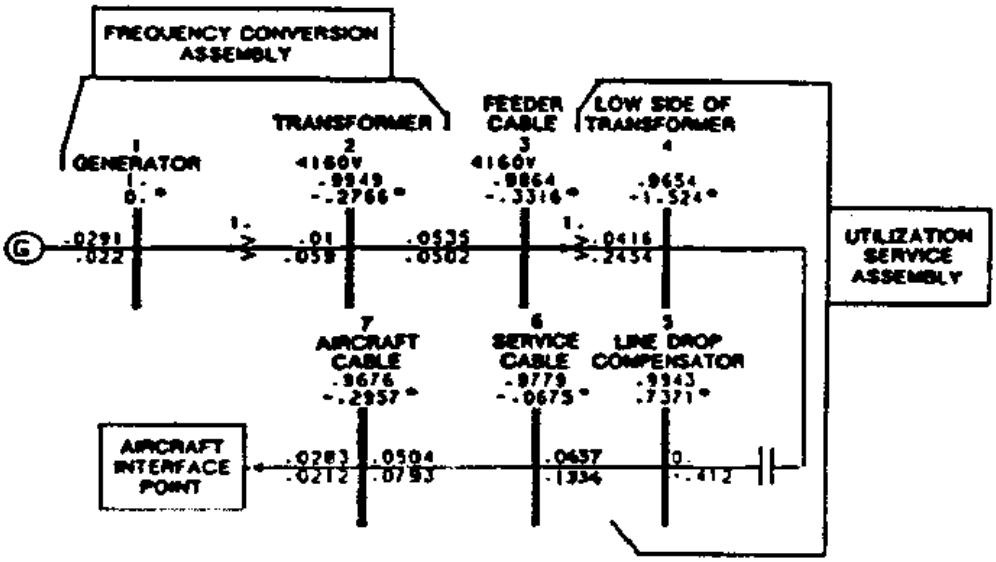

Figure A-22
100-Foot Service Cable Plus Aircraft Cable - Case B11

Case Conditions: Service cable length variations; aircraft cable effects analyzed. Parameters are 15,000-foot feeder cable length and 40-foot aircraft cable length.

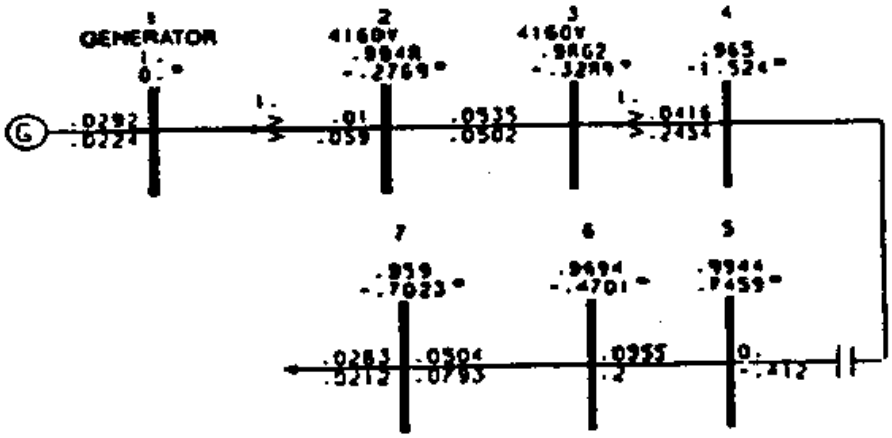

Figure A-23
150-Foot Service Cable Plus Aircraft Cable - Case B12

Case Conditions: Service cable length variations; aircraft cable effects analyzed. Parameters are 15,000-foot feeder cable length and 40-foot aircraft cable length.

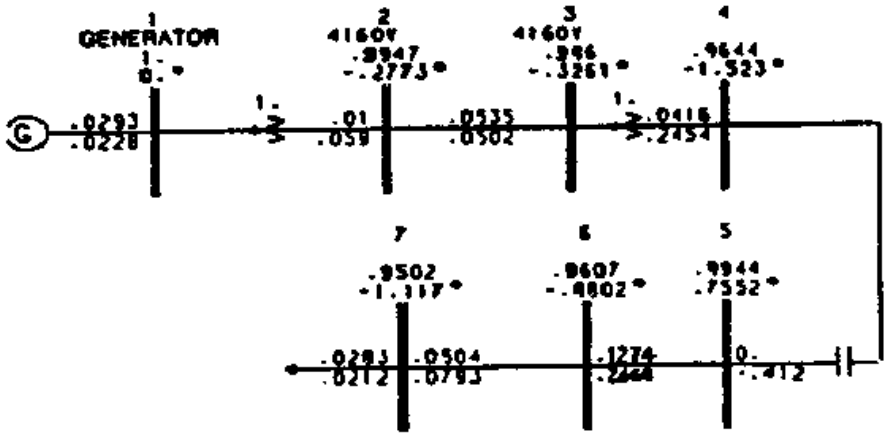

Figure A-24
200-Foot Service Cable Plus Aircraft Cable - Case B13

Case Conditions: Service cable length variations; aircraft cable effects analyzed. Parameters are 15,000-foot feeder cable length and 40-foot aircraft cable length.

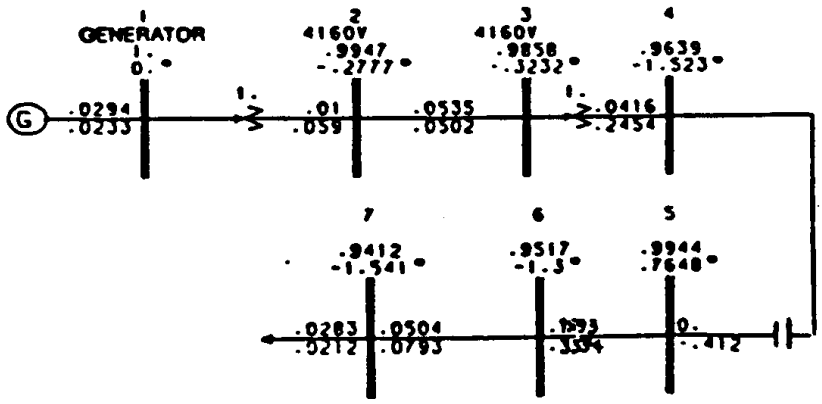

Figure A-25
250-Foot Service Cable Plus Aircraft Cable - Case B14

Case Conditions: Service cable length variations; aircraft cable effects analyzed. Parameters are 15,000-foot feeder cable length and 40-foot aircraft cable length.

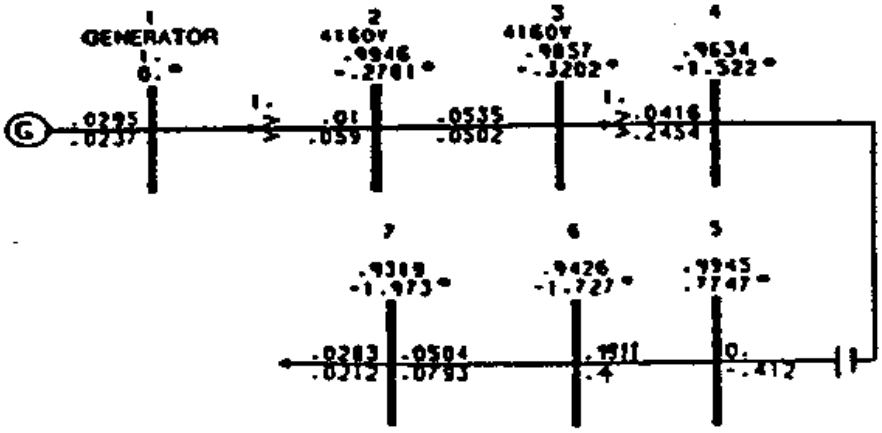

Figure A-26
300-Foot Service Cable Plus Aircraft Cable - Cast B15

Table A-4
Service Cable Length Versus Loads and Feeder Cable Lengths (1)

Feeder Cable Length Feet	Number of Unit Loads on Feeder	Maximum Service Cable Length (2) Feet
5,000	1	550
	3	525
	5	500
	7	450
	9	375
10,000	1	550
	2	500
	4	425
	5	350
15,000	1	525
	2	450
	4	300
20,000	1	500
	2	425
	3	300
25,000	1	475
	2	350
	3	150
30,000	1	475
	2	300
40,000	1	425
	2	150

(1) Parameters are as follows:
No. 4/0-AWG service cable, 0.085 + j0.178 ohms per 1,000 feet
Series compensation, 20 percent
Generator voltage regulated at high voltage side (4,160 volts)
No. 2-AWG aircraft cable, 40 feet
No. 2-AWG feeder cable, 15,000 feet (4,160 volts)
Unit Loads, 100-ampere, 0.8-power-factor each

(2) Length to assure that steady state voltage at aircraft interface point is not less than 113 volts.

Table A-5
90-kVA Line Drop Compensator's Per-Unit Voltage Increase (1)

Line Drop Compensation Percent	Low-Voltage Increase Per-Unit Volts
12	0.0428
14	0.0497
16	0.0548
18	0.0609
20	0.0646

(1) Parameters are:
15,000-foot feeder cable
200-foot service cable
40-foot aircraft cable and
100-ampere, 0.8-power-factor unit loads

Section 4: MAXIMUM LOAD CHANGES ALLOWED ON THE SYSTEM

4.1 Variations. Load changes will affect the amount of load which a feeder cable can handle. Case C analyzes the impact of load changes on the steady state voltage. Analyses of transient and motor-starting runs do not indicate adverse effects on the system when the guidelines are followed.

This analysis was made with one feeder cable circuit from the central generation system. Each feeder cable with utilization service assemblies shall be essentially a separate circuit in the steady state condition.

4.2 Steady State Load Changes. Maximum load changes are limited by the steady state requirement for load voltage.

MIL-STD-704 limits the steady state phase voltage to a range of 108.0 volts RMS to 118.0 volts RMS in the normal mode or 102.0 volts RMS to 124.0 volts RMS in the emergency mode. These voltage-range limits are for equipment inside the aircraft, and these limits take into account the 0- to 5-volt drop permitted internally. Therefore, the voltage at the airplane connector shall have a minimum limit of 113 volts.

The series of runs given in Figure A-27 through A-30 (Cases C1 to C4) consider the steady state requirement. The load changes considered are: Case C1 - 100 amperes, 0.8-power-factor; Case C2 - 150 amperes, 0.8-power-factor; Case C3 - 200 amperes, 0.8-power-factor; and Case C4 - 250 amperes, 0.8-power-factor.

These figures indicate that the total current load on a feeder cable is a factor in determining the maximum load which can be switched and still meet the steady state requirement. Refer to Table A-1. The results show that with a 10,000-foot feeder cable length having five unit-loaded utilization service assemblies with a total 500-ampere 0.8-power-factor load, no other step loads should be applied. However, if three unit-loaded utilization service assemblies are on the cable feeder with a 300-ampere 0.8-power-factor load, than a 200-ampere 0.8-power-factor step load can be applied through a fourth utilization service assembly on the same feeder.

4.3 Transient Effects. Transient runs were made with different initial loads and different passive-element step loads to investigate the maximum load changes on the system that will not have adverse results on the system or on other loads with voltage regulation at the generator terminal. The system has one utilization service assembly with a 100-ampere 0.8-power-factor load. Step loads of 100, 200, and 300 amperes are applied to bus 7. Figures A-13, A-16, and A-31 through A-34 show the voltage results for step loads. Transient and steady-state requirements are met when the design follows the guidelines.

4.4 Motor-Starting Effects. A series of runs was made to investigate the maximum load allowed on the feeder when the induction motor was started. The characteristic of the induction motor is 250-ampere inrush at 0.26-power-factor when starting. The time to start was a little over 100 milliseconds.

Each series of runs has the steady state initial conditions as shown on Figures A-35 through A-38. In each case, the step load is the induction motor starting at bus 7.

4.5 Results. These figures indicate that the maximum loads on the system are limited by the steady state voltage requirements. The figures indicate no transient voltage problems exist, but that the steady state voltages at the aircraft connector are well below the 113-volt minimum requirements.

Transient voltages can be coupled to other feeder cables through the transient and subtransient reactances of the generator. This transient voltage coupled between feeders is less than 4 percent with a 100-ampere, 0.8-power-factor load and is linear for larger loads. Therefore, the coupling between the feeder circuits should not have any adverse effects on the loads of other feeders on the system.

When the voltage is regulated at the high side of the frequency conversion assembly transformer (4,160 volts), the voltage should remain constant in the steady state condition. Only transient voltages will couple to other feeder cable circuits.

Case Condition: Load change variations; aircraft cable effects not analyzed. Parameters are 15,000-foot feeder cable length and 80-foot service cable length.

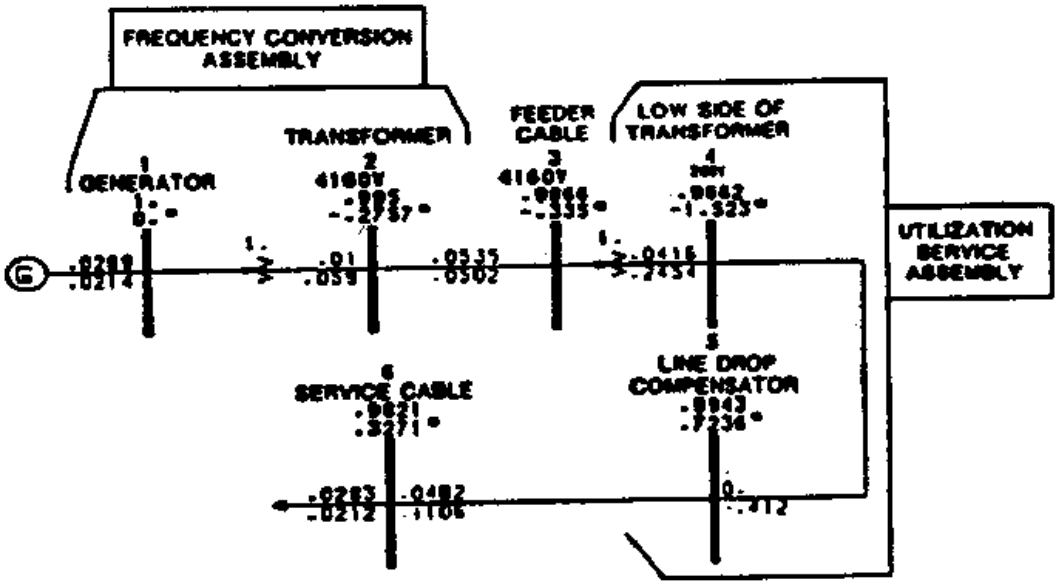

Figure A-27
100-Ampere Load Change - Case C1

Case Condition: Load change variations; aircraft cable effects not analyzed. Parameters are 15,000-foot feeder cable length and 80-foot service cable length.

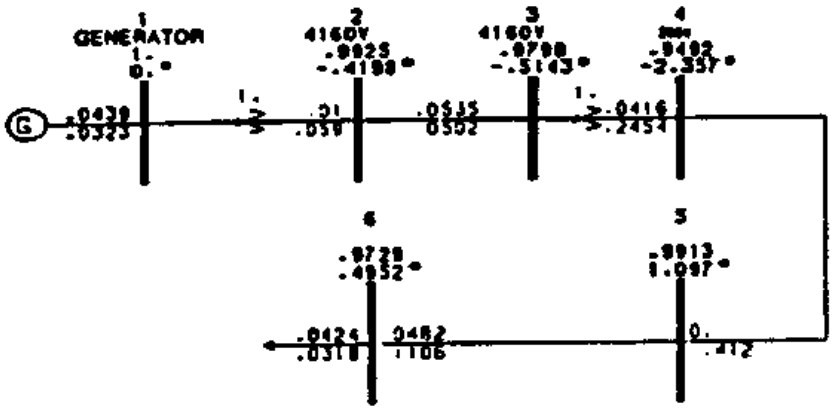

Figure A-28
150-Ampere Load Change - Case C2

Case Condition: Load change variations; aircraft cable effects not analyzed. Parameters are 15,000-foot feeder cable length and 80-foot service cable length.

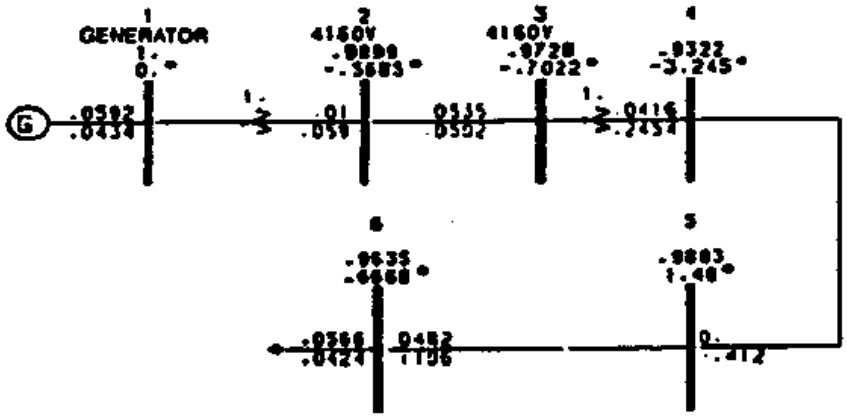

Figure A-29
200-Ampere Load Change - Case C3

Case Condition: Load change variations; aircraft cable effects not analyzed. Parameters are 15,000-foot feeder cable length and 80-foot service cable length.

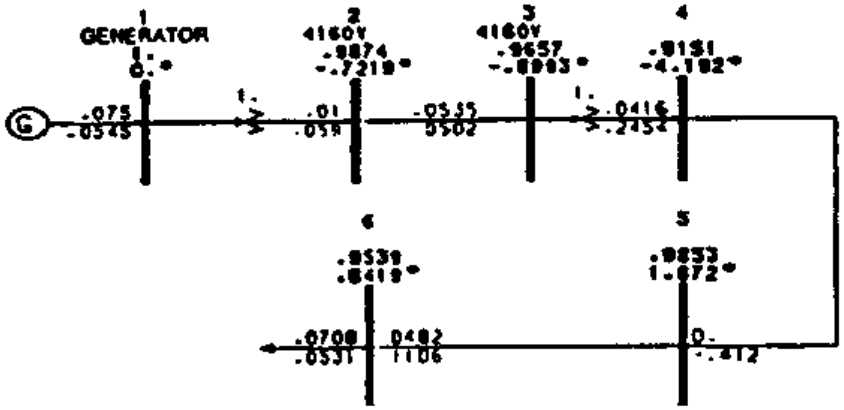

Figure A-30
250-Ampere Load Change - Case C4

Condition: Fixed cable lengths with initial and fixed stepped-load variations. Parameters are 15,000-foot feeder cable length, 200-foot service cable length, 40-foot aircraft cable length, and 100-ampere, 0.8-power-factor unit loads.

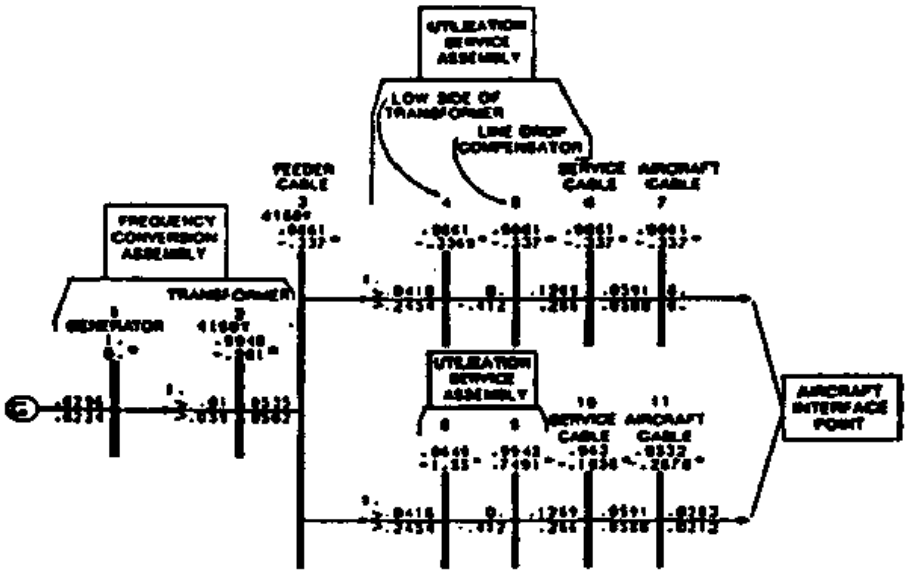

Figure A-31
Initial One-Unit Load Plus Stepped Two-Unit Load

Condition: Fixed cable lengths with initial and fixed stepped-load variations. Parameters are 15,000-foot feeder cable length, 200-foo service cable length, 40-foot aircraft cable length, and 100-ampere, 0.8-power-factor unit loads.

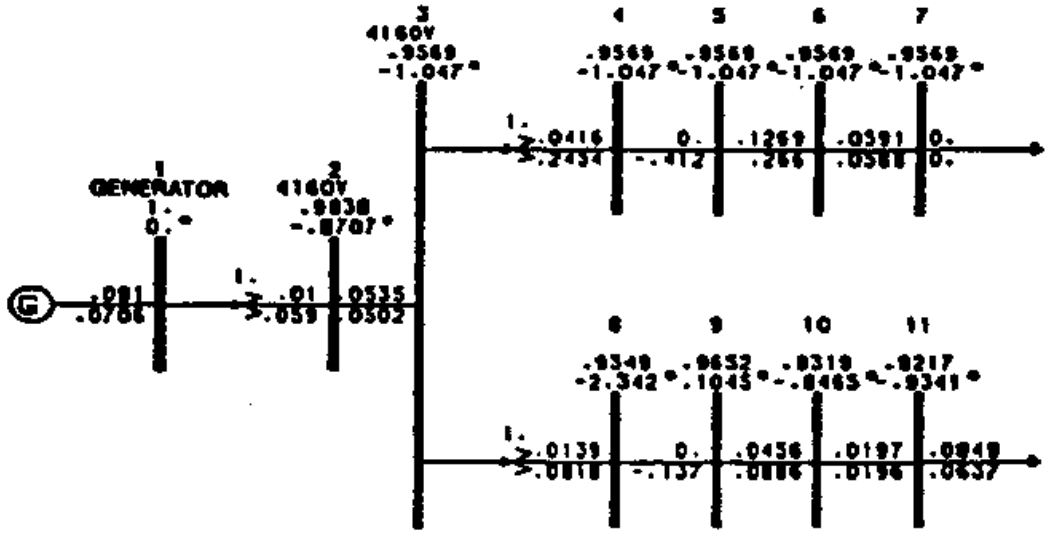

Figure A-33
Initial Three-Unit Load Plus Stepped Two-Unit Load

Condition: Fixed cable lengths with initial and fixed stepped-load variations. Parameters are 15,000-foot feeder cable length, 200-foot service cable length, 40-foot aircraft cable length, and 100-ampere, 0.8-power-factor unit loads.

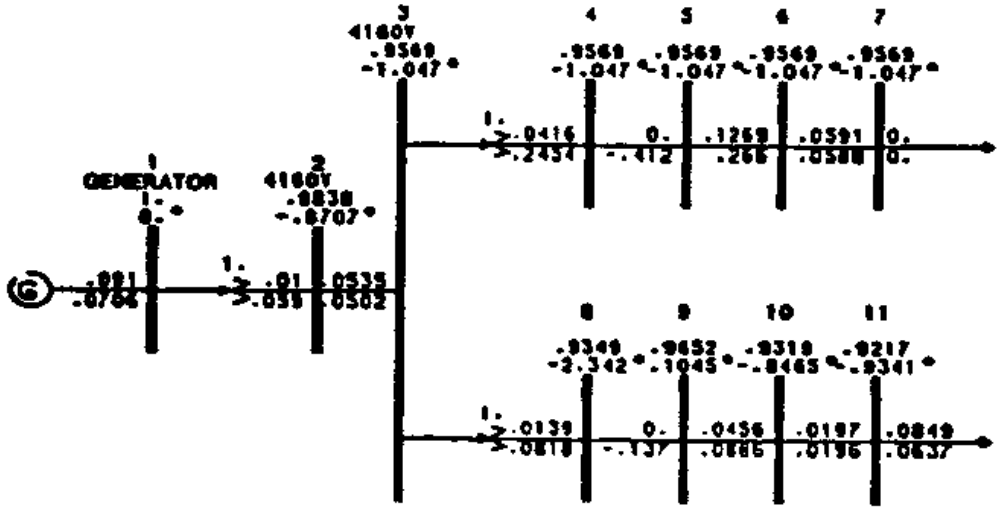

Figure A-34
Initial Three-Unit Load Plus Stepped Three-Unit Load

Condition: Fixed cable lengths with initial load variations and fixed induction motor starting. Parameters are 15,000-foot feeder cable length, 200-foot service cable length, 40-foot aircraft cable length, 100-ampere, 0.8-power-factor unit loads, and 250-ampere, 0.26-power-factor motor inrush.

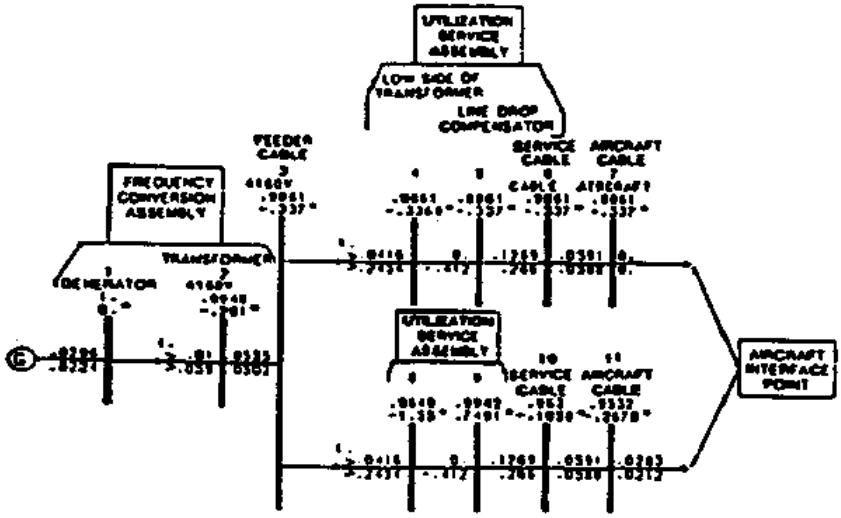

Figure A-35
Initial One-Unit Load Plus Induction Motor Starting

Condition: Fixed cable lengths with initial load variations and fixed induction motor starting. Parameters are 15,000-foot feeder cable length, 200-foot service cable length, 40-foot aircraft cable length, 100-ampere, 0.8-power-factor unit loads, and 250-ampere, 0.26-power-factor motor inrush.

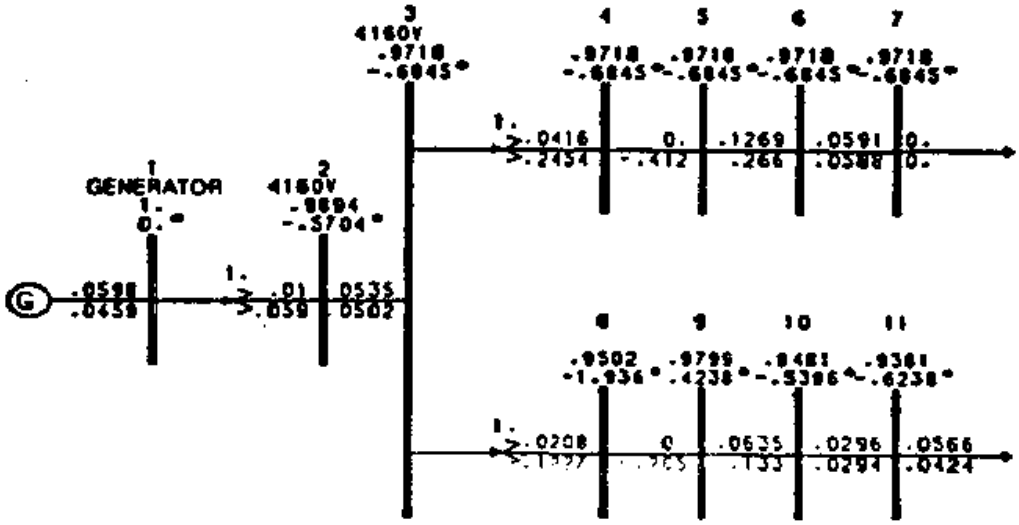

Figure A-36
Initial Two-unit Load Plus Induction-Motor Starting

Condition: Fixed cable lengths with initial load variations and fixed induction motor starting. Parameters are 15,000-foot feeder cable length, 200-foot service cable length, 40-foot aircraft cable length, 100-ampere, 0.8-power-factor unit loads, and 250-ampere, 0.26-power-factor motor inrush.

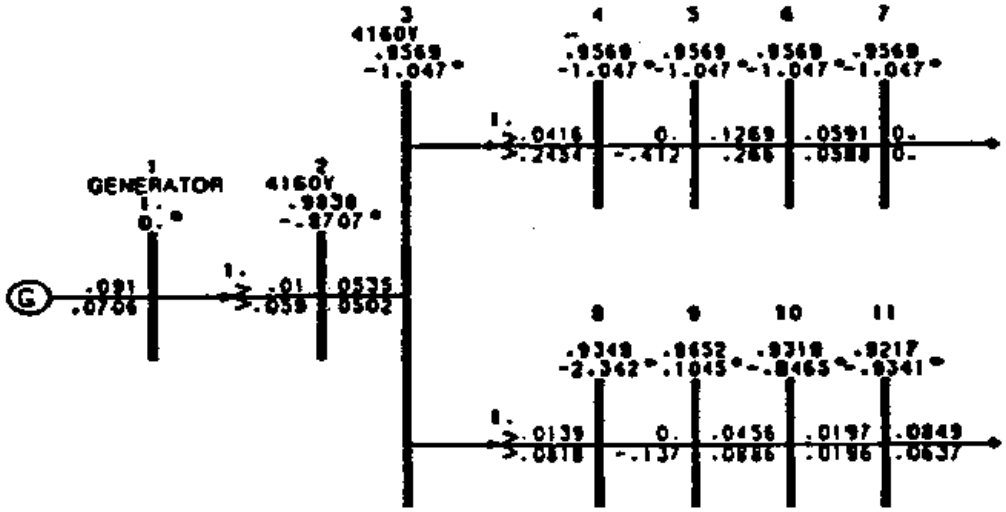

Figure A-37
Initial Three-unit Load Plus Induction-Motor Starting

Condition: Fixed cable lengths with initial load variations and fixed induction motor starting. Parameters are 15,000-foot feeder cable length, 200-foot service cable length, 40-foot aircraft cable length, 100-ampere, 0.8-power-factor unit loads, and 250-ampere, 0.26-power-factor motor inrush.

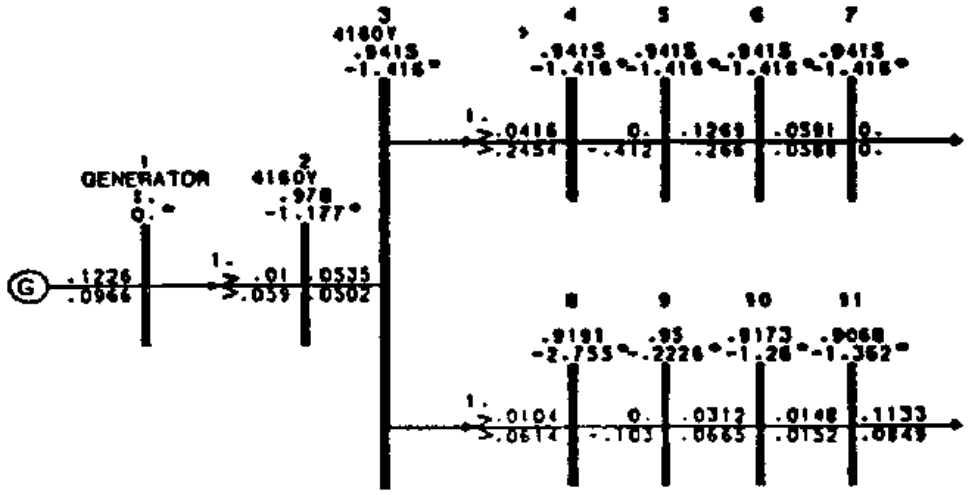

Figure A-38
Initial Four-Unit Load Plus Induction-Motor Starting

Section 5: USE OF 2,400-VOLT FEEDER CABLE

5.1 Advantages. The use of a 2,400-volt system has no great advantage over the use of a 4,160-volt system.

5.2 Disadvantages. The disadvantages of the 2,400-volt system are indicated by its decreased kVA capacity when compared to that of the 4,160-volt system. See Figure A-39 which is based on the impedance values given in Table A-6. The per-unit values of impedance for the 4,160- and 2,400-volt feeder cables can be related to feeder cable length. From such a relationship, the per-unit values for the 2,400-volt feeder cable for a given length are equal to the per-unit values of a 4,160-volt feeder cable three times as long. Any cable parameters selected will give the same relationship.

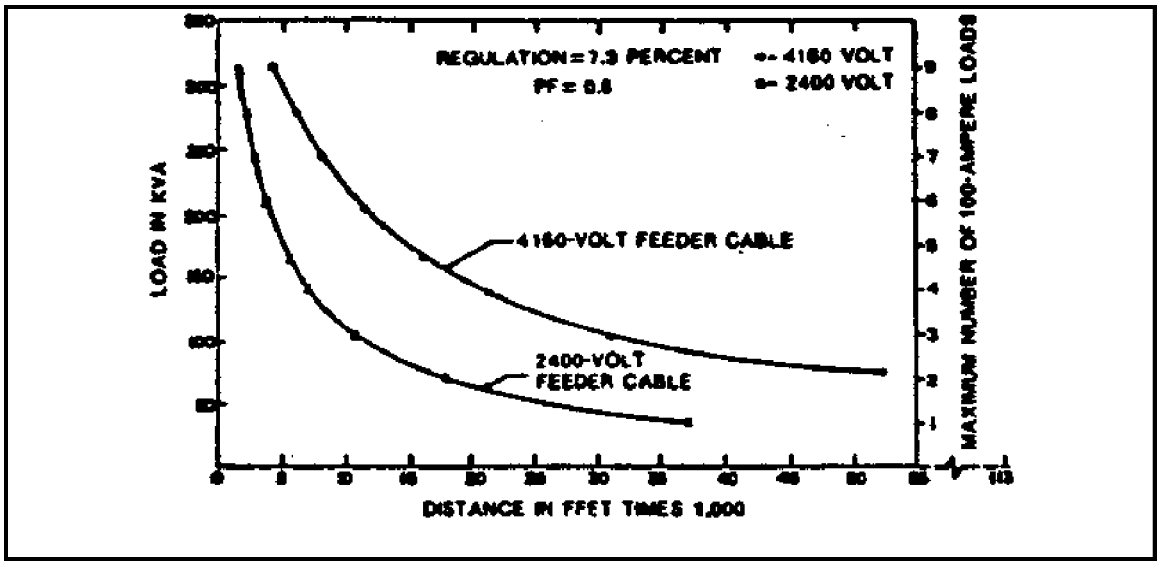

Figure A-39
Comparison of Feeder-Load Capacity at Different Voltage Levels

Table A-6
Per-Unit Impedance Values Versus Feeder-Cable Lengths (1)

Feeder Cable Length Feet	Feeder Cable Impedance Ohms	4,160-Volt Cable Per-Unit Value at 312 kVA, 118 Volt 1.n-	2,400-Volt Cable Per-Unit Value at 312 kVA, 118 Volt 1.n-
1,000	0.198 + j0.197	0.00357 + j0.00355	0.0107 + j0.0107
5,000	0.99 + j0.985	0.0178 + j0.0177	0.0536 + j0.0534
10,000	1.980 + j1.907	0.0357 + j0.0355	0.107 + j0.107
20,000	3.96 + j3.94	0.0714 + j0.0710	0.214 + j0.213
30,000	5.94 + j5.91	0.107 + j0.106	0.322 + j0.32
40,000	7.92 + j7.88	0.143 + j0.142	0.429 + j0.427

(1) No. 2-AWG, three-conductor cable has an impedance of 0.198 + j0.197 ohms per 1,000 feet

Section 6: PASSIVE-ELEMENT FILTERS

6.1 Requirement. Passive-element filters are installed to reduce equipment- and system-generated harmonics.

6.2 Harmonic Distortion. Harmonic distortion is an undesired change in a wave form. Total harmonic distortion (THD) provides an indication of the harmonic content of an alternating-current wave. It is expressed as a percent of the fundamental or:

$$THD = 100\ (E_h/E_f)1/2$$

where,

E_h = Sum of the squares of the amplitudes of all harmonics
E_f = Square of the amplitude of the fundamental

6.3 Equipment Providing Unacceptable THD. MIL-STD-704 requires that the THD of the wave form supplying the aircraft shall not exceed 5 percent. The analyses indicate that only nonlinear loads, such as large Avionics Test Equipment (ATE) full-wave rectifier bridge loads, provide distortion exceeding the 5-percent limitation.

6.4 Harmonic Distortion Reduction. Usually, filters of three elements or less can reduce the harmonic distortion level to criteria limits when the filters are located at or near the nonlinear loads. Three filter sections will usually reduce the distortion sufficiently. More filtering may further reduce the distortion factor, but the reduction may not be cost-effective.

A three-section passive-element filter that has been used for this purpose has the parameters indicated in Figure A-40.

6.5 Resonant Frequency Impacts. For the filter on Figure A-40, voltage will peak at frequencies where series resonance occurs. Damaging voltage may result when the resonant frequency is equal to or close to a harmonic frequency. Therefore, when passive-element filters are introduced as part of the system, a thorough study must be made to ensure that resonant frequencies of the passive-element filter do not fall on a harmonic of the power frequency that will be present in an amplitude significant enough to produce a damaging voltage.

6.6 Resonant Frequency Analysis. The resonant frequencies depend on the connected system elements and their values. A computer analysis can be made to determine the effects of the important parameters, such as the following:

a) The magnitude and power factor of the load;
b) The setting of the line drop compensator;
c) The impedance of the utilization service assembly transformer;
d) The amount of filter sections used;

e) The location of the filter in the system;
f) The effect of other utilization service assemblies;
g) The length of the 4,160-volt feeder cable.

6.7 Example of a Resonant Frequency Analysis. Resonant frequencies and the resulting THD were analyzed for the two cases shown on Figure A-41. The results of the computer study are given in Table A-7 which indicates that one filter element reduces the system THD of Case 2, the two-rectifier load, from 5.4 percent to 3.5 percent. For Case 1, the one-rectifier load, the reduction still exceeds the 5 percent limitation and additional analyses must be made.

Table A-7
Resonant Frequencies and Harmonic Voltages

Case	Parallel	Series	Parallel	Series
1	550	3,200	3,720	3,950
2	740	3,050	3,600	4,100

	Harmonic Voltage Magnitudes						
	3	5	7	9	11	13	THD
Case	First Filter Section Per-Unit Volts						
1	0.70	0.84	1.60	0.44	0.72	0.14	
2	0.09	0.32	1.52	0.61	1.05	0.50	
Condition	Percent Volts						
Unfiltered	0.2	5.0	2.0	0.1	0.5	0.2	5.4
Case - 1	0.14	4.2	3.2	0.04	0.36	0.03	5.3
Case - 2	0.02	1.6	3.0	0.06	0.53	0.10	3.5

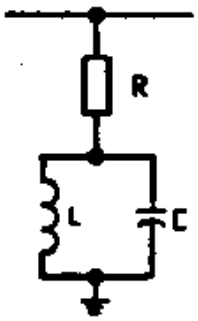

SECTION	R OHMS	L MILLIHENRIES	C MICROFARADS
1	0.25	0.88	180
2	0.25	0.84	180
3	0.25	1.06	140

Figure A-40
Three-Section Passive-Element Filter

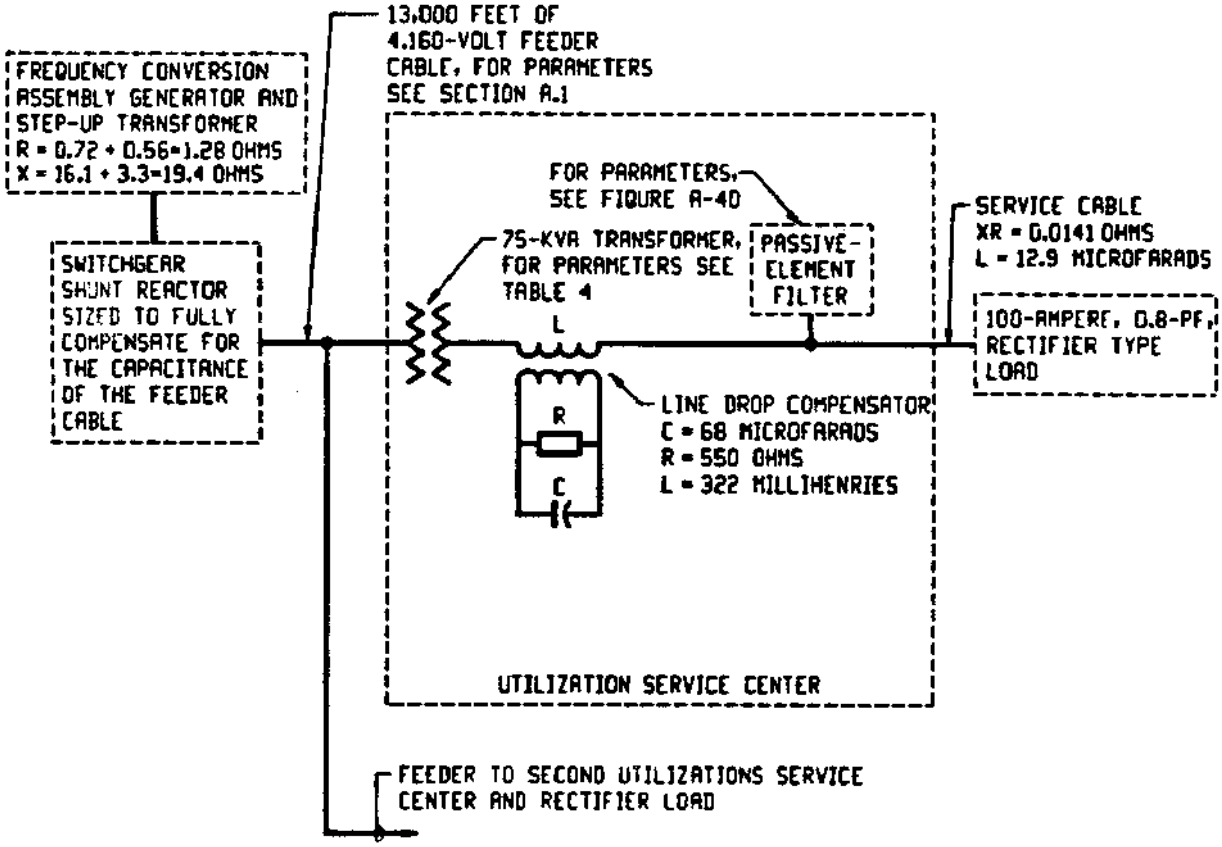

Figure A-41
System Connection for One (Case 1) or Two (Case 2) Rectifier-Type Unit Loads

Section 7: SURGE SUPPRESSION

7.1 Surge Protection at the Medium-Voltage Level. Surge arresters are commercially available for both 60- and 400-Hz voltages. The insulation capability of the equipment must be coordinated with the sparkover values of the arresters.

Conventional silicon-carbide arresters have a spark gap in series with the silicon-carbide blocks. Therefore, the application at 400 Hz should not be a problem, since no current is conducted until the arrester sparks over. The lowest rating available is 3 kilovolt, RMS, with a corresponding switching surge sparkover voltage of 8.25 kV, 1.95 per unit of rated arrester, crest voltage. The next higher rating is 4.5 KV RMS with a sparkover voltage of 12.4 kV (1.95 per unit).

Metal-oxide arresters have similar characteristics. The smallest arrester has a rating of 2.7 kV RMS, and a protective level of 5.6 kV. A 4.5-kV RMS rated arrester has a protective level of 9.2 kV. These arresters have been tested for 60-Hz application. No tests have been performed, and no information is available for 400-Hz application. For a 4,160-volt system, the nominal line-ground peak voltage is 3.39 kV, and therefore, the arrester sparkover voltage of 9.2 kV is 2.71 times the nominal voltage.

7.2 Protection at the 120-Volt Level. The MIL-SPEC-704 requirement for a 400-Hz system limits the maximum voltage to less than 180 volts RMS or 1.5 per unit of the nominal 120-volt rating. As discussed previously, the protective levels of silicon-carbide or metal-oxide arresters on the 4,160-volt systems are significantly higher, and therefore, they could not limit voltage to the 1.5 per-unit level as required. For this reason, 4,160-volt surge protection shall not be used to protect the load circuits on the 120-volt level.

Protection of the 120-volt system can be accomplished with either varistors or zener-type suppressors. The lowest rating of varistors for industrial use is 130-volt RMS. With a 10-ampere current through the varistor, a typical clamping voltage is 1.7 per unit of rated peak voltage. The clamping voltage is the voltage where the limit occurs. For a varistor rated 130 volts, the clamping voltage is 312 volts. Criteria require that the voltage is limited to 180 volts times the square root of 2 or 255 volts. Varistors are not suited for this application since their clamping voltage is 312 volts.

The catalogs for zener-type suppressors give limited information on the capability of the devices. Only at the maximum values of current is the voltage given, and that voltage is approximately 1.56 per unit of nominal peak voltage. One manufacturer has indicated that at 10-ampere current, a clamping voltage of approximately 1.35 per unit of nominal peak voltage can be accomplished.

Adding a zener-type suppressor can limit some of the transient spikes which exist on the 118-volt system. Recordings of tests show that spikes of approximately 260- to 270-volt crest were recorded. These spikes could be reduced by the use of zener-type suppressors.

These observed spikes of 1.55 to 1.62 per unit of system peak voltage pose no danger to the distribution equipment. Most of the 118-volt equipment such as cables, rectifiers, etc., have an insulation capability of at least 2.5 per unit. This applies similarly to all the 4,160-volt equipment.

If the apparatus used in the 400-Hz system is not able to withstand these 1.6-per-unit spikes, it is more cost-effective to provide extra surge protection at the terminals of the apparatus than it is to add surge suppressors at all utilization service assemblies. With zener-type suppressors, the voltage could be clamped to approximately 1.38 per unit. Slightly higher voltages could be expected if the discharge current is above 10 amperes. This assumes that all the zener-type suppressors have the same clamping voltages. Usually the tolerances are between 5 and 15 percent. If a 15-percent tolerance increases the clamp voltage to 1.58 per unit, then the zener-type suppressors are not effective in limiting spikes with a magnitude of 1.6 per unit.

For this reason, varistors shall not be used to limit the voltage for protection at the 120-volt level. For 400-Hz equipment which is sensitive to voltage spikes of approximately 1.5 times normal voltage, zener-type suppressors (with very low tolerance) shall be installed on the terminals of that equipment.

Section 8: RELIABILITY AND AVAILABILITY OF 400-HERTZ SYSTEMS

8.1 Requirement. The continuous operation of loads served by the 400-Hz generation system is essential.

8.2 Discussion. The coupling effect between feeder cables will be reduced by a factor of two when two generators are operating in parallel. The effective impedance that couples the transient voltage between feeders comes from each operating generator's transient reactance and the impedance of each generator's step-up transformer. When a transient occurs, the change in voltage at the generator transformer's 4,160-volt side is coupled to all feeder cables. For one generator in operation, the percent voltage coupling to feeder cables is less than 4 percent for a 100-ampere load transient. When two generators are operating, the percent-voltage coupling is less than 2 percent for the same load transient.

8.3 Central Plant Design. Centralized 400-Hz power systems shall be designed for parallel operation of all generators with automatic startup of each generator as the load increases enough to demand it. Such operation provides increased reliability and availability of 400-Hz power over that of a system which dedicates one generator to a feeder.

8.4 Distribution System Design. Frequent switching of many large power loads causes transient voltage oscillations. Oscillations must be limited to MIL-STD-704 requirements. The distribution system must also be designed to carry each feeder cable's demand load without exceeding steady state requirements.

APPENDIX B
ANALYSIS OF 400-HERTZ LOW VOLTAGE DISTRIBUTION SYSTEM

Section 1: VOLTAGE DROP CALCULATIONS

1.1 General. This section is devoted to determining voltage drops for 400-Hz low voltage distribution systems. The circuit diagram and formulas presented in Figure B-1 will be used in this section for determining system voltage drops.

Figure B-2 illustrates a typical 400-Hz distribution system which will be used as the bases for determining the appropriate size of low voltage feeder and frequency converter.

A simplified block diagram with the equipment and cable parameters are presented in Figure B-3 for the system shown in Figure B-2. Figures B-4 and B-5 illustrate the calculations based on the parameters given in Figure B-3.

Tables B-1 through B-12 are reprinted from "Actual Specifying Engineer," February 1972. These tables give the effective A.C. resistance and inductance values for both copper and aluminum conductors for various insulations and routing medians.

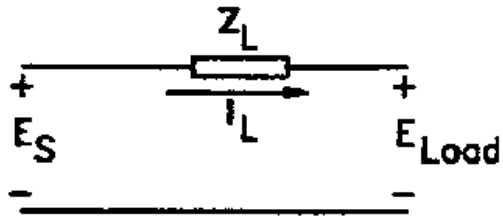

E_S – Source Voltage=208Y/120

E_{Load} – Load Voltage

I_L – Line Current

Z_L – Line Impedence=$R_{ac}+jwL$

R_{ac} – Alternating Current Resistance

L – Inductance

w – Angular Frequency=2 x 3.14 x frequency

SIMPLIFIED CIRCUIT DIAGRAM

FORMULAS

$E_S = I_L Z_L + E_{Load}$

$E_{Load} = E_S - I_L Z_L$

Line–to–Neutral Voltage Drop= $|E_S| - |E_{Load}| = I_L\ |Z_L|$

Line–to–Line Voltage Drop=$\sqrt{3}(|E_S| - |E_{Load}|) = \sqrt{3}\ I_L\ |Z_L|$

NOTE: FORMULAS USING PER UNIT QUANTITIES ARE ALSO ACCEPTABLE PROVIDED ALL INFORMATION IS INCLUDED IN THE CALCULATIONS.

Figure B-1
Simplified Circuit Diagram and Formulas

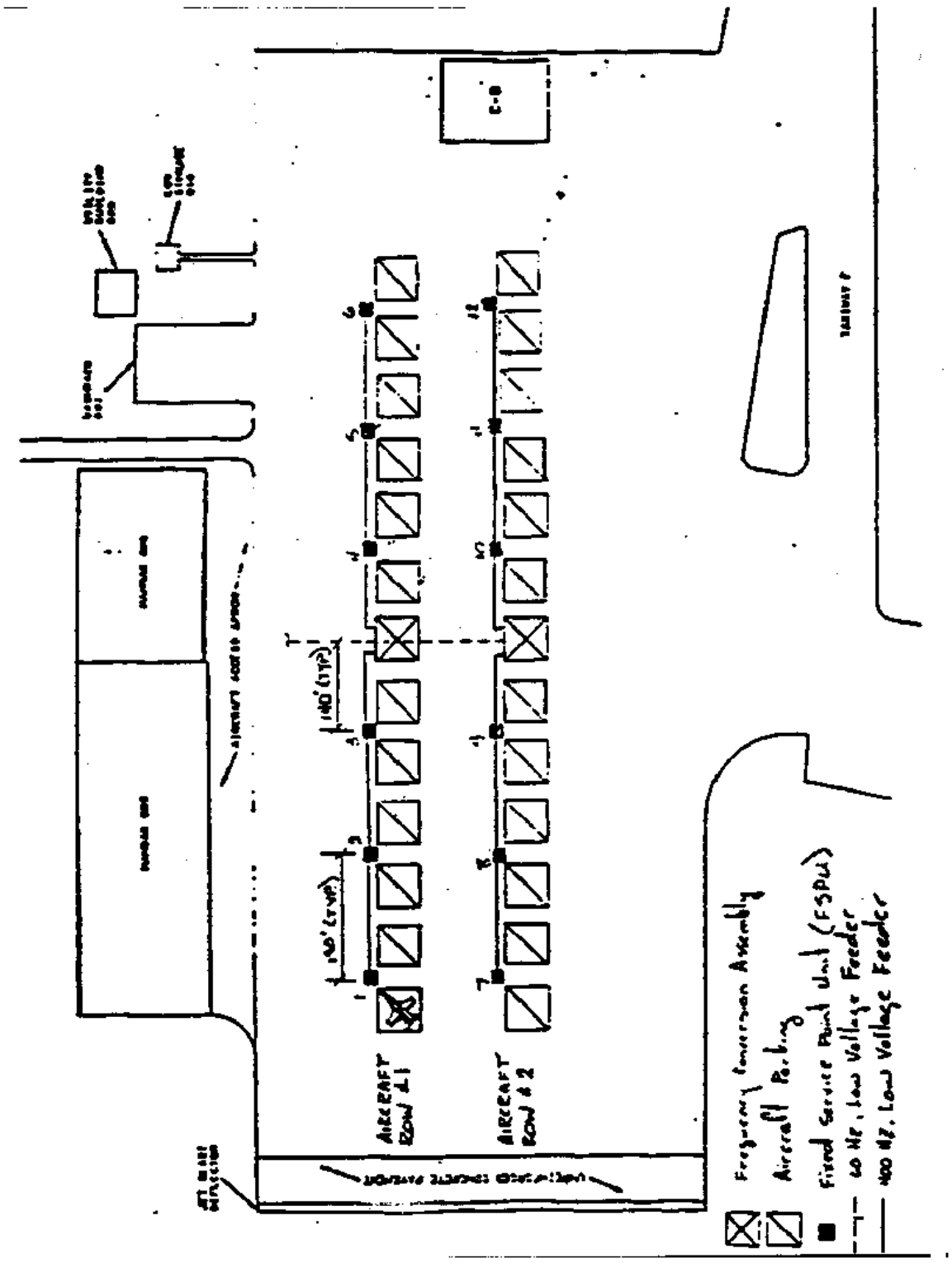

Figure B-2
Typical 400-Hz Low-Voltage Distribution System

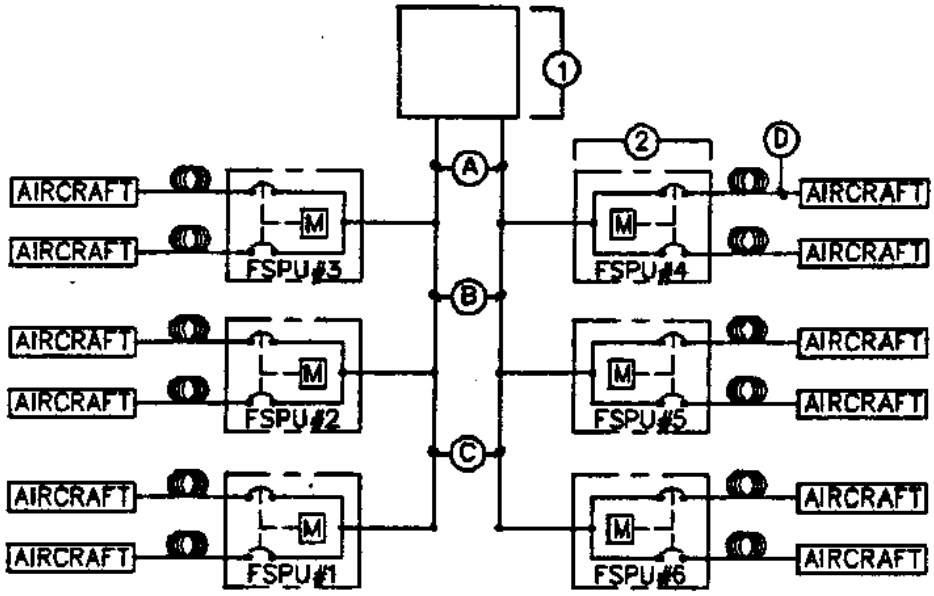

BLOCK DIAGRAM

EQUIPMENT

(1) Frequency Conversion Assembly (FCA)

(2) Fixed Service Point Unit (FSPU) w/ Breaker and Power Monitor

CABLE

(A) 400-Hertz, Low-Voltage Feeder (A)=140 ft.

(B) 400-Hertz, Low-Voltage Feeder (B)=(C)=190 ft.

(D) 400-Hertz, Aircraft Service Cable, Maximum Length=60 Feet, except as approved by NAVFACENGCOM

LOAD CALCULATIONS

Assume Aircraft Connected Load=10kVA
Note: Reference Table 1 for aircraft load data

Demand @ 50% per Table 2

Demand=10kVA x 12 x .50=60kVA

Therefore minimum size of frequency conversion assembly=60 kVA

CABLE CALCULATIONS

Assumptions:
Service Cable-1/0 Copper, 3-Conductor
-Type THHN Insulation
-Routing Median-Air
Feeder Cable
Case No. 1-4/0 Copper, 1-Conductor Cable
-Type THHN Insulation
-Routing Median-Aluminum Conduit
Case No. 2-4/0 Copper, 3-Conductor Cable
-Type THHN Insulation
-Routing Median-Aluminum Conduit
Case No. 3-#1 Copper, 1-Conductor Cable, Parallel Feed
-Type THHN Insulation
-Routing Median-Aluminum Conduit
Case No. 4-#1 Copper, 3-Conductor Cable, Parallel Feed
-Type THHN Insulation
-Routing Median-Aluminum Conduit

Figure B-3
Typical 400-Hz Low-Voltage System

MINIMUM VOLTAGE REQUIRED AT AIRCRAFT = 113 VOLTS
THERFORE MAXIMUM VOLTAGE DROP ALLOWED = 120 − 113 = 7 VOLTS

SERVICE CABLE : LOAD = 10kVA
I_L = 27.8 AMP
R_{ac} = 135.73 microohms/ft. x 60 ft. = 8143.8 microohms
L = 0.07359 microhenries/ft. x 60 ft. = 4.4 microhenries
Z_L = 8143.8 microohms + j (2512)(4.4 microhenries)
Z_L = .0081 ohms + j .0111 ohms
$|Z_L|$ = .0137

Voltage Drop (VD) = 27.8 (.0137) = .38 Volts

FEEDER CABLE :

CASE No. 1

CABLE	LENGTH (ft.)	LOAD (kVA)	I_L (AMP)	R_{ac} (microohms)	L (micro H)	$\|Z_L\|$ (ohms)	VD (volts)
FSPU#1 To FSPU#2	190	20	55.5	16121.5	18.4	.0490	2.72
FSPU#2 To FSPU#3	190	40	111.0	16121.5	18.4	.0490	5.44
FSPU#3 To FCA	140	60	166.5	11879.0	13.9	.0369	6.14

Total Voltage Drop = .38 + 2.72 + 5.44 + 6.14 = 14.68 volts

CASE No. 2

CABLE	LENGTH (ft.)	LOAD (kVA)	I_L (AMP)	R_{ac} (microohms)	L (micro H)	$\|Z_L\|$ (ohms)	VD (volts)
FSPU#1 To FSPU#2	190	20	55.5	16132.9	13.3	.0371	2.06
FSPU#2 To FSPU#3	190	40	111.0	16132.9	13.3	.0371	4.12
FSPU#3 To FCA	140	60	166.5	11887.4	9.8	.0273	4.55

Total Voltage Drop = .38 + 2.06 + 4.12 + 4.55 = 11.11 volts

CASE No. 3

CABLE	LENGTH (ft.)	LOAD (kVA)	I_L (AMP)	R_{ac} (microohms)	L (micro H)	$\|Z_L\|$ (ohms)	VD (volts)
FSPU#1 To FSPU#2	190	20	27.8	31285.4	20.0	.0592	1.53
FSPU#2 To FSPU#3	190	40	55.5	31285.4	20.0	.0592	3.29
FSPU#3 To FCA	140	60	83.3	23052.4	14.8	.0437	3.64

Total Voltage Drop = .38 + 1.53 + 3.29 + 3.64 = 8.84 volts

Figure B-4
400-Hz Voltage Drop Calculations

FEEDER CABLE CONTINUED:

CASE No. 4

CABLE	LENGTH (ft.)	LOAD (kVA)	I_L(AMP)	R_{ac} (microohms)	L (micro H)	$\lvert Z_L \rvert$ (ohms)	VD (volts)
FSPU#1 To FSPU#2	190	20	27.8	31289.2	14.3	.0476	1.32
FSPU#2 To FSPU#3	190	40	55.5	31289.2	14.3	.0476	2.64
FSPU#3 To FCA	140	60	83.3	23055.2	10.5	.0350	2.92

Total Voltage Drop = .38 + 1.32 + 2.64 + 2.92 = 7.26 volts

A voltage drop of 7.26 volts is an acceptable value. Therefore the use of a parallel set of three (3) conductor #1 cable will suffice for this example.

Figure B-5
400-Hz Voltage Drop Calculations (Continued)

TABLE B-1
EFFECTIVE A.C. RESISTANCE AND INDUCTANCE VALUES FOR THW, RHW COPPER SINGLE CONDUCTORS AT 400 HZ
(R_{ac} =microhms per ft., L = microhenries per ft.)

Wire Size	In Air		Non-metallic Conduit		Rigid Alum. Conduit		Rigid Steel Conduit		Elec. Metallic Tubing		Steel Cable Tray		Aluminum Cable Tray		Ampacity Derating Factor Steel Conduit
	R_{ac}	L	R_{ac}	L	R_{ac}	L	R_{ac}	L	R_{ac}	L	R_{ac}	L	R_{ac}	L	
#12	1970.38	0.11708	1970.38	0.14050	1970.38	0.14050	1971.21	0.17562	1971.21	0.17562	1971.21	0.20489	1970.38	0.14050	0.99
#10	1240.82	0.11034	1240.82	0.13241	1240.82	0.13241	1242.15	0.16552	1242.15	0.16552	1242.15	0.19311	1240.82	0.13241	0.99
#8	781.33	0.11078	781.33	0.13293	781.33	0.13293	783.29	0.16617	783.29	0.16617	783.29	0.19386	781.33	0.13293	0.99
#6	492.52	0.10570	492.52	0.12684	492.53	0.12684	496.14	0.15855	496.14	0.15855	496.14	0.18498	492.53	0.12684	0.99
#4	314.44	0.09534	314.44	0.11441	314.45	0.11441	320.09	0.14301	320.09	0.14301	320.09	0.16685	314.45	0.11441	0.98
#2	197.50	0.09556	197.50	0.11467	197.51	0.11467	201.14	0.14334	201.14	0.14334	201.14	0.16723	197.51	0.11467	0.96
#1	162.95	0.09469	162.95	0.11363	162.95	0.11363	172.15	0.14204	172.15	0.14204	172.15	0.16572	162.95	0.11363	0.94
#1/0	133.63	0.09322	133.63	0.11186	133.64	0.11186	147.64	0.13983	147.64	0.13983	147.64	0.16313	133.64	0.11186	0.90
#2/0	112.98	0.09092	112.98	0.10910	112.99	0.10910	130.14	0.13638	130.14	0.13638	130.14	0.15911	112.99	0.10910	0.86
#3/0	94.74	0.08870	94.74	0.10644	94.74	0.10644	113.10	0.13305	113.10	0.13305	113.10	0.15523	94.74	0.10644	0.82
#4/0	82.04	0.08752	82.04	0.10502	82.05	0.10502	104.72	0.13128	104.72	0.13128	104.72	0.15316	82.05	0.10502	0.76
250MCM	73.65	0.08734	73.66	0.10480	73.66	0.10480	96.00	0.13101	96.00	0.13101	96.00	0.15284	73.66	0.10480	0.73
300MCM	67.60	0.08473	67.60	0.10168	67.60	0.10168	91.50	0.12710	91.50	0.12710	91.50	0.14828	67.60	0.10168	0.69
350MCM	61.52	0.08566	61.52	0.10280	61.53	0.10280	87.48	0.12850	87.48	0.12850	87.48	0.14991	61.53	0.10280	0.64
400MCM	58.85	0.08442	58.85	0.10131	58.85	0.10131	85.46	0.12663	85.46	0.12663	85.46	0.14774	58.85	0.10131	0.61
500MCM	52.34	0.08231	52.34	0.09877	52.34	0.09877	78.90	0.12347	78.90	0.12347	78.90	0.14405	52.34	0.09877	0.57
750MCM	42.25	0.08075	42.25	0.09690	42.25	0.09690	67.42	0.12112	67.42	0.12112	67.42	0.14131	42.25	0.09690	0.50
1000MCM	36.25	0.07947	36.25	0.09537	36.25	0.09537	59.71	0.11921	59.71	0.11921	59.71	0.13906	36.25	0.09537	0.46

NOTE – THIS TABLE WAS REPRINTED FROM THE 1972 FEBRUARY EDITION OF ACTUAL SPECIFYING ENGINEER

TABLE B-2
EFFECTIVE A.C. RESISTANCE AND INDUCTANCE VALUES FOR
XHHW COPPER SINGLE CONDUCTORS AT 400 HZ
(R_{ac} =microhms per ft., L = microhenries per ft.)

Wire Size	In Air		Non-metallic Conduit		Rigid Alum. Conduit		Rigid Steel Conduit		Elec. Metallic Tubing		Steel Cable Tray		Aluminum Cable Tray		Ampacity Derating Factor Steel Conduit
	R_{ac}	L	R_{ac}	L	R_{ac}	L	R_{ac}	L	R_{ac}	L	R_{ac}	L	R_{ac}	L	
#12	1970.48	0.10499	1970.48	0.12599	1970.48	0.12599	1971.30	0.15749	1971.30	0.15749	1971.30	0.18374	1970.48	0.12599	0.99
#10	1241.03	0.09928	1241.03	0.11911	1241.03	0.11911	1242.45	0.14889	1242.45	0.14889	1242.45	0.17370	1241.03	0.11911	0.99
#8	781.58	0.10251	781.58	0.12302	781.58	0.12302	783.74	0.15377	783.74	0.15377	783.74	0.17940	781.58	0.12302	0.99
#6	492.95	0.09898	492.95	0.11875	492.96	0.11875	496.98	0.14844	496.98	0.14844	496.98	0.17318	492.96	0.11875	0.99
#4	315.13	0.09500	315.13	0.11401	315.14	0.11401	321.81	0.14251	321.81	0.14251	321.81	0.16628	315.14	0.11401	0.98
#2	197.98	0.09070	197.98	0.10884	197.99	0.10884	202.39	0.13605	202.39	0.13605	202.39	0.15873	197.99	0.10884	0.97
#1	164.30	0.08918	164.30	0.10701	164.31	0.10701	175.34	0.13377	175.34	0.13377	175.34	0.15606	164.31	0.10701	0.93
#1/0	135.26	0.08798	135.26	0.10558	135.28	0.10558	151.96	0.13197	151.96	0.13197	151.96	0.15397	135.28	0.10558	0.89
#2/0	115.04	0.08618	115.04	0.10341	115.05	0.10341	135.04	0.12927	135.04	0.12927	135.04	0.15081	115.05	0.10341	0.84
#3/0	96.05	0.08443	96.05	0.10131	96.85	0.10131	117.75	0.12684	117.75	0.12684	117.75	0.14775	96.85	0.10131	0.80
#4/0	84.28	0.08354	84.28	0.10024	84.29	0.10024	109.98	0.12531	109.98	0.12531	109.98	0.14619	84.29	0.10024	0.74
250MCM	76.17	0.08306	76.17	0.09967	76.18	0.09967	101.42	0.12459	101.42	0.12459	101.42	0.14536	76.18	0.09967	0.71
300MCM	70.07	0.08161	70.07	0.09793	70.07	0.09793	96.53	0.12241	96.53	0.12241	96.53	0.14281	70.07	0.09793	0.67
350MCM	63.88	0.08170	63.88	0.09804	63.89	0.09804	92.98	0.12255	92.98	0.12255	92.98	0.14297	63.89	0.09804	0.62
400MCM	61.15	0.08081	61.15	0.09698	61.15	0.09698	90.60	0.12122	90.60	0.12122	90.60	0.14143	61.15	0.09698	0.60
500MCM	54.39	0.07919	54.39	0.09503	54.39	0.09503	83.13	0.11879	83.13	0.11879	83.13	0.13859	54.39	0.09503	0.55
750MCM	43.70	0.07818	43.70	0.09381	43.70	0.09381	70.21	0.11727	70.21	0.11727	70.21	0.13681	43.70	0.09381	0.49
1000MCM	37.40	0.07727	37.40	0.09273	37.40	0.09273	61.92	0.11591	61.92	0.11591	61.92	0.13523	37.40	0.09273	0.45

NOTE – THIS TABLE WAS REPRINTED FROM THE 1972 FEBRUARY EDITION OF ACTUAL SPECIFYING ENGINEER

TABLE B-3
EFFECTIVE A.C. RESISTANCE AND INDUCTANCE VALUES FOR
THHN COPPER SINGLE CONDUCTORS AT 400 HZ
(R_{ac} =microhms per ft., L = microhenries per ft.)

Wire Size	In Air		Non-metallic Conduit		Rigid Alum. Conduit		Rigid Steel Conduit		Elec. Metallic Tubing		Steel Cable Tray		Aluminum Cable Tray		Ampacity Derating Factor Steel Conduit
	R_{ac}	L	R_{ac}	L	R_{ac}	L	R_{ac}	L	R_{ac}	L	R_{ac}	L	R_{ac}	L	
#12	1970.67	0.08946	1970.67	0.10736	1970.67	0.10736	1971.58	0.13420	1971.58	0.13420	1971.58	0.15656	1970.67	0.10736	0.99
#10	1241.24	0.09131	1241.24	0.10957	1241.24	0.10957	1242.80	0.13697	1242.80	0.13697	1242.80	0.15979	1241.24	0.10957	0.99
#8	781.92	0.09403	781.92	0.11284	781.93	0.11284	784.32	0.14105	784.32	0.14105	784.32	0.16456	781.93	0.11284	0.99
#6	493.49	0.09223	493.49	0.11067	493.50	0.11067	497.94	0.13834	497.94	0.13834	497.94	0.16140	493.50	0.11067	0.99
#4	315.37	0.09317	315.37	0.11181	315.38	0.11181	322.29	0.13976	322.29	0.13976	322.29	0.16306	315.38	0.11181	0.98
#2	198.15	0.08921	198.15	0.10705	198.15	0.10705	202.83	0.13382	202.83	0.13382	202.83	0.15612	198.15	0.10705	0.97
#1	164.66	0.08788	164.66	0.10546	164.66	0.10546	176.20	0.13182	176.20	0.13182	176.20	0.15380	164.66	0.10546	0.93
#1/0	135.68	0.08675	135.68	0.10410	135.70	0.10410	153.02	0.13013	153.02	0.13013	153.02	0.15182	135.70	0.10410	0.89
#2/0	115.56	0.08506	115.56	0.10208	115.57	0.10208	136.27	0.12760	136.27	0.12760	136.27	0.14886	115.57	0.10208	0.84
#3/0	97.38	0.08346	97.38	0.10015	97.38	0.10015	118.93	0.12519	118.93	0.12519	118.93	0.14606	97.38	0.10015	0.80
#4/0	84.83	0.08263	84.83	0.09916	84.85	0.09916	111.29	0.12395	111.29	0.12395	111.29	0.14461	84.85	0.09916	0.73
250MCM	76.68	0.08226	76.68	0.09872	76.68	0.09872	102.52	0.12340	102.52	0.12340	102.52	0.14396	76.68	0.09872	0.70
300MCM	70.57	0.08090	70.57	0.09708	70.57	0.09708	97.56	0.12136	97.56	0.12136	97.56	0.14158	70.57	0.09708	0.66
350MCM	64.35	0.08099	64.35	0.09719	64.36	0.09719	94.07	0.12149	94.07	0.12149	94.07	0.14174	64.36	0.09719	0.62
400MCM	61.60	0.08015	61.60	0.09618	61.61	0.09618	91.62	0.12023	91.62	0.12023	91.62	0.14027	61.61	0.09618	0.59
500MCM	54.79	0.07863	54.79	0.09436	54.79	0.09436	83.97	0.11795	83.97	0.11795	83.97	0.13761	54.79	0.09436	0.55
750MCM	43.98	0.07779	43.98	0.09335	43.98	0.09335	70.76	0.11669	70.76	0.11669	70.76	0.13613	43.98	0.09335	0.49
1000MCM	37.62	0.07684	37.62	0.09221	37.62	0.09221	62.35	0.11527	62.35	0.11527	62.35	0.13448	37.62	0.09221	0.45

NOTE – THIS TABLE WAS REPRINTED FROM THE 1972 FEBRUARY EDITION OF ACTUAL SPECIFYING ENGINEER

TABLE B-4
EFFECTIVE A.C. RESISTANCE AND INDUCTANCE VALUES FOR THW, RHW ALUMINUM SINGLE CONDUCTORS AT 400 HZ
(R_{ac} =microhms per ft., L = microhenries per ft.)

Wire Size	In Air		Non-metallic Conduit		Rigid Alum. Conduit		Rigid Steel Conduit		Elec. Metallic Tubing		Steel Cable Tray		Aluminum Cable Tray		Ampacity Derating Factor Steel Conduit
	R_{ac}	L	R_{ac}	L	R_{ac}	L	R_{ac}	L	R_{ac}	L	R_{ac}	L	R_{ac}	L	
#12	5040.98	0.11708	5040.98	0.14050	5040.98	0.14050	5042.59	0.17562	5042.72	0.17562	5042.59	0.20489	5040.98	0.14050	0.99
#10	2030.44	0.11034	2030.44	0.13241	2030.45	0.13241	2031.34	0.16552	2031.44	0.16552	2031.34	0.19311	2030.45	0.13241	0.99
#8	1280.82	0.11078	1280.82	0.13293	1280.82	0.13293	1282.17	0.16617	1282.32	0.16617	1282.17	0.19386	1280.82	0.13293	0.99
#6	805.66	0.10570	805.66	0.12684	805.66	0.12684	808.22	0.15855	808.50	0.15855	808.22	0.18498	805.66	0.12684	0.99
#4	507.77	0.09534	507.77	0.11441	507.77	0.11441	511.36	0.14301	511.83	0.14301	511.36	0.16685	507.77	0.11441	0.99
#2	322.85	0.09556	322.85	0.11467	322.85	0.11467	327.81	0.14334	327.84	0.14334	327.81	0.16723	322.85	0.11467	0.98
#1	257.80	0.09469	257.80	0.11363	257.80	0.11363	263.81	0.14204	263.88	0.14204	263.81	0.16572	257.80	0.11363	0.97
#1/0	206.72	0.09322	206.72	0.11186	206.73	0.11186	218.10	0.13983	219.04	0.13983	218.10	0.14313	206.73	0.11186	0.95
#2/0	168.82	0.09092	168.82	0.10910	168.82	0.10910	179.55	0.13638	179.90	0.13638	179.55	0.15911	168.82	0.10910	0.94
#3/0	137.58	0.08870	137.58	0.10644	137.58	0.10644	150.42	0.13305	150.51	0.13305	150.42	0.15523	137.58	0.10644	0.91
#4/0	115.40	0.08752	115.40	0.10502	115.41	0.10502	132.14	0.13128	132.56	0.13128	132.14	0.15316	115.41	0.10502	0.86
250MCM	101.40	0.08734	101.40	0.10480	101.40	0.10480	118.45	0.13101	118.50	0.13101	118.45	0.15284	101.40	0.10480	0.84
300MCM	89.98	0.08473	89.98	0.10168	89.98	0.10168	109.46	0.12710	109.46	0.12710	109.46	0.14828	89.98	0.10168	0.80
350MCM	81.67	0.08586	81.67	0.10280	81.68	0.10280	104.02	0.12850	104.36	0.12850	104.02	0.14891	81.68	0.10280	0.76
400MCM	76.02	0.08442	76.02	0.10131	76.02	0.10131	99.68	0.12663	99.83	0.12663	99.68	0.14774	76.02	0.10131	0.72
500MCM	67.92	0.08231	67.92	0.09877	67.92	0.09877	93.54	0.12347	93.54	0.12347	93.54	0.14405	67.92	0.09877	0.67
750MCM	55.32	0.08075	55.32	0.09690	55.32	0.09690	82.54	0.12112	82.57	0.12112	82.54	0.14131	55.32	0.09690	0.58
1000MCM	48.18	0.07947	48.18	0.09537	48.18	0.09537	75.34	0.11921	75.37	0.11921	75.34	0.13908	48.18	0.09537	0.52

NOTE – THIS TABLE WAS REPRINTED FROM THE 1972 FEBRUARY EDITION OF ACTUAL SPECIFYING ENGINEER

TABLE B-5
EFFECTIVE A.C. RESISTANCE AND INDUCTANCE VALUES FOR
XHHW ALUMINUM SINGLE CONDUCTORS AT 400 HZ
(R_{ac} =microhms per ft., L = microhenries per ft.)

Wire Size	In Air		Non-metallic Conduit		Rigid Alum. Conduit		Rigid Steel Conduit		Elec. Metallic Tubing		Steel Cable Tray		Aluminum Cable Tray		Ampacity Derating Factor Steel Conduit
	R_{ac}	L	R_{ac}	L	R_{ac}	L	R_{ac}	L	R_{ac}	L	R_{ac}	L	R_{ac}	L	
#12	5041.24	0.10499	5041.24	0.12599	5041.24	0.12599	5042.95	0.15749	5043.05	0.15749	5042.95	0.18374	5041.24	0.12599	0.99
#10	2030.56	0.09926	2030.56	0.11911	2030.56	0.11911	2031.47	0.14889	2031.55	0.14889	2031.47	0.17370	2030.56	0.11911	0.99
#8	1280.97	0.10251	1280.97	0.12302	1280.98	0.12302	1282.45	0.15377	1282.56	0.15377	1282.45	0.17940	1280.98	0.12302	0.99
#6	805.94	0.09896	805.94	0.11875	805.95	0.11875	808.82	0.14844	809.05	0.14844	808.82	0.17318	805.95	0.11875	0.99
#4	508.20	0.09500	508.20	0.11401	508.20	0.11401	512.67	0.14251	513.06	0.14251	512.67	0.16626	508.20	0.11401	0.99
#2	323.51	0.09070	323.51	0.10884	323.52	0.10884	329.35	0.13605	329.48	0.13605	329.35	0.15873	323.52	0.10884	0.98
#1	258.69	0.08918	258.69	0.10701	258.70	0.10701	265.95	0.13377	266.18	0.13377	265.95	0.15606	258.70	0.10701	0.97
#1/0	209.83	0.08798	209.83	0.10558	209.84	0.10558	221.13	0.13197	222.39	0.13197	221.13	0.15397	209.84	0.10558	0.95
#2/0	170.12	0.08618	170.12	0.10341	170.13	0.10341	182.67	0.12927	183.36	0.12927	182.67	0.15081	170.13	0.10341	0.93
#3/0	139.11	0.08443	139.11	0.10131	139.11	0.10131	153.01	0.12664	154.03	0.12664	153.01	0.14775	139.11	0.10131	0.90
#4/0	117.13	0.08354	117.13	0.10024	117.15	0.10024	136.18	0.12531	136.87	0.12531	136.18	0.14619	117.15	0.10024	0.85
250MCM	103.46	0.08306	103.46	0.09967	103.47	0.09967	122.88	0.12459	123.04	0.12459	122.88	0.14536	103.47	0.09967	0.82
300MCM	92.17	0.08161	92.17	0.09793	92.17	0.09793	113.90	0.12241	113.92	0.12241	113.90	0.14281	92.17	0.09793	0.78
350MCM	83.90	0.08170	83.90	0.09804	83.92	0.09804	109.10	0.12255	109.68	0.12255	109.10	0.14297	83.92	0.09804	0.74
400MCM	78.29	0.08081	78.29	0.09698	78.30	0.09698	104.65	0.12122	104.95	0.12122	104.65	0.14143	78.30	0.09698	0.71
500MCM	70.14	0.07919	70.14	0.09503	70.14	0.09503	98.09	0.11879	98.13	0.11879	98.09	0.13859	70.14	0.09503	0.65
750MCM	57.10	0.07818	57.10	0.09381	57.10	0.09381	86.00	0.11727	86.00	0.11727	86.00	0.13681	57.10	0.09381	0.57
1000MCM	49.67	0.07727	49.67	0.09273	49.67	0.09273	78.25	0.11591	78.25	0.11591	78.25	0.13523	49.67	0.09273	0.51

NOTE – THIS TABLE WAS REPRINTED FROM THE 1972 FEBRUARY EDITION OF ACTUAL SPECIFYING ENGINEER

TABLE B-6
EFFECTIVE A.C. RESISTANCE AND INDUCTANCE VALUES FOR
THHN ALUMINUM SINGLE CONDUCTORS AT 400 HZ
(R_{ac} =microhms per ft., L = microhenries per ft.)

Wire Size	In Air		Non-metallic Conduit		Rigid Alum. Conduit		Rigid Steel Conduit		Elec. Metallic Tubing		Steel Cable Tray		Aluminum Cable Tray		Ampacity Derating Factor Steel Conduit
	R_{ac}	L	R_{ac}	L	R_{ac}	L	R_{ac}	L	R_{ac}	L	R_{ac}	L	R_{ac}	L	
#12	5041.71	0.08946	5041.71	0.10736	5041.72	0.10736	5043.77	0.13420	5043.84	0.13420	5043.77	0.15656	5041.72	0.10736	0.99
#10	2030.67	0.09131	2030.67	0.10957	2030.67	0.10957	2031.64	0.13697	2031.70	0.13697	2031.64	0.15979	2030.67	0.10957	0.99
#8	1281.18	0.09403	1281.18	0.11284	1281.19	0.11284	1282.79	0.14105	1282.88	0.14105	1282.79	0.16456	1281.19	0.11284	0.99
#6	806.30	0.09223	806.30	0.11067	806.30	0.11067	809.44	0.13834	809.63	0.13834	809.44	0.16140	806.30	0.11067	0.99
#4	508.35	0.09317	508.35	0.11181	508.36	0.11181	513.00	0.13976	513.37	0.13976	513.00	0.16306	508.36	0.11181	0.99
#2	323.74	0.08921	323.74	0.10705	323.74	0.10705	329.89	0.13382	330.06	0.13382	329.89	0.15612	323.74	0.10705	0.96
#1	258.93	0.08788	258.93	0.10546	258.93	0.10546	266.52	0.13182	266.81	0.13182	266.52	0.15380	258.93	0.10546	0.97
#1/0	210.11	0.08675	210.11	0.10410	210.13	0.10410	221.98	0.13013	223.20	0.13013	221.98	0.15182	210.13	0.10410	0.95
#2/0	170.45	0.08506	170.45	0.10208	170.46	0.10208	183.42	0.12760	184.23	0.12760	183.42	0.14686	170.46	0.10208	0.93
#3/0	139.49	0.08346	139.49	0.10015	139.50	0.10015	154.67	0.12519	154.92	0.12519	154.67	0.14606	139.50	0.10015	0.89
#4/0	117.56	0.08263	117.56	0.09916	117.56	0.09916	137.17	0.12395	137.95	0.12395	137.17	0.14461	117.56	0.09916	0.85
250MCM	103.88	0.08226	103.88	0.09872	103.88	0.09872	123.78	0.12340	123.97	0.12340	123.78	0.14396	103.88	0.09872	0.82
300MCM	92.60	0.08090	92.60	0.09708	92.60	0.09708	114.80	0.12136	114.83	0.12136	114.80	0.14156	92.80	0.09708	0.78
350MCM	84.34	0.08099	84.34	0.09719	84.36	0.09719	110.11	0.12149	110.74	0.12149	110.11	0.14174	84.36	0.09719	0.74
400MCM	78.73	0.08015	78.73	0.09618	78.74	0.09618	105.63	0.12023	105.96	0.12023	105.63	0.14027	78.74	0.09618	0.70
500MCM	70.57	0.07863	70.57	0.09436	70.57	0.09436	98.99	0.11795	99.04	0.11795	98.99	0.13761	70.57	0.09436	0.65
750MCM	57.43	0.07779	57.43	0.09335	57.43	0.09335	86.67	0.11669	86.67	0.11669	86.67	0.13613	57.43	0.09335	0.57
1000MCM	49.95	0.07684	49.95	0.09221	49.95	0.09221	78.81	0.11527	78.81	0.11527	78.81	0.13448	49.95	0.09221	0.51

NOTE – THIS TABLE WAS REPRINTED FROM THE 1972 FEBRUARY EDITION OF ACTUAL SPECIFYING ENGINEER

TABLE B-7
EFFECTIVE A.C. RESISTANCE AND INDUCTANCE VALUES FOR
THW, RHW COPPER THREE CONDUCTOR JACKETED CABLE AT 400 HZ
(R_{ac} =microhms per ft., L = microhenries per ft.)

Wire Size	In Air		Non-metallic Conduit		Rigid Alum. Conduit		Rigid Steel Conduit		Steel Armored Cable		Alum. Armored Cable		Steel Cable Tray		Aluminum Cable Tray		Ampacity Derating Factor Steel Conduit
	R_{ac}	L	R_{ac}	L	R_{ac}	L	R_{ac}	L	R_{ac}	L	R_{ac}	L	R_{ac}	L	R_{ac}	L	
#4	314.44	0.08819	314.44	0.08819	314.46	0.08819	321.55	0.11465	321.75	0.13229	316.12	0.10983	321.55	0.15434	314.46	0.08819	0.98
#2	197.50	0.08357	197.50	0.08357	197.52	0.08357	203.41	0.10865	204.28	0.12538	199.43	0.10029	203.41	0.14626	197.52	0.08357	0.97
#1	162.95	0.08272	162.95	0.08272	162.97	0.08272	175.02	0.10754	175.27	0.12409	164.93	0.09927	175.02	0.14477	162.97	0.08272	0.93
#1/0	133.63	0.08045	133.63	0.08045	133.68	0.08045	150.74	0.10459	148.88	0.12068	135.76	0.09654	150.74	0.14079	133.68	0.08045	0.89
#2/0	112.96	0.07848	112.96	0.07848	113.02	0.07848	133.61	0.10202	132.68	0.11772	115.16	0.09417	133.61	0.13734	113.02	0.07848	0.85
#3/0	94.74	0.07669	94.74	0.07669	94.77	0.07669	117.26	0.09970	116.68	0.11504	97.03	0.09203	117.26	0.13421	94.77	0.07669	0.80
#4/0	82.04	0.07502	82.04	0.07502	82.11	0.07502	109.35	0.09753	107.27	0.11254	84.38	0.09003	109.35	0.13129	82.11	0.07502	0.74
250MCM	73.66	0.07552	73.66	0.07552	73.71	0.07552	101.92	0.09818	100.12	0.11329	76.19	0.09063	101.92	0.13217	73.71	0.07552	0.71
300MCM	67.60	0.07421	67.60	0.07421	67.64	0.07421	98.45	0.09648	95.92	0.11132	70.20	0.08906	98.45	0.12988	67.64	0.07421	0.66
350MCM	61.52	0.07320	61.52	0.07320	61.61	0.07320	94.40	0.09517	90.85	0.10981	64.23	0.08785	94.40	0.12811	61.61	0.07320	0.62
400MCM	58.85	0.07235	58.85	0.07235	58.93	0.07235	93.31	0.09405	89.72	0.10852	61.68	0.08682	93.31	0.12661	58.93	0.07235	0.59
500MCM	52.34	0.07096	52.34	0.07096	52.41	0.07096	88.07	0.09224	84.28	0.10644	55.51	0.08515	88.07	0.12418	52.41	0.07096	0.54
750MCM	42.25	0.06985	42.25	0.06985	42.33	0.06985	79.53	0.09061	74.47	0.10478	46.46	0.08382	79.53	0.12224	42.33	0.06985	0.46
1000MCM	36.25	0.06851	36.25	0.06851	36.35	0.06851	74.04	0.08907	69.46	0.10277	42.06	0.08221	74.04	0.11990	36.35	0.06851	0.41

NOTE -- THIS TABLE WAS REPRINTED FROM THE 1972 FEBRUARY EDITION OF ACTUAL SPECIFYING ENGINEER

TABLE B-8
EFFECTIVE A.C. RESISTANCE AND INDUCTANCE VALUES FOR XHHW COPPER THREE CONDUCTOR JACKETED CABLE AT 400 HZ
(R_{ac} =microhms per ft., L = microhenries per ft.)

Wire Size	In Air		Non-metallic Conduit		Rigid Alum. Conduit		Rigid Steel Conduit		Steel Armored Cable		Alum. Armored Cable		Steel Cable Tray		Aluminum Cable Tray		Ampacity Derating Factor Steel Conduit
	R_{ac}	L	R_{ac}	L	R_{ac}	L	R_{ac}	L	R_{ac}	L	R_{ac}	L	R_{ac}	L	R_{ac}	L	
#4	315.13	0.06190	315.13	0.06190	315.15	0.06190	322.15	0.10647	324.06	0.12285	317.37	0.09828	322.15	0.14333	315.15	0.06190	0.98
#2	197.98	0.07823	197.98	0.07823	198.00	0.07823	204.38	0.10170	206.13	0.11734	200.43	0.09367	204.38	0.13690	198.00	0.07823	0.97
#1	164.30	0.07666	164.30	0.07666	164.33	0.07666	177.81	0.09966	179.03	0.11499	166.90	0.09199	177.81	0.13416	164.33	0.07666	0.93
#1/0	135.28	0.07487	135.26	0.07487	135.31	0.07487	153.63	0.09733	153.17	0.11231	138.00	0.08985	153.63	0.13103	135.31	0.07487	0.89
#2/0	115.04	0.07336	115.04	0.07336	115.08	0.07336	138.15	0.09537	137.73	0.11004	117.77	0.08803	138.15	0.12839	115.08	0.07336	0.83
#3/0	96.85	0.07202	96.85	0.07202	96.88	0.07202	121.43	0.09362	121.80	0.10803	99.67	0.08642	121.43	0.12603	96.88	0.07202	0.79
#4/0	84.28	0.07076	84.28	0.07076	84.35	0.07076	114.11	0.09199	112.57	0.10614	87.10	0.08491	114.11	0.12383	84.35	0.07076	0.72
250MCM	76.17	0.07074	76.17	0.07074	76.23	0.07074	106.68	0.09196	106.17	0.10611	79.30	0.08488	106.68	0.12379	76.23	0.07074	0.69
300MCM	70.07	0.06976	70.07	0.06976	70.12	0.06976	102.75	0.09069	101.83	0.10464	73.24	0.08371	102.75	0.12206	70.12	0.06976	0.65
350MCM	63.88	0.06902	63.88	0.06902	63.97	0.06902	99.19	0.08973	98.49	0.10353	67.13	0.08283	99.19	0.12079	63.97	0.06902	0.60
400MCM	61.15	0.06838	61.15	0.06838	61.23	0.06838	97.73	0.08890	95.23	0.10258	64.52	0.08206	97.73	0.11968	61.23	0.06838	0.57
500MCM	54.39	0.06734	54.39	0.06734	54.46	0.06734	91.57	0.08755	89.31	0.10101	58.11	0.08081	91.57	0.11785	54.46	0.06734	0.53
750MCM	43.70	0.06684	43.70	0.06684	43.78	0.06684	81.52	0.08689	78.38	0.10026	48.51	0.08021	81.52	0.11697	43.78	0.06684	0.45
1000MCM	37.40	0.06585	37.40	0.06585	37.51	0.06585	75.49	0.08561	73.01	0.09878	43.93	0.07902	75.49	0.11524	37.51	0.06585	0.41

NOTE - THIS TABLE WAS REPRINTED FROM THE 1972 FEBRUARY EDITION OF ACTUAL SPECIFYING ENGINEER

TABLE B-9
EFFECTIVE A.C. RESISTANCE AND INDUCTANCE VALUES FOR
THHN COPPER THREE CONDUCTOR JACKETED CABLE AT 400 HZ
(R_{ac} =microhms per ft., L = microhenries per ft.)

Wire Size	In Air		Non-metallic Conduit		Rigid Alum. Conduit		Rigid Steel Conduit		Steel Armored Cable		Alum. Armored Cable		Steel Cable Tray		Aluminum Cable Tray		Ampacity Derating Factor Steel Conduit
	R_{ac}	L	R_{ac}	L	R_{ac}	L	R_{ac}	L	R_{ac}	L	R_{ac}	L	R_{ac}	L	R_{ac}	L	
#4	315.37	0.07998	315.37	0.07998	315.39	0.07998	322.46	0.10397	324.90	0.11997	317.82	0.09597	322.46	0.13996	315.39	0.07998	0.98
#2	198.15	0.07661	198.15	0.07661	198.17	0.07661	204.76	0.09959	206.78	0.11492	200.78	0.09193	204.76	0.13407	198.17	0.07661	0.97
#1	164.66	0.07527	164.66	0.07527	164.68	0.07527	178.59	0.09785	180.03	0.11290	167.43	0.09032	178.59	0.13172	164.68	0.07527	0.92
#1/0	135.68	0.07359	135.68	0.07359	135.73	0.07359	154.16	0.09567	154.30	0.11039	138.58	0.08831	154.16	0.12879	135.73	0.07359	0.88
#2/0	115.56	0.07219	115.56	0.07219	115.60	0.07219	139.35	0.09385	139.03	0.10829	118.44	0.08663	139.35	0.12634	115.60	0.07219	0.83
#3/0	97.38	0.07096	97.38	0.07096	97.41	0.07096	122.52	0.09225	123.09	0.10644	100.34	0.08515	122.52	0.12418	97.41	0.07096	0.79
#4/0	84.83	0.06980	84.83	0.06980	84.91	0.06980	115.32	0.09074	113.89	0.10470	87.78	0.08376	115.32	0.12215	84.91	0.06980	0.72
250MCM	76.68	0.06987	76.68	0.06987	76.73	0.06987	107.68	0.09083	107.40	0.10480	79.93	0.08384	107.68	0.12227	76.73	0.06987	0.69
300MCM	70.57	0.06895	70.57	0.06895	70.62	0.06895	103.66	0.08964	103.02	0.10343	73.85	0.08274	103.66	0.12067	70.62	0.06895	0.64
350MCM	64.35	0.06826	64.35	0.06826	64.44	0.06826	100.16	0.08874	97.62	0.10240	67.71	0.08192	100.16	0.11946	64.44	0.06826	0.60
400MCM	61.60	0.06767	61.60	0.06767	61.69	0.06767	98.63	0.08797	96.33	0.10151	65.06	0.08120	98.63	0.11843	61.69	0.06767	0.57
500MCM	54.79	0.06669	54.79	0.06669	54.86	0.06669	92.28	0.08670	90.29	0.10004	58.62	0.08003	92.28	0.11671	54.86	0.06669	0.52
750MCM	43.98	0.06631	43.98	0.06631	44.05	0.06631	81.93	0.08620	79.13	0.09946	48.90	0.07957	81.93	0.11604	44.05	0.06631	0.45
1000MCM	37.62	0.06538	37.62	0.06538	37.73	0.06538	75.80	0.08500	73.68	0.09806	44.28	0.07846	75.80	0.11443	37.73	0.06538	0.41

NOTE -- THIS TABLE WAS REPRINTED FROM THE 1972 FEBRUARY EDITION OF ACTUAL SPECIFYING ENGINEER

TABLE B-10
EFFECTIVE A.C. RESISTANCE AND INDUCTANCE VALUES FOR
THW, RHW ALUMINUM THREE CONDUCTOR JACKETED CABLE AT 400 HZ
(R_{ac} =microhms per ft., L = microhenries per ft.)

Wire Size	In Air		Non-metallic Conduit		Rigid Alum. Conduit		Rigid Steel Conduit		Steel Armored Cable		Alum. Armored Cable		Steel Cable Tray		Aluminum Cable Tray		Ampacity Derating Factor Steel Conduit
	R_{ac}	L	R_{ac}	L	R_{ac}	L	R_{ac}	L	R_{ac}	L	R_{ac}	L	R_{ac}	L	R_{ac}	L	
#4	507.77	0.08819	507.77	0.08819	507.79	0.08819	513.40	0.11465	518.55	0.13229	512.48	0.10983	513.40	0.15434	507.79	0.08819	0.99
#2	322.85	0.08357	322.85	0.08357	322.87	0.08357	330.30	0.10865	336.87	0.12536	328.24	0.10029	330.30	0.14626	322.87	0.08357	0.98
#1	257.80	0.08272	257.80	0.08272	257.82	0.08272	266.98	0.10754	273.07	0.12409	263.37	0.09927	266.98	0.14477	257.82	0.08272	0.97
#1/0	208.72	0.08045	208.72	0.08045	208.77	0.08045	222.40	0.10459	226.59	0.12068	214.69	0.09654	222.40	0.14079	208.77	0.08045	0.95
#2/0	168.82	0.07848	168.82	0.07848	168.86	0.07848	183.66	0.10202	189.03	0.11772	174.93	0.09417	183.66	0.13734	168.86	0.07848	0.93
#3/0	137.58	0.07669	137.58	0.07669	137.61	0.07669	154.98	0.09970	161.09	0.11504	144.01	0.09203	154.98	0.13421	137.61	0.07669	0.89
#4/0	115.40	0.07502	115.40	0.07502	115.47	0.07502	137.57	0.09753	142.17	0.11254	121.97	0.09003	137.57	0.13129	115.47	0.07502	0.85
250MCM	101.40	0.07552	101.40	0.07552	101.46	0.07552	124.92	0.09818	130.39	0.11329	108.51	0.09063	124.92	0.13217	101.46	0.07552	0.82
300MCM	89.98	0.07421	89.98	0.07421	90.02	0.07421	116.86	0.09646	121.84	0.11132	97.26	0.08906	116.86	0.12988	90.02	0.07421	0.77
350MCM	81.67	0.07320	81.67	0.07320	81.76	0.07320	111.85	0.09517	115.93	0.10981	89.25	0.08785	111.85	0.12811	81.76	0.07320	0.73
400MCM	76.02	0.07235	76.02	0.07235	76.10	0.07235	106.17	0.09405	112.76	0.10852	83.97	0.08682	106.17	0.12661	76.10	0.07235	0.69
500MCM	67.92	0.07096	67.92	0.07096	67.99	0.07096	103.46	0.09224	108.65	0.10644	76.80	0.08515	103.46	0.12418	67.99	0.07096	0.63
750MCM	55.32	0.06985	55.32	0.06985	55.40	0.06985	95.88	0.09081	102.56	0.10478	67.15	0.08382	95.88	0.12224	55.40	0.06985	0.54
1000MCM	48.18	0.06851	48.18	0.06851	48.28	0.06851	90.83	0.08907	102.98	0.10277	64.48	0.08221	90.83	0.11990	48.28	0.06851	0.48

NOTE - THIS TABLE WAS REPRINTED FROM THE 1972 FEBRUARY EDITION OF ACTUAL SPECIFYING ENGINEER

TABLE B-11
EFFECTIVE A.C. RESISTANCE AND INDUCTANCE VALUES FOR
XHHW ALUMINUM THREE CONDUCTOR JACKETED CABLE AT 400 HZ
(R_{ac} =microhms per ft., L = microhenries per ft.)

Wire Size	In Air		Non-metallic Conduit		Rigid Alum. Conduit		Rigid Steel Conduit		Steel Armored Cable		Alum. Armored Cable		Steel Cable Tray		Aluminum Cable Tray		Ampacity Derating Factor Steel Conduit
	R_{ac}	L	R_{ac}	L	R_{ac}	L	R_{ac}	L	R_{ac}	L	R_{ac}	L	R_{ac}	L	R_{ac}	L	
#4	508.20	0.08190	508.20	0.08190	508.22	0.08190	513.43	0.10647	522.05	0.12285	514.46	0.09828	513.43	0.14333	508.22	0.08190	0.99
#2	323.51	0.07823	323.51	0.07823	323.53	0.07823	331.64	0.10170	340.69	0.11734	330.37	0.09387	331.64	0.13690	323.53	0.07823	0.97
#1	258.69	0.07666	258.69	0.07666	258.72	0.07666	268.84	0.09966	277.80	0.11499	265.99	0.09199	268.84	0.13416	258.72	0.07666	0.96
#1/0	209.83	0.07487	209.83	0.07487	209.88	0.07487	224.20	0.09733	231.87	0.11231	217.48	0.08985	224.20	0.13103	209.88	0.07487	0.94
#2/0	170.12	0.07336	170.12	0.07336	170.16	0.07336	186.72	0.09537	194.29	0.11004	177.79	0.08803	186.72	0.12839	170.16	0.07336	0.92
#3/0	139.11	0.07202	139.11	0.07202	139.14	0.07202	157.99	0.09362	166.67	0.10803	147.02	0.08642	157.99	0.12603	139.14	0.07202	0.88
#4/0	117.13	0.07076	117.13	0.07076	117.21	0.07076	141.34	0.09199	147.95	0.10614	125.06	0.08491	141.34	0.12383	117.21	0.07076	0.84
250MCM	103.46	0.07074	103.46	0.07074	103.52	0.07074	128.74	0.09196	137.35	0.10611	112.24	0.08488	128.74	0.12379	103.52	0.07074	0.81
300MCM	92.17	0.06976	92.17	0.06976	92.22	0.06976	120.54	0.09069	128.89	0.10464	101.02	0.08371	120.54	0.12208	92.22	0.06976	0.76
350MCM	83.90	0.06902	83.90	0.06902	84.00	0.06902	116.40	0.08973	123.00	0.10353	93.02	0.08283	116.40	0.12079	84.00	0.06902	0.71
400MCM	78.29	0.06838	78.29	0.06838	78.38	0.06838	112.52	0.08890	119.87	0.10258	87.75	0.08206	112.52	0.11968	78.38	0.06838	0.68
500MCM	70.14	0.06734	70.14	0.06734	70.21	0.06734	107.25	0.08755	115.69	0.10101	80.56	0.08061	107.25	0.11785	70.21	0.06734	0.62
750MCM	57.10	0.06684	57.10	0.06684	57.18	0.06684	98.23	0.08689	108.97	0.10026	70.61	0.08021	98.23	0.11697	57.18	0.06684	0.53
1000MCM	49.67	0.06585	49.67	0.06585	49.78	0.06585	92.90	0.08561	109.41	0.09878	68.00	0.07902	92.90	0.11524	49.78	0.06585	0.47

NOTE – THIS TABLE WAS REPRINTED FROM THE 1972 FEBRUARY EDITION OF ACTUAL SPECIFYING ENGINEER

TABLE B-12
EFFECTIVE A.C. RESISTANCE AND INDUCTANCE VALUES FOR
THHN ALUMINUM THREE CONDUCTOR JACKETED CABLE AT 400 HZ
(R_{ac} =microhms per ft., L = microhenries per ft.)

Wire Size	In Air		Non-metallic Conduit		Rigid Alum. Conduit		Rigid Steel Conduit		Steel Armored Cable		Alum. Armored Cable		Steel Cable Tray		Aluminum Cable Tray		Ampacity Derating Factor Steel Conduit
	R_{ac}	L	R_{ac}	L	R_{ac}	L	R_{ac}	L	R_{ac}	L	R_{ac}	L	R_{ac}	L	R_{ac}	L	
#4	508.35	0.07998	508.35	0.07998	508.37	0.07998	513.54	0.10397	523.34	0.11997	515.20	0.09597	513.54	0.13996	508.37	0.07998	0.99
#2	323.74	0.07661	323.74	0.07661	323.76	0.07661	332.15	0.09959	342.04	0.11492	331.13	0.09193	332.15	0.13407	323.76	0.07661	0.97
#1	258.93	0.07527	258.93	0.07527	258.95	0.07527	269.39	0.09785	279.08	0.11290	266.70	0.09032	269.39	0.13172	258.95	0.07527	0.96
#1/0	210.11	0.07359	210.11	0.07359	210.16	0.07359	224.43	0.09567	233.02	0.11039	218.22	0.08831	224.43	0.12879	210.16	0.07359	0.94
#2/0	170.45	0.07219	170.45	0.07219	170.50	0.07219	187.56	0.09385	195.65	0.10829	178.54	0.08663	187.56	0.12634	170.50	0.07219	0.92
#3/0	139.49	0.07096	139.49	0.07096	139.53	0.07096	158.78	0.09225	168.09	0.10644	147.79	0.08515	158.78	0.12416	139.53	0.07096	0.88
#4/0	117.56	0.06980	117.56	0.06980	117.64	0.06980	142.31	0.09074	149.40	0.10470	125.84	0.08376	142.31	0.12215	117.64	0.06980	0.83
250MCM	103.88	0.06987	103.88	0.06987	103.93	0.06987	129.55	0.09083	138.77	0.10480	113.00	0.08384	129.55	0.12227	103.93	0.06987	0.80
300MCM	92.60	0.06895	92.60	0.06895	92.65	0.06895	121.32	0.08964	130.31	0.10343	101.78	0.08274	121.32	0.12067	92.65	0.06895	0.76
350MCM	84.34	0.06826	84.34	0.06826	84.45	0.06826	117.32	0.08874	124.42	0.10240	93.77	0.08192	117.32	0.11948	84.45	0.06826	0.71
400MCM	78.73	0.06767	78.73	0.06767	78.82	0.06767	113.40	0.08797	121.28	0.10151	88.50	0.08120	113.40	0.11843	78.82	0.06767	0.68
500MCM	70.57	0.06669	70.57	0.06669	70.64	0.06669	108.03	0.08670	117.07	0.10004	81.29	0.08003	108.03	0.11671	70.64	0.06669	0.62
750MCM	57.43	0.06831	57.43	0.06831	57.52	0.06831	98.76	0.08620	110.19	0.09946	71.27	0.07957	98.76	0.11604	57.52	0.06831	0.53
1000MCM	49.95	0.06538	49.95	0.06538	50.06	0.06538	93.31	0.08500	110.62	0.09808	68.66	0.07846	93.31	0.11443	50.06	0.06538	0.47

NOTE – THIS TABLE WAS REPRINTED FROM THE 1972 FEBRUARY EDITION OF ACTUAL SPECIFYING ENGINEER

REFERENCES

NOTE: THE FOLLOWING REFERENCED DOCUMENTS FORM A PART OF THIS HANDBOOK TO THE EXTEND SPECIFIED HEREIN. USERS OF THIS HANDBOOK SHOULD REFER TO THE LATEST REVISIONS OF CITED DOCUMENTS UNLESS OTHERWISE DIRECTED.

FEDERAL/MILITARY SPECIFICATIONS, STANDARDS, BULLETINS, HANDBOOKS, AND NAVFAC GUIDE SPECIFICATIONS:

Unless otherwise indicated, copies are available from Defense Printing Service, Standardization Document Order Desk, Building 4D, 700 Robbins Avenue, Philadelphia, PA 19111-5094.

MILITARY SPECIFICATIONS

MIL-E-24021	Electrical Power Monitors, External, Aircraft

STANDARDS

MIL-STD-704	Aircraft Electric Power Characteristics
MIL-STD-90328	Cable Assembly External Electric Power Aircraft 115/200 Volt, 400 Hz

HANDBOOKS

MIL-HDBK-1003/7	Steam Power Plants - Fossil Fueled
MIL-HDBK-1003/11	Diesel-Electric Generating Plants
MIL-HDBK-1004/1	Electrical Engineering Preliminary Design Considerations
MIL-HDBK-1004/2	Power Distribution Systems
MIL-HDBK-1004/3	Switchgear and Relaying
MIL-HDBK-1004/4	Electrical Utilization Systems
MIL-HDBK-1021/2	General Concepts for Airfield Pavement Design
MIL-HDBK-1028/6	Aircraft Fixed Point Utility Systems

GUIDE SPECIFICATIONS

NFGS-16305
400-Hz Low Voltage Substation

NON-GOVERNMENT PUBLICATIONS:

FINK AND BEATY, Standard Handbook for Electrical Engineers, 11th Edition, McGraw-Hill Book Company, Inc., New York, NY 10036

NATIONAL FIRE PROTECTION ASSOCIATION (NFPA)

NFPA 70-93
National Electrical Code (NEC)

(Unless otherwise indicated copies are available from the National Fire Protection Association, Inc., Batterymarch Park, Quincy, MA 02269)

CUSTODIAN
NAVY - YD2

PREPARING ACTIVITY

NAVY - YD2

PROJECT NO.

FACR - 1080