UFC 3-570-02N
16 January 2004

UNIFIED FACILITIES CRITERIA (UFC)

DESIGN: ELECTRICAL ENGINEERING CATHODIC PROTECTION

APPROVED FOR PUBLIC RELEASE; DISTRIBUTION UNLIMITED

UNIFIED FACILITIES CRITERIA (UFC)

DESIGN: ELECTRICAL ENGINEERING CATHODIC PROTECTION

Any copyrighted material included in this UFC is identified at its point of use.
Use of the copyrighted material apart from this UFC must have the permission of the copyright holder.

U.S. ARMY CORPS OF ENGINEERS

NAVAL FACILITIES ENGINEERING COMMAND (Preparing Activity)

AIR FORCE CIVIL ENGINEERING SUPPORT AGENCY

Record of Changes (changes indicated by **1**\ ... /**1**/)

Change No.	Date	Location

FOREWORD

The Unified Facilities Criteria (UFC) system is prescribed by MIL-STD 3007 and provides planning, design, construction, sustainment, restoration, and modernization criteria, and applies to the Military Departments, the Defense Agencies, and the DoD Field Activities in accordance with USD(AT&L) Memorandum dated 29 May 2002. UFC will be used for all DoD projects and work for other customers where appropriate.

UFC are living documents and will be periodically reviewed, updated, and made available to users as part of the Services' responsibility for providing technical criteria for military construction. Headquarters, U.S. Army Corps of Engineers (HQUSACE), Naval Facilities Engineering Command (NAVFAC), and Air Force Civil Engineer Support Agency (AFCESA) are responsible for administration of the UFC system. Defense agencies should contact the preparing service for document interpretation and improvements. Technical content of UFC is the responsibility of the cognizant DoD working group. Recommended changes with supporting rationale should be sent to the respective service proponent office by the following electronic form: Criteria Change Request (CCR). The form is also accessible from the Internet sites listed below.

UFC are effective upon issuance and are distributed only in electronic media from the following sources:

- Unified Facilities Criteria (UFC) Index http://65.204.17.188//report/doc_ufc.html.
- USACE TECHINFO Internet site http://www.hnd.usace.army.mil/techinfo/index.htm.
- NAVFAC Engineering Innovation and Criteria Office Internet site http://criteria.navfac.navy.mil.
- Construction Criteria Base (CCB) system maintained by the National Institute of Building Sciences at Internet site http://www.nibs.org/ccb.

Hard copies of UFC printed from electronic media should be checked against the current electronic version prior to use to ensure that they are current.

AUTHORIZED BY:

DONALD L. BASHAM, P.E.
Chief, Engineering and Construction Division
U.S. Army Corps of Engineers

DR. JAMES W WRIGHT, P.E.
Chief Engineer
Naval Facilities Engineering Command

KATHLEEN I. FERGUSON, P.E.
The Deputy Civil Engineer
DCS/Installations & Logistics
Department of the Air Force

Dr. GET W. MOY, P.E.
Director, Installations Requirements and Management
Office of the Deputy Under Secretary of Defense (Installations and Environment)

CONTENTS

Page

CHAPTER 1 INTRODUCTION

Paragraph 1-1 PURPOSE AND SCOPE 1-1
1-2 APPLICABILITY 1-1
1-2.1 General Building Requirements 1-1
1-2.2 Safety 1-1
1-2.3 Fire Protection 1-1
1-2.4 Antiterrorism/Force Protection 1-1
1-3 REFERENCES 1-1

APPENDIX A MIL-HDBK 1004/10..... A-1

CHAPTER 1

INTRODUCTION

1-1 **PURPOSE AND SCOPE**. This UFC is comprised of two sections. Chapter 1 introduces this UFC and provides a listing of references to other Tri-Service documents closely related to the subject. Appendix A contains the full text copy of the previously released Military Handbook (MIL-HDBK) on this subject. This UFC serves as criteria until such time as the full text UFC is developed from the MIL-HDBK and other sources.

This UFC provides general criteria for the design of cathodic protection.

Note that this document does not constitute a detailed technical design, maintenance or operations manual, and is issued as a general guide to the considerations associated with design of economical, efficient and environmentally acceptable heating plants.

1-2 **APPLICABILITY**. This UFC applies to all Navy service elements and Navy contractors; Army service elements should use the references cited in paragraph 1-3 below; all other DoD agencies may use either document unless explicitly directed otherwise.

1-2.1 **GENERAL BUILDING REQUIREMENTS**. All DoD facilities must comply with UFC 1-200-01, *Design: General Building Requirements*. If any conflict occurs between this UFC and UFC 1-200-01, the requirements of UFC 1-200-01 take precedence.

1-2.2 **SAFETY**. All DoD facilities must comply with DODINST 6055.1 and applicable Occupational Safety and Health Administration (OSHA) safety and health standards.

NOTE: All **NAVY** projects, must comply with OPNAVINST 5100.23 (series), *Navy Occupational Safety and Health Program Manual*. The most recent publication in this series can be accessed at the NAVFAC Safety web site: www.navfac.navy.mil/safety/pub.htm. If any conflict occurs between this UFC and OPNAVINST 5100.23, the requirements of OPNAVINST 5100.23 take precedence.

1-2.3 **FIRE PROTECTION**. All DoD facilities must comply with UFC 3-600-01, *Design: Fire Protection Engineering for Facilities*. If any conflict occurs between this UFC and UFC 3-600-01, the requirements of UFC 3-600-01 take precedence.

1-2.4 **ANTITERRORISM/FORCE PROTECTION**. All DoD facilities must comply with UFC 4-010-01, *Design: DoD Minimum Antiterrorism Standards for Buildings*. If any conflict occurs between this UFC and UFC 4-010-01, the requirements of UFC 4-010-01 take precedence.

1-3 **REFERENCES**. The following Tri-Service publications have valuable information on the subject of this UFC. When the full text UFC is developed for this

subject, applicable portions of these documents will be incorporated into the text. The designer is encouraged to access and review these documents as well as the references cited in Appendix A.

1. US Army Corps of Engineers
Commander
USACE Publication Depot
ATTN: CEIM-IM-PD
2803 52nd Avenue
Hyattsville, MD 20781-1102
(301) 394-0081 fax: 0084
karl.abt@hq02.usace.army.mil
http://www.usace.army.mil/inet/usace-docs/

USACE TM 5-811-7, Electrical Design Cathodic Protection, 22 April 1985
USACE TL 1110-3-474, Cathodic Protection 14 July 1995
USACE TL 1110-9-10, Cathodic Protection System Using Ceramic Anodes, 05 January 1991

APPENDIX A

MIL-HDBK 1004/10
ELECTRICAL ENGINEERING CATHODIC PROTECTION

INCH-POUND

MIL-HDBK-1004/10

31 JANUARY 1990

MILITARY HANDBOOK

ELECTRICAL ENGINEERING CATHODIC PROTECTION

AMSC N/A

DISTRIBUTION STATEMENT A. APPROVED FOR PUBLIC RELEASE: DISTRIBUTION IS UNLIMITED

AREA FACR

THIS PAGE INTENTIONALLY LEFT BLANK

ABSTRACT

This manual is intended for use in the design and construction of cathodic protection systems for the mitigation of corrosion of buried or submerged metallic structures. Design of cathodic protection systems is somewhat different than design of other electrical or mechanical systems because it must be based upon local environmental conditions such as soil resistivity. This manual presents criteria for cathodic protection, methodologies for the determination of required environmental conditions, methodologies for design of cathodic protection systems, examples of typical systems and design calculations, installation and construction practices, recommended initial system checkout procedures, and system maintenance requirements.

THIS PAGE INTENTIONALLY LEFT BLANK

FOREWORD

This handbook has been developed from an evaluation of facilities in the shore establishment, from surveys of the availability of new materials and construction methods, and from selection of the best design practices of the Naval Facilities Engineering Command (NAVFACENGCOM), other Government agencies, and the private sector. This handbook was prepared using, to the maximum extent feasible, national professional society, association, and institute standards. Deviations from these criteria in the planning, engineering, design, and construction of Naval shore facilities cannot be made without prior approval of NAVFACENGCOM HQ (Code 04).

Design cannot remain static any more than can the functions it serves or the technologies it uses. Accordingly, recommendations for improvement are encouraged and should be furnished to Naval Civil Engineering Laboratory, Code L30, Port Hueneme, CA 93043, telephone (805) 982-5743.

THIS HANDBOOK SHALL NOT BE USED AS A REFERENCE DOCUMENT FOR PROCUREMENT OF FACILITIES CONSTRUCTION. IT IS TO BE USED IN THE PURCHASE OF FACILITIES ENGINEERING STUDIES AND DESIGN (FINAL PLANS, SPECIFICATIONS, AND COST ESTIMATES). DO NOT REFERENCE IT IN MILITARY OR FEDERAL SPECIFICATIONS OR OTHER PROCUREMENT DOCUMENTS.

ELECTRICAL ENGINEERING CRITERIA HANDBOOKS AND MANUALS

Criteria Manual	Title	PA
MIL-HDBK-1004/1	Electrical Engineering-Preliminary Design Considerations	CHESDIV
MIL-HDBK-1004/2	Power Distribution Systems	PACDIV
MIL-HDBK-1004/3	Switchgear and Relaying	CHESDIV
MIL-HDBK-1004/4	Electrical Utilization Systems	CHESDIV
DM-4.05	400 Hz Medium Voltage Conversion/ Distribution and Low-Voltage Utilization Systems	SOUTHDIV
MIL-HDBK-1004/6	Lightning Protection	CHESDIV
DM-4.07	Wire Communication and Signal Systems	CHESDIV
DM-4.09	Energy Monitoring and Control Systems	HDQTRS
MIL-HDBK-1004/10	Electrical Engineering Cathodic Protection	NCEL

ELECTRICAL ENGINEERING CATHODIC PROTECTION

CONTENTS

			Page
Section 1	INTRODUCTION		
	1.1	Scope.	1
	1.2	Cancellation.	1
	1.3	Related Technical Documents.	1
Section 2	CATHODIC PROTECTION CONCEPTS		
	2.1	Corrosion as an Electrochemical Process.	3
	2.1.1	Driving Force.	3
	2.1.2	The Electrochemical Cell.	3
	2.1.2.1	Components of the Electrochemical Cell.	3
	2.1.2.2	Reactions in an Electrochemical Cell.	3
	2.2	The Electrochemical Basis for Cathodic Protection.	4
	2.2.1	Potentials Required for Cathodic Protection.	4
	2.3	Practical Application of Cathodic Protection.	5
	2.3.1	When Cathodic Protection Should Be Considered.	5
	2.3.1.1	Where Feasible.	5
	2.3.1.2	When Indicated By Experience.	5
	2.3.1.3	As Required By Regulation.	5
	2.3.2	Functional Requirements for Cathodic Protection	8
	2.3.2.1	Continuity.	8
	2.3.2.2	Electrolyte.	8
	2.3.2.3	Source of Current.	8
	2.3.2.4	Connection to Structure.	8
	2.4	Sacrificial Anode Systems.	8
	2.4.1	Anode Materials.	9
	2.4.2	Connection to Structure.	10
	2.4.3	Other Requirements.	10
	2.5	Impressed Current Systems.	10
	2.5.1	Anode Materials.	10
	2.5.2	Direct Current Power Source.	10
	2.5.3	Connection to Structure.	10
	2.5.4	Other Requirements.	11
Section 3	CRITERIA FOR CATHODIC PROTECTION		
	3.1	Introduction.	13
	3.2	Electrical Criteria.	13
	3.3	Interpretation of Structure-to-Electrolyte Potential Readings.	13
	3.3.1	National Association of Corrosion Engineers (NACE)Standard RP-01-69.	13
	3.3.1.1	Criteria for Steel.	15
	3.3.1.2	Criteria for Aluminum.	15
	3.3.1.3	Criteria for Copper.	15
	3.3.1.4	Criteria for Dissimilar Metal Structures.	15
	3.3.2	Other Electrical Criteria.	15
	3.3.2.1	Criteria for Lead.	16
	3.3.2.2	NACE RP-02-85.	16

Page

3.4 Failure Rate Analysis. 16
3.5 Nondestructive Testing of Facility. 16
3.5.1 Visual Analysis. 16
3.6 Consequences of Underprotection. 17
3.7 Consequences of Overprotection. 18
3.7.1 Coating Disbondment. 18
3.7.2 Hydrogen Embrittlement. 18

Section 4 CATHODIC PROTECTION SYSTEM DESIGN PRINCIPLES
4.1 Introduction. 19
4.2 General Design Procedures. 19
4.2.1 Drawings and Specifications. 19
4.2.1.1 Drawings and Specifications for the Structure to be Protected. 19
4.2.1.2 Site Drawings. 19
4.2.2 Field Surveys. 20
4.2.2.1 Water Analysis. 20
4.2.2.2 Soil Characteristics. 20
4.2.2.3 Current Requirement Tests. 21
4.2.2.4 Location of Other Structures in the Area. 22
4.2.2.5 Availability of ac Power. 22
4.2.3 Current Requirements. 22
4.2.4 Choice of Sacrificial or Impressed Current System. 22
4.2.5 Basic Design Procedure for Sacrificial Anode Systems. 23
4.2.6 Basic Design Procedure for Impressed Current Systems. 24
4.2.6.1 Total Current Determination. 24
4.2.6.2 Total Resistance Determination. 26
4.2.6.3 Voltage and Rectifier Determination. 27
4.2.7 Analysis of Design Factors. 28
4.3 Determination of Field Data. 28
4.3.1 Determination of Electrolyte Resistivity 29
4.3.1.1 In Soils. 29
4.3.1.2 Liquids. 29
4.3.2 Chemical Analysis of the Environment 31
4.3.2.1 pH. 31
4.3.3 Coating Conductance. 31
4.3.3.1 Short Line Method. 33
4.3.3.2 Long Line Method. 33
4.3.4 Continuity Testing. 35
4.3.4.1 Method 1. 35
4.3.4.2 Method 2. 35
4.3.4.3 Method 3. 35
4.3.5 Insulation Testing. 35
4.3.5.1 Buried Structures. 35
4.3.5.2 Aboveground Structures. 38
4.4 Corrosion Survey Checklist. 38

Section 5 PRECAUTIONS FOR CATHODIC PROTECTION SYSTEM DESIGN
5.1 Introduction. 39
5.2 Excessive Currents and Voltages. 39

Page

5.2.1 Interference. 39
5.2.1.1 Detecting Interference. 41
5.2.1.2 Control of Interference - Anode Bed Location. 43
5.2.1.3 Control of Interference - Direct Bonding. 43
5.2.1.4 Control of Interference - Resistive Bonding. 45
5.2.1.5 Control of Interference - Sacrificial Anodes. 47
5.2.2 Effects of High Current Density. 47
5.2.3 Effects of Electrolyte pH. 47
5.3 Hazards Associated with Cathodic Protection. 49
5.3.1 Explosive Hazards. 49
5.3.2 Bonding for Electrical Safety. 49
5.3.3 Induced Alternating Currents. 50

Section 6 IMPRESSED CURRENT SYSTEM
6.1 Advantages of Impressed Current Cathodic Protection Systems. 53
6.2 Determination of Circuit Resistance. 53
6.2.1 Anode-to-Electrolyte Resistance. 53
6.2.1.1 Effect on System Design and Performance. 53
6.2.1.2 Calculation of Anode-to-Electrolyte Resistance 54
6.2.1.3 Basic Equations 54
6.2.1.4 Simplified Expressions for Common Situations. 55
6.2.1.5 Field Measurement. 57
6.2.1.6 Effect of Backfill. 58
6.2.2 Structure-to-Electrolyte Resistance. 59
6.2.3 Connecting Cable Resistance. 59
6.2.4 Resistance of Connections and Splices. 59
6.3 Determination of Power Supply Requirements. 59
6.4 Selection of Power Supply Type. 60
6.4.1 Rectifiers. 60
6.4.2 Thermoelectric Generators. 60
6.4.3 Solar. 60
6.4.4 Batteries. 60
6.4.5 Generators. 60
6.5 Rectifier Selection. 60
6.5.1 Rectifier Components. 61
6.5.1.1 Transformer Component. 61
6.5.1.2 Rectifying Elements. 61
6.5.1.3 Overload Protection. 61
6.5.1.4 Meters. 63
6.5.2 Standard Rectifier Types 63
6.5.2.1 Single-Phase Bridge. 63
6.5.2.2 Single-Phase Center Tap. 63
6.5.2.3 Three-Phase Bridge. 63
6.5.2.4 Three-Phase Wye. 65
6.5.2.5 Special Rectifier Types 65
6.5.3 Rectifier Selection and Specifications. 68
6.5.3.1 Available Features. 69
6.5.3.2 Air Cooled Versus Oil Immersed. 69
6.5.3.3 Selecting ac Voltage. 70
6.5.3.4 dc Voltage and Current Output. 70
6.5.3.5 Filters. 70

Page

6.5.3.6 Explosion Proof Rectifiers. 70
6.5.3.7 Lightning Arresters. 71
6.5.3.8 Selenium Versus Silicon Stacks. 71
6.5.3.9 Other Options. 71
6.5.3.10 Rectifier Alternating Current Rating. 71
6.6 Anodes for Impressed Current Systems. 73
6.6.1 Graphite Anodes. 74
6.6.1.1 Specifications. 74
6.6.1.2 Available Sizes. 74
6.6.1.3 Characteristics. 77
6.6.1.4 Operation. 77
6.6.2 High Silicon Cast Iron. 78
6.6.3 High Silicon Chromium Bearing Cast Iron (HSCBCI). 78
6.6.3.1 Specifications. 78
6.6.3.2 Available Sizes. 79
6.6.3.3 Operation. 79
6.6.4 Aluminum. 79
6.6.5 Platinum. 79
6.6.6 Platinized Anodes. 79
6.6.6.1 Types. 90
6.6.6.2 Operation. 91
6.6.7 Alloyed Lead. 91
6.7 Other System Components. 91
6.7.1 Connecting Cables. 91
6.7.1.1 Factors to be Considered. 91
6.7.1.2 Insulation. 92
6.7.1.3 Recommended Cables for Specific Applications. 93
6.7.1.4 Economic Wire Size. 93
6.7.2 Wire Splices and Connections. 94
6.7.3 Test Stations. 96
6.7.4 Bonds. 96
6.7.5 Insulating Joints. 96

Section 7 SACRIFICIAL ANODE SYSTEM DESIGN
7.1 Theory of Operation. 113
7.1.1 Advantages of Sacrificial Anode Cathodic Protection Systems. 113
7.1.2 Disadvantages of Sacrificial Anode Cathodic Protection Systems. 113
7.2 Sacrificial Anode Cathodic Protection System DesignProcedures. 113
7.3 Determination of Current Required for Protection. 114
7.4 Determination of Anode Output. 114
7.4.1 Simplified Method for Common Situations. 114
7.4.2 Determination of Output Using Anode-to-Electrolyte Resistance. 114
7.4.2.1 Calculation of Anode-to-Electrolyte Resistance. 114
7.4.2.2 Determination of Structure-to-Electrolyte Resistance. 115
7.4.2.3 Connecting Cable Resistance. 115
7.4.2.4 Resistance of Connections and Splices. 115
7.4.2.5 Total Circuit Resistance. 115

Page
7.4.2.6 Anode-to-Structure Potential. 115
7.4.2.7 Anode Output Current. 115
7.4.3 Field Measurement of Anode Output. 116
7.5 Determination of Number of Anodes Required. 116
7.6 Determination of Anode Life. 116
7.7 Seasonal Variation in Anode Output. 117
7.8 Sacrificial Anode Materials 117
7.8.1 Magnesium. 117
7.8.1.1 Composition. 118
7.8.1.2 Anode Efficiency. 118
7.8.1.3 Potentials. 119
7.8.1.4 Sizes. 119
7.8.1.5 Current Output. 119
7.8.1.6 Backfill. 119
7.8.2 Zinc. 119
7.8.2.1 Composition. 125
7.8.2.2 Anode Efficiency. 125
7.8.2.3 Potentials. 125
7.8.2.4 Sizes. 126
7.8.2.5 Current Output. 126
7.8.2.6 Backfill. 126
7.8.3 Aluminum. 126
7.8.3.1 Composition. 127
7.8.3.2 Anode Efficiency. 127
7.8.3.3 Potentials. 127
7.8.3.4 Sizes. 127
7.8.3.5 Current Output. 127
7.9 Other System Components 127
7.9.1 Connecting Wires. 127
7.9.1.1 Determination of Connecting Wire Size and Type. 133
7.9.2 Connections and Splices. 134
7.9.3 Bonds and Insulating Joints. 134
7.9.4 Test Station Location and Function. 134
7.9.5 Backfill. 135

Section 8 TYPICAL CATHODIC PROTECTION
8.1 Diagrams of Cathodic Protection Systems. 137

Section 9 CATHODIC PROTECTION SYSTEM DESIGN EXAMPLES
9.1 Introduction. 155
9.2 Elevated Steel Water Tank. 155
9.2.1 Design Data 156
9.2.2 Computations 156
9.3 Elevated Water Tank (Where Ice is Expected). 173
9.3.1 Design Data 176
9.3.2 Computations 176
9.4 Steel Gas Main. 177
9.4.1 Design Data 180
9.4.2 Computations 180
9.5 Gas Distribution System. 184
9.5.1 Design Data 185
9.5.2 Computations 185

Page

9.6 Black Iron, Hot Water Storage Tank. 187
9.6.1 Design Data 188
9.6.2 Computations 188
9.7 Underground Steel Storage Tank. 190
9.7.1 Design Data 190
9.7.2 Computations 192
9.8 Heating Distribution System. 192
9.8.1 Design Data 192
9.8.2 Computations 193
9.8.3 Groundbed Design 194
9.8.4 Rectifier Location. 195
9.9 Aircraft Multiple Hydrant Refueling System. 195
9.9.1 Design Data 195
9.9.2 Computations. 196
9.10 Steel Sheet Piling in Seawater (Galvanic nodes). 199
9.10.1 Design Data 199
9.10.2 Computations 201
9.11 Steel Sheet Piling in Seawater (Impressed Current
9.11.1 Design Data. 203
9.11.2 Computations 203
9.12 Steel H Piling in Seawater (Galvanic Anodes). 207
9.12.1 Design Data 208
9.12.2 Computations 208
9.13 Steel H Piling in Seawater (Impressed Current). 210
9.13.1 Design Data 210
9.13.2 Computations 210

Section 10 INSTALLATION AND CONSTRUCTION PRACTICES
10.1 Factors to Consider. 213
10.2 Planning of Construction. 213
10.3 Pipeline Coating. 213
10.3.1 Over-the-Ditch Coating. 213
10.3.2 Yard Applied Coating. 213
10.3.3 Joint and Damage Repair. 214
10.3.4 Inspection. 214
10.4 Coatings for Other Structures. 214
10.5 Pipeline Installation. 214
10.5.1 Casings. 214
10.5.2 Foreign Pipeline Crossings. 215
10.5.3 Insulating Joints. 215
10.5.4 Bonds. 216
10.6 Electrical Connections. 216
10.7 Test Stations. 216
10.8 Sacrificial Anode Installation. 216
10.8.1 Vertical. 216
10.8.2 Horizontal. 217
10.9 Impressed Current Anode Installation. 217
10.9.1 Vertical. 219
10.9.2 Horizontal. 219
10.9.3 Deep Anode Beds. 219
10.9.4 Other Anode Types. 225
10.9.5 Connections. 225

Page

10.10 Impressed Current Rectifier Installation. 225

Section 11 SYSTEM CHECKOUT AND INITIAL ADJUSTMENTS
11.1 Introduction. 229
11.2 Initial Potential Survey. 229
11.3 Detection and Correction of Interference. 229
11.4 Adjustment of Impressed Current Systems. 229
11.4.1 Uneven Structure-To-Electrolyte Potentials. 229
11.4.2 Rectifier Voltage and Current Capacity. 230
11.5 Adjustment of Sacrificial Anode Systems. 230
11.5.1 Low Anode Current Levels. 230
11.5.2 Inadequate Protection at Designed Current Levels 230

Section 12 MAINTAINING CATHODIC PROTECTION
12.1 Introduction. 231
12.2 Required Periodic Monitoring and Maintenance. 231
12.3 Design Data Required for System Maintenance. 231
12.3.1 Drawings. 231
12.3.2 System Data. 231
12.3.2.1 Design Potentials. 231
12.3.2.2 Current Output. 231
12.3.2.3 System Settings and Potential Readings. 231
12.3.2.4 Rectifier Instructions. 232
12.4 Basic Maintenance Requirements. 232
12.5 Guidance for Maintenance 232
12.5.1 Agency Maintenance and Operations Manuals. 232
12.5.2 DOT Regulations. 235
12.5.3 NACE Standards. 235

Section 13 ECONOMIC ANALYSIS
13.1 Importance of Economic Analysis. 237
13.2 Economic Analysis Process. 237
13.2.1 Define the Objective. 237
13.2.2 Generate Alternatives. 238
13.2.3 Formulate Assumptions. 238
13.2.4 Determine Costs and Benefits. 238
13.2.4.1 Costs. 238
13.2.4.2 Benefits. 239
13.2.5 Compare Costs and Benefits and Rank Alternatives. 239
13.2.6 Perform Sensitivity Analysis. 239
13.3 Design of Cathodic Protection Systems. 239
13.4 Economic Analysis - Example 1 240
13.4.1 Objective. 240
13.4.2 Alternatives 240
13.4.3 Assumptions 240
13.4.4 Cost/Benefit Analysis 240
13.4.4.1 Cost - Alternative 1--Steel Line Without Cathodic Protection. 240
13.4.4.2 Cost - Alternative 2--Steel Line with Cathodic Protection. 242
13.4.4.3 Cost - Alternative 3--Plastic Line. 242
13.4.4.4 Benefits. 243

Page

13.4.5 Compare Costs/Benefits 243
13.5 Economic Analysis - Example 2 243
13.5.1 Objective. 243
13.5.2 Alternative 243
13.5.3 Assumptions 243
13.5.4 Cost/Benefit Analysis 244
13.5.4.1 Cost - Alternative 1--Steel Line Without Cathodic Protection. 244
13.5.4.2 Cost - Alternative 2--Steel Line With Cathodic Protection. 245
13.5.4.3 Benefits. 246
13.5.5 Compare Costs/Benefits 246
13.5.6 Conclusions and Recommendations. 247
13.6 Economic Analysis - Example 3 247
13.6.1 Objective. 247
13.6.2 Alternatives 247
13.6.3 Assumptions 247
13.6.4 Cost/Benefit Analysis 247
13.6.4.1 Cost - Alternative 1--Impressed Current Cathodic Protection. 247
13.6.4.2 Cost - Alternative 2--Galvanic Anode System. 248
13.6.5 Compare Costs/Benefits 249
13.7 Economic Analysis - Example 4 249
13.7.1 Objective 249
13.7.2 Alternatives 249
13.7.3 Assumptions 249
13.7.4 Cost/Benefit Analysis 249
13.7.4.1 Cost - Alternative 1--Cathodic Protection System Maintenance Continued. 249
13.7.4.2 Cost - Alternative 2--Cathodic Protection System Maintenance Discontinued. 250
13.7.5 Compare Benefits and Costs 251
13.8 Economic Analysis Goal. 251

Section 14 CORROSION COORDINATING COMMITTEE PARTICIPATION
14.1 Introduction. 253
14.2 Functions of Corrosion Coordinating Committees. 253
14.3 Operation of the Committees. 253
14.4 Locations of Committees. 253

APPENDIX

APPENDIX A UNDERGROUND CORROSION SURVEY CHECKLIST 255
B ECONOMIC LIFE GUIDELINES 265
C PROJECT YEAR DISCOUNT FACTORS 267
D PRESENT VALUE FORMULAE 269
E DOT REGULATIONS 271

FIGURES

Page

Figure 1 The Electrochemical Cell 6
2 Corrosion Cell - Zinc and Platinum in Hydrochloric Acid 6
3 Cathodic Protection Cell 7
4 Hydraulic Analogy of Cathodic Protection 7
5 Sacrificial Anode Cathodic Protection/Impressed Current Cathodic Protection 9
6 Structure-to Electrolyte Potential Measurement 14
7 Failure Rate Versus Time 17
8 Temporary Cathodic Protection System for Determining Current Requirements 23
9 4-Pin Soil Resistivity Measurement 30
10 Soil Box for Determination of Resistivity 30
11 pH Meter 32
12 Antimony Electrode Potential Versus pH 32
13 Coating Conductance - Short Line Method 34
14 Coating Conductance - Long Line Method 34
15 Continuity Testing - Potential Method 36
16 Continuity Testing - Potential Drop Method 36
17 Continuity Testing - Pipe Locator Method 37
18 Insulation Testing - Two-Wire Test Station 37
19 Interference from Impressed Current Cathodic Protection System 40
20 Interference Due to Potential Gradients 41
21 Interference Testing 42
22 Plot of Potentials from Interference Test 42
23 Measurement of Current Flow in Structure 44
24 Correction of Interferencce - Direct Bonding 44
25 Correction of Interference - Resistive Bonding 45
26 Effects of Bonding on Interference Test Potentials 46
27 Bonding for Continuity 48
28 Control of Interference - Sacrificial Anode 48
29 Interference Due to Cathodic Protection of Quaywall 50
30 Correction of Interference - Bonding 51
31 Equavalent Cathodic Protection Circuit 54
32 Single-Phase - Full-Wave Bridge Rectifier 62
33 Full-Wave Rectified Current 64
34 Single-Phase - Center Tap Circuit 64
35 Three-Phase Bridge Circuit 65
36 Three-Phase Wye Circuit 66
37 Half-Wave Rectified Current 66
38 Constant Current Rectifier 67
39 Constant Potential Rectifier 67
40 Multicircuit Constant Current Rectifier 68
41 Efficiency Versus Voltage - Selenium Stacks 72
42 Efficiency Versus Voltage - Silicon Stacks 73
43 Anode-to-Cable Connection - Graphite Anode 75
44 Center Connected Graphite Anode 76
45 Duct Anode 83
46 Button Anode 83

Page

47 Bridge Deck Anode - Type I 84
48 Bridge Deck Anode - Type II 85
49 Tubular Anode 86
50 Anode to Cable Connection - Epoxy Seal 87
51 Anode to Cable Connection - Teflon Seal 88
52 Center Connected High Silicon Chromium Bearing Cast Iron Anode 89
53 Typical Platinized Anode 90
54 Flush-Mounted Potential Test Station 97
55 Soil Contact Test Station 98
56 IR Drop Test Station 99
57 Insulating Flange Test Station (Six-Wire) 100
58 Wiring for Casing Isolation Test Station 101
59 Bond Test Station 101
60 Anode Balancing Resistors 102
61 Bonding of a Dresser-Style Coupling 103
62 Bonding Methods for Cast Iron Bell-and-Spigot Pipe 104
63 Isolating a Protected Line from an Unprotected Line 105
64 Electrical Bond 106
65 Thermosetting-Resin Pipe Connection 106
66 Clamp Type Bonding Joint 107
67 Underground Splice 108
68 Welded Type Bonding Joint for Slip-On Pipe Installed Aboveground 109
69 Test Box for an Insulating Fitting 110
70 Steel Insulating Joint Details for Flanged Pipe Installed Below Grade 111
71 Steel Insulating Joint Details for Aboveground Flanged Pipe 112
72 Insulating Joint Details for Screwed Pipe Connections 112
73 Efficiency Versus Current Density - Magnesium Anodes 118
74 Aluminum Alloy Bracelet Anodes 133
75 Current-Potential Test Station 135
76 Typical Building Underground Heat & Water Lines 138
77 Impressed Current Point Type Cathodic Protection for Aircraft Hydrant Refueling System 138
78 Galvanic Anode Type Cathodic Protection for Coated Underground Sewage Lift Station 139
79 Zinc Anode on Reinforced Concrete Block 140
80 Radiant Heat or Snow-Melting Piping 141
81 Cathodic Protection of Foundation Piles 142
82 Impressed Current Cathodic Protection for Existing On-Grade Storage Tank 142
83 Impressed Current Cathodic Protection with Horizontal Anodes for On-Grade Storage Tank - New Installation 143
84 On-Grade Fresh Water Tank Using Suspended Anodes 144
85 Open Water Box Cooler 144
86 Horizontal Hot Water Tank - Magnesium Anode Installation 145

Page

87 Impressed Current Cathodic Protection System for Sheet Piling for Wharf Construction 146
88 Suspended Anode Cathodic Protection for H-Piling in Seawater 146
89 Cathodic Protection for H-Piling in Seawater 147
90 Cellular Earth Fill Pier Supports 148
91 Elevated Fresh Water Tank Using Suspended Anodes 149
92 Cathodic Protection of Tanks using Rigid Floor-Mounted Anodes 150
93 Cathodic Protection of Hydraulic Elevator Cylinders 151
94 Hydraulic Hoist Cylinder 152
95 Typical Cathodic Protection of Underground Tank Farm 153
96 Gasoline Service Station System 154
97 Segmented Elevated Tank for Area Calculations 157
98 Anode Spacing for Elevated Steel Water Tank 160
99 Anode Suspension Arrangement for Elevated Steel Water Tank 162
100 Equivalent Diameter for Anodes in a Circle in Water Tank 163
101 Fringe Factor for Stub Anodes 164
102 Elevated Steel Water Tank Showing Rectifier and Anode Arrangement 172
103 Hand Hole and Anode Suspension Detail for Elevated Water Tank 174
104 Riser Anode Suspension Detail for Elevated Water Tank 174
105 Dimensions: Elevated Steel Water Tank 175
106 Cathodic Protection for Tanks Using Rigid Mounted 178
Button-Type Anodes and Platinized Titanium Wire
107 Cathodic Protection System for Gas Main 179
108 Layout of Gas Piping in Residential District 184
109 Cathodic Protection for Black Iron, Hot Water Storage Tank 187
110 Galvanic Anode Cathodic Protection of Underground Steel Storage Tank 191
111 Impressed Current Cathodic Protection for Heating Conduit System 193
112 Galvanic Anode Cathodic Protection for Hydrant Refueling System 197
113 Galvanic Anode Cathodic Protection System for Steel Sheet Piling Bulkhead 200
114 Impressed Current Cathodic Protection System for Steel Sheet Piling Bulkhead 207
115 Pier Supported by H Piling for Para. 9.12 208
116 Test Station for Under-Road Casing Isolation 215
117 Vertical Sacrificial Anode Installation 217
118 Horizontal Sacrificial Anode Installation When Obstruction is Encountered 218
119 Horizontal Sacrificial Anode Installation - Limited Right-of-Way 218
120 Vertical HSCBCI Anode Installation 220

Page

121 Vertical HSCBCI Anode Installation With Packaged Backfill 221
122 Horizontal HSCBCI Anode Installation 222
123 Typical Deep Well Anode Cathodic Protection Installation 223
124 Deep Anode Installation Details 224
125 Typical Pole-Mounted Cathodic Protection Rectifier Installation 226
126 Typical Pad-Mounted Cathodic Protection Rectifier Installation 227
127 Form for Recording and Reporting Monthly Rectifier Readings 233
128 Form for Recording and Reporting Quarterly Structure-to-Electrode Potentials 234

TABLES

Table 1 Current Requirements for Cathodic Protection of Bare Steel 20
2 Current Requirements for Cathodic Protection of Coated Steel 21
3 Galvanic Anode Size Factors 25
4 Structure Potential Factor 26
5 Adjusting Factor for Multiple Anodes (F) 27
6 Corrections Factors - Short Line Coating Conductance 33
7 Results of Structure-to-Electrolyte Potential Measurements 43
8 Standard HSCBCI Anodes 80
9 Special HSCBCI Anodes 82
10 Standard Wire Characteristics 92
11 M Factors for Determining Economic Wire Size (Cost of losses in 100 feet of copper cable at 1 cent per kWhr) 95
12 Standard Alloy Magnesium Anodes - Standard Sizes for Use in Soil 120
13 Standard Alloy Magnesium Anodes - Standard Sizes for Use in Water 121
14 Standard Alloy Magnesium Anodes -Standard Sizes for Condensors and Heat Exchangers 121
15 Standard Alloy Magnesium Anodes - Elongated 122
16 High Potential Alloy Magnesium Anodes - Standard Sizes for Soil and Water 122
17 Standard Alloy Magnesium Anodes - Standard Size Extruded Rod for Water Tanks and Water Heaters 123
18 Zinc Anodes - Standard Sizes for Underground or Fresh Water 123
19 Zinc Anodes - Special Sizes for Underground or Fresh Water 124
20 Zinc Anodes - Standard Sizes for Use in Seawater 124
21 Zinc Anodes - Special Sizes for Use in Seawater 125
22 Aluminum Pier and Piling Anodes - Standard Sizes 128

Page

23 Type I Aluminum Alloy Anodes - Standard Sizes for Offshore Use 129
24 Type III Aluminum Alloy Anodes for Offshore Use 130
25 Aluminum Alloy Hull Anodes - Standard Sizes (Types I, II, and III) 132
26 Aluminum Alloy Bracelet Anode - Standard Sizes 133
27 Technical Data - Commonly Used HSCBCI Anodes 161

REFERENCES 287

GLOSSARY 289

THIS PAGE INTENTIONALLY LEFT BLANK

Section 1: INTRODUCTION

1.1 Scope. This handbook shall be used for the engineering design of cathodic protection systems. Specifically described and discussed are criteria for cathodic protection, system design principles, system examples and their design steps, and economic analysis. To facilitate user application, sections on installation and construction practices, system checkout and initial adjustment, and system maintenance are included.

1.2 Cancellation. This handbook supersedes the cathodic protection information of DM-4.06, Lightning and Cathodic Protection of December 1979.

1.3 Related Technical Documents. The following publications should be obtained to use with this document:

a) National Association of Corrosion Engineers (NACE) Standard RP-01-69 (1983 Rev), Recommended Practice for Control of External Corrosion on Underground or Submerged Piping Systems.

b) NACE Standard RP-02-85, Control of External Corrosion on Metallic Buried, Partially Buried, or Submerged Liquid Storage Systems.

c) NACE Standard RP-50-72, Design, Installation and Maintenance of Impressed Current Deep Groundbeds.

d) Naval Facilities Engineering Command (NAVFAC) P-442, Economic Analysis Handbook.

THIS PAGE INTENTIONALLY LEFT BLANK

Section 2: CATHODIC PROTECTION CONCEPTS

2.1 Corrosion as an Electrochemical Process. Corrosion of metals is a result of electrochemical reactions. An electrochemical reaction is a chemical reaction accompanied by a flow of electrical current.

2.1.1 Driving Force. The driving force for the corrosion of metals through electrochemical reactions is the free energy of the metal atoms in their metallic form. All chemical systems tend to change so that the free energy present is at a minimum. This is analogous to the flow of water downhill to minimize the free energy due to gravity. Most engineering metals are found in nature in a form with low free energy. These metal ores are chemical compounds consisting of the metal atoms combined with other atoms such as oxygen or sulfur. The process of breaking up these ores into their metallic and non-metallic atoms involves an addition of energy in order to free the metal atoms from the natural, low energy content chemical compounds. The corrosion process is driven by the tendency of these metal atoms to revert to their natural state. If corrosion products are analyzed, their chemical composition is usually identical to the ore from which the metal was originally obtained.

2.1.2 The Electrochemical Cell. Electrochemical reactions occur through a combination of chemical reactions and the exchange of electrical charges (current) between areas where these chemical reactions are occurring. The entire process is commonly known as an electrochemical cell. This process is described in the following paragraphs.

2.1.2.1 Components of the Electrochemical Cell. Every electrochemical cell consists of an anode, a cathode, an electrolyte and a metallic path for the flow of electrical current between the anode and cathode. A schematic electrochemical cell is shown in Figure 1.

2.1.2.2 Reactions in an Electrochemical Cell. Chemical oxidation occurs at the anode in an active electrochemical cell. Chemical oxidation is a reaction where an atom or molecule gives up electrons. The chemical shorthand for a typical oxidation reaction is:

EQUATION: $$M^o \rightarrow M^+ + e^- \qquad (1)$$

where

M^o = metal atom
M^+ = metal ion
e^- = electron

In this reaction the metal atom, which in combination with the other atoms in a piece of metal has high strength and other metallic properties, is transformed into a metal ion which usually dissolves. The electron is available for transfer to another site of lower electrical potential.

At the cathode in an active electrochemical cell, chemical reduction occurs. Chemical reduction is a reaction where an atom or molecule gains electrons. The chemical shorthand for a typical reduction reaction is:

EQUATION: $$R^{+} + e^{-} \rightarrow R^{o} \qquad (2)$$

where

R^{+} = positive ion in solution
e^{-} = electron
R^{o} = reduced atom

A reduced atom may either be discharged as a gas or may be deposited on the cathode. The electrolyte in an electrochemical cell serves as a source of material for the chemical reactions, a medium for the deposition of the products of the chemical reactions, and a path for the flow of charged ions in solution. The electron path, usually a metallic connection, is required so that the electrons produced at the anode can flow from the anode to the sites at the cathode where they are consumed. The electrochemical cell consists of an anode where electrons are produced by a chemical reaction, a cathode where electrons are consumed by a chemical reaction different than the one occurring at the anode, an electrolyte for the flow of ions, and a metallic path for the flow of electrons (dc current).

Figure 2 shows an example of a corrosion cell where zinc is connected to platinum in hydrochloric acid. The zinc corrodes at the anode, hydrogen gas forms at the cathode, and electric current flows through the external electron path. This electric current can be made to do useful work. An ordinary dry cell battery is an electrochemical cell. When in storage, the electron path is not completed and the electrochemical reaction which produces the current is only allowed to proceed when the external metallic path is completed.

2.2 The Electrochemical Basis for Cathodic Protection. Cathodic protection utilizes a flow of direct current electricity to interfere with the activity of the electrochemical cell responsible for corrosion. As shown in Figure 3, corrosion can be prevented by coupling a metal with a more active metal when both are immersed in an electrolyte and connected with an external path. In this case the entire surface of the metal being protected becomes a cathode; thus the term "cathodic protection."

2.2.1 Potentials Required for Cathodic Protection. Every metal immersed in an electrolyte develops an electrochemical potential due to the free energy of the atoms in the metal. In order to prevent anodic reactions from occurring due to electrochemical reactions on that metal, electrons must be prevented from leaving the metal. Since electrons can only flow from an area of high (negative) potential to an area with lower (negative) potential, connection of the metal to be protected to a source of more negative electrons can effectively prevent the anodic reaction on the metal to be protected and can thus prevent corrosion. In this case, the flow of electrons is from the external source to the metal being protected. Conventional current flow is described by the flow of imaginary positive charges in a direction opposite the electron flow.

Since cathodic protection depends on the energy of electrons and their tendency to flow only from an area of high (negative) potential to one of lower (negative) potential, the principle of cathodic protection can also be demonstrated through a hydraulic analogy (see Figure 4). In this analogy the surge tank is the metal to be protected. Flow from the surge tank is prevented by coupling the tank to a supply of water at higher pressure, leaving the tank full.

2.3 Practical Application of Cathodic Protection. Cathodic protection is only one of many methods of corrosion control. Cathodic protection should be evaluated as one alternative method to control corrosion in an overall corrosion control program. Application of cathodic protection should be evaluated on the basis of technical feasibility, economic analysis, and system functional requirements such as reliability and consequence of failure. In some cases (e.g., underground pipelines), field experience has shown that cathodic protection is such an effective means of providing the required levels of safety in the operation of the systems that cathodic protection is required by Federal regulation.

2.3.1 When Cathodic Protection Should Be Considered. Cathodic protection should be considered, possibly in conjunction with other forms of corrosion control such as the application of protective coatings, wherever the system is exposed to an aggressive environment in such a manner that cathodic protection is technically and economically feasible.

2.3.1.1 Where Feasible. Cathodic protection is primarily feasible when the surfaces to be protected are buried or submerged. External surfaces of buried metallic structures, surfaces of metal waterfront structures such as sheet pilings or bearing piles, and the internal surfaces of tanks containing electrolytes such as water are applications where cathodic protection is usually technically feasible and is commonly utilized in protecting such structures. Cathodic protection has limited applicability on internal surfaces of small diameter pipelines and other areas where ion flow in the electrolyte is restricted by electrolyte resistance.

2.3.1.2 When Indicated By Experience. When construction of a new buried or submerged system is being planned, the corrosivity of the environment should be considered as one of the factors in the design of the system. If experience with similar systems in the vicinity of the construction site has shown that the site conditions are aggressive based upon leak and failure records, cathodic protection should be provided as a means of controlling corrosion on the new system. Cathodic protection is one of the few methods of corrosion control that can be effectively used to control corrosion of existing buried or submerged metal surfaces. Thus, if leak records on an existing system show that corrosion is occurring, cathodic protection may be applied to stop the corrosion damage from increasing. Cathodic protection can, however, only stop further corrosion from occurring and cannot restore the material already lost due to corrosion.

2.3.1.3 As Required By Regulation. Regulations by the Department of Transportation (DOT) have established standards for the transportation of certain liquids and compressed gas by pipelines in order to establish minimum levels of safety. These regulations require that these pipelines be protected by cathodic protection combined with other means of corrosion control such as

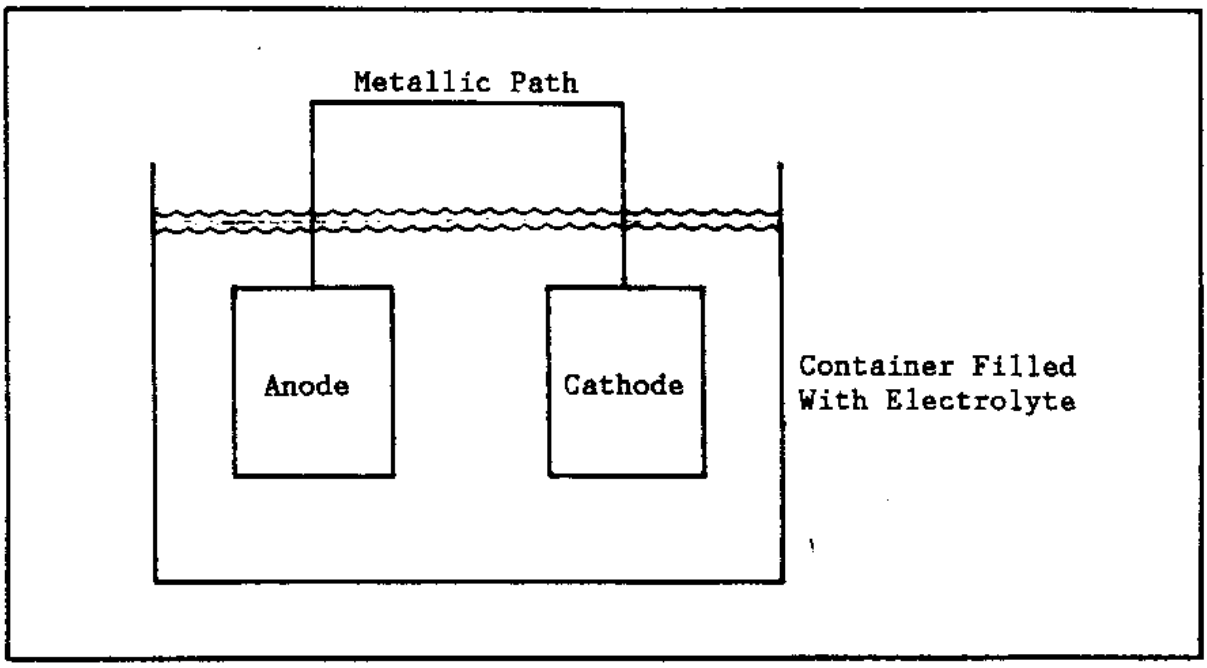

Figure 1
The Electrochemical Cell

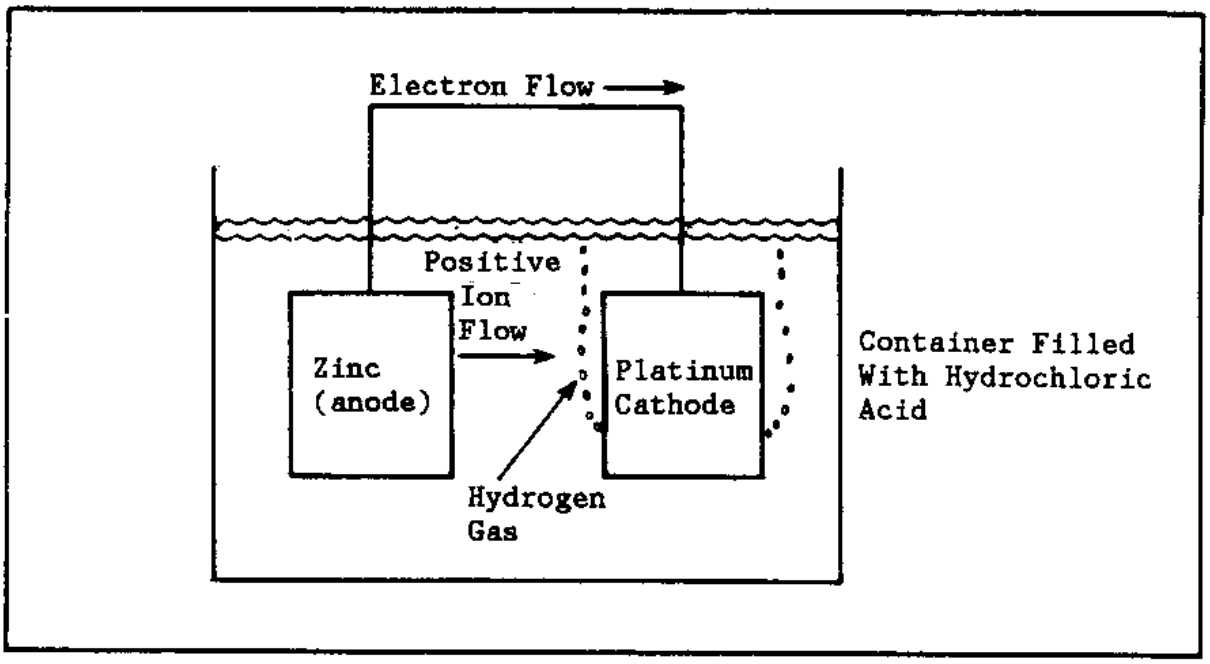

Figure 2
Corrosion Cell - Zinc and Platinum
in Hydrochloric Acid

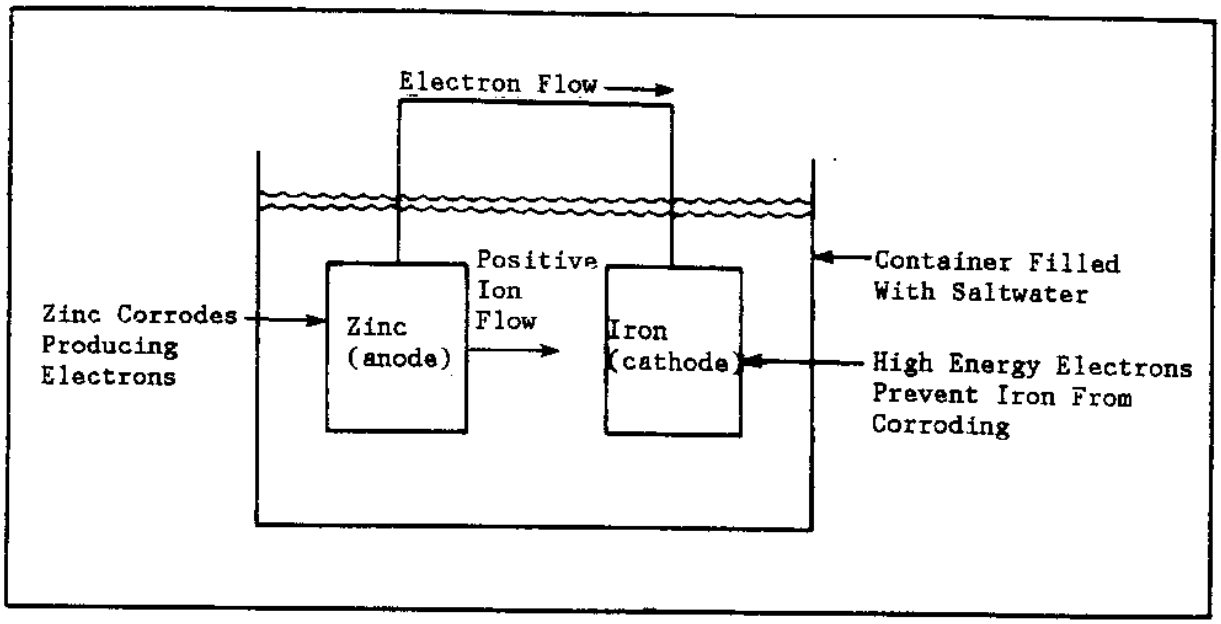

Figure 3
Cathodic Protection Cell

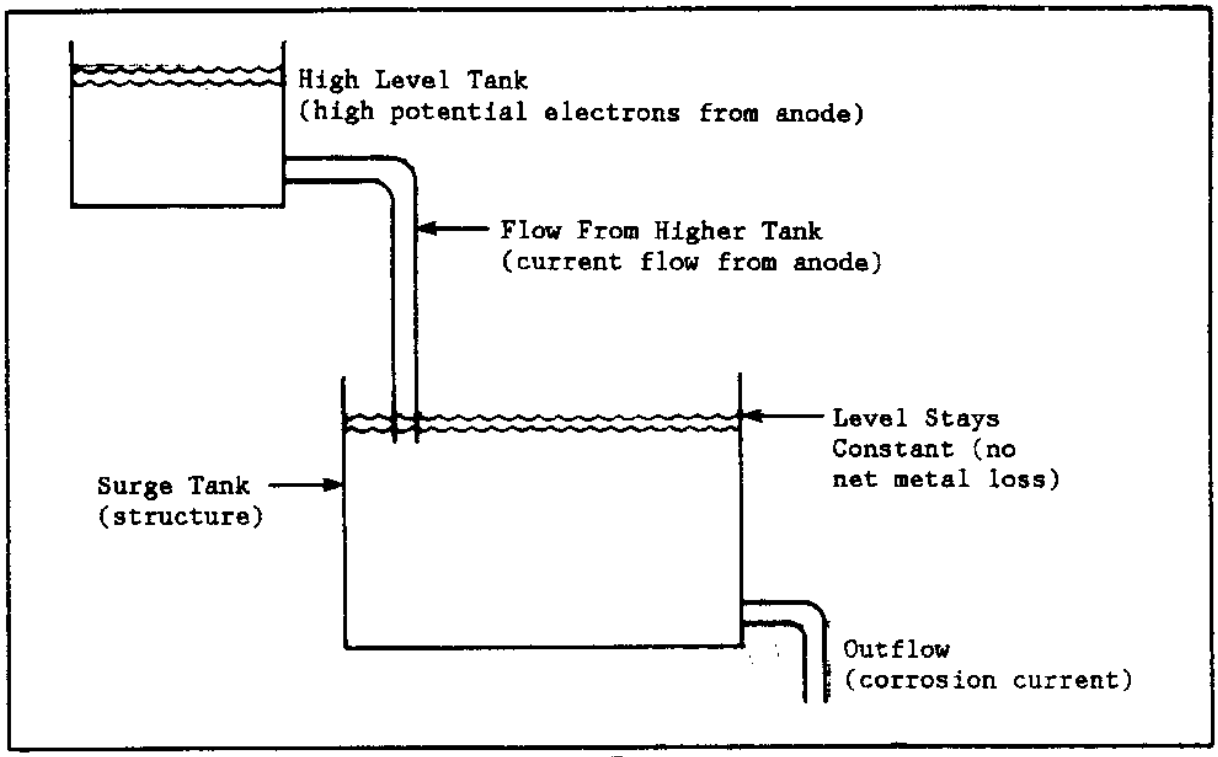

Figure 4
Hydraulic Analogy of Cathodic Protection

protective coatings and electrical insulation. These regulations provide excellent guidelines for the application of cathodic protection to buried and submerged pipelines. The pertinent sections of these regulations are included herein as Appendix E.

Due to the safety and environmental consequences of system failure, there are also increasing numbers of federal, state, and local governmental regulations regarding the storage and transportation of certain materials that require corrosion control. Many of these regulations either make the application of cathodic protection mandatory on existing facilities as a primary means of corrosion control or allow it to be selected as a means for the mandatory control of corrosion on new facilities.

2.3.2 Functional Requirements for Cathodic Protection. In order to be technically feasible, cathodic protection requires that the protected structure be electrically continuous and immersed in an electrolyte of sufficient volume to allow the distribution of current onto the structure.

2.3.2.1 Continuity. Electrical continuity of the structure to be protected may be through metallic continuity provided by bolting, or welding of the structure. Continuity is often achieved or insured by means of electrical connections installed specifically to insure the effectiveness of cathodic protection. These connections are commonly called "bonds."

2.3.2.2 Electrolyte. The electrolyte is commonly water or the water contained in moist earth. The conductivity of the electrolyte is an important factor in the determination of the need for cathodic protection and in the design of cathodic protection systems.

2.3.2.3 Source of Current. Cathodic protection also requires the presence of a source of electrical current at the proper voltage or potential to prevent attack on the structure. These sources of current are commonly called "anodes." As described below, the anodes may be fabricated from an active metal such as magnesium, or zinc which provides a high potential source of electrons through corrosion on its surface. The anodes may also be fabricated from a relatively inert material which has the ability to pass current from its surface without being consumed at a high rate but which requires the use of an external energy source to increase the potential of the electrons supplied to the structure being protected. Anodes made from active metal are commonly called "sacrificial" or "galvanic" anodes, as the anode material is sacrificed to protect the structure under protection. The inert anodes are commonly called "impressed current" anodes as the external energy source is used to impress a current onto the structure under protection.

2.3.2.4 Connection to Structure. The anodes must be electrically connected to the structure through a metallic connection in order to complete the circuit of the electrochemical cell responsible for the protection of the structure.

2.4 Sacrificial Anode Systems. Cathodic protection in the sacrificial anode system is essentially a controlled electrochemical cell (see Figure 5). Corrosion on the protected structure is shifted to the anode. The anode is consumed in the process but is designed and installed so that it is easily replaced when consumed. Anode life of 10 to 15 years is common. Anode life is dependent upon the amount of current emitted by the anodes and their size. If the cathodic protection system is properly designed and installed, and if it is properly maintained (including periodic replacement of anodes as necessary), the structure being protected is essentially immune to corrosive attack and its lifetime is limited by other factors such as mission requirements or mechanical damage.

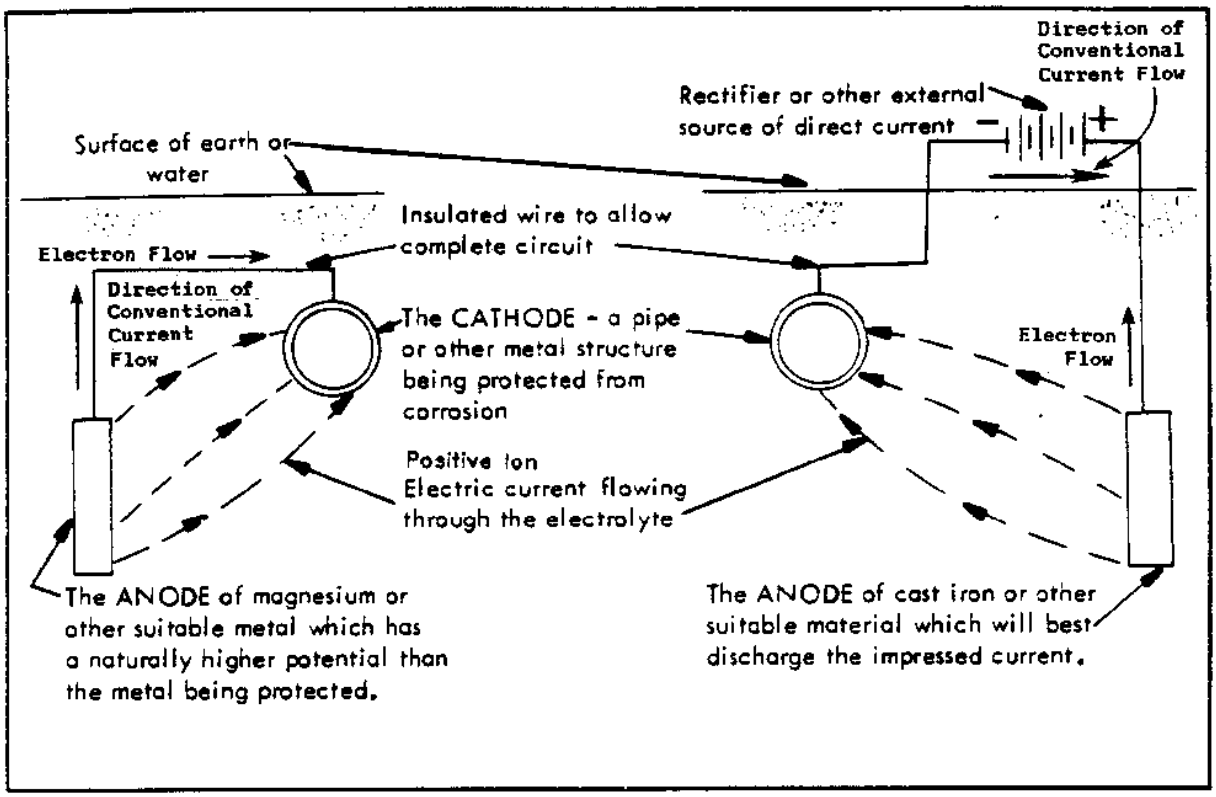

Figure 5
Sacrificial Anode Cathodic Protection/
Impressed Current Cathodic Protection

2.4.1 Anode Materials. The materials used for sacrificial anodes ar either relatively pure active metals such as zinc or magnesium, or alloys magnesium or aluminum that have been specifically developed for use as sacrificial anodes. In applications where the anodes are buried, a speci chemical backfill material surrounds the anode in order to insure that th anode will produce the desired output.

2.4.2 Connection to Structure. Sacrificial anodes are normally supplied with either lead wires or cast-in straps to facilitate their connection to the structure being protected. The lead wires may be attached to the structure by welding or mechanical connections. These should have a low resistance and should be insulated to prevent increased resistance or damage due to corrosion. Where anodes with cast-in straps are used, the straps should be welded directly to the structure if possible, or, if welding is not possible, used as locations for attachments using mechanical fasteners. A low resistance mechanically adequate attachment is required for good protection and resistance to mechanical damage. Welded connections are preferred to avoid the increase in resistance that can occur with mechanical connections.

2.4.3 Other Requirements. As for all systems to be protected, the structure being protected by sacrificial anodes must be electrically continuous. The system should also include test stations that are used to monitor the performance and to adjust the system for proper operation. As in all mechanical and electrical systems, cathodic protection systems require periodic inspection, maintenance, and adjustment for satisfactory operation.

2.5 Impressed Current Systems. From the standpoint of the structure being protected, cathodic protection using the impressed current method is essentially the same as in the sacrificial anode system. As shown in Figure 5, the cathodic protection system supplies high energy electrons to the structure being protected and the circuit of the electrochemical cell is completed through the soil. However, in the impressed current system, a

supply of direct electrical current is used to develop the potential difference between the anode and the structure being protected. Consumption of the anode is not the driving force for the flow-protective current. A properly designed, installed, and maintained impressed current cathodic protection system is as effective as the galvanic anode type of system in preventing corrosion of the structure being protected.

2.5.1 Anode Materials. The materials commonly used for impressed current cathodic protection have the capability of passing a current into the environment without being consumed at a high rate. Graphite and high silicon cast iron are the most commonly used impressed current cathodic protection anode materials; however, other materials such as magnetite, platinum, and newly developed oxide coated ceramic materials have been successfully used. For buried anodes, a backfill consisting of carbonaceous material is normally used: to decrease the electrical resistance of the anode; to provide a uniform, low resistivity environment surrounding the anode; and to allow for the venting of gasses produced at the anode surface.

2.5.2 Direct Current Power Source. The supply of direct electrical current used to develop the potential difference between the anode and the structure being protected is normally a rectifier which changes alternating current to direct current of the appropriate voltage and current output. However, in special applications, other direct current power sources such as solar cells, thermoelectric cells, motor-generator sets, and wind-driven generators may be used.

2.5.3 Connection to Structure. Impressed current cathodic protection anodes are normally supplied with integral lead wires. In impressed current cathodic protection systems, the anodes are connected to the positive terminal of the rectifier and a wire connection is made between the negative terminal of the rectifier and the structure to be protected. The lead wires are connected to the cathodic protection system by welding or mechanical connections. These should have a low resistance and should be insulated to prevent increased resistance or damage due to corrosion. In applications where multiple anodes are used, the individual anode lead wires are often attached to a larger header cable which is connected to the rectifier. As the wire between the rectifier and the anode is under a high positive potential, very rapid attack of the wire will occur where there is a break in the wire insulation and the wire comes in direct contact with the electrolyte. The insulation on this cable is very critical and high quality insulation and care in installation is required for this application.

2.5.4 Other Requirements. As for all systems to be protected, the structure being protected by impressed current must be electrically continuous. The system should also include test stations which are used to monitor the performance and to adjust the system for proper operation. As in the case of sacrificial anode systems, impressed current cathodic protection systems require periodic inspection, maintenance, and adjustment for satisfactory operation.

THIS PAGE INTENTIONALLY LEFT BLANK

Section 3: CRITERIA FOR CATHODIC PROTECTION

3.1 Introduction. Various methods are available for determining whether the structure to be protected is being effectively protected through the application of cathodic protection. The technical basis for corrosion and cathodic protection is electrochemical. Electrochemical methods of determining the effectiveness of cathodic protection systems are the most widely used criteria for establishing the adequacy of the protection. In addition to electrochemical methods, inspections to determine the actual condition of the structure being protected can be used to determine whether or not effective protection has been achieved in the past. If there is no attack of the protected system in an aggressive environment, then the protective system has been functioning adequately. For buried or submerged systems where access is restricted, the electrochemical criteria are most widely applied.

3.2 Electrical Criteria. For submerged and buried structures, criteria based upon the electrochemical potential of the surfaces of the structure to be protected are the most widely used criteria for determining whether or not the structure is being effectively protected. In making these electrochemical potential measurements, as shown in Figure 6, a high impedance voltmeter is used to measure the difference in potential between the structure and a reference electrode placed in contact with the electrolyte. For buried structures, the copper/copper sulphate reference electrode is the reference electrode most commonly used for this purpose. For structures submerged in seawater the silver/silver chloride reference electrode is commonly used. Other reference electrodes can be used when appropriate. Potential readings obtained using any given reference electrode can be related to readings obtained with other reference electrodes. In order to the assure that the potential readings obtained are properly interpreted, the reference electrode used should always be noted. Readings should be reported as "XX.XX V versus YYY" where YYY is the reference electrode used to measure the structure potential.

As these potential measurements are most commonly used to measure the potential of buried pipelines they are commonly called "pipe-to-soil potentials" even though they may refer to the wall of a water storage tank in contact with potable water. The more precise term for these measurements is "structure-to-electrolyte potential."

3.3 Interpretation of Structure-to-Electrolyte Potential Readings. In order to determine whether or not a given surface is being adequately protected, structure-to-electrolyte measurements are taken at various locations surrounding the structure. Based upon a combination of corrosion theory, experimental and laboratory tests, and more importantly, upon actual field experience with a large number of protected structures, criteria for interpreting these structure-to-electrolyte potentials have been developed.

3.3.1 National Association of Corrosion Engineers (NACE) Standard RP-01-69. The most widely used criteria for evaluating structure-to-electrolyte potentials have been included in the NACE Standard RP-01-69, Recommended Practice for Control of External Corrosion on Underground or Submerged Piping Systems.

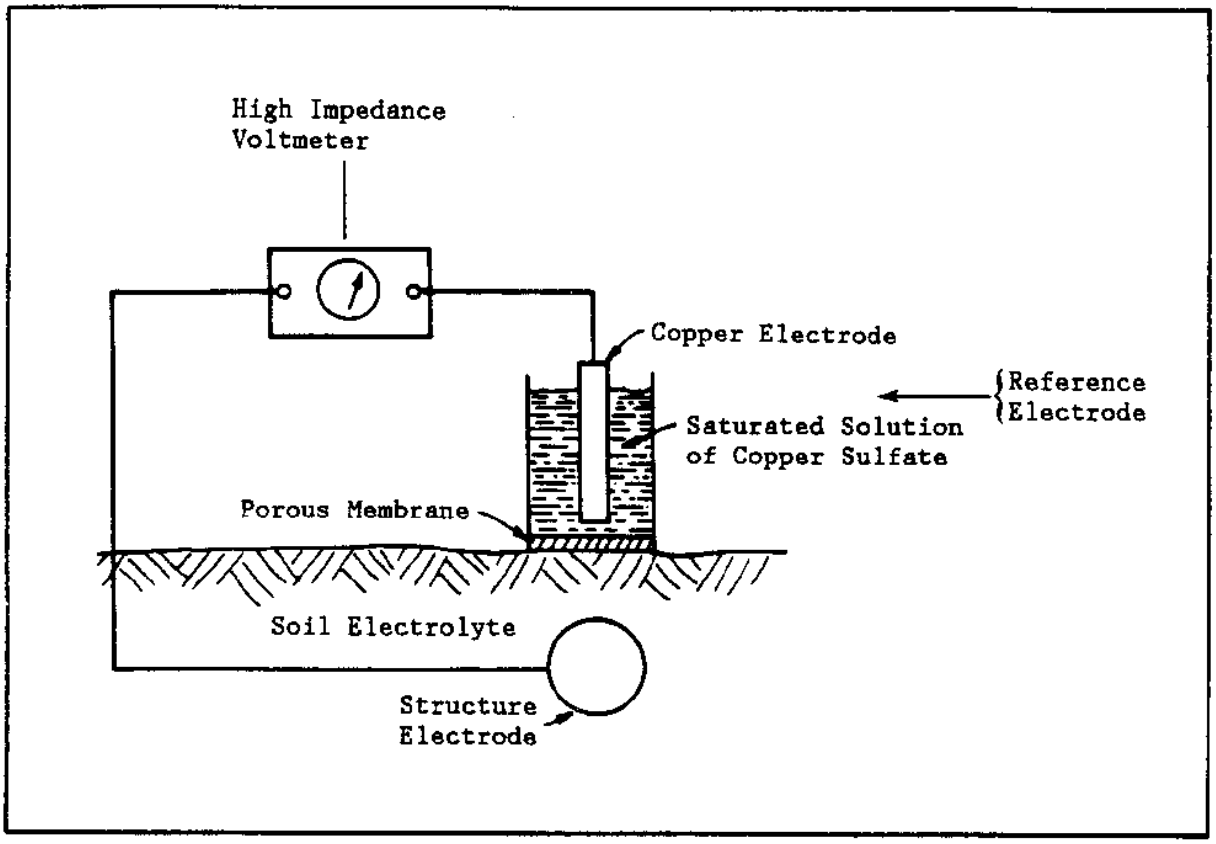

Figure 6
Structure-to Electrolyte Potential Measurement

The following information and criteria are from the 1983 revision of NACE RP-01-69.

"Voltage measurements on pipelines are to be made with the reference electrode located on the electrolyte surface as close as practicable to the pipeline. Such measurements on all other structures a to be made with the reference electrode positioned as close as feasible t the structure surface being investigated. Consideration should be given voltage (IR) drops other than those across the structure-electrolyte boundary, the presence of dissimilar metals, and the influence of other structures for valid interpretation of voltage measurements."

"No one criterion for evaluating the effectiveness of cathodic protection has proved to be satisfactory for all conditions. Often a combination of criteria is needed for a single structure."

3.3.1.1 Criteria for Steel. The criteria options for the cathodic protection of steel and cast iron in soil and water are as follows:

a) -850 mV or more negative with respect to a copper/copper sulfate reference cell. This potential is measured with the protective current applied. For valid interpretation, the potential measurements must be corrected for IR drop through the electrolyte and metallic paths.

b) 100 mV or greater negative polarization shift measured between the pipe surface and a stable reference electrode contacting the electrolyte. The formation or decay of this polarization can be used in this criterion.

c) A potential at least as negative as the potential established by the E log I curve method.

d) A net protective current from the electrolyte into the surface of the structure as determined by an earth current technique.

3.3.1.2 Criteria for Aluminum. 100 mV or greater negative polarization shift (refer to para. 3.3.1.1).

PRECAUTIONARY NOTE

Excessive Voltages: If cathodically protected at voltages more negative than -1.20 V measured between the structure surface and a saturated copper-copper sulfate reference electrode contacting the electrolyte and compensated for the voltage (IR) drops other than those across the structure-electrolyte boundary, may suffer corrosion as the result of the build-up of alkali on the metal surface. A voltage more negative than -1.20 V should not be used unless previous test results indicate no appreciable corrosion will occur in the particular environment.

Alkaline Soil Conditions: Since aluminum may suffer from corrosion under high pH conditions and since application of cathodic protection tends to increase the pH at the metal surface, careful investigation or testing should be made before applying cathodic protection to stop pitting attack on aluminum structures in environments with a natural pH in excess of 8.0.

3.3.1.3 Criteria for Copper. 100 mV or greater negative polarization shift (refer to para 3.3.1.1).

3.3.1.4 Criteria for Dissimilar Metal Structures. A negative potential equal to that required for the most anodic materials should be maintained. The potential should not exceed the maximum allowable potential for any material (such as for aluminum) in the system.

3.3.2 Other Electrical Criteria. Criteria evaluation of the structure-to-electrolyte potentials on other materials have been developed but are not included in NACE RP-01-69. The same measurement techniques and precautions are applicable to these criteria as for those in NACE RP-01-693.

3.3.2.1 Criteria for Lead. Criteria for lead shall be as follows:

a) -750 mV or more negative with respect to a copper/copper sulfate reference cell. This potential is measured with the protective current applied.

b) 100 mV or greater negative polarization shift measured between the pipe surface and a stable reference electrode contacting the electrolyte.

NOTE: With the same precautions regarding potentials over 1.2 V and contact with alkaline soils as those for aluminum.

3.3.2.2 NACE RP-02-85. Criteria for the interpretation of structure-to-electrolyte potentials on storage tanks are given in NACE RP-02-85 Control of External Corrosion on Metallic Buried, Partially Buried, or Submerged Liquid Storage Systems. The criteria in this recommended practice refer to the protection of steel structures and are essentially the same as in NACE RP-01-69.

3.4 Failure Rate Analysis. Corrosion damage, as measured by frequency of system failure, usually increases logarithmically with time after the first occurrence of corrosion failure. When effective cathodic protection is applied to a structure which has experienced corrosion damage, the frequency of failures will be significantly reduced. However, due to the presence of existing corrosion damage, the failure rate will not immediately be reduced to zero. Mechanical damage and previously undetected corrosion related damage may still result in failure, but if effective cathodic protection is achieved, corrosion failures should cease after a period of 1 or 2 years. Accurate failure records should be kept for both protected and unprotected systems in order to determine the need for cathodic protection and the effectiveness of installed systems. A typical failure rate analysis is shown in Figure 7.

3.5 Nondestructive Testing of Facility. Periodic evaluation of the condition of the protected system can also be used to determine the adequacy of the cathodic protection system installed on the structure, or to establish the need for protection.

3.5.1 Visual Analysis. If the surface of a structure is accessible or is exposed for repairs, alterations, or specifically for the purposes of inspection, visual inspection may be used to evaluate the need for protection of the effectiveness of cathodic protection applied to the structure. Signs of corrosion such as the presence of corrosion products, pitting, cracking, reduction in physical size, or other evidence of deterioration should be noted.

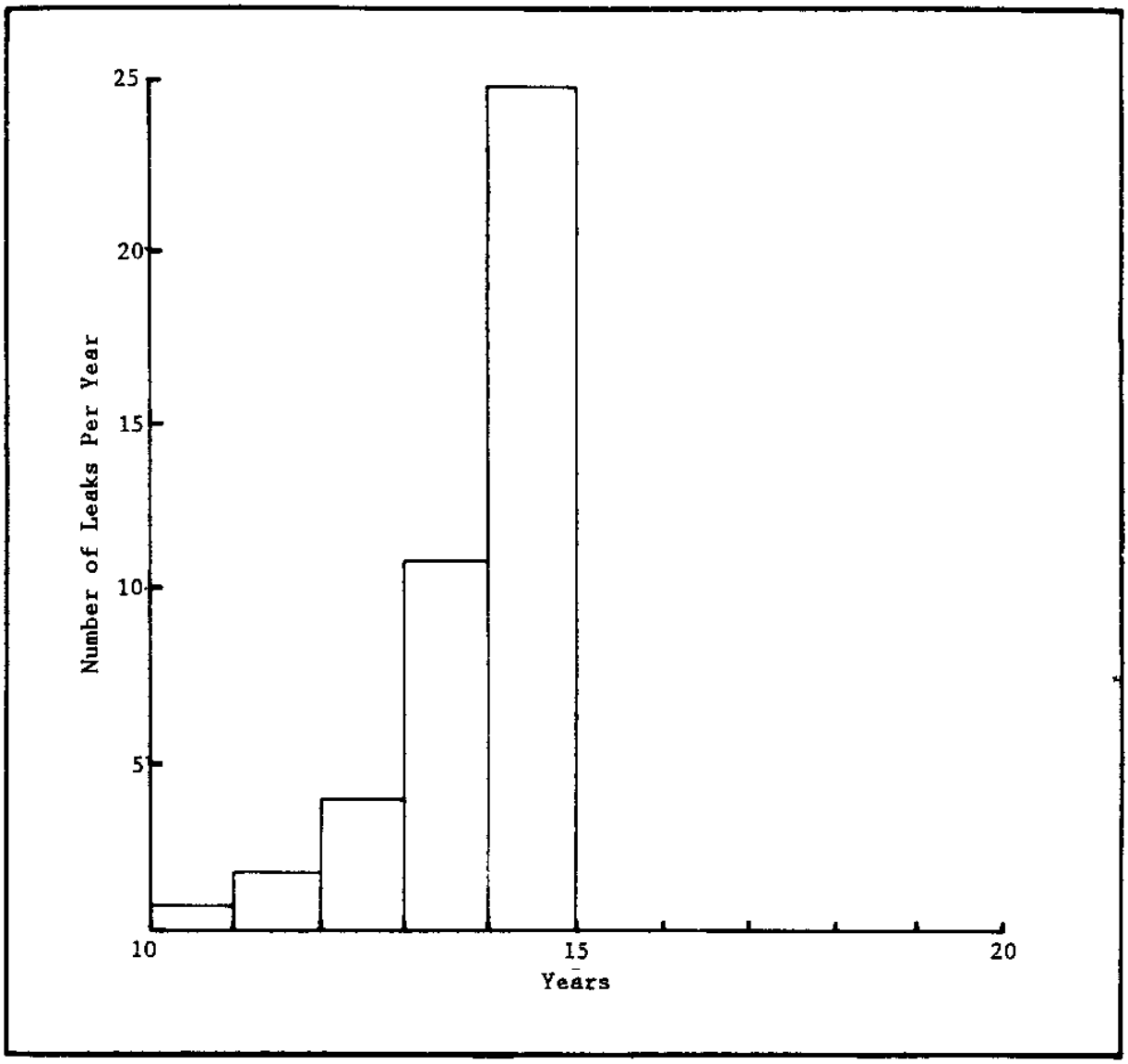

Figure 7
Failure Rate Versus Time

A variation of visual inspection is the installation of small metal samples, or coupons, electrically connected to the structure at various critical points on the structure. Periodic removal and evaluatio of these samples including visual observation and weight loss can be used infer the corrosion activity of the structure being monitored.

3.6 Consequences of Underprotection. If the measured potentials o structure are not as negative as required by one or more of the applicabl criteria for cathodic protection, some corrosion of the structure may occ However, the corrosion of the structure will be reduced in proportion to amount of current supplied. When only parts of the structure do not reac the

When protective currents are totally interrupted, corrosion will usually return to a normal rate after a short period of time.

3.7 Consequences of Overprotection. In addition to the chemical corrosion damage that can occur on aluminum and lead structures if limiting potentials are exceeded in the negative direction, excessive negative potentials can also damage other metals. In addition to being wasteful of anode material or electrical power, excess potentials can cause disbondment of protective coatings and can cause hydrogen embrittlement of certain types of steels, especially high strength steels.

3.7.1 Coating Disbondment. Excess cathodic protection potentials can result in the generation of hydrogen gas. When the cathodic protection potential reaches the polarized potential of -1.12 V (instant off), with respect to a copper/copper sulfate reference electrode, the generation of hydrogen gas will occur. When hydrogen gas is generated it is often trapped between the coating and the surface and causes blisters and disbonding of the coating.

Electrolyte can subsequently fill the gap between the coating and the metal and, as the coating is an electrical insulator, sufficient current for effective cathodic protection cannot reach the affected area and corrosion will occur. Coating disbondment is a particular problem in water tanks. In soil environments when high quality coatings are used, disbondment is seldom encountered at potentials less negative than -1.6 V (current on) or -1.12 polarized potential (instant off).

3.7.2 Hydrogen Embrittlement. The hydrogen produced when cathodic protection currents are excessive can also result in the reduction of the ductility of steel. This is particularly true for high strength steels (in excess of 130,000 pounds per square inch (psi) yield strength).

Section 4: CATHODIC PROTECTION SYSTEM DESIGN PRINCIPLES

4.1 Introduction. As cathodic protection is applied to the prevention of corrosion of a wide variety of structures in a wide variety of environments, each situation will require special consideration. There are fundamental procedures that should be followed in each case. However, the actual functioning of any cathodic protection system is dependent upon the condition of the local environment at each point on the surface of the structure to be protected, and upon the actual level of protective current supplied to each point of the structure. A predesign survey, as outlined in Appendix A, is essential for determining environmental and structural considerations for the design of any cathodic protection system. While a good approximation of the system requirements can be obtained through field surveys and a good approximation of current distribution can be made when allowances are made for differing environments and interfering structures, the installed system will, at a minimum, require initial adjustments to balance the system and periodic adjustments to maintain that balance. In some cases, particularly in the case of previously unknown interfering metallic structures in the vicinity of the structure being protected, modifications to the initially designed system may be required in order to achieve adequate protection. The design and operation of cathodic protection systems is an iterative procedure.

4.2 General Design Procedures. The general design procedure for both sacrificial anode and impressed current systems is similar. First the amount of protective current is determined, then the best means of applying the current to the structure is established. In many cases both sacrificial and impressed current systems are feasible and an initial approximate design is prepared for each type of system in order to select the most appropriate type of system for the particular application.

4.2.1 Drawings and Specifications. A review of pertinent drawings and specifications for the structure being protected and for the site should be made in order to obtain information necessary for the design of a cathodic protection system. Actual conditions ("As-Built") should be verified since structurally and operationally insignificant factors, such as contact between buried structures (shorts), can have a great effect upon the operation of a cathodic protection system.

4.2.1.1 Drawings and Specifications for the Structure to be Protected. The size, shape, material, and surface condition of the structure to be protected must be established in order to design an effective cathodic protection system. The size and shape are usually established by the appropriate drawings for the installation. The material and surface conditions, particularly the presence and quality of protective coatings, are usually established by the specifications for the installation. For a previously installed system, the condition of the protective coatings may have to be established during a field survey.

4.2.1.2 Site Drawings. A site drawing including all other metallic structures in the vicinity should also be reviewed to establish the presence and locations of other structures which may affect the operation of the system being designed.

The presence of other cathodic protection systems in the area should be particularly noted as the installation of an additional cathodic protection system can affect the operation of existing systems. The review of the site drawings should also include the location of sources of ac power for impressed current systems and possible location of anode ground beds.

4.2.2 Field Surveys. A field survey at the site is usually required in order to establish the actual environmental conditions which will be encountered. For submerged systems, all that is normally required is a water analysis, or current requirement test, and a site survey to establish the presence of interfering structures or other special circumstances. For buried systems, more extensive information is required.

4.2.2.1 Water Analysis. Samples of water should be analyzed for pH, chloride, sulfate, and resistivity at a minimum. Other factors such as hardness may be pertinent to the specific circumstance.

4.2.2.2 Soil Characteristics. For buried systems, soil characteristics must be defined in order to establish the requirements for protection. Sulfide, sulfate, chloride, pH, and other chemical constituents will affect the current requirements necessary for protection and protection criteria for some materials. Current requirements for typical environments are given in Tables 1 and 2. Protection criteria are given in para. 3.3.

Table 1
Current Requirements for Cathodic Protection of Bare Steel

ENVIRONMENT	MILLIAMPERES PER SQUARE FOOT (mA/ft^2)
Soil with resistivity <1,000 ohm-cm	6.0 - 25.0
Soil with resistivity 1,000 - 10,000 ohm-cm	3.0 - 6.0
Soil with resistivity 10,000 - 30,000 ohm-cm	2.0 - 3.0
Soil with resistivity >30,000 ohm-cm	1.0 - 2.0
Highly aggressive soil with anaerobic bacteria	15.0 - 40.0
Still fresh water	2.0 - 4.0
Moving fresh water	4.0 - 6.0
Turbulent fresh water	5.0 - 15.0
Hot fresh water	5.0 - 15.0
Still seawater	1.0 - 3.0
Moving seawater	3.0 - 25.0
Concrete	0.5 - 1.5

Table 2
Current Requirements for Cathodic Protection of Coated Steel

ENVIRONMENT	MILLIAMPERES PER SQUARE FOOT (mA/ft^2)
Pipeline, epoxy or other high performance coating	0.001 - 0.005
Pipeline, reinforced coal tar	0.005 - 0.025
Pipeline, grease coating with wrapper	0.05 - 0.150
Pipeline, asphalt mastic 1/2" thick	0.001 - 0.005
Pipeline, old asphalt, or other deteriorated coating	0.05 - 0.35
Pipeline, old paint coating	0.10 - 0.30
Tank bottoms	0.05 - 2.0
Tanks for cold potable water	0.05 - 2.0
Tanks for cold seawater	0.05 - 4.0
Turbulent cold water or hot potable water tanks	0.30 - 3.0
Steel sheet piling fresh water side	0.10 - 1.5
Steel sheet piling seawater side	0.10 - 2.0
Steel sheet piling soil side	0.05 - 1.0

a) Soil resistivity is the single most important characteristic used in the design of cathodic protection systems for buried structures. As will be shown in sections to follow, protective current requirements, sacrificial anode outputs, and impressed current anode bed resistance are all dependent upon soil resistivity. Formerly, soil corrosivity and soil resistivity were considered to be closely related with the highest corrosivity being associated with low soil resistivity. However, due to frequent exceptions to this relationship, soil resistivity alone is no longer considered to be sufficient for establishing soil corrosivity.

b) pH is a measure of the acidity or alkalinity of a water solution. Soil pH is a measurement of the pH of the water contained in the soil. pH values range from 0 to 14 with 0 to 7 being acidic, 7 being neutral, and 7 to 14 being alkaline.

c) Sulfide, sulfate, chloride, and other chemical constituents in the soil may be important in the design of a cathodic protection system. Unless experience in the area has shown otherwise, analysis for sulfate, sulfide, and chloride should be performed on soil samples from the site prior to system design.

4.2.2.3 Current Requirement Tests. Current requirements for buried structures are best determined by field tests. In these tests, a temporary cathodic protection system is installed. Measurements of the currents supplied and the structure-to-electrolyte potentials achieved are used to establish the required current to protect the structure.

4.2.2.4 Location of Other Structures in the Area. As the presence of interfering structures is very important in the design of cathodic protection systems, a site survey should be performed to locate any such structures. Buried structures such as pipelines which have risers, valves, etc., in the area can be traced using electronic tracers. The presence of buried structures in the area that do not have any surface indications are difficult to locate. This factor makes the maintenance of accurate activity records showing all buried structures and utilities extremely important.

4.2.2.5 Availability of ac Power. The availability of ac power at the site should be determined as the cost of installing new ac power lines may be an important factor in determining whether a sacrificial or impressed current system is the most practical for a specific application.

4.2.3 Current Requirements. The most desirable means of determining the amount of current required for protection of a structure is to measure the actual amount of current required to achieve protection through installation and operation of a temporary cathodic protection system as shown in Figure 8. For the design of cathodic protection systems to be installed in conjunction with the installation of a new structure the current requirements can be estimated from following Tables 1 and 2. Table 1 gives typical current requirements for uncoated steel structures. The values are for coated steel structures and include allowance for typical coating efficiencies.

The total amount of current required is determined by multiplying the required current density by the area of the structure to be protected. As can be seen by comparing Table 1 with Table 2, the currents required to protect a well coated structure can be two orders of magnitude less than the current required to protect the same structure if it is uncoated. The reduced amount of current required for the protection of well coated structures reduces the cost of protection as well as reducing other problems such as interference with other structures.

4.2.4 Choice of Sacrificial or Impressed Current System. The decision between using sacrificial anode or impressed current cathodic protection systems is based upon two major factors, feasibility and cost. Often, a cathodic protection system using both methods is designed for a given structure and the systems are directly compared in order to select the most appropriate type of system. Economic analysis to determine the least cost system should include considerations of mission life, operating costs, maintenance costs, and cathodic protection system replacement costs as appropriate. In general, systems with small stable current requirements (0.5 A or less per 100 lineal feet of structure) are more likely to be protected using sacrificial anode type systems. Those structures with larger current requirements (1 A or more per 100 lineal feet of structure), or where the current requirements vary considerably with time, are more likely to be protected using impressed current systems. Other advantages of sacrificial anode systems are the lesser amount of required maintenance and reduced levels of interference associated with the low currents and small anode-to-structure distances. Impressed current systems are generally used where amounts of current larger than can be supplied by a sacrificial anode system are required. This may be due to high electrolyte resistivity which limits sacrificial anode output, or to high current requirements associated with protection of large or poorly coated structures.

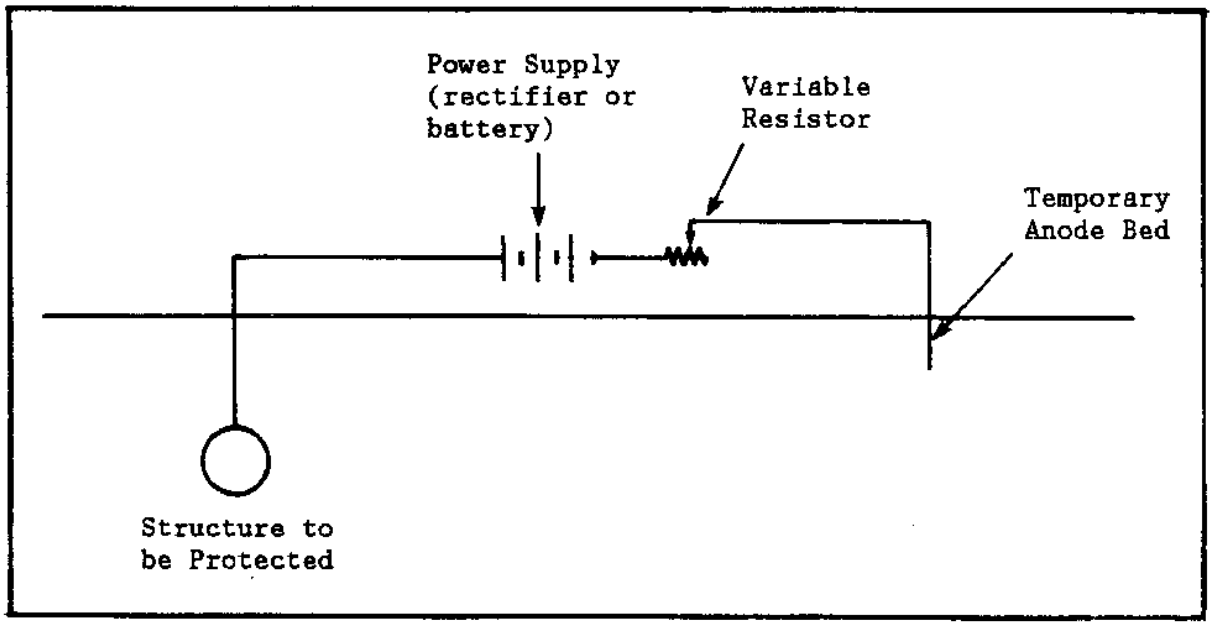

Figure 8
Temporary Cathodic Protection System for Determining Current Requirements

Current Requirements]

4.2.5 Basic Design Procedure for Sacrificial Anode Systems. For sacrificial anode systems, the first step is the determination of the tot current required either from actual current requirement measurements or b multiplying a typical current requirement by the surface area of the structure to be protected. Then the output of the sacrificial anodes to used is determined. This is usually calculated based upon soil resistivi Thus, soil resistivity is an important factor in the design of a cathodic protection system. A simplified expression that can be used to estimate output of sacrificial anodes is given below. This equation assumes that structure to be protected is in electrolyte resistivity above 500 ohms-centimeters (ohms-cm) and that the anode-to-structure distance is 10 feet. A more accurate determination of sacrificial anode output or the output of multiple anodes can be determined using the methods outlined in Section 7.

EQUATION:

$$i = \frac{C\ f\ y}{p}$$

where

i = anode current output (mA) of a single anode

C = a constant equal to the following:

	Zinc	Standard Magnesium Alloy	High Potential Magnesium Alloy	High Purity Zinc
For protection of well coated structures	40,000	96,000	120,000	40,000
For protection of poorly coated or bare structures	50,000	120,000	190,000	50,000

f = anode size factor from Table 3

y = structure potential factor from Table 4

p = electrolyte resistivity in ohms-cm

The number of anodes is then determined by dividing the total current required by the output per anode. The expected anode life is estimated based upon the practical deterioration rate for the selected anode material. Magnesium is consumed at a typical rate of 17 pounds per ampere year (lbs/A yr), zinc at 26 lbs/A yr, and typical aluminum alloy anodes at 11 lbs/A yr. As the actual design is an iterative process, such factors as anode size or material may be adjusted in order to optimize the system being designed.

More precise calculations for the design of sacrificial anode cathodic protection systems are given in Section 7. Examples of typical designs using both sacrificial anode and impressed current systems are given in Section 8.

4.2.6 Basic Design Procedure for Impressed Current Systems. For the design of impressed current systems three steps are taken.

4.2.6.1 Total Current Determination. The first step is the same as for sacrificial anode systems, namely the determination of the total current required either from actual current requirement measurements or by multiplying a typical current requirement (from Tables 1 or 2) by the surface area of the structure to be protected.

Table 3
Galvanic Anode Size Factors

ANODE WEIGHT (lb)	ANODES	SIZE FACTOR (f)
	STANDARD ANODES	
3	Packaged	0.53
5	Packaged	0.60
9	Packaged	0.71
17	Packaged	1.00
32	Packaged	1.06
50	Packaged - anode 8" diam x 16" long	1.09
50	Packaged - anode 5" x 5" x 31" long	1.29
	LONG ANODES	
9	Packaged - anode 2.75" x 2.75" x 26"	1.01
10	Packaged - anode 1.5" x 1.5" x 72"	1.71
18	Packaged - anode 2" x 2" x 72"	1.81
20	Packaged - anode 2.5" x 2.5" x 60"	1.60
40	Packaged - anode 3.75" x 3.75" x 60"	1.72
42	Packaged - anode 3" x 3" x 78"	1.90
	EXTRA LONG ANODES	
15	Packaged - anode 1.6" diam x 120"	2.61
20	Packaged - anode 1.3" diam x 240"	4.28
25	Packaged - anode 2" diam x 120"	2.81

Table 4
Structure Potential Factor

STRUCTURE-TO-ELECTROLYTE POTENTIAL (VERSUS COPPER/ COPPER SULFATE)	STRUCTURE FACTOR (Y) FOR MAGNESIUM	STRUCTURE FACTOR (Y) FOR ZINC
-0.70	1.14	1.60
-0.80	1.07	1.20
-0.85	1.00	1.00
-0.90	0.93	0.80
-1.00	0.79	0.40
-1.10	0.64	0.00
-1.20	0.50	0.00

4.2.6.2 Total Resistance Determination. The next step in the design of impressed current systems is the determination of the total circuit resistance. This value is dependent on many factors as are described in Section 6. In the majority of systems, the resistance of the anode or group of anodes (anode bed) is the controlling factor in the total circuit resistance and is the factor most easily controlled by increasing the number of anodes used. This is primarily a function of soil resistivity. The cost of the number of anodes to be used is balanced against the cost of power required and the cost of the rectifier which is determined by the current and voltage requirements of the system. An anode bed resistance less than 2 ohms is highly desirable. Also, high voltages can result in premature failure of system components such as anode lead wires and should be avoided where possible.

A simplified expression for estimating the resistance of standard 60-inch-long graphite anodes installed either vertically in 8- to 10-inch diameter, 10-foot-deep backfilled holes or horizontally in 1-foot cross section, backfilled with coke breeze, 10-foot-long trenches, 6 feet deep is given below. When more than one anode is used in parallel to reduce circuit resistance, the adjusting factor must be used to determine the total anode bed resistance:

EQUATION: $$R_V = \frac{P\ F}{537} \quad \text{or} \quad R_H = \frac{P\ F}{483} \qquad (4)$$

where

R_V = resistance of the vertical anode or bed

R_H = resistance of the horizontal anode or bed

P = electrolyte resistivity in ohms-cm

F = adjusting factor for multiple anodes (F = 1.0 for a single anode and for multiple anodes refer to Table 5).

Table 5
Adjusting Factor for Multiple Anodes (F)

	ANODE SPACING				
NO. OF ANODES IN PARALLEL	5 Feet	10 Feet	15 Feet	20 Feet	25 Feet
2	0.652	0.576	0.551	0.538	0.530
3	0.586	0.460	0.418	0.397	0.384
4	0.520	0.385	0.340	0.318	0.304
5	0.466	0.333	0.289	0.267	0.253
6	0.423	0.295	0.252	0.231	0.218
7	0.387	0.265	0.224	0.204	0.192
8	0.361	0.243	0.204	0.184	0.172
9	0.332	0.222	0.185	0.166	0.155
10	0.311	0.205	0.170	0.153	0.142
11	0.292	0.192	0.158	0.141	0.131
12	0.276	0.180	0.143	0.132	0.122
13	0.262	0.169	0.139	0.123	0.114
14	0.249	0.160	0.131	0.116	0.107
15	0.238	0.152	0.124	0.109	0.101
16	0.226	0.144	0.117	0.103	0.095
17	0.218	0.138	0.112	0.099	0.091
18	0.209	0.132	0.107	0.094	0.086
19	0.202	0.127	0.102	0.090	0.082
20	0.194	0.122	0.098	0.086	0.079
22	0.182	0.114	0.091	0.079	0.073
24	0.171	0.106	0.085	0.074	0.067
26	0.161	0.100	0.079	0.069	0.063
28	0.152	0.094	0.075	0.065	0.059
30	0.145	0.089	0.070	0.061	0.056

More precise methods for the calculation of anode resistance and other components in the total circuit resistance are given in Section 6.

4.2.6.3 Voltage and Rectifier Determination. Using the total circuit resistance and the current required, the appropriate voltage for the rectifier is then calculated using Ohm's law:

EQUATION: $$V = I R \tag{5}$$

where

V = required voltage
I = required current
R = total circuit resistance

In practice, a rectifier or other power supply is normally selected with a capacity in excess of the required voltage and current in order to allow for deterioration of coatings on the system, additions to the system, aging of the power supply, and inaccuracies in the system design.

More precise calculations for the design of impressed current cathodic protection systems are given in Section 6. Examples of typical designs using both sacrificial anode and impressed current systems are given in Section 8.

4.2.7 Analysis of Design Factors. The following factors should always be analyzed when designing either type of cathodic protection system:

a) Anode-to-electrolyte resistance (sacrificial anode output). This includes a determination of electrolyte resistivity, resistance (output) of a single anode, the effects of anode configuration and spacing, the effects of anode orientation, and the location of the anodes with respect to both the structure being protected and other metallic structures in the area.

b) Weight of anode to give the required anode life. This is most important for both types of systems. One lb/A yr for high silicon cast iron anodes and 2.5 lbs/A yr for graphite are typical consumption rates for impressed current anodes.

c) The use of special backfill surrounding the anodes. This is usually justified by increased anode efficiency and should be used unless it is shown to not be economically justified. Backfill is not required when anodes are hung in water or installed at the bottom of bodies of water.

d) Effect of seasonal variations in electrolyte resistivity from variations in soil conductivity due to moisture or in seawater due to runoff.

e) Cable resistance. In impressed current systems, the size of cable used should be determined based upon the economic analysis of cable size given in Section 6.

f) Vulnerability to physical damage.

g) Location of structure to structure bonds and insulating joints.

h) Number, type, and location of test stations for initial adjustment and periodic inspections for maintenance.

i) Availability and cost of maintenance.

4.3 Determination of Field Data. Data required for the design of cathodic protection systems is normally obtained through a field survey. In addition to field measurements, historical data such as soil resistivity measurements, as well as plans, drawings, etc., concerning the site and other structures located at or near the site of the system to be designed should be reviewed. In general, however, specific field determinations of several parameters will need to be determined in order to design an effective cathodic protection system.

4.3.1 Determination of Electrolyte Resistivity

4.3.1.1 In Soils. Soil resistivity is best determined in situ using the Wenner 4-pin method as shown in Figure 9. In this method, a current is passed through two electrodes and a drop in potential through the soil due to the passage of the current is measured with a second pair of electrodes. The electrodes should be in a straight line. A specialized instrument is used to supply the current and measure the potential drop. In order to reduce the influence of any stray currents in the area and polarization at the electrodes, alternating current is used in the instrument. The soil resistivity is calculated from the indicated reading by using the following formula:

a) Resistivity (ohms-cm) = 191.5 x pin spacing (feet) x meter reading. Resistivity is measured either in ohms-cm or in ohms per cubic centimeter (ohms/cm^3), which are equivalent.

b) In the Wenner 4-pin method, the average resistivity of the soil between the two center electrodes to a depth equal to the pin spacing is measured. If the pin spacing is increased then the average soil resistivity to a greater depth is measured. If the average resistivity increases as the pin spacing increases, there is a region of higher soil resistivity at depth. If the average soil resistivity decreases with depth, there is a region of lower soil resistivity at depth. Other instruments using the 2-pin method of soil resistivity measurement give less accurate results than the Wenner 4-pin method in many circumstances and are limited to measurement of resistivity only in the direct vicinity of the soil probe. Use of these instruments is primarily limited to preliminary surveys.

c) When it is impractical to make field measurements of soil resistivity, soil samples can be taken from an appropriate depth and the resistivity of the sample can be determined by the use of a soil box. As shown in Figure 10, the measurement made on the soil sample is essentially the 4-pin method. Metal contacts in each end of the box are used to pass current through the sample. Potential drop is measured across probes inserted into the soil. The resistivity is calculated using constants furnished with the particular size of soil box being used. Due to the disturbance of the soil during sampling and possible drying out of the soil during shipment, this method of soil resistivity measurement is less accurate than actual field tests by the preferred Wenner 4-pin method. To minimize drying out of samples they should be placed in plastic bags and sealed prior to shipment. Soil resistivities contained in routine geological surveys are normally taken at shallow depths and should not be used as a basis for cathodic protection system designs.

4.3.1.2 Liquids. The resistivity of liquids can be measured using the Wenner 4-pin method using a soil box or by using a conductivity meter which is specifically designed for the measurement of the conductivity of solutions. Conductivity is the inverse of resistivity.

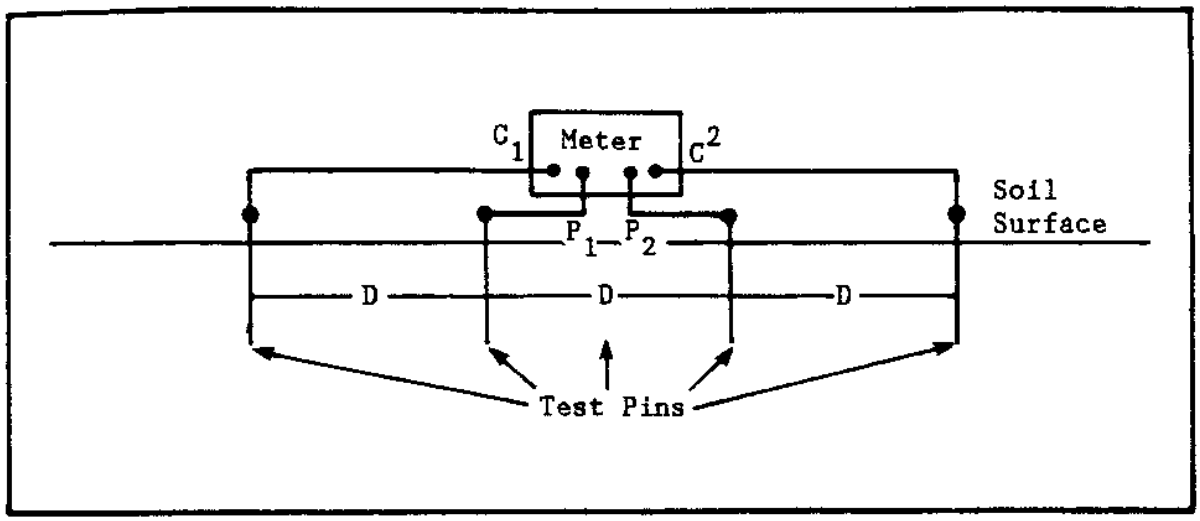

Figure 9
4-Pin Soil Resistivity Measurement

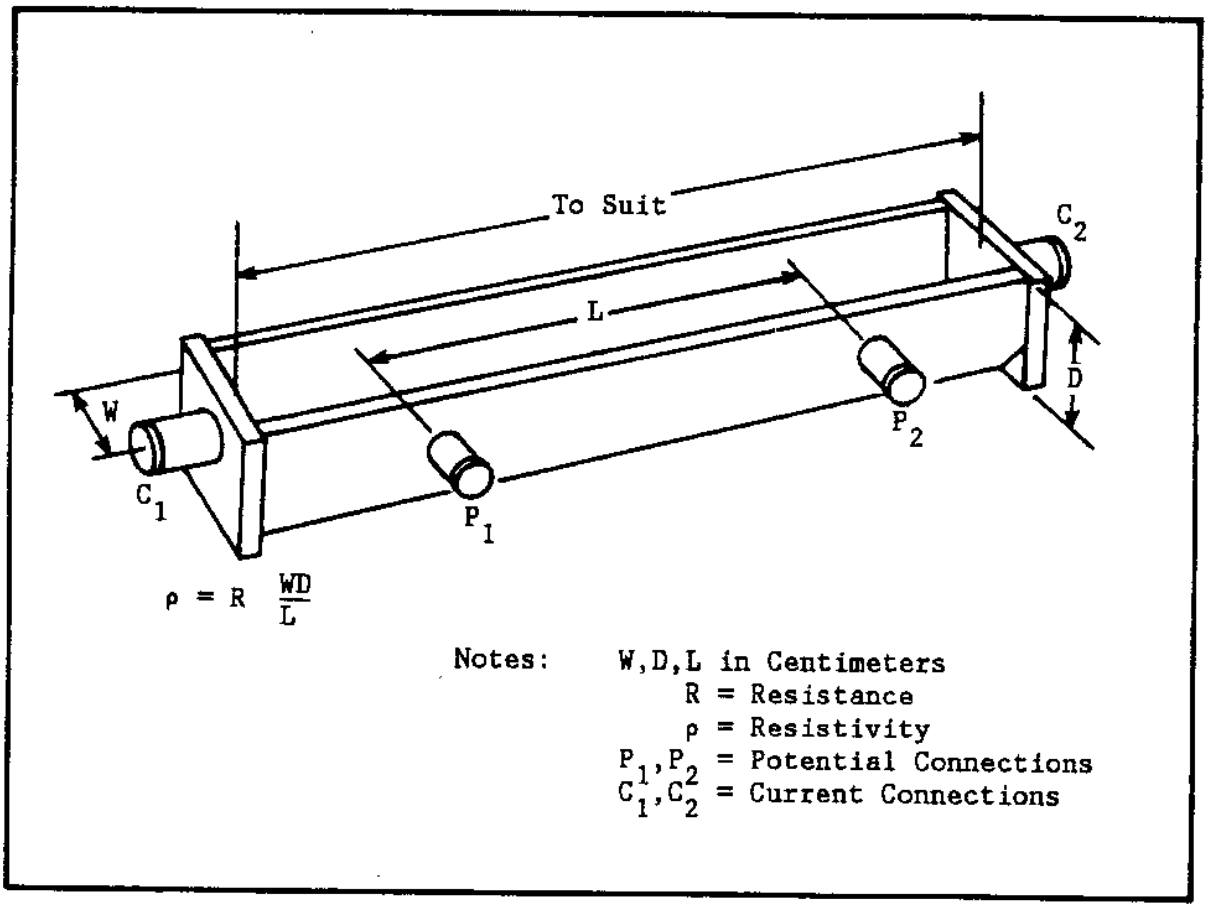

Figure 10
Soil Box for Determination of Resistivity

4.3.2 Chemical Analysis of the Environment

4.3.2.1 pH. pH of either soil or water can affect the corrosivity of the environment and the current required for cathodic protection. pH can be measured using several methods. Chemical methods of measuring pH involve either the use of pH measuring electrodes or indicators whose colors are dependent on pH. A pH meter measures the difference in potential between a pH insensitive reference electrode and an electrode whose potential is sensitive to pH. Figure 11 shows a typical pH meter suitable for field use. Colored indicators are normally used in the form of pH papers. The paper is wetted with the solution being measured and the resulting color is compared with color standards to determine the pH.

Soil pH can also be measured using the antimony electrode method. The potential of the metal antimony is sensitive to pH. The potential difference between a pH insensitive electrode and a pH sensitive antimony electrode can be used to measure pH. This method is particularly applicable to the measurement of the pH of soils since it can be performed directly on the surface of the soil. To measure the pH of a soil using an antimony electrode, the antimony electrode and a copper/copper sulfate electrode are placed on the surface of the soil and the potential difference between the two electrodes is measured using an electronic voltmeter. In order to eliminate the possible effects of stray soil currents, the position of the electrodes is reversed and the potential is again measured. There should be little or no difference in the readings if there are no stray currents in the area. If the readings differ by more than 10 mV the two readings should be averaged to cancel the effect of the stray currents. The potential readings are converted to pH values using the graph in Figure 12.

Usually, pH at the surface of the ground is vastly different than the pH at pipeline depth. Therefore, pH taken at the surface of the ground has no value in determining the conditions at pipeline depth. All pH measurements should be taken in the ditch at pipeline or tank depth, or soil from borings at proposed pipe or tank depth could be analyzed for pH.

4.3.3 Coating Conductance. Coatings can both reduce corrosion of structures and reduce cathodic protection current requirements. In the design of cathodic protection systems, the condition of protective coatings is an important factor. For buried structures the condition of the coating can be determined by electrical testing. The effective electrical resistance of the coating is determined by these tests. Instead of reporting the measurements as coating resistance they are converted to conductivity per unit area, or conductance. Coating conductance is measured by two methods: the short line method, and the long line method.

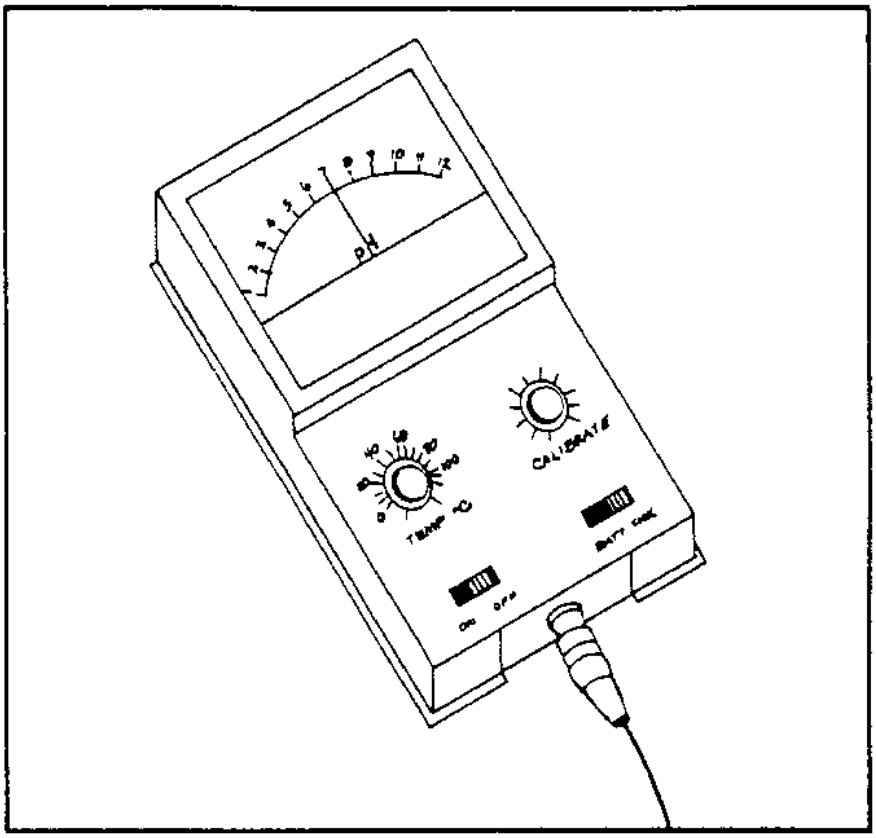

Figure 11
pH Meter

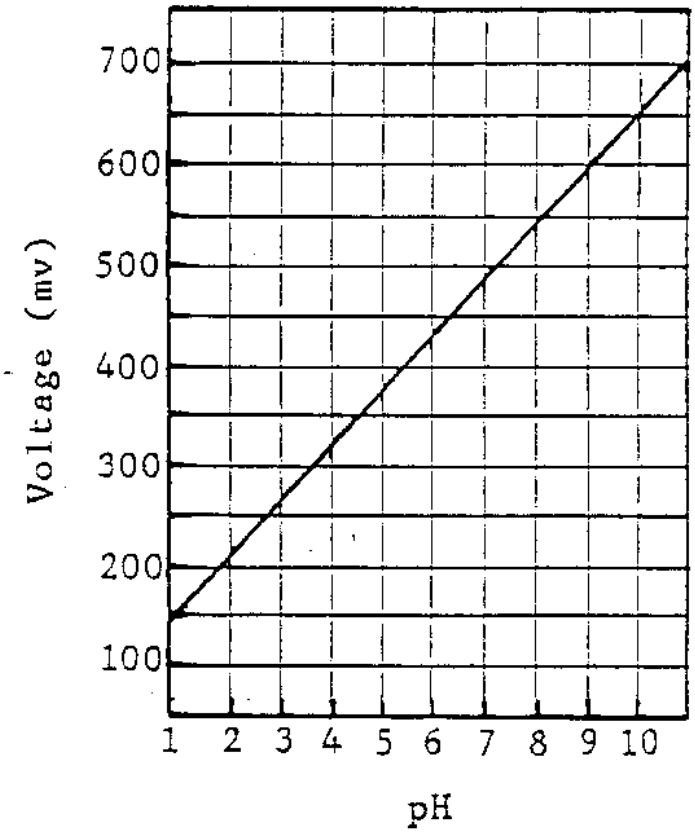

Figure 12
Antimony Electrode Potential Versus pH

4.3.3.1 Short Line Method. The short line method is used when an isolated section of pipeline is available for testing. The test setup is shown in Figure 13. In the short line method, the test current is applied then interrupted. The difference between the applied and interrupted current is ▴I. The change in structure-to-electrolyte potentials at the two test points (▴E1 and ▴E2), which occur when the current is interrupted, are measured. If the ratio between ▴E1 and ▴E2 is greater than 1.6, a correction factor from Table 6 is applied by multiplying ▴E2 by the correction factor. Coating conductance (μmhos/ft) is then calculated using the following formula:

EQUATION: $\blacktriangle I \times 10^6/[(\blacktriangle E1 + \blacktriangle E2/2)/2]$ length (ft) (6)

where

▴E1 = pipe-to-electrolyte potential with current off
▴E2 = pipe-to-electrolyte potential with current on

Table 6
Corrections Factors - Short Line Coating Conductance

VOLTAGE CHANGE - ▴E1/▴E2)

RATIO	FACTOR
1.6	0.919
1.7	0.908
1.8	0.896
1.9	0.886
2.0	0.876
2.1	0.868
2.2	0.860
2.3	0.851
2.4	0.843
2.5	0.835
2.6	0.829
2.7	0.821
2.8	0.841
2.9	0.809
3.0	0.802

4.3.3.2 Long Line Method. The long line method is used when a section of structure cannot be effectively isolated or when the ▴E1/▴E2 ratio in the short line method exceeds 3.0. The test setup for the long line method is shown in Figure 14.

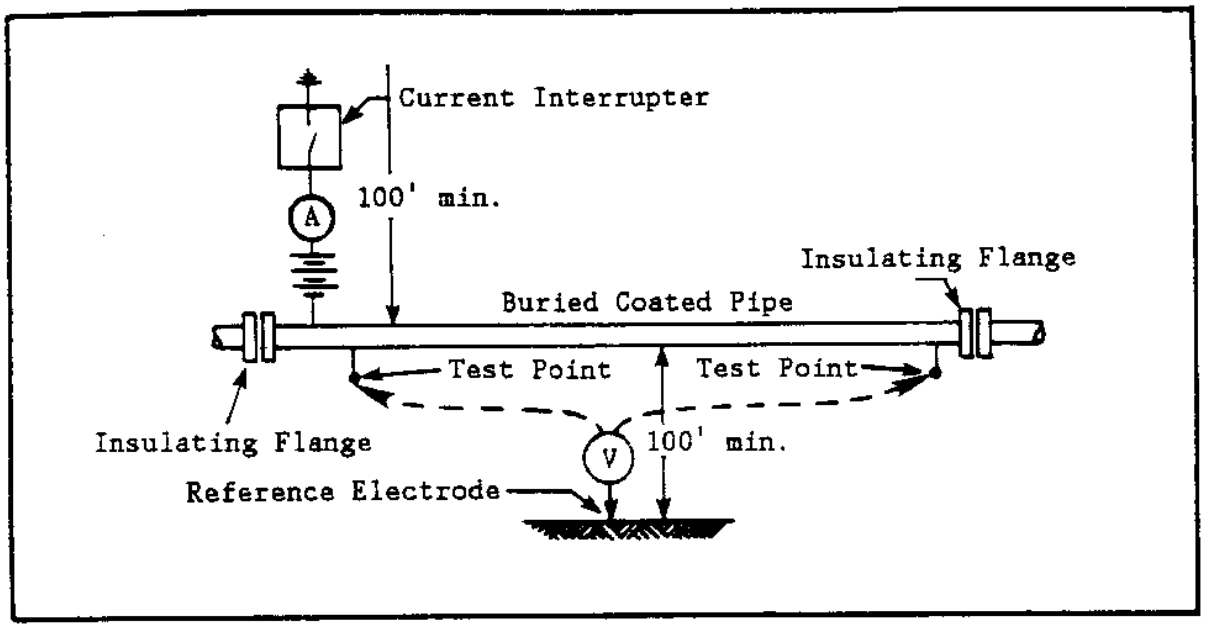

Figure 13
Coating Conductance - Short Line Method

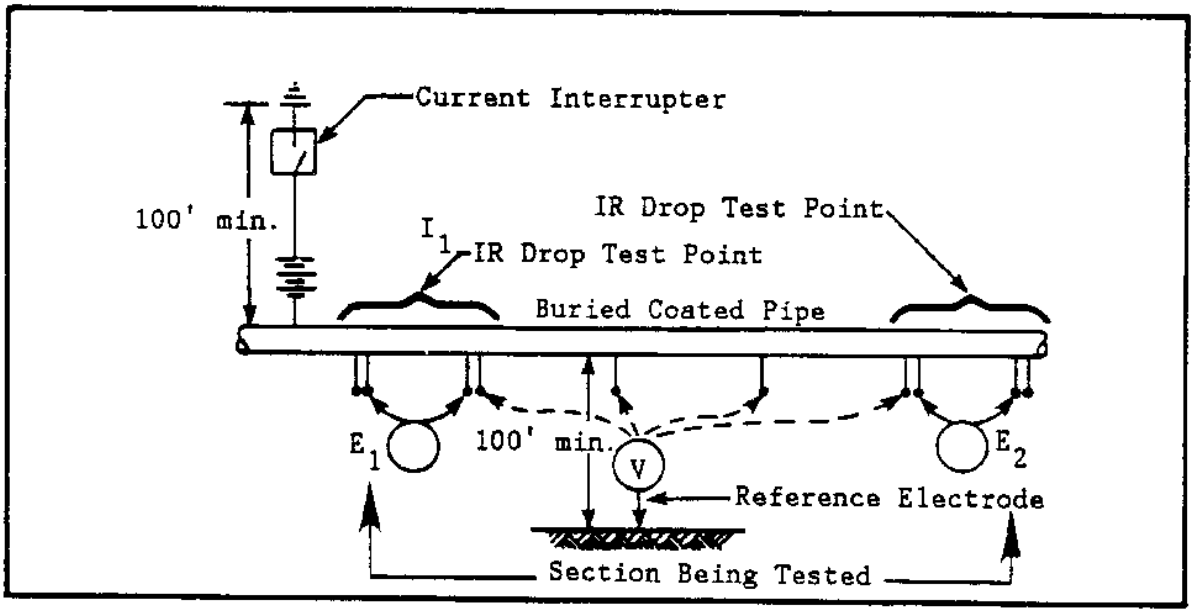

Figure 14
Coating Conductance - Long Line Method

In the long line method the test current is applied and the current flowing through the pipe is determined at the two IR drop test points. The structure-to-electrolyte potential at the two test points is measured with the current on. The test current is interrupted and the change in current at the two IR drop test points ($\Delta I1$ and $\Delta I2$) as well as the change in potential at the two potential test points ($\Delta E1$ and $\Delta E2$) are measured. As in the short line method, if $\Delta E1/\Delta E2$ is greater than 1.6, $\Delta E2$ should be multiplied by the correction factor found in Table 6. If the ratio is greater than 3, the test section should be shortened. The coating conductance (μ/ft) is then calculated using the following formula:

EQUATION: $[(\Delta I1 - \Delta I2) \times 10^6]/(\Delta E_{avg} \times \text{length (ft)}$ (7)

4.3.4 Continuity Testing. For existing structures, the continuity of the structure must be evaluated in order to design an effective cathodic protection system for the structure. If the structure is not continuous then either continuity must be achieved by the installation of continuity bonds or the structure must be protected using independent cathodic protection systems for each electrically isolated section of the structure. Continuity may be evaluated using several methods.

4.3.4.1 Method 1. The simplest method used to locate insulating or high resistance joints is by making structure-to-electrolyte potential measurements over the protected structure. As shown in Figure 15, all potential measurements past the insulating joint are actually average potentials of a larger and larger section of the pipe section to which the meter is connected. This method is subject to the influence of other structures in the area and variations in environment along the structure and often is inconclusive.

4.3.4.2 Method 2. A more reliable method of continuity testing is illustrated in Figure 16. In this method a current is applied to the structure and the potential drop along the structure is measured. As shown in Figure 17, high resistance joints are easily located using this method.

4.3.4.3 Method 3. A third method of continuity testing involves the use of an audio frequency pipe locator. At a high resistance or open circuit joint the pipe locator signals vary as shown in Figure 17 if a low frequency (audio frequency) is used.

4.3.5 Insulation Testing. Insulating joints are occasionally used to isolate sections of structures so that the protection of each section can be handled separately.

4.3.5.1 Buried Structures. For buried structures direct measurement of the insulation resistance of a joint is difficult to determine because the conductivity of the soil effectively bypasses the joint. Buried insulating flanges should always be equipped with test stations for testing of the joint. Connections for testing insulating joints are shown in Figure 18.

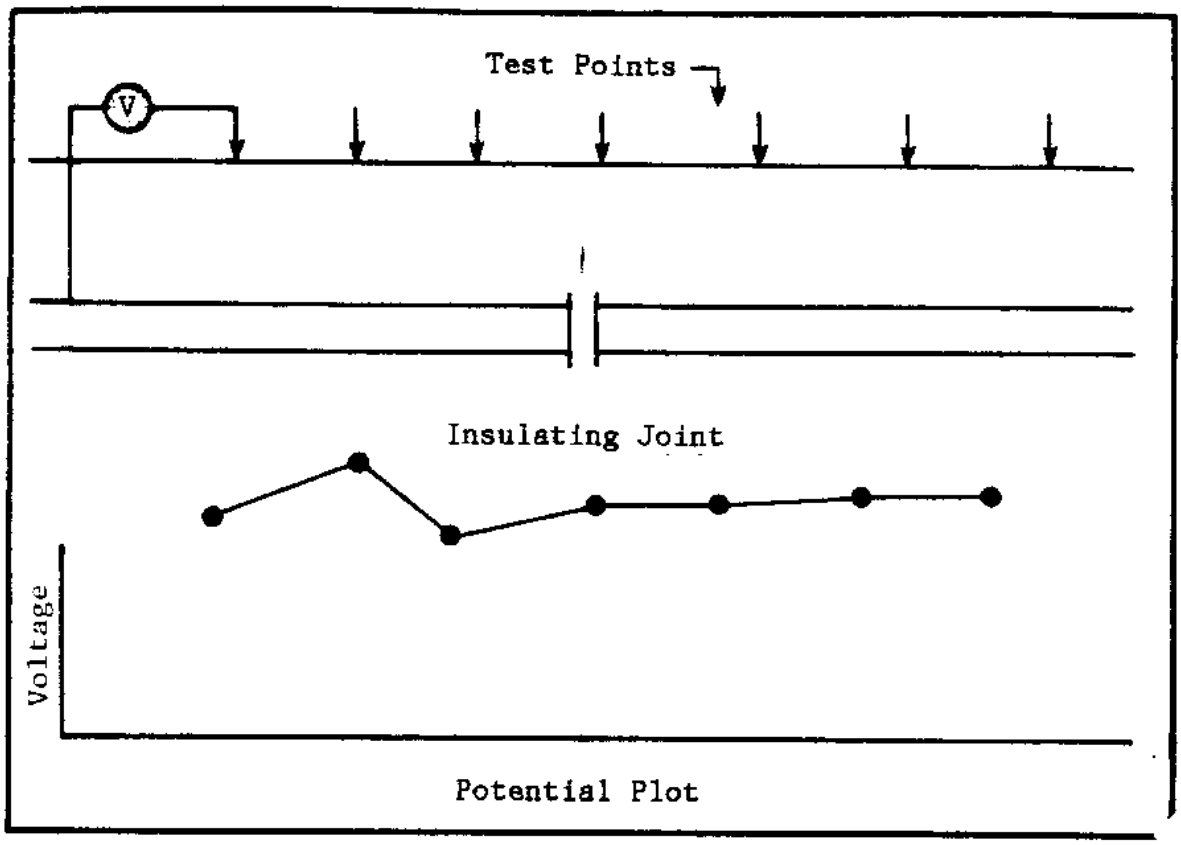

Figure 15
Continuity Testing - Potential Method

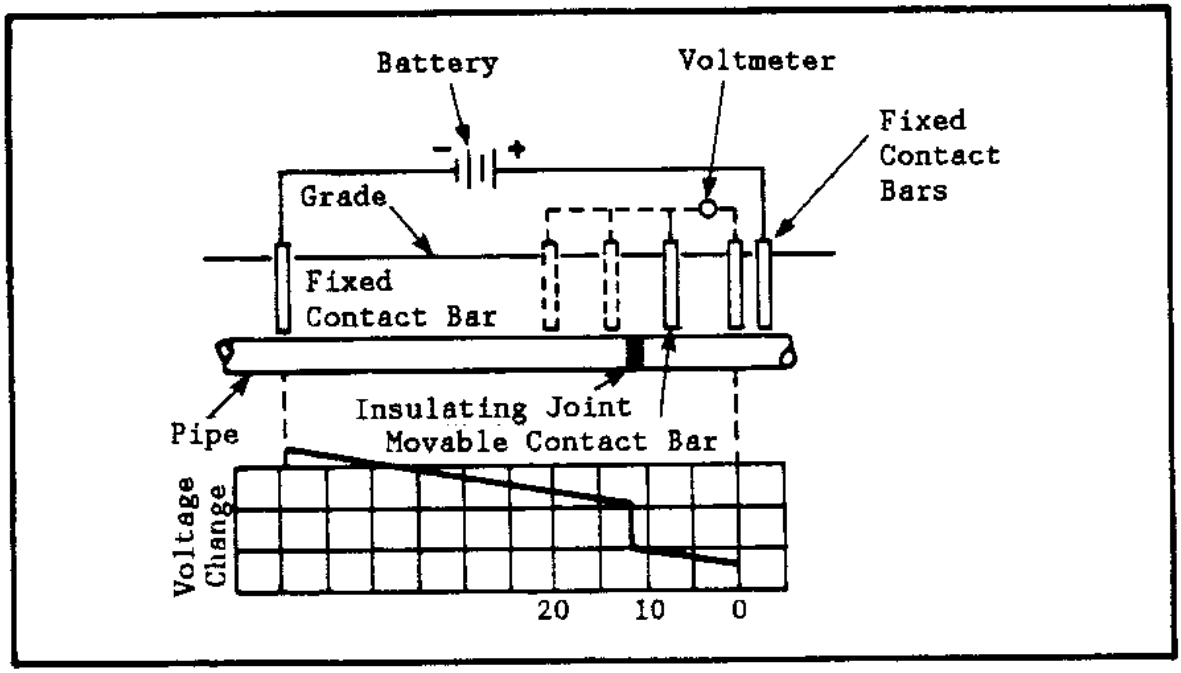

Figure 16
Continuity Testing - Potential Drop Method

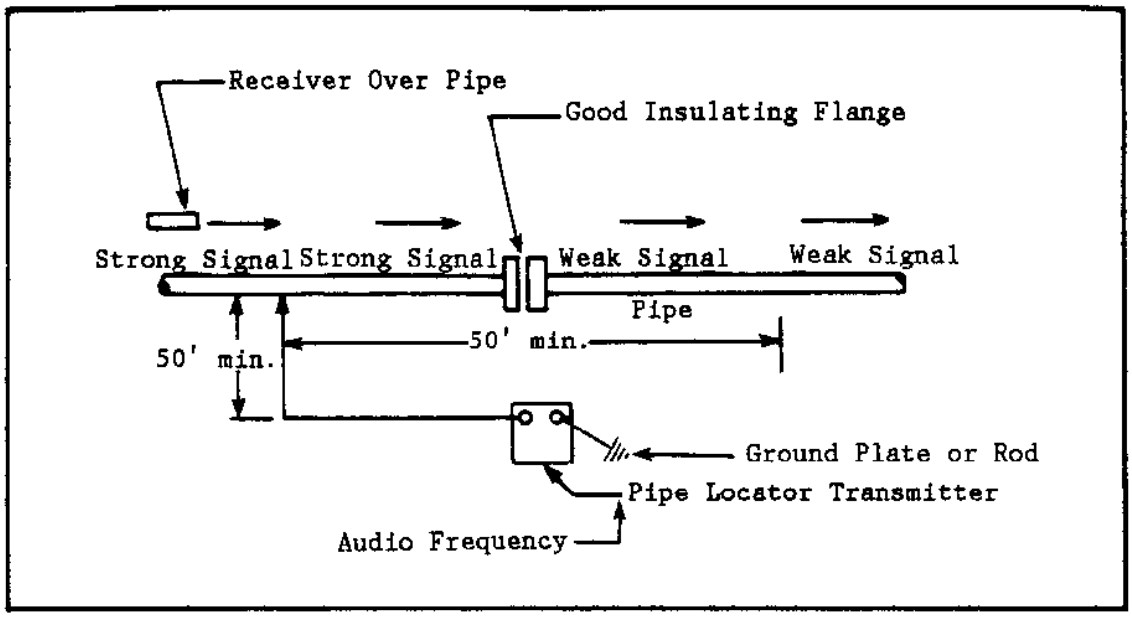

Figure 17
Continuity Testing - Pipe Locator Method

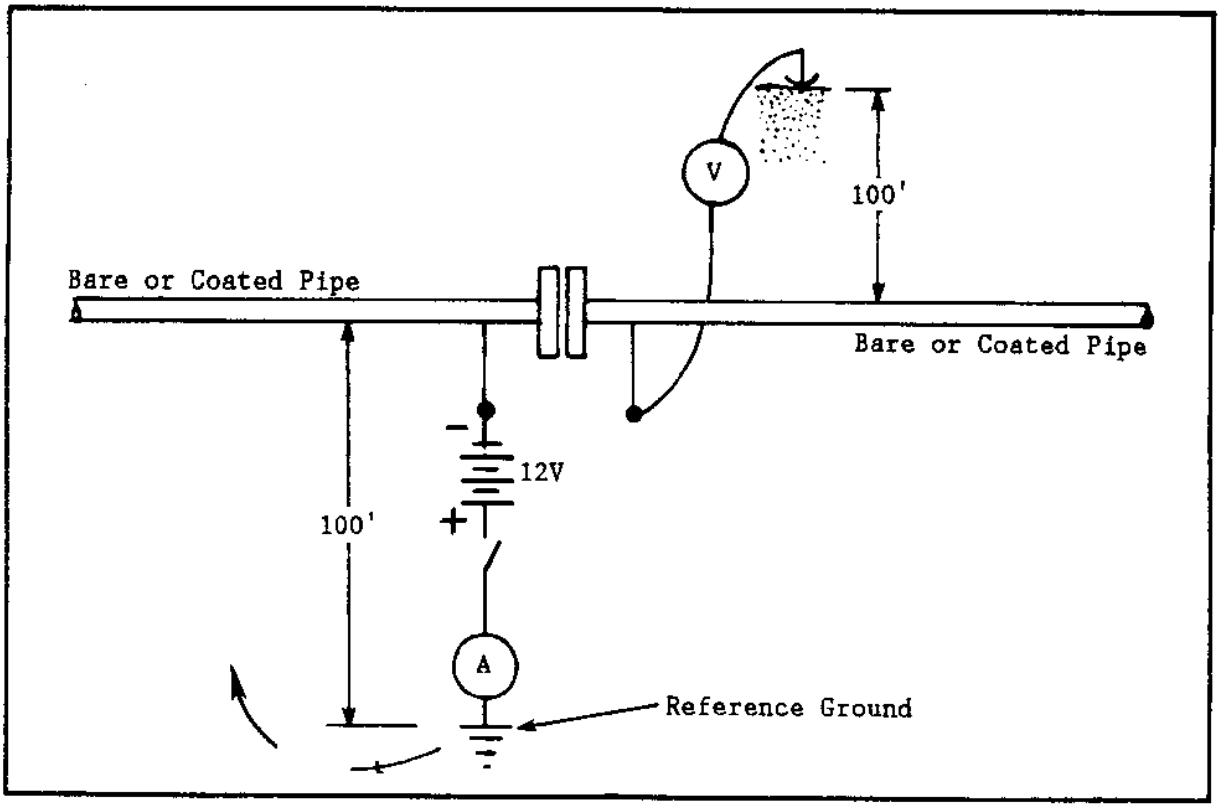

Figure 18
Insulation Testing - Two-Wire Test Station

At the two-wire test station a test current of several A is applied. If the measured potential on the supposedly isolated section does not change, or if it changes to a more positive value when the test current is applied, the insulation is effective. Special instruments have also been specifically designed to perform the test of insulation at two-wire test stations. As previously shown, an audio frequency pipe locator can also be used to inspect buried insulating connections. A special test instrument is also commercially available for underground insulator testing.

4.3.5.2 Aboveground Structures. For aboveground insulating fittings more direct methods can be used to test the effectiveness of the insulation. If there is an appreciable potential difference (over 100 mV) between the isolated sections, the insulation is effective. A flange insulation tester (instrument) that uses high frequency skin effect current is preferred if available.

As for buried insulating joints, special instruments have also been developed for more precise measurement of aboveground insulating joints.

4.4 Corrosion Survey Checklist. In order to plan and design a cathodic protection system for either an existing structure or for a structure to be constructed, the checklists in Appendix A should be reviewed to identify the need to determine information pertinent to the design.

Section 5: PRECAUTIONS FOR CATHODIC PROTECTION SYSTEM DESIGN

5.1 Introduction. Cathodic protection systems depend upon the application of electrical currents to counterbalance the natural tendency of metals to revert to their low energy combined states. In addition to the hazards involved with the operation of any electrical device, cathodic protection systems may, through the flow of current in undesirable paths, accelerate the corrosion of other structures in the vicinity of the structure being protected. Potentials exceeding those given in para. 3.2 can result in system damage. Potentials less than those required for complete protection usually result in some protection on most areas of the structure and do not result in attack at rates greater than for completely unprotected structures of similar materials and conditions.

5.2 Excessive Currents and Voltages. Flow of current in undesirable paths is proportional to the total amount of current flowing in the cathodic protection system, all other factors being equal. Thus, protection of well coated structures that require small amounts of current for protection will cause fewer problems than protection of poorly coated or bare structures that require substantially more current. Assuming that damaging potential levels such as those resulting in coating damage or hydrogen embrittlement are not reached, excessive currents will not cause deterioration of the structure being protected but can cause severe localized attack of adjacent structures.

5.2.1 Interference. The flow of current in undesirable paths resulting in accelerated attack of adjacent structures is called "interference." The adjacent structures are commonly called "foreign" structures. In Figures 19 and 20, the mechanisms of two typical situations resulting in interference are illustrated.

In Figure 19, the undesired current flows through two buried pipelines in the vicinity of the protected system. Corrosion is accelerated at locations where positive ions are forced to enter the environment from the metal surfaces. Although corrosion is not usually accelerated on the protected structure, cathodic interference can disturb the desired current distribution on the structure being protected and can reduce the amount of protection being received in some areas to a level below that required for complete protection. Corrosion occurs where the current leaves the structure and enters the electrolyte. In some models of electricity, the flow of positive ions in the electrolyte is used to establish the flow of imaginary positive charges in the metallic path used to describe conventional "current flow." However, conventional current flow is widely used in the cathodic protection industry and the flow of ions (positive) through the electrolyte should be described for each situation in order to avoid confusion. This description of electron and ion flow will be used throughout to explain what is actually happening.

In Figure 20, the potential gradient surrounding an impressed current anode results in an electron flow along a foreign structure. This flow is described as positive ion (conventional) current flow from the anode, through the electrolyte, to the pipe (cathode) and continuing on along the pipe (imaginary) to the point of discharge (anode area) where accelerated corrosion occurs.

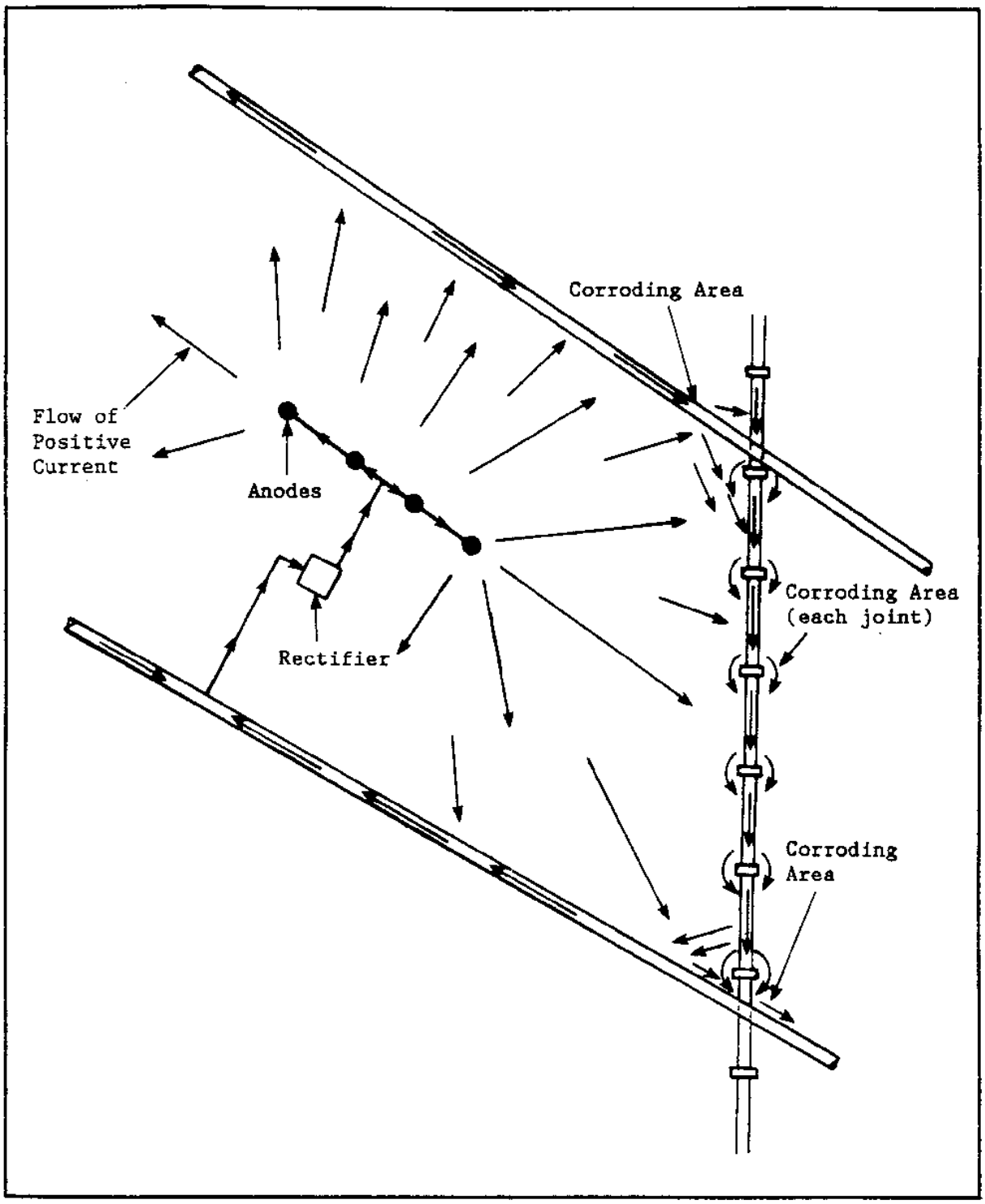

Figure 19
Interference from Impressed Current
Cathodic Protection System

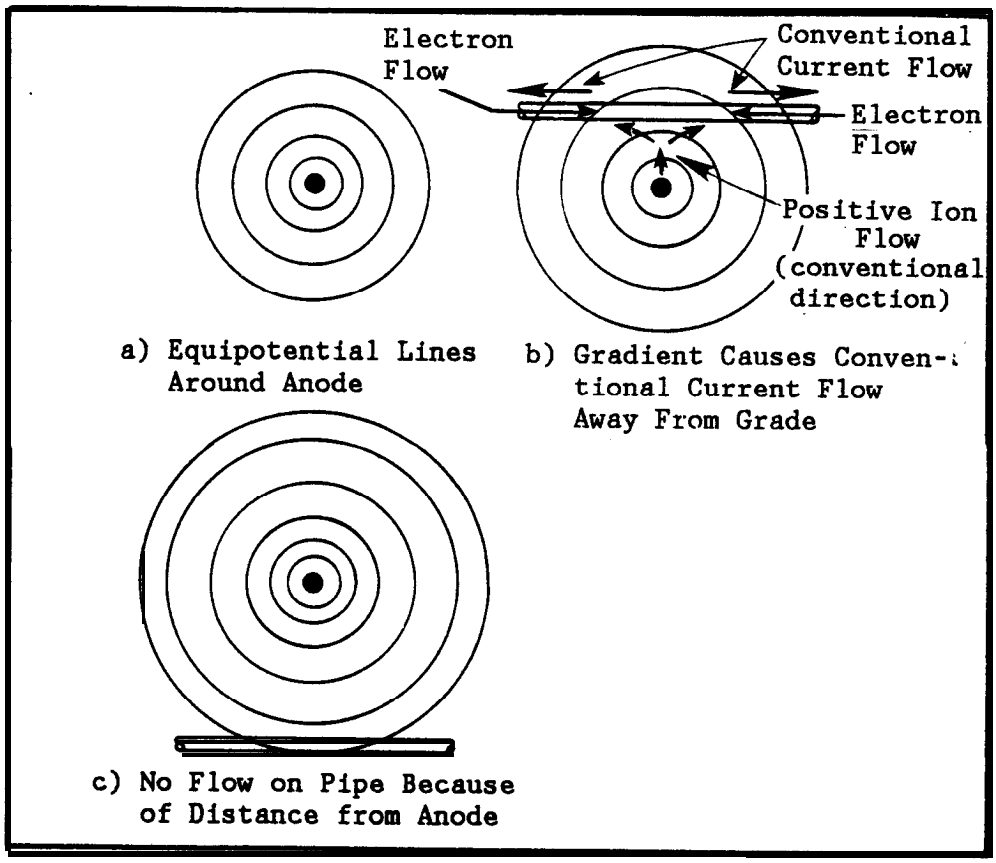

Figure 20
Interference Due to Potential Gradients

5.2.1.1 Detecting Interference. Cathodic protection interference problems are most commonly detected through the measurement of structure-to-electrolyte potentials and by the measurement of current flowing along a structure by measuring the potential (IR) drop caused by the flow of the current through the resistance of the structure.

Interference is most commonly detected during the measurement of structure-to-electrolyte potential measurements. Figure 21 shows a typical situation where interference is occurring and shows locations where structure-to-electrolyte potentials have been measured. Table 7 shows the potential measurements, which are also plotted in Figure 22. As can be seen in Figure 23, the location of the foreign structure can be easily determined by its influence on the protected structure. Likewise, the measurements taken on the foreign structure clearly show the areas where the ions are picked up and discharged.

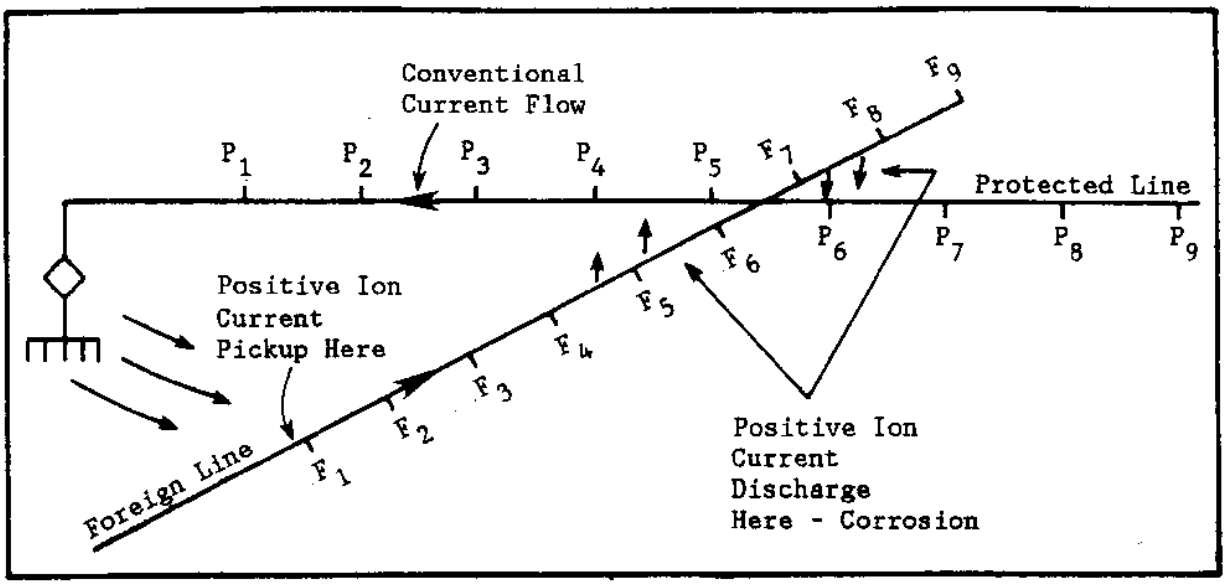

Figure 21
Interference Testing

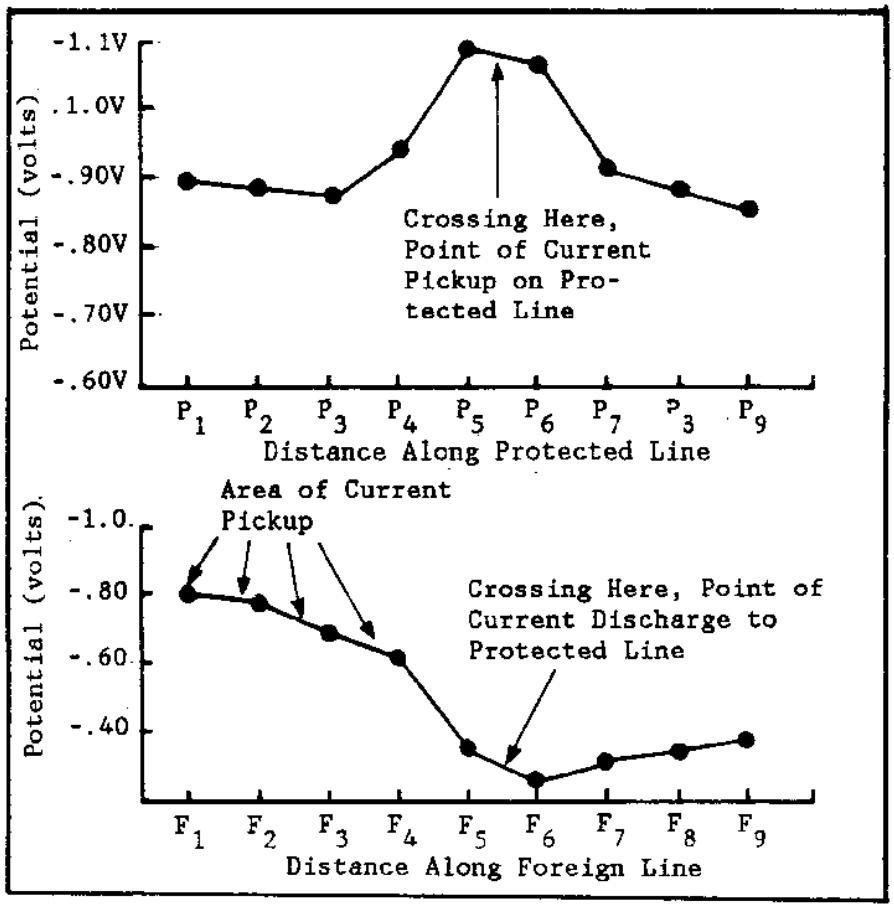

Figure 22
Plot of Potentials from Interference Test

Table 7
Results of Structure-to-Electrolyte
Potential Measurements

TEST POINT	POTENTIAL VERSUS COPPER/COPPER SULFATE (V)	TEST POINT	POTENTIAL VERSUS COPPER/COPPER SULFATE (V)
P1	-0.883	F1	-0.832
P2	-0.876	F2	-0.810
P3	-0.864	F3	-0.765
P4	-0.927	F4	-0.746
P5	-1.058	F5	-0.421
P6	-1.012	F6	-0.386
P7	-0.881	F7	-0.405
P8	-0.854	F8	-0.413
P9	-0.836	F9	-0.419

Another field measurement associated with interference is the measurement of the current flowing through a structure. As shown in Figure 23, the procedure involves the measurement of the potential drop along a section of the structure which is carrying the current. The section of structure is initially calibrated by passing a known current through the section using the outer set of test leads. Subsequent measurements of the potential drop are then referred to the calibration factor for the structure and the current is calculated. This measurement is called an IR drop test. Test stations are commonly installed on long pipelines to measure the current flowing in them in order to detect changes in the current which could be an indication of either interference or problems with the cathodic protection system on the pipeline.

5.2.1.2 Control of Interference - Anode Bed Location. The single most important factor in controlling interference is the location of the anode bed. In general, the remote anode beds commonly used in impressed current cathodic protection systems cause more problems with interference than do sacrificial anode systems where the anode-to-structure distances are usually in the order of 10 feet or less and the driving potential is small (1 V or less). The influence on foreign structures should be a primary consideration in the location of remote anode beds.

5.2.1.3 Control of Interference - Direct Bonding. One method of correcting interference is to bond the foreign structure to the protected structure. The bonding can either be a direct low-resistance connection or a resistive bond. Figure 24 shows correction of an interference problem by direct bonding. Bonding both pipes together, essentially makes both pipes the protected line. A test station is usually installed at such a location in order to either verify the continuity of the bond, or to measure the current flowing through the bond. To allow for future bonding and testing, a bond station should be installed wherever pipelines cross and at other locations where interference is possible.

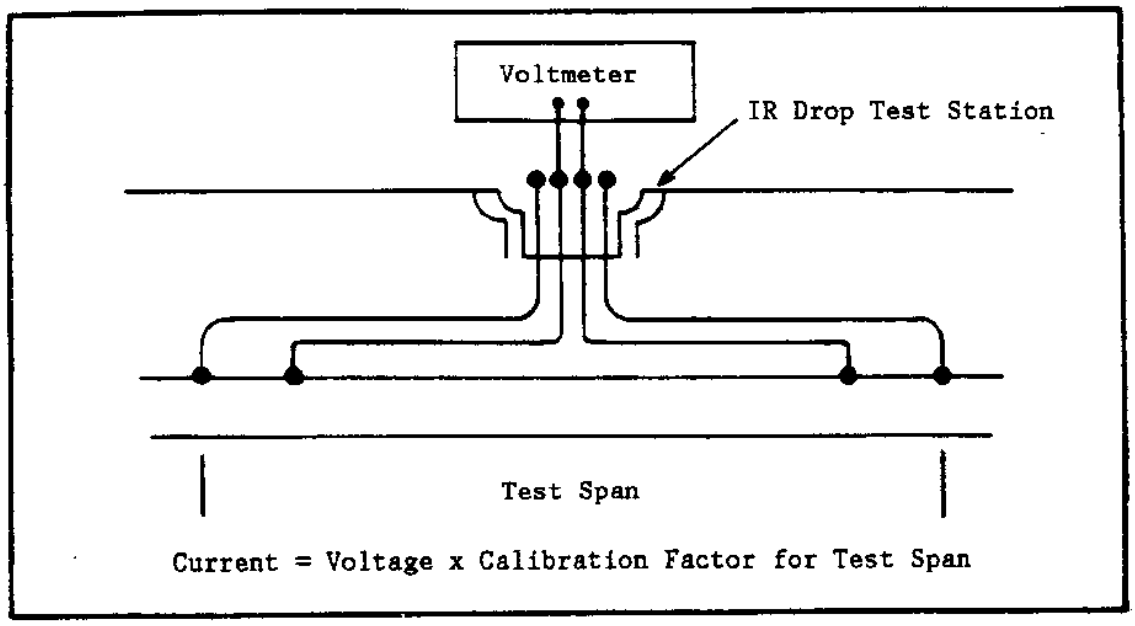

Figure 23
Measurement of Current Flow in Structure

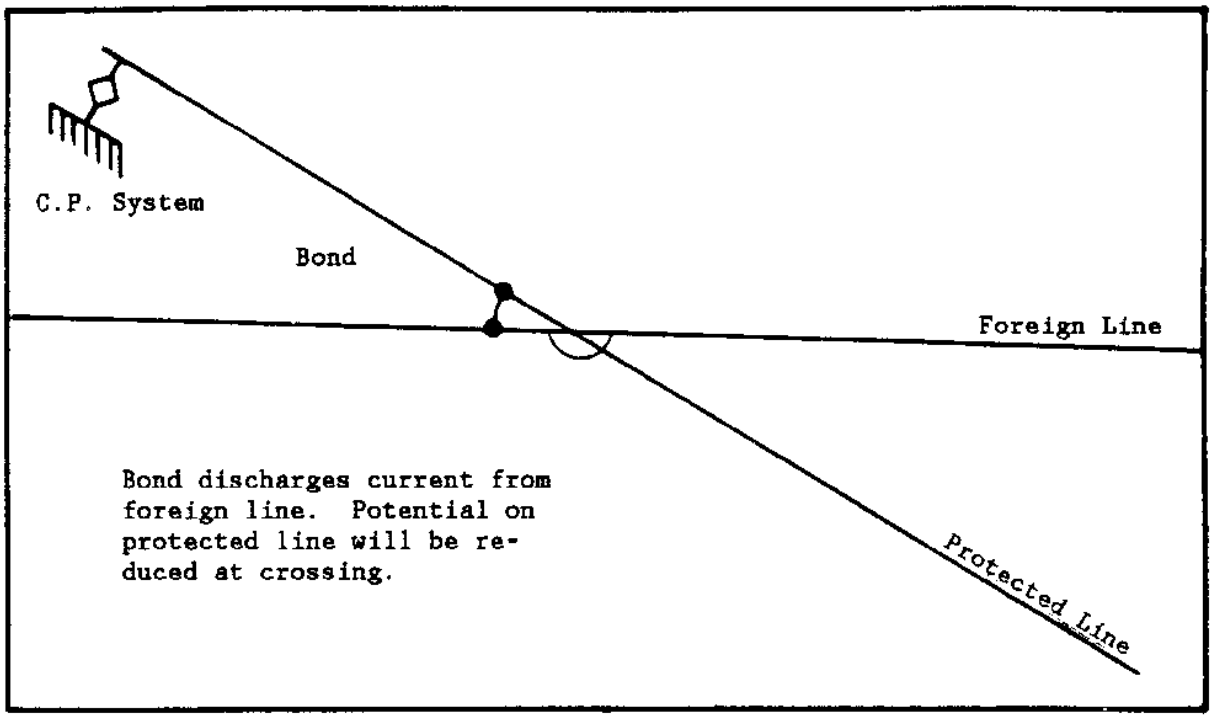

Figure 24
Correction of Interferencce - Direct Bonding

5.2.1.4 Control of Interference - Resistive Bonding. Direct bonding is often not desirable either because the existing cathodic protection system cannot supply enough current to protect both structures, or the foreign structure is not owned by the same organization as the one supplying the current and reducing the current flowing to the foreign structure to minimum levels is desired. In this case, a resistive bond is installed between the structures and adjusted to supply only the correct amount of current to the foreign structure to bring its potential to the same level as it would have been without the protected structure in the vicinity. Figure 25 shows such an installation and Figure 26 shows the potentials measured on both structures. Test stations are normally installed where resistive bonds are used in order to facilitate testing of the corrective action and adjustment of the resistor. The resistor may either be a commercially supplied wire wound adjustable resistor of the proper resistance and current rating or may be fabricated from nichrome resistance wire cut to suitable length in the field and wound into a coil.

Figure 25
Correction of Interference - Resistive Bonding

Adjustment of the resistor to correct the interference is determined by installing a temporary resistive bond and measuring the current through the resistor and the changes in potential achieved by the temporary bonding. The correct value for the bond current can be approximated from these measurements by using the following formula:

EQUATION: $\Delta Et/Id = \Delta Er/It$ and $It = (\Delta Er \times Id)/\Delta Et$ (8)

where

It = correct value of bond current
Id = current through temporary bond
ΔEr = E fn - E fr = change in potential required to clear interference
ΔEt = E fn - E frd = change in potential caused by temporary bond
E fn = natural potential of foreign structure
E fr = potential of foreign structure with no bond
E frd = potential of foreign structure with temporary bond

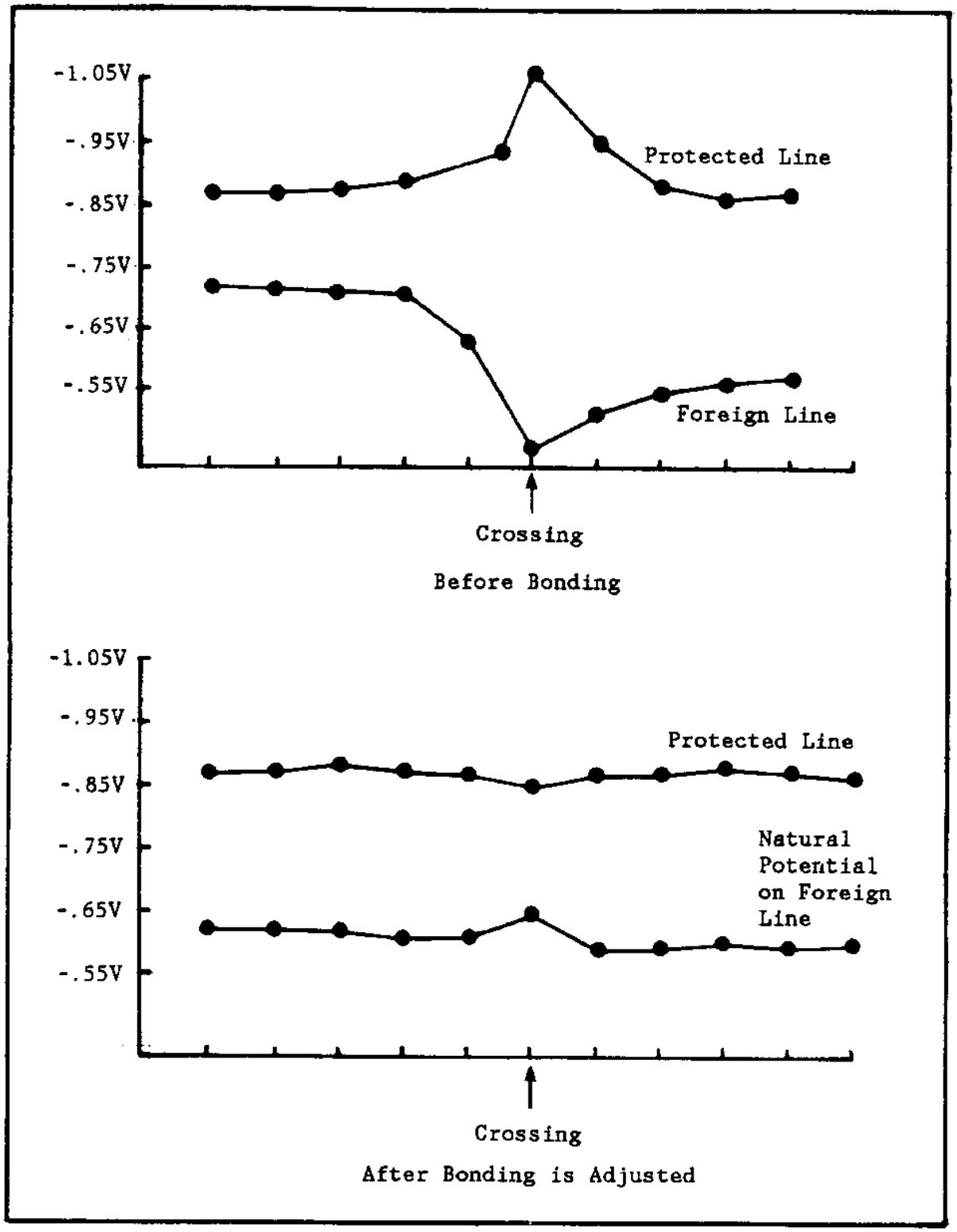

Figure 26
Effects of Bonding on Interference Test Potentials

For a permanent bond, the resistor is adjusted while measuring the potential of the foreign line at the crossing. The amount of resistance is correct when the foreign line potential is equal to E fn (natural potential).

Bonding, as shown in Figure 27, is also used to insure continuity of buried structures both for the prevention of interference and for the proper operation of cathodic protection systems.

5.2.1.5 Control of Interference - Sacrificial Anodes. In some cases, the method used to control interference is to install a sacrificial anode on the foreign structure. This could bring the potential of the foreign structure in the vicinity of the protected structure to the same or higher potential as the protected structure at the crossing, providing current to the foreign line in the opposite direction as the interference current. If the foreign line is well coated the magnesium anode may negate all interference current. If the foreign line has poor coating or is bare and the interference is large, the anode at the crossing will reduce or negate the interference at the crossing, but interference current will still flow from the foreign line at each side of where the anode is connected. In summary, an anode on the foreign line at the crossing will help and in some cases completely cure the interference problem, but in other cases it will not completely solve the interference problem and a resistance bond may still be needed. Use of a sacrificial anode to control interference is shown in Figure 28. The anode should be sized to provide a current in excess of the required bond current.

5.2.2 Effects of High Current Density. Excessive current density can result in hydrogen embrittlement or coating disbondment (refer to para 3.7). In many cases, improper location of the ground beds in an impressed current system or interference from foreign structures can result in uneven current distribution on the protected structure. In order to achieve protective potentials in some areas of the structure, excessive potentials are experienced in other areas of the structure. This situation can be corrected by installing additional anodes or relocating the anode bed to achieve a more even current distribution. In some cases, the structure can be separated into sections and the current distribution improved by the installation of resistive connections between the structure and the rectifier. Excessive potentials are seldom experienced in sacrificial anode systems but if experienced can usually be corrected through the installation of resistors in selected anode lead wires.

5.2.3 Effects of Electrolyte pH. Aluminum and lead should not be cathodically protected in some environments where the pH is greater (more alkaline) than 8.0 (refer to paras. 3.3.1.2 and 3.3.2.1). In tight soils such as clay, the alkali formed around the cathode by cathodic protection will increase the pH to very high levels and cause severe chemical attack on lead and aluminum. Where the electrolyte is water which is moving and exchanged, the alkali formed by cathodic protection can wash away and the adverse effects of cathodic protection on lead and aluminum are reduced. Some types of protective coatings, particularly the alkyds, can also be damaged by highly alkaline environments.

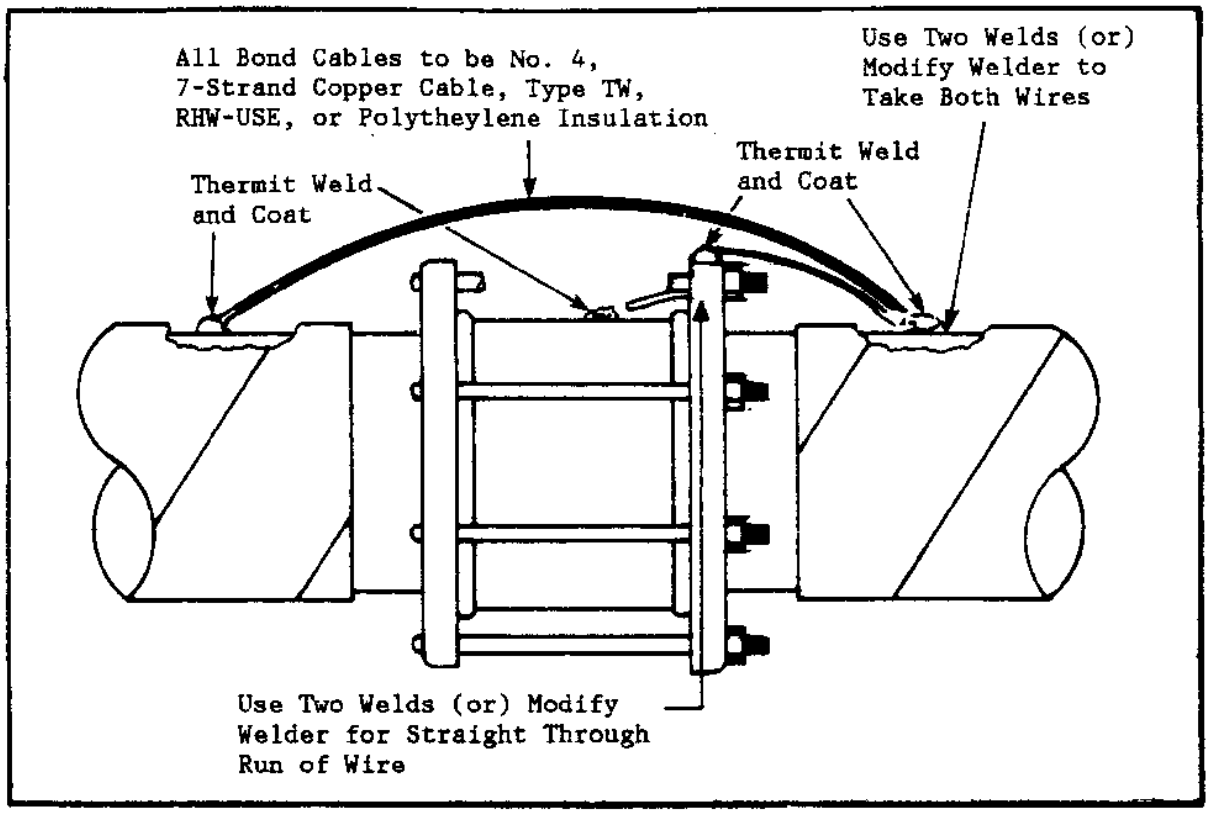

Figure 27
Bonding for Continuity

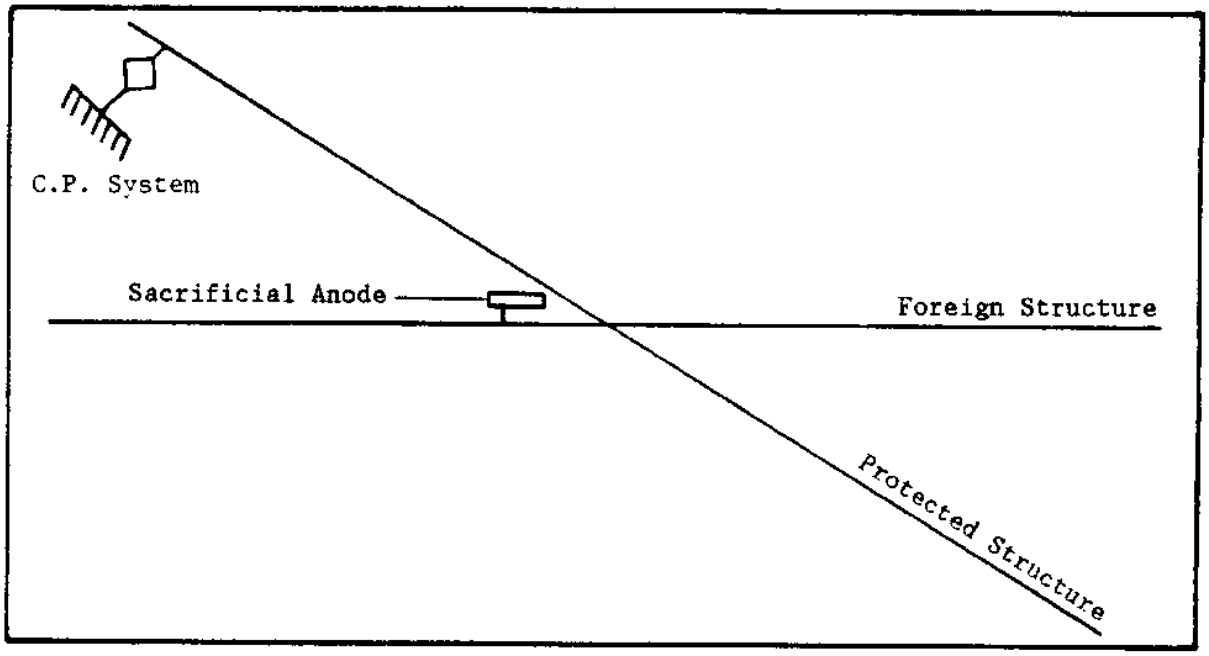

Figure 28
Control of Interference - Sacrificial Anode

Low pH (acidic) conditions can also cause problems with both corrosion and cathodic protection. In soils with a pH lower than 3.0, current density requirements for the protection of steel can be up to 10 times as high as those required for protection of steel in neutral soil. These excessive current requirements make cathodic protection in such environments difficult and costly. The use of high quality coatings in conjunction with cathodic protection in such environments is essential.

5.3 Hazards Associated with Cathodic Protection. Cathodic protection systems, like all other electrical systems, can be dangerous under some circumstances. They can, however, be safely operated under most conditions if the proper precautions are taken in their design, installation, operation, and maintenance.

5.3.1 Explosive Hazards. In areas where flammable liquids or explosive gasses may be present, consideration should be given to the proper design of both impressed current and sacrificial anode cathodic protection systems. Such areas include, but are not limited to, fuel storage farms, fuel terminals and fueling areas, refineries, ammunition depots, and manholes (sewer gas). As the protective currents used for cathodic protection flow through the environment without inherently causing arcing or appreciable resistive heating, cathodic protection can be safely used in such environments. However, cathodic protection rectifiers to be used in such applications should be special oil-immersed explosion-proof types, or should be located outside of the hazardous area. In addition, all connections should be made in explosion-proof housings. In addition to explosive liquid and gas situations, currents from impressed current systems can be picked up on blasting leads and could cause detonation of the blasting caps. Impressed current cathodic protection systems should be turned off whenever there is blasting in the vicinity.

5.3.2 Bonding for Electrical Safety. Electrical bonding is often required for safety where ships, vehicles, or aircraft are fueled or loaded. Any voltage gradient in the soil can result in a potential difference between structures located at different points. These potential differences can result in dangerous arcing. Cathodic protection systems can increase the level of such voltage gradients. The normal electrical bonding used in such circumstances is sufficient to mitigate this hazard.

The voltage gradients produced by cathodic protection systems can also cause arcing when, during pipeline repairs, the pipeline is severed. A temporary bond installed across the pipeline before cutting should be used to prevent this hazard.

Interference caused by docking a vessel in the vicinity of a cathodically protected pier or quaywall can cause accelerated attack on the vessel (see Figure 29). This problem is normally prevented by using a direct bond between the protected structure and the vessel (see Figure 30).

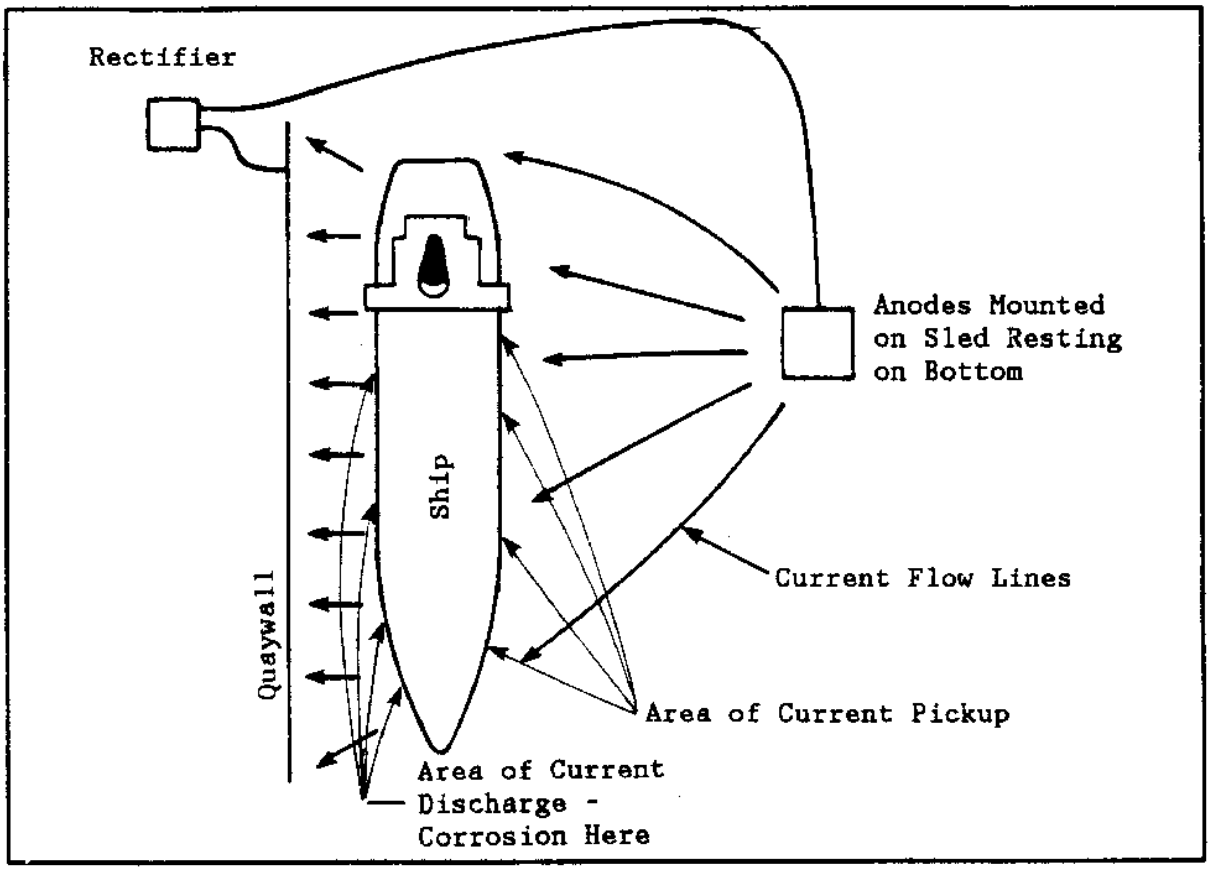

Figure 29
Interference Due to Cathodic Protection of Quaywall

5.3.3 Induced Alternating Currents. As is the case for any large struct in the vicinity of ac electrical transmission lines, ac can be induced on underground or aboveground components of cathodic protection systems, including the structure being protected. This is particularly true if th structure is well coated or isolated from the ground and is oriented parallel to the transmission lines. Pipelines using the same right of wa as the transmission lines are particularly susceptible to induced ac voltages. In addition to causing corrosion damage, these voltages can be dangerous to personnel who may come in contact with the structure or cathodic protection system. The location of the ac transmission lines should be noted during the design of cathodic protection systems. The effects of induced currents and relocation of either the transmission lin or the planned system should also be considered. Location of test statio in areas where induced currents may exist should be particularly avoided. Induced currents should also be considered when performing cathodic protection field surveys or other electrical tests in the vicinity of ac transmission lines.

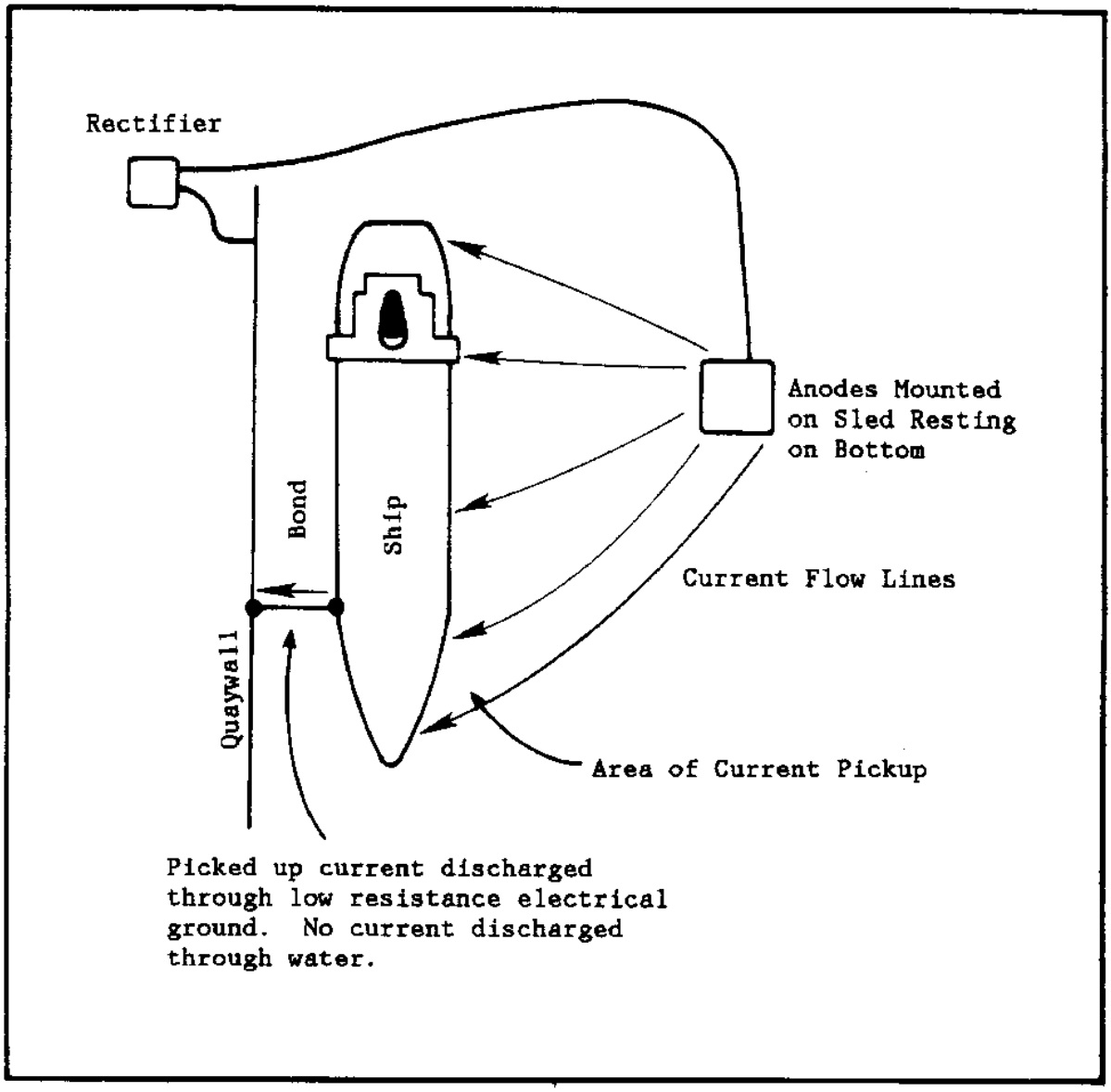

Figure 30
Correction of Interference - Bonding

THIS PAGE INTENTIONALLY LEFT BLANK

Section 6: IMPRESSED CURRENT SYSTEM DESIGN

6.1 Advantages of Impressed Current Cathodic Protection Systems. The primary advantage of impressed current cathodic protection systems over sacrificial anode cathodic protection systems is that the driving potential of the impressed current systems is not limited by the corrosion potential of an active metal. The ability to select appropriate driving potentials, and to adjust the driving potential after system installation, gives the designer and operator of impressed current cathodic protection systems additional flexibility to compensate for changing environmental conditions. The primary advantage of this variable driving potential in the design of impressed current cathodic protection systems is the ability to select the location of the anode beds for an optimum distribution of protective current with a minimum of interference. The variable driving potential available in impressed current systems also allows the protection of structures in high resistivity environments where the output of sacrificial anodes is severely limited. The primary operational benefit of variable driving potential is the ability to adjust the system for changes in soil resistivity, anode condition, structure surface (coating) condition and additions to the structure.

6.2 Determination of Circuit Resistance. In the design of impressed current cathodic protection systems (refer to para. 4.2.6), the first step is the determination of the total current required for the system. This fixes the output current required for the system power supply. The next step is the determination of the required output or driving potential that will be required. As the output current is fixed, the required driving potential will be determined by the total circuit resistance and the back potential offered by the structure-to-anode potential. The equivalent circuit is shown in Figure 31. In most impressed current systems, the major factor in the determination of the total circuit resistance is the anode-to-electrolyte resistance.

6.2.1 Anode-to-Electrolyte Resistance. Also known as "ground bed resistance," this is often the highest resistance in the impressed current cathodic protection system circuit.

6.2.1.1 Effect on System Design and Performance. As shown in Figure 31, the anode-to-electrolyte resistance, if high, is the most important factor in the determination of the driving potential required to provide the current required for effective cathodic protection in impressed current cathodic protection systems. Anode-to-electrolyte resistance can be varied within wide limits by the use of different sized anodes and the use of multiple anodes. The lowest anode-to-electrolyte resistance commensurate with total system cost is desirable since it will reduce the power costs by lowering the output potential of the power supply. This lower power supply output potential also results in higher reliability for other system components, particularly the insulation on cables, splices, and connections. In general, anode bed resistances below 2 ohms are desirable.

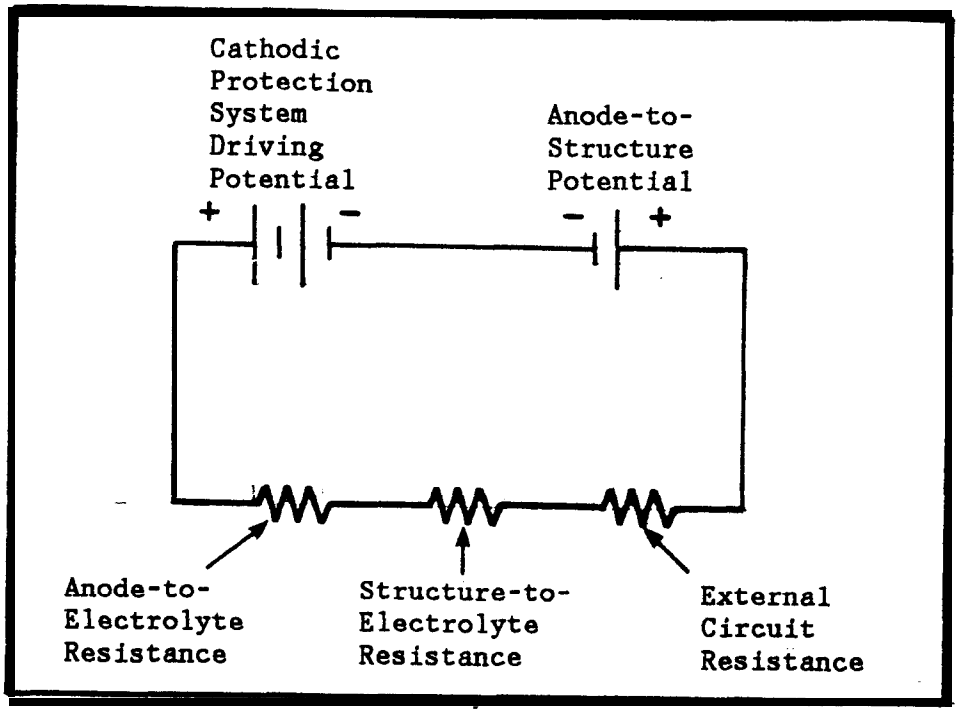

Figure 31
Equavalent Cathodic Protection Circuit

6.2.1.2 Calculation of Anode-to-Electrolyte Resistance. Anode-to-electrolyte resistance can be computed from data on anode type, size, shape, and configuration of multiple anode arrays plus the soil resistivity. First, the type, size, and shape of the anode to be used is chosen. Then, the resistance of a single anode to be used is calculated. Then the effect of the use of multiple anodes is determined. However, as the actual environmental resistivity may not be uniform, or may undergo seasonal variations, the calculation of anode-to-electrolyte resistivity should only be considered to be an approximation of the actual resistance to be encountered. This can result in the actual driving potential required being somewhat different than the potential calculated using the approximate anode bed resistance. Thus, after installation, the driving potential must be adjusted to give the required current output. As the other potentials and resistances in the cathodic protection circuit vary, the system will also require periodic adjustments.

6.2.1.3 Basic Eauations. The formulae developed by H. B. Dwight for a single cylindrical anode can be used to determine the anode-to-electrolyte resistance. The formula for a vertically oriented anode is:

EQUATION: $$R_v = 0.0052\ P/L \times [\ln(8L/d)-1] \qquad (9)$$

The formula for a horizontally oriented anode is:

EQUATION:

$$R_h = 0.0052\ P/L \times \ln\{[4L^2 + 4L(S^2 + L^2)^{½}]/ds\} + s/L - (s^2 + L^2)^{½} - 1 \quad (10)$$

where

R_v = electrolyte-to-anode resistance for a single vertical anode to a remote reference (ohms)
R_h = electrolyte-to-anode resistance for a single horizontal anode to a remote reference (ohms)
P = electrolyte resistivity (ohms-cm) at the location and depth of the anode
L = anode length or backfill column length if backfill is used (feet)
d = effective diameter of anode or backfill column (feet)
s = twice depth of anode (feet)

6.2.1.4 Simplified Expressions for Common Situations. For many common situations, the Dwight formulae have been simplified by combining terms and eliminating terms that have insignificant values in most cases. Some of these simplified formulae have been given in para. 4.2.6. In addition to these simplified formulae, the following simplified formula is often used:

a) Resistance of a Single Vertical Anode

EQUATION:

$$R_v = (P/L)K \quad (11)$$

where

R_v = electrolyte-to-anode resistance for a single vertical anode to remote reference (ohms)
P = electrolyte resistivity (ohms-cm) at the location and depth of the anode
L = anode length (feet) or backfill column length if backfill is used
K = shape function from table below where:
L/d = ratio of length-to-diameter of anode

L/d	K	L/d	K
1	0.008	16	0.0201
2	0.010	18	0.0207
3	0.012	20	0.0213
4	0.013	25	0.0224
5	0.0140	30	0.0234
6	0.0150	35	0.0242
7	0.0158	40	0.0249
8	0.0165	45	0.0255
9	0.0171	50	0.0261
10	0.0177	55	0.0266
12	0.0186	60	0.0270
14	0.0194		

b) Paralleling of Anodes. Common practice to reduce anode bed resistance is to connect several anodes in parallel in a group. The resistance of a group of anodes is less than the resistance for a single anode but is greater than that calculated from the usual parallel resistance formula due to interactions between the fields surrounding each anode. If the anodes are arranged in a parallel row, the resistance of a group of anodes can be approximated by the following formula:

EQUATION: $$R_n = (1/n)R_v + P_s F/S \qquad (12)$$

where

Rn = total anode-to-electrolyte resistance for a group of vertical anodes, equally spaced and in a single row, to remote reference (ohms)
n = number of anodes
R_v = electrolyte-to-anode resistance for a single vertical anode to remote reference (ohms)
P_s = electrolyte resistivity (ohms-cm) with pin spacing equal to S
S = anode spacing (feet)
F = paralleling factor from table below:

n	F	n	F
2	0.00261	12	0.00182
3	0.00289	14	0.00168
4	0.00283	16	0.00155
5	0.00268	18	0.00145
6	0.00252	20	0.00135
7	0.00237	22	0.00128
8	0.00224	24	0.00121
9	0.00212	26	0.00114
10	0.00201	28	0.00109
		30	0.00104

If multiple rows of anodes are used where the spacing between rows is more than 4 times the spacing between the anodes in each row, the usual parallel resistance formula:

$$1/R = 1/R_1 + 1/R_2 + 1/R_3 + 1/R_4 + \ldots$$ may be used.

c) Special Formula for Water Tanks. For water tanks where circular arrays of anodes are commonly used and where the structure surrounds the anodes and electrolyte, special formulae have been developed to calculate the anode-to-electrolyte resistance. For a single cylindrical anode, the formula developed by E. R. Shepard may be used. The formula is as follows:

EQUATION: $$R = 0.012\ P \log (D/d)/L \qquad (13)$$

where

R = anode-to-electrolyte resistance (ohms)
P = water resistivity (ohms-cm)
L = length of a single anode (feet) (backfill is not used)
D/d = ratio of anode diameter (d) to tank diameter (D) (same units for each)

The anodes are usually arranged in a circular array in the tank bowl. The optimum diameter of this array can be determined by the following formula:

EQUATION:
$$r = DN/2(B + N) \qquad (14)$$

where

r = radius of anode array (feet)
D = tank diameter (feet)
N = number of anodes

If four or more anodes are used in a circular array, the following modified Shepard formula should be used to calculate the resistance of the array:

EQUATION: $$R = 0.012\ P \log (D/a)/L \qquad (15)$$

where

a = factor for equivalent diameter from table below, multiplied by the optimum diameter of the anode circle (calculated previously)

Number of Anodes in Circle	Factor for Equivalent Diameter
4	0.08
6	0.11
8	0.18
10	0.28
12	0.43
14	0.70

P = water resistivity (ohms-cm)
L = length of a single anode (feet)
D = tank diameter (feet)

6.2.1.5 Field Measurement. Calculations, as previously discussed, can give good approximations of anode-to-electrolyte resistance under actual conditions. While these calculations can be effectively used for system design, if the environment is well known, the actual anode-to-electrolyte

resistance that is encountered is sometimes sufficiently different from the calculated value to require adjustment or modification of the system. The actual anode-to-electrolyte resistance can also be determined by actual field measurements.

a) Anode First Method. In this method of determining anode-to-electrolyte resistance, the anodes are installed as designed and the actual resistance between the anode or anode bed and the structure to be protected is measured. This measurement includes both the anode-to-electrolyte resistance and the structure-to-electrolyte resistance and can be used to determine the required driving potential so that the proper power supply can be ordered. This is the most accurate method of sizing the needed rectifier and should be used where practical.

b) Power Supply First Method. In this method, the power supply is ordered based upon the calculated circuit resistance and is installed and connected to the structure. The anodes are installed as planned, but one at a time. The total circuit resistance is calculated based upon the actual power supply output in amperes and volts. If additional anodes are required in order to achieve the desired anode-to-electrolyte resistance, they can be installed at this time at a relatively low cost since the equipment required for installation is on site and excavations for the anode lead cables are open.

6.2.1.6 Effect of Backfill. Backfill is very important and is usually used to surround impressed current anodes in order to reduce anode-to-electrolyte resistivity, to increase porosity around the anodes to insure that any gasses formed during operation will be properly vented, and to reduce polarization effects and reduce localized dissolution of the anode. Under favorable circumstances, the anode-to-electrolyte resistivity can be reduced to one-half through the use of backfill. In extremely low resistance environments such as seawater, graphite and high silicon cast iron anodes can be used without backfill; otherwise, impressed current anodes should always be used with backfill. In high resistivity environments where the use of backfill is impractical, graphite anodes should not be used. High silicon chromium bearing cast iron (HSCBCI) anodes can be used with or without backfill in most instances. The cost of using backfill should be evaluated on an economic basis with the reduction in the power requirements or the number of anodes required being the cost reduction factors. If the resistivity of the backfill is less than one-tenth the soil resistivity, then the voltage drop through the backfill becomes negligible.

a) Thus, the effective diameter of the anode is the diameter of the backfill rather than the diameter of the anode itself. As can be evaluated through calculation of anode-to-electrolyte resistance, this can result in a significant reduction in anode-to-electrolyte resistance which can be useful in reducing the number of anodes required, the required driving potential, or both. Backfill for impressed current anodes is carbonaceous material from several sources. It can be either coke breeze (crushed coke), flake graphite, or round particle petroleum coke. Experience has shown that round particle calcined petroleum coke has many advantages over coke breeze made from coal. Specification "Loresco DW-2" or equal should be used for surface anode beds and Loresco DW-3 or equal for deep anode beds. Because the material can be pumped and has good porosity and particle-to-particle contact, round particle petroleum coke backfill is the most desirable material and its higher cost will be justified for most installations, particularly for "deep anodes."

b) In areas where the soil is extremely wet or loose, such as in a swampy area, it may not be possible to properly install or tamp the backfill material. Packaged anodes with the backfill contained in metal cylinders (cans) surrounding the anodes may be useful in these circumstances but increase the cost. Anodes prepackaged with backfill, usually contained in metal cans which are rapidly corroded away during operation, are easier to install than separate installation of anode and backfill. The prepackaged anodes are higher in cost and have the following additional disadvantages:

(1) High unit weight reduces ease of handling.

(2) Possibility of voids developing in backfill during transportation and handling.

(3) The critical anode cable and connection between the anode and cable are hidden and difficult to inspect.

The choice of packaged versus unpackaged impressed current anodes must be made based upon economics and local site conditions. Packaged anodes are usually used only where unstable soil conditions exist, where the hole excavated for installation caves in, and where prepackaged anodes are stocked for augmenting systems.

6.2.2 Structure-to-Electrolyte Resistance. The structure-to-electrolyte resistance is commonly disregarded in the design of impressed current cathodic protection systems since it is usually very small with respect to the anode-to-electrolyte resistance. When total circuit resistance is measured (refer to para. 6.2.1.5), the structure-to-electrolyte resistance is included in the value obtained.

6.2.3 Connecting Cable Resistance. The connecting cable resistance is determined by the size and length of cables used. The selection of appropriate wire sizes is described in para. 6.6.1.

6.2.4 Resistance of Connections and Splices. In addition to the fact that connections and splices are sources of resistance in impressed current cathodic protection systems, they are a site of failure. These connections should be kept to an absolute minimum, and they should be very carefully assembled, insulated, inspected, and installed. The cable from the positive lead of the power source to the anodes carries a high positive charge and will deteriorate rapidly at any point where the insulation is breached and the conductor contacts the electrolyte. The number and location of each connection should be installed per the system design and not at the discretion of the installer.

6.3 Determination of Power Supply Requirements. The power supply requirements, namely current and voltage, are determined by Ohm's Law from the required current for protection of the structure and the calculated or measured total circuit resistance. The actual power supply requirement should allow for future loads and rectifier aging. Generally, a factor of 1.5 over calculated output is used.

6.4 Selection of Power Supply Type. Any source of direct current of appropriate voltage and current can be used as a source of power for impressed current cathodic protection systems. The selection of power supply depends upon local conditions at the site and should be evaluated based upon life cycle cost including maintenance and availability of ac power or fuel.

6.4.1 Rectifiers. Rectifiers are by far the most commonly used power supply type for impressed current cathodic protection systems. They are available in a wide variety of types and capacities specifically designed and constructed for use in impressed current cathodic protection systems. The most commonly used type of rectifier has an adjustable step down transformer, rectifying units (stacks), meters, circuit breakers, lightning arresters, current measuring shunts, and transformer adjusting points (taps), all in one case.

6.4.2 Thermoelectric Generators. These power supplies convert heat directly into direct current electricity. This is accomplished through a series of thermocouples which are heated at one end by burning a fuel and cooled at the other, usually by cooling fins. Thermoelectric generators are highly reliable since they have few, if any, moving parts. They are available in sizes from 5 to 500 W. They are very expensive and should only be considered for remote locations where electrical power is not available and fuel is available. They are used as a power supply for impressed current cathodic protection on remote pipelines where the product in the pipeline can be used as a fuel.

6.4.3 Solar. A photovoltaic solar cell converts sunlight directly into direct current electricity. The cost per W is high but is decreasing as solar cell technology is improved. Solar panels are used for cathodic protection power supplies at remote sites where neither electrical power or fuel is available. In order to supply current continuously, solar cells are used in a system that supplies power to the system and recharges batteries when sunlight is received. When sunlight is not being received, the batteries supply the required current.

6.4.4 Batteries. When current requirements are low, storage batteries can be used to supply power for impressed current cathodic protection systems at remote sites. They must be periodically recharged and maintained.

6.4.5 Generators. Engine- or wind-driven generators can be used to supply direct current power for impressed current cathodic protection systems at sites where ac power is not available.

6.5 Rectifier Selection. The rectifier selected for a specific impressed current cathodic protection application must be matched to both the electrical requirements and the environmental conditions at the site. Rectifiers are available in many electrical types and specifically designed for use in impressed current cathodic protection systems in many environments.

6.5.1 Rectifier Components. Figure 32 is a circuit diagram for a typical single-phase full-wave bridge type rectifier showing the components found in most standard rectifiers of this type. The diagram also shows an external switch and circuit protection device which is mandatory for all DOD rectifier installations.

6.5.1.1 Transformer Component. The transformer reduces the incoming alternating current voltage to the alternating current voltage required for the operation of the rectifing component. In most impressed current cathodic protection rectifiers, the voltage output from the secondary windings can be varied by changing the effective number of secondary windings through a system of connecting bars or "taps." Two sets of taps are normally present, one for coarse adjustments and one for fine adjustments. By manipulation of these taps, the voltage should be adjustable to vary the rectifier voltage from zero, through at least 20 equal steps, to its maximum capacity.

6.5.1.2 Rectifying Elements. The alternating current from the secondary windings of the transformer element is converted to direct current by the rectifying elements or "stacks." The stack is an assembly of plates or diodes and may be in several configurations. The most common rectifying elements are selenium plate stacks and silicon diodes. Each has advantages and disadvantages as discussed in para. 6.5.3.8. The most common configurations of rectifying elements are the single-phase bridge, single-phase center tap, three-phase bridge, and three-phase wye. These arrangements are described in detail in para. 6.5.2. The rectifying elements allow current to flow in one direction only and produce a pulsating direct current. The rectifying elements do allow a small amount of alternating current to pass. This "ripple" is undesirable and should be held to low levels. Rectifiers are not 100 percent efficient in converting alternating current to direct current. This is due to the presence of alternating current and to inherent losses in the rectifying elements which result in heating of the stacks. Silicon elements are more efficient than selenium elements at high output voltages but are more susceptible to failure due to voltage overloads or surges. The efficiency of a rectifying element is calculated by the following equation:

EQUATION:

$$\text{Efficiency (\%)} = \frac{\text{dc output power}}{\text{ac input power}} \times 100 \qquad (16)$$

Typical efficiencies of single-phase rectifying elements are in the order of 60 to 75 percent but can be increased by filtering the output or by using a three-phase circuit. Selection of appropriate circuit type is discussed in para. 6.5.2. Selection of silicon versus selenium rectifying elements is discussed in detail in para. 6.5.3.8.

6.5.1.3 Overload Protection. Overload protection in the form of either circuit breakers, fuses, or both should be used on all impressed current rectifiers. In addition to protecting the circuits from overloads, circuit breakers provide a convenient power switch for the unit. Circuit breakers are most commonly used on the alternating current input to the rectifiers and fuses are most commonly used on the direct current outputs. In addition to circuit breakers and fuses, the rectifier should be furnished with lightning arresters on both the ac input and dc output in order to prevent damage from lightning strikes or other short duration power surges. The respective firing voltages of the lightning arresters should be higher than the ac input and dc

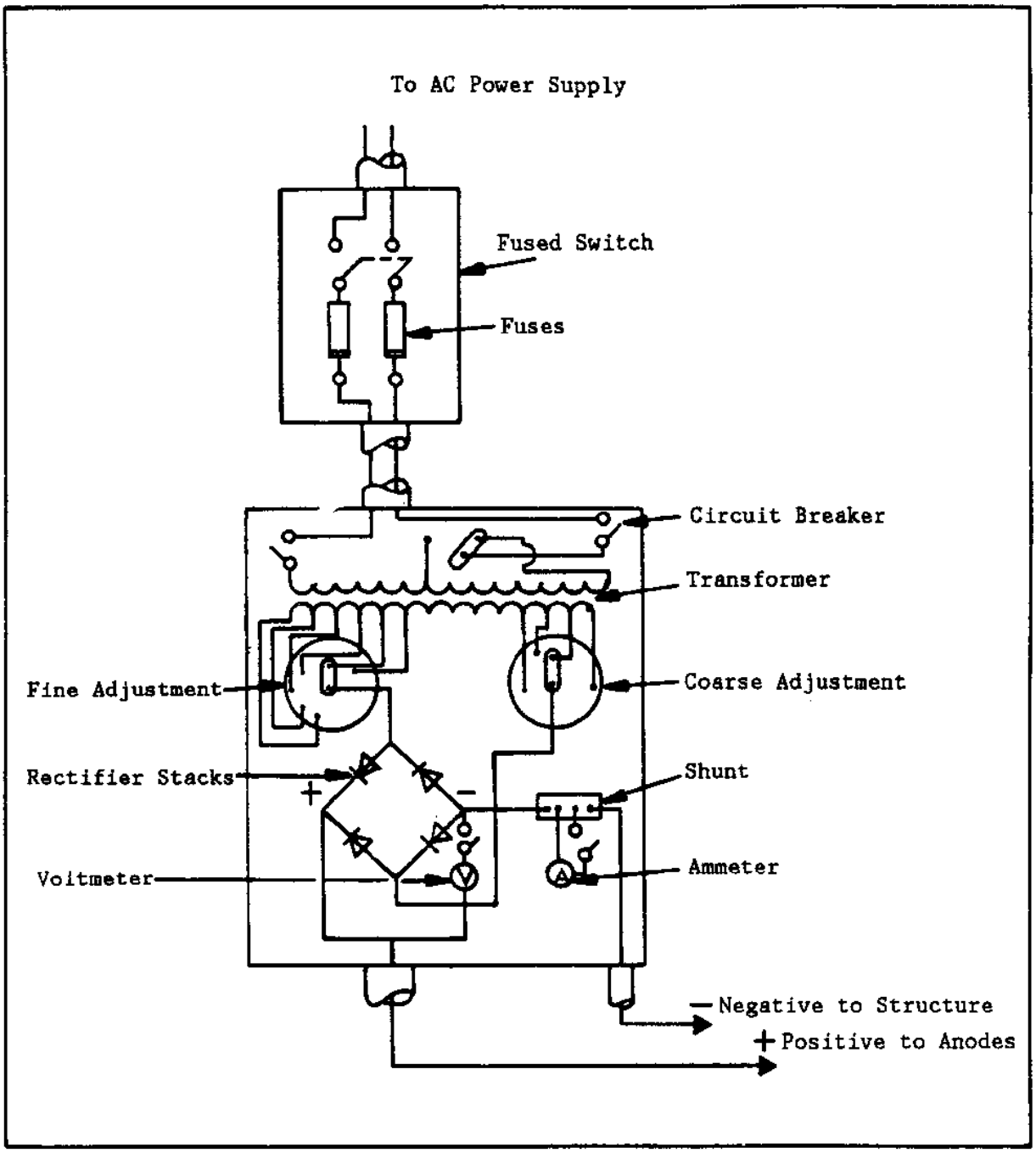

Figure 32
Single-Phase - Full-Wave Bridge Rectifier

output voltage. Due to their susceptibility to damage from voltage surges, silicon diodes shall also be protected by selenium surge cells or varistors and by current limiting fuses against over-current surges. A high speed rectifier fuse should be installed in one leg of the ac secondary and one in the dc negative output leg.

6.5.1.4 Meters. In order to conveniently measure the output current and potential, the rectifier should be furnished with meters for reading these values. The meter should not be continuously operating but should be switched into the circuit as required. This not only protects the meter from electrical damage from surges but, when the meter is read, it moves from zero to the indicated reading. Frozen meter movements are easily detected in this manner. Often, one meter and a two position switch are used to measure both potential and current. Current is usually measured using an external current shunt. Output voltage and current can also be conveniently measured by the use of portable meters used across the rectifier output and the current shunt.

6.5.2 Standard Rectifier Types

6.5.2.1 Single-Phase Bridge. The circuit for this type of rectifier is shown in Figure 32. This type of rectifier is the most commonly used type of rectifier up to an output power of about 1,000 W. Above 1,000 W, the extra cost of three-phase types is often justified by the increased electrical efficiency of the three-phase units. The rectifying unit consists of four elements. If any one of the rectifying elements fails or changes resistance, the other elements usually also fail. Current passes through pairs of the rectifying elements through the external load (structure and anode circuit). The active pair of elements alternates as the polarity of the alternating current reverses while the other pair blocks the flow of current. The result is full-wave rectified current as shown in Figure 33.

6.5.2.2 Single-Phase Center Tap. The circuit of a single-phase center tap rectifier is shown in Figure 34. This type of rectifier has only two rectifying elements but produces full-wave rectified output. However, since only one-half of the transformer output is applied to the load, the transformer required is considerably heavier and more costly than in single-phase bridge type units. This type of unit is also less sensitive to adjustment than the single-phase bridge type; however, it is electrically more efficient.

6.5.2.3 Three-Phase Bridge. The circuit for a three-phase bridge rectifier is shown in Figure 35. The circuit operates like three combined single-phase bridge circuits that share a pair of diodes with one of the other three bridges. There are three secondary windings in the transformer that produce out-of-phase alternating current supplied to each pair of rectifying elements. This out-of-phase relationship produces a direct current output with less alternating current "ripple" than the single-phase type, only 4.5 percent. Due to the reduction in alternating current ripple, three-phase bridge rectifiers are more electrically efficient than the single-phase types, and the extra initial cost of the unit is often justified by savings in supplied power, particularly for units of over 1,000 W capacity.

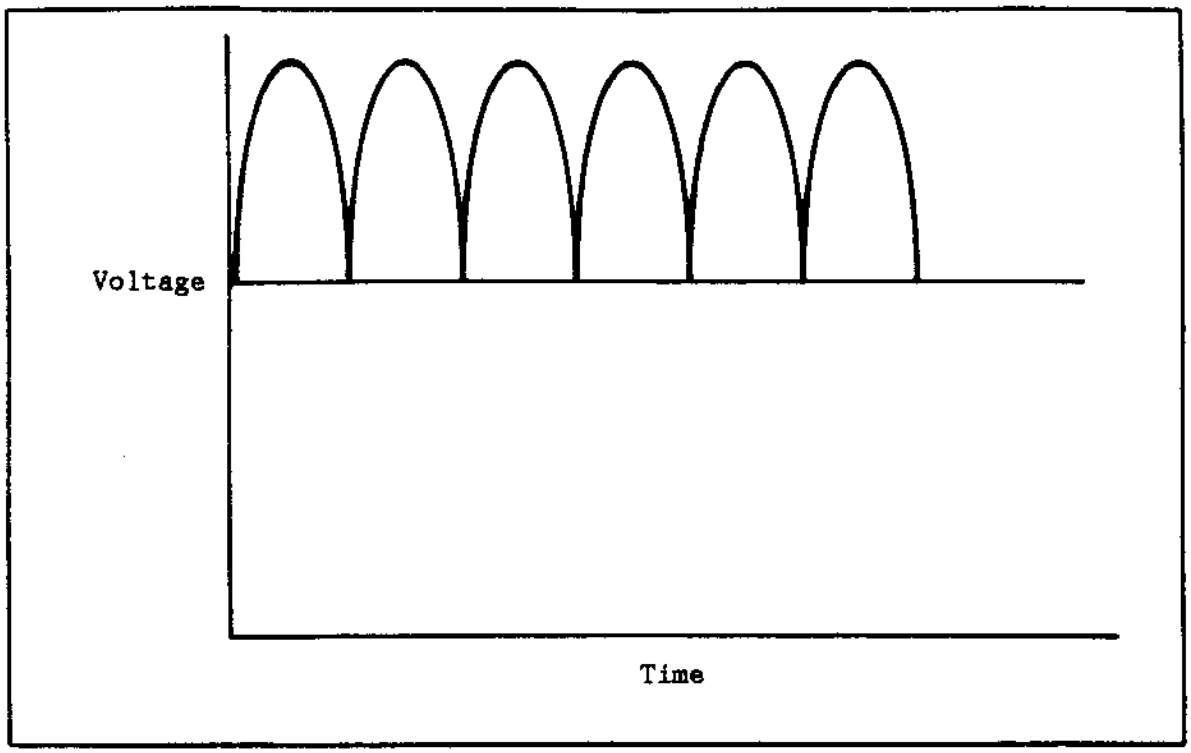

Figure 33
Full-Wave Rectified Current

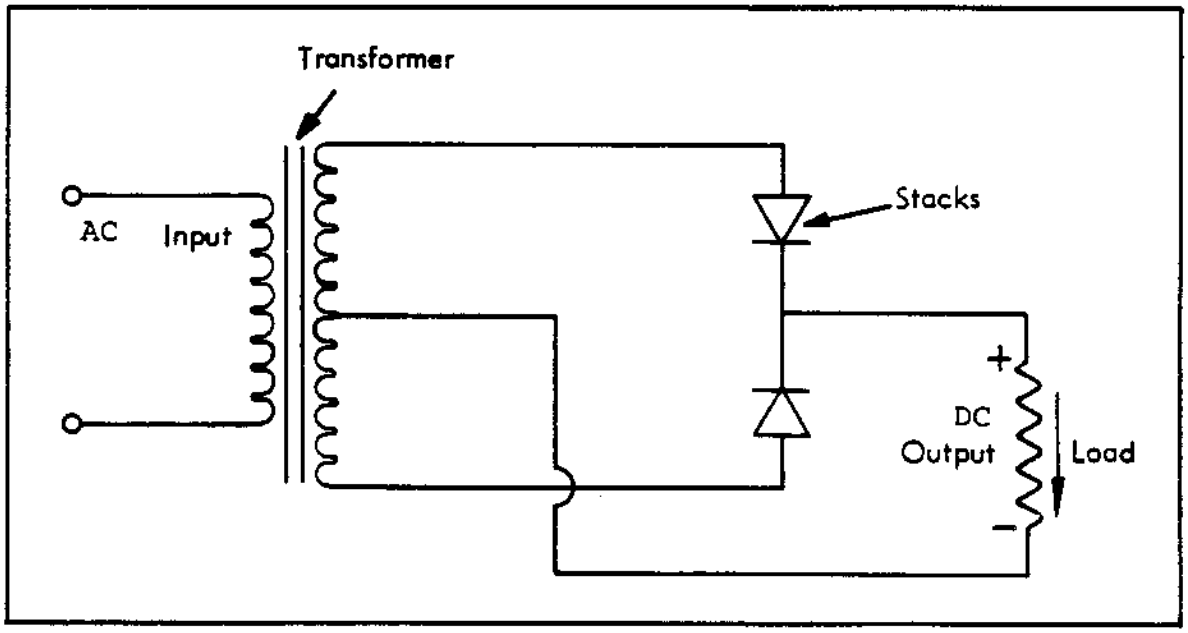

Figure 34
Single-Phase - Center Tap Circuit

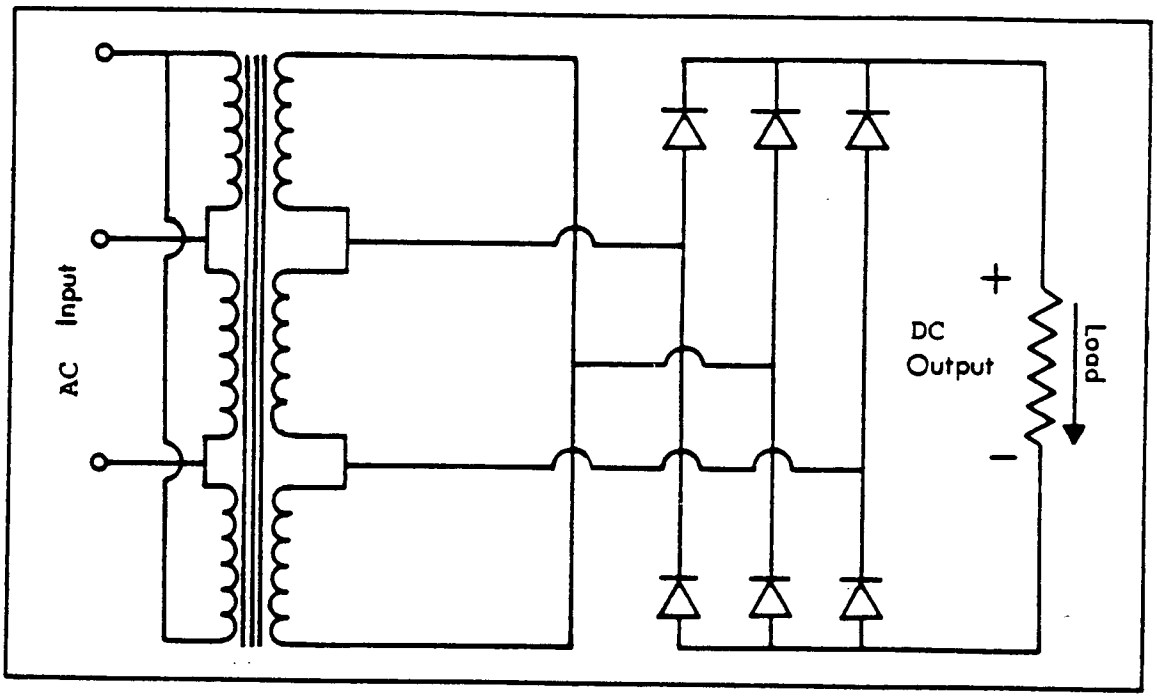

Figure 35
Three-Phase Bridge Circuit

6.5.2.4 Three-Phase Wye. The circuit for a three-phase wye rectifier is shown in Figure 36. This type of rectifier supplies half-wave rectified current as shown in Figure 37. The power to the rectifier unit is supplied by three separate windings on a transformer, but only three rectifying elements, each in series with the output, are provided. This type of rectifier unit is practical only for systems requiring low output voltages.

6.5.2.5 Special Rectifier Types. Several special types of rectifiers, specifically designed for use in cathodic protection systems have been developed for special applications. Some special rectifiers provide automatic control of current to maintain a constant structure-to-electrolyte potential, others provide a constant current over varying external circuit resistances, or other features desirable in specific circumstances.

a) A constant current rectifier is depicted by a block diagram in Figure 38. A direct current input signal to the power amplifier is supplied from an adjustable resistor in the output circuit. The power amplifier uses this "feedback" signal to adjust the voltage supplied to the stack so that a constant input signal and, therefore, a constant output current are supplied. The power amplifier may either be of an electronic (silicon controlled rectifier) or saturable reactor type.

b) An automatic potential control type is shown by a block diagram in Figure 39. This type of unit uses the potential between the structure and a reference electrode to control the output current of the unit. As in the constant current type of rectifier, the power amplifier can be of the electronic or saturable reactor type. These rectifiers are commonly used where the current requirement or circuit resistance varies greatly with time such as in the case of structure in an area with high periodic tidal currents or a water storage tank where the water level changes considerably.

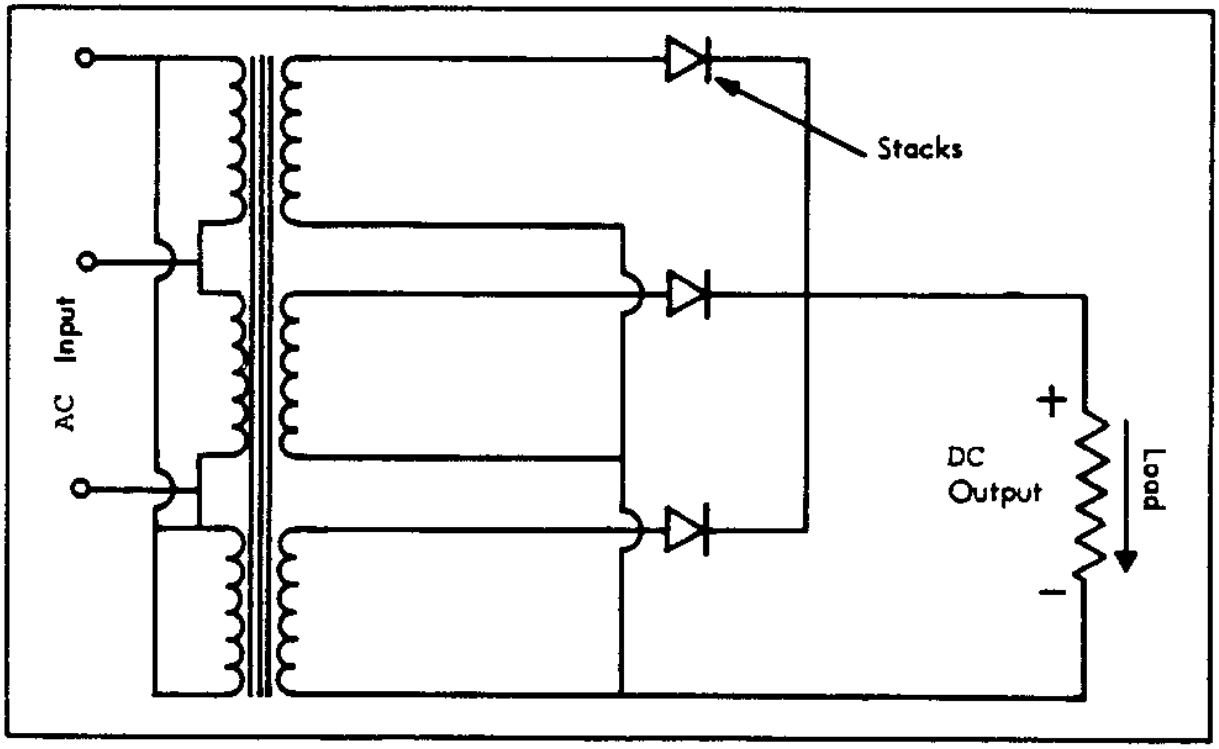

Figure 36
Three-Phase Wye Circuit

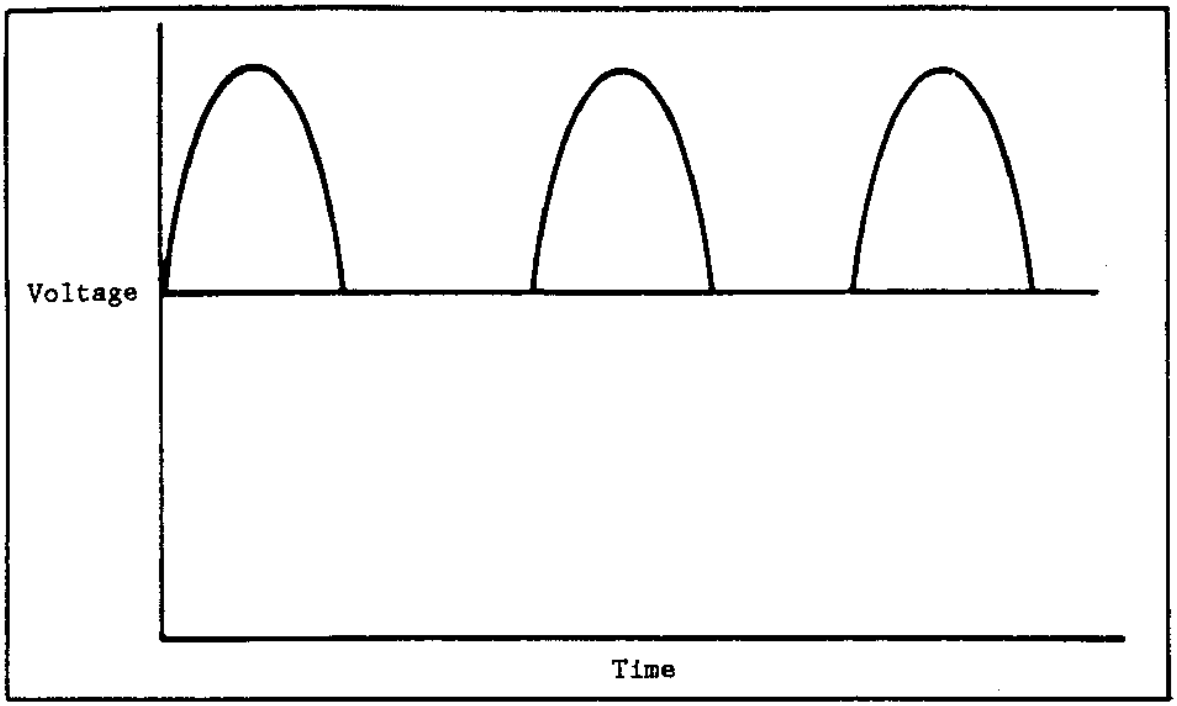

Figure 37
Half-Wave Rectified Current

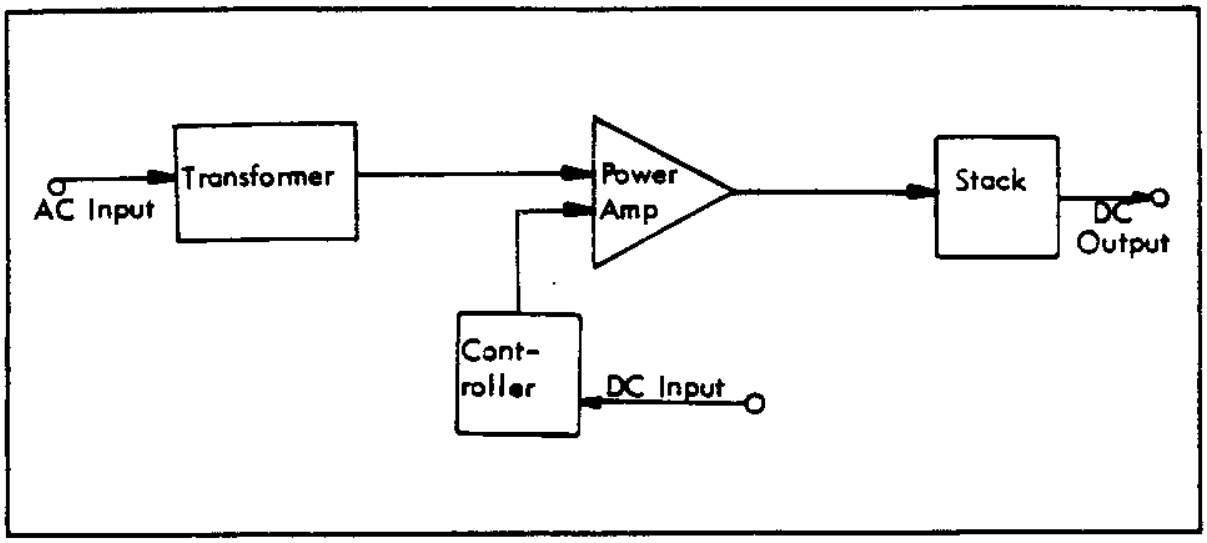

Figure 38
Constant Current Rectifier

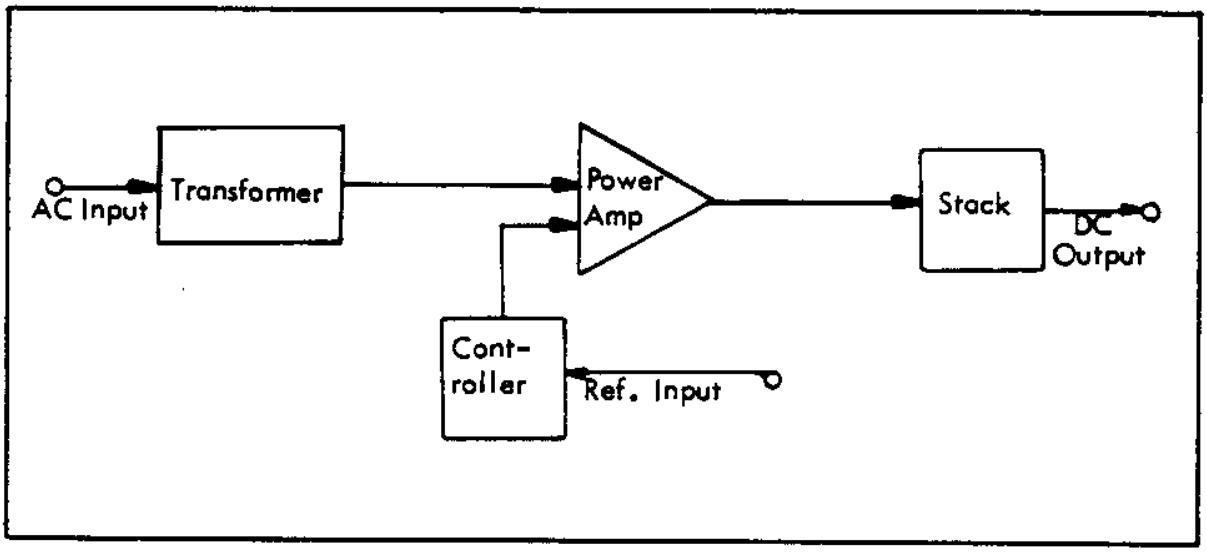

Figure 39
Constant Potential Rectifier

c) Multicircuit constant current type is depicted by a circuit diagram in Figure 40. This type of rectifier is designed to provide a small, constant current in the order of 100 mA to a single anode. As the resistance of the internal resistor is high when compared with the extern circuit resistance, the output current is controlled by the value of this resistor. The output potential will vary up to the line voltage to suppl the specified output current. In this type of circuit, the structure is connected directly to the neutral lead of the alternating current power supply. Due to problems associated with stray currents and the possible presence of high voltages external to the rectifier units, the use of thi type of rectifier is not recommended.

Several standardized rectifiers have been developed for commercial applications such as natural gas and electrical distribution system protection. The use of a standardized unit allows for economy of production and reduction in overall cost of the unit as well as the installation and maintenance of the unit. Where a large number of simila capacity units are to be used, the selection of a standardized type of rectifier should be considered.

6.5.3 Rectifier Selection and Soecifications. Rectifiers can either be selected from "stock" units or can be custom manufactured to meet specifi electrical and site-related requirements. Many features are available either as "add on's" to stock units or in custom units.

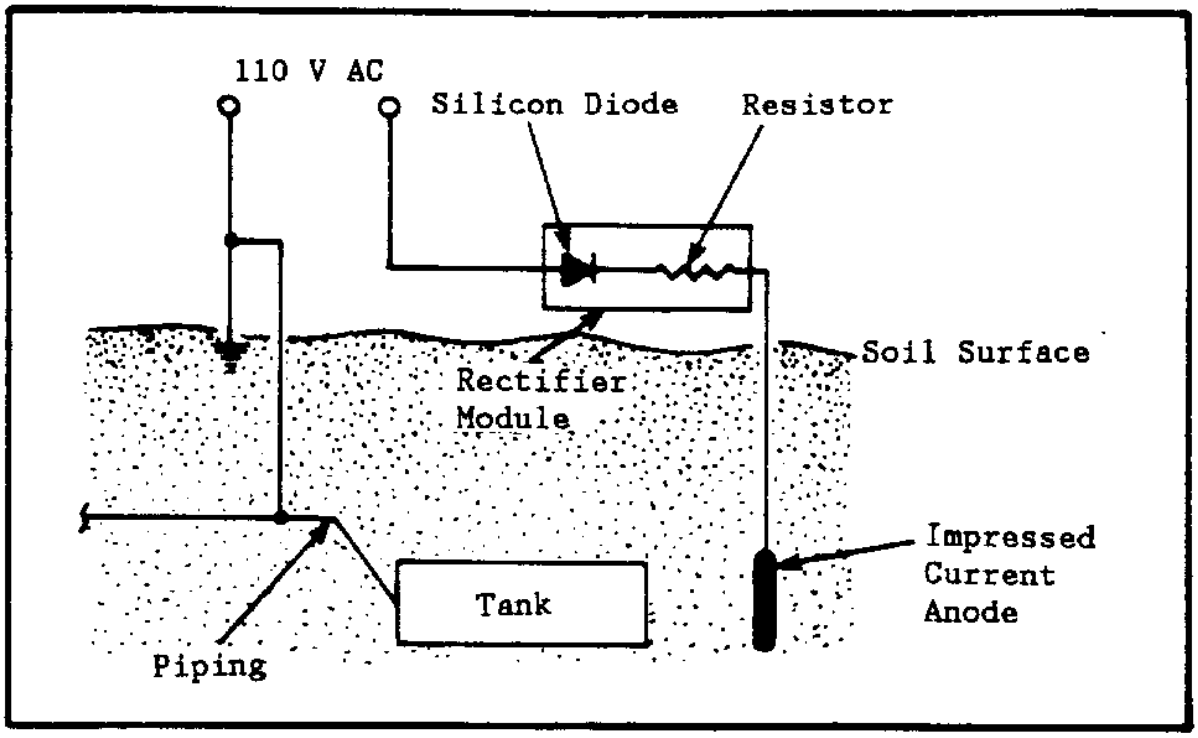

Figure 40
Multicircuit Constant Current Rectifier

6.5.3.1 Available Features. Features now available on most units include:

a) Constant voltage or current output

b) Multiple circuits in the same enclosure

c) Air cooled or oil immersed

d) Any commercial input voltage

e) Three phase or single phase

f) Center tap or bridge

g) Wide range of output currents and voltages

h) Efficiency filters to reduce ac ripple

i) Interference noise filters

j) Explosion proof enclosures

k) Small arms proof enclosures

l) Lightning protection on both ac input and dc output

m) Surge protection on both ac input and dc output

n) Silicon diodes or selenium stacks

o) Painted or galvanized cases

p) Various mounting legs or brackets

q) Units designed for direct burial

r) External "on-off" indicators

s) Variety of price, quality and warranty

t) Maintenance free anodized aluminum enclosure

Factors that should be considered in selecting appropriate features for a specific application are given below.

6.5.3.2 Air Cooled Versus Oil Immersed. Rectifiers can be supplied as either entirely air cooled, entirely oil immersed or with the stacks only oil immersed. Air-cooled units are lowest in cost and easiest to install and repair. However, oil-cooled units should be specified where corrosive or dirty atmospheric conditions are encountered or where explosive gasses may be present. The controls should not be immersed in the oil. Air-cooled units require more frequent maintenance to clean the air screens and other components and are also susceptible to damage by insects an other pests. Older oil-cooled units were supplied with oils containing polychlorinated biphenyls (PCBs) which have been determined to be carcenogenic and are no longer supplied with new units. Units containing PCBs should be treated according to current policy regarding PCBs.

6.5.3.3 Selecting ac Voltage. Select alternating current voltages of almost any commercial power supply voltage. Units with either 115 V, 230-V or 440-V single-phase or 208-, 230-, or 440-V three-phase inputs are the most common. Some units are supplied with dual input voltage selected by wiring arrangements during installation. Choices between single-phase and three-phase units should be based upon a balance between first cost and efficiency as discussed in para. 6.4.2. The following table can be used to select the combinations of rectifier capacity and input voltages which are commonly most economical if a selection of supply voltages is available:

RECTIFIER dc RATING (W)	SINGLE-PHASE VOLTAGE	THREE-PHASE VOLTAGE
Up to 2,700	115	208
2,700 to 5,400	230	230
5,400 to 7,500	440	230
Over 7,500	440	440

6.5.3.4 dc Voltage and Current Output. Direct current voltage outputs from 8 to 120 V and current outputs from 4 A to 100 A are common. Almost any current can be provided but it is generally best to select a smaller standard size rectifier unit such as 20 A and use multiple units if very large amounts of current are required. Many small units cause far less interference and provide more uniform current distribution along the protected structure than few large units.

6.5.3.5 Filters. Electrical filters are used to both increase the efficiency of the rectifier by reducing alternating current ripple and to reduce interference with communications equipment. Efficiency filters can increase the efficiency of single-phase bridge type rectifiers by 10 to 14 percent and their use should be based upon a first cost versus operating (power) cost basis. Efficiency filters are not commonly used with three-phase rectifiers as the alternating current ripple in these units is inherently low. Noise interference filters should be used when a large unit is to be installed in the vicinity of communications lines or can be retrofitted when noise problems are encountered and are significantly affected by turning the unit on and off.

6.5.3.6 Explosion Proof Rectifiers. Rectifiers and other system components such as switch and circuit breakers are available in explosion proof enclosures conforming to Electrical Safety Standards for Class I Group D hazardous conditions that may be encountered in fuel or natural gas storage or distribution systems. Such enclosures should be specified whenever explosive hazards may exist.

6.5.3.7 Lightning Arresters. Lightning arresters should always be used on both the ac input and dc output sides of rectifiers using silicon rectifying elements. Their use on units using selenium elements is recommended in areas where lightning strikes are frequent. The arresters on the output should have a firing voltage greater than the rectifier output voltages.

6.5.3.8 Selenium Versus Silicon Stacks. While some old installations used copper oxide rectifying elements, modern units use either silicon or selenium rectifying elements. In general, silicon units are used for larger units where their higher efficiency is more important than their lower reliability.

Ordinary selenium stacks deteriorate with time. This "aging" can be reduced by variations in plate composition and "non-aging" stacks are available. Aging rates are determined by operating temperatures that are a function of current flow. The selection of a unit using selenium rectifying elements which has a somewhat greater capacity than required will increase stack life. The efficiency of selenium rectifying elements is a function of operating voltage versus rated voltage as shown in Figure 41.

Silicon diodes are mounted in metal cases which are mounted on either aluminum or copper plates to dissipate the heat generated during operation. Silicon diodes do not age as do selenium stacks and, as shown in Figure 42, are more efficient than selenium elements, particularly at higher voltage ratings. Silicon rectifying elements are more subject to complete failure from voltage surges which would only cause increased aging of selenium stacks. Surge protection should always be used on both the ac input and dc output of rectifiers using silicon diode rectifying elements.

6.5.3.9 Other Options. Other features listed in para. 6.5.3.1 are available and should be selected as appropriate. In remote off-base areas, small arms proof enclosures may be required based upon local experience. Specifying clear anodized aluminum enclosure top coated with one clear coat of polyurethane will reduce maintenance painting.

6.5.3.10 Rectifier Alternating Current Rating. The ac current requirement for a rectifier can be determined based upon rectifier output and efficiency by the following formulae:

a) Single-Phase Rectifiers

EQUATION: $$Iac = (Edc \times Idc)/F \times Eac \qquad (17)$$

where

Iac = alternating current requirement (A)
Edc = direct current output voltage
Idc = direct current output amperage
F = rectifier efficiency (%)
Eac = alternating current voltage (per phase)

b) Three-Phase Rectifiers

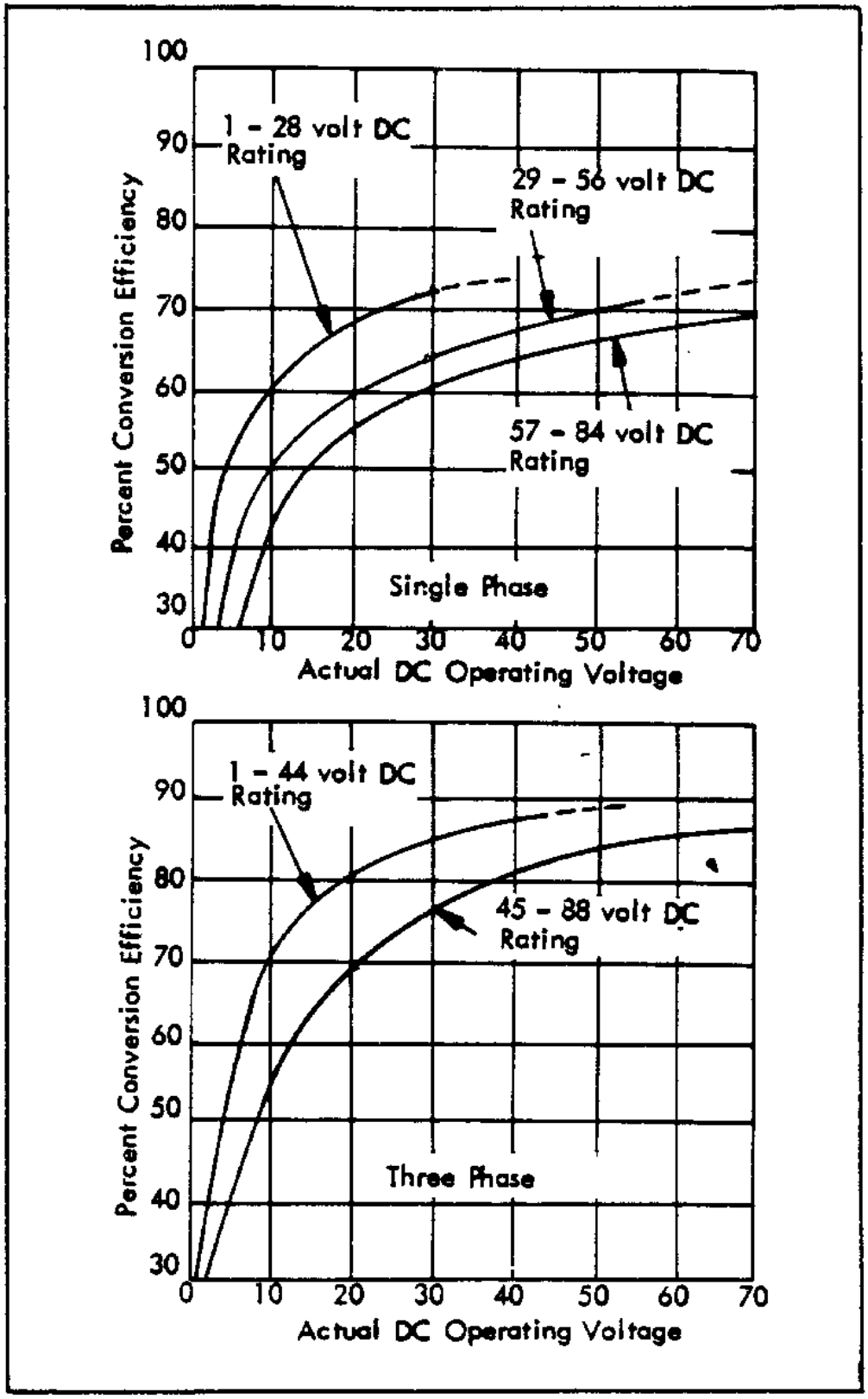

Figure 41
Efficiency Versus Voltage - Selenium Stacks

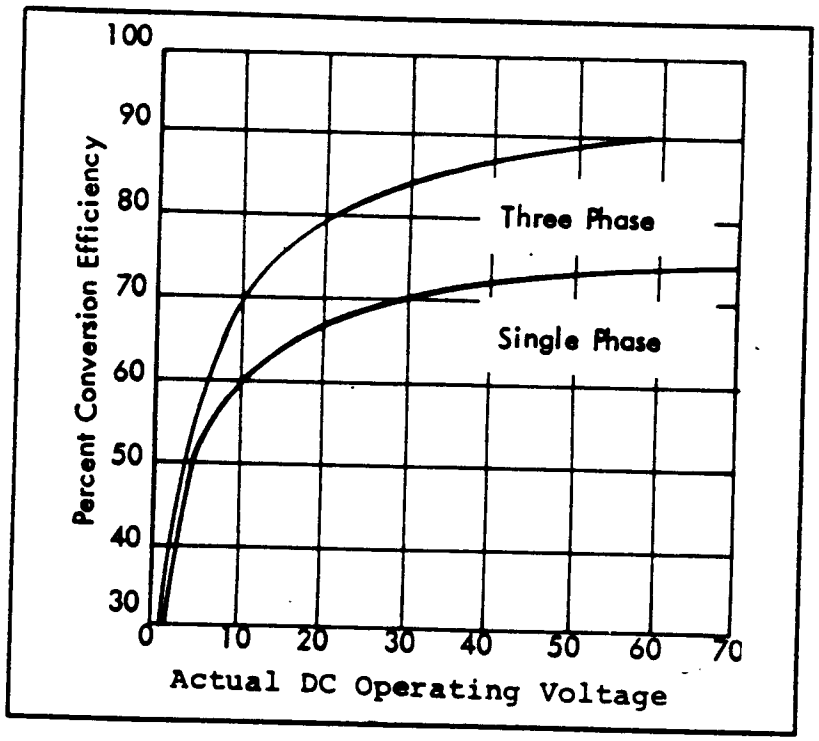

Figure 42
Efficiency Versus Voltage - Silicon Stacks

EQUATION: $$Iac = (Edc \times Idc)/(\sqrt{3} \times F \times Eac) \quad (18)$$

where

Iac = alternating current requirement (A)
Edc = direct current output voltage
Idc = direct current output amperage
F = rectifier efficiency (%)
Eac = alternating current voltage (per phase to phase)

6.6 Anodes for Impressed Current Systems. Although any electrically conductive material can serve as an anode in an impressed current system, anode materials that have a low rate of deterioration when passing current to the environment are mechanically durable. These anode materials are available in a form and size suitable for application in impressed current cathodic protection systems at a low cost. While abandoned "in-place" steel such as pipelines and rails can, and are, used as anodes, they are consumed at a rate of approximately 20 lbs/A yr. The most commonly used purchased materials for impressed current anodes are graphite, high silicon cast iron, high silicon chromium bearing cast iron, aluminum, platinized titanium, platinized tantalum, platinized niobium, and silverized lead. Newly developed anode materials such as oxide coated ceramics show considerable promise and should be evaluated based upon experience in similar applications, particularly if the more commonly used anode materials have proven unsatisfactory in a specific application.

6.6.1 Graphite Anodes. Graphite anodes are the most commonly used material for impressed current anodes in underground applications. They are made by fusing coke or carbon at high temperatures and are sealed from moisture penetration by being impregnated with a synthetic resin, wax, or linseed oil to reduce porosity and increase oxidation resistance. An insulated copper cable is attached to the anode internally for electrical connection to the rectifier. This connection must be well sealed to prevent moisture penetration into the connection and must be strong to withstand handling. The most important single improvement in high silicon cast iron and graphite anodes is placing the lead wire connection in the center of the anode instead of the end. This eliminates end-effect, where ends of the anode are consumed 1-1/2 times faster than the center. Although more expensive, the anode life is nearly doubled (tubular anodes will be 95 percent consumed, whereas end connected anodes will be only 50 percent consumed before the anode-to-lead wire connection is lost). This also allows for a more effective seal of the lead wire connection. Nearly all anode sizes are available in tubular form where the lead wire connection is located in the center. Typical anodes, connections, and seals are shown in Figures 43 and 44.

6.6.1.1 Specifications. The following are typical specifications for commercially available graphite anodes.

Composition	
Impregnant (Linseed Oil Synthetic Resin or Wax)	6.5 wt % max
Ash	1.5 wt % max
Moisture & Volatile Matter	0.5 wt % max
Water Soluble Matter	1.0 wt % max
Graphite	Remainder
Physical Properties	
Density	99.84 lb/cu ft max
Resistivity	0.0011 ohm-cm max
Mechanical Requirements	
Lead wire connection strength	525 lb minimum

6.6.1.2 Available Sizes. Graphite anodes are commercially available in two sizes:

Weight (lb)	Diameter (in.)	Length (in.)	Surface area (ft²)
27	3	60	4.0
68	4	80	7.1

The weights given are for the graphite only and do not include the weight of the lead wire or connection.

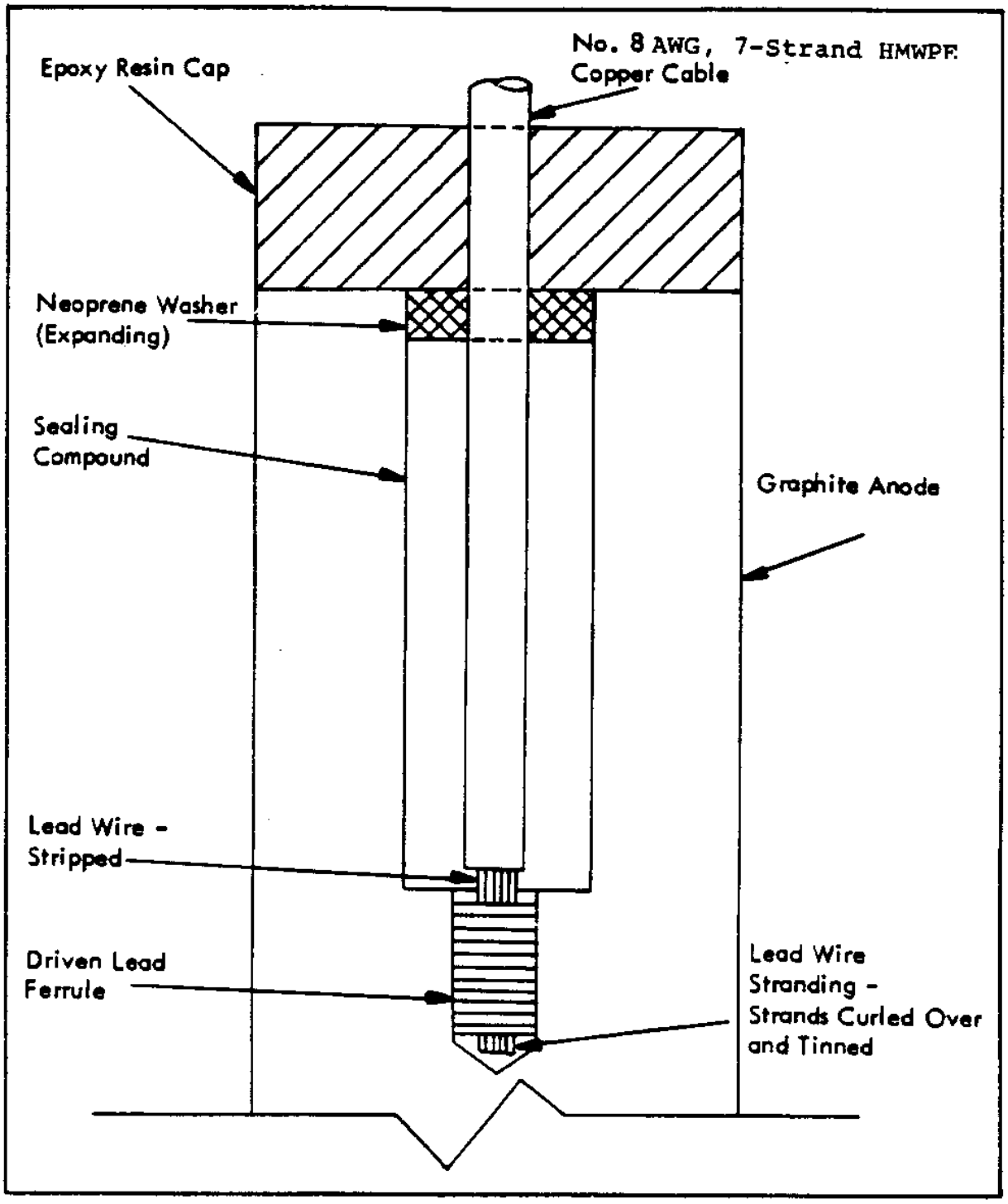

Figure 43
Anode-to-Cable Connection - Graphite Anode

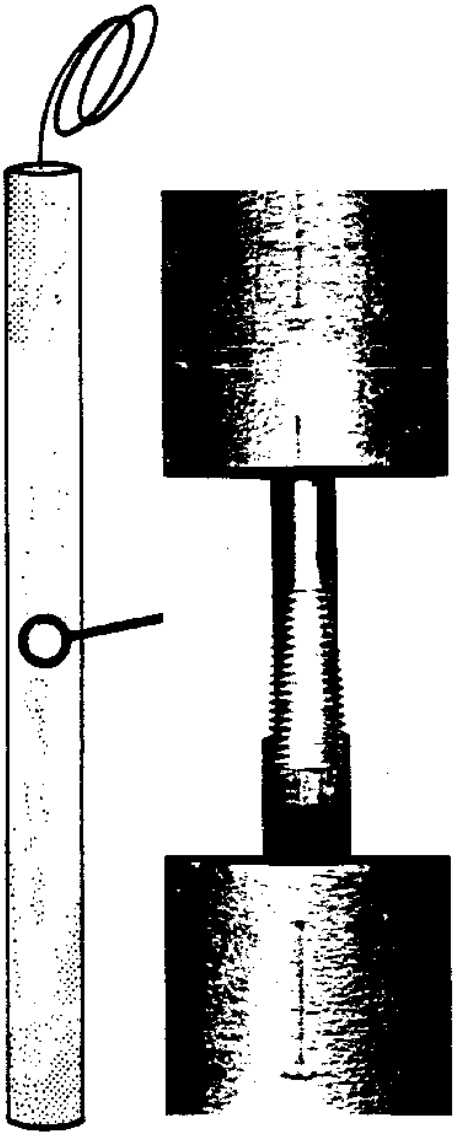

■ CENTER-CONNECTING
Eliminates premature failure due to "end effect" consumption.
Makes the anode-cable connection where moisture penetration is least likely.

■ SELF-TAPPING
Provides the lowest possible resistance contact with the anode material (10 times better than previous leaded connections).
Since torque is measured in the fabrication process, each anode meets stringent quality control parameters.

■ SUPER-SEALING WITH PROPRIETARY ADHESIVE
Resists moisture penetration.
Provides adhesion to both the graphite and HMW/PE wire insulation (yes, it even adheres to high molecular weight polyethylene).
Stands up to extremely reactive substances, including nacent chlorine.

■ WHAT IS "END EFFECT" CONSUMPTION?
Ionic current discharge is approximately 1½ times greater at both ends than at the central barrel portion of an anode. Thus the anode is consumed much more rapidly at the ends than at the center. Placing the lead wire connection at the center of the anode significantly increases the life of the anode since more than 95% of the graphite is usually consumed before the connection becomes exposed. Hence, CENTAP® anodes overcome the problem of premature failure due to "end effect" consumption.

Figure 44
Center Connected Graphite Anode

6.6.1.3 Characteristics. All products from the operation or deterioration of graphite anodes are gasses. In fresh water or non-saline soil, the principal gasses produced are carbon dioxide and oxygen. In saline soils or in seawater, chlorine is also produced and is the major gas produced in seawater applications.

The gasses generated, if allowed to collect around the anode, can displace moisture around the anode which results in a local increase is soil resistivity and an increase in circuit resistance.

6.6.1.4 Operation. Graphite anodes must be installed and operated properly in order to insure optimum performance and life.

a) Current Densities. The current densities in the following table should not be exceeded in order to obtain optimum anode life:

RECOMMENDED MAXIMUM CURRENT DENSITY FOR GRAPHITE ANODES

	SEAWATER	FRESH WATER	SOIL
Maximum Current Density (A/ft^2)	3.75	0.25	1.0
Equivalent Current on 3" x 60" Anode	15 A	1 A	4 A
Equivalent Current on 4" x 80" Anode	36.6 A	1.7 A	7.1 A

b) Operating Potentials. Since the potential difference between steel and graphite is approximately 1.0 V with the graphite being the cathode, this potential difference must be overcome before protective current will begin to flow in the impressed current cathodic protection system circuit. This 1.0 V must be added to the other voltage and IR drop requirements during the selection of proper power supply driving voltage.

c) Consumption Rates. Assuming uniform consumption, the rate of deterioration of graphite anodes in soil and fresh water at current densities not exceeding the values in the table above will be approximately 2.5 lbs/A yr. The deterioration rate for graphite anodes in seawater ranges from 1.6 lbs/A yr at current densities below 1 A/ft^2 to 2.5 lbs/A yr at current densities of 3.75 A/ft^2.

d) Need for Backfill. The deterioration of any point on a graphite anode is proportional to the current density at that point. If the resistivity of the environment at any one point is lower than the resistivity at other points, the current density and attendant deterioration will be higher there. This can result in uneven consumption and premature failure of graphite anodes, particularly if the low resistivity area is near the top of the anode. In this case, "necking" of the anode at the top occurs and the connection to the lower portion of the anode is severed. The use of backfill of uniform resistivity is used when graphite anodes are used in soil in order to prevent uneven anode deterioration.

6.6.2 High Silicon Cast Iron. Cast iron containing 14 to 15 percent silicon and 3/4 to 1 percent other alloying elements such as manganese and carbon, form a protective film of silicon dioxide when current is passed from their surface into the environment. This film is stable in many environments, with the exception of chloride rich environments. The formation of this film reduces the deterioration rate of this alloy from approximately 20 lbs/A yr, as for ordinary steel, to 1 lb/A yr. Due to the lack of resistance of this alloy to deterioration in environments containing chloride, a chromium bearing

alloy of similar silicon and other alloy content has been developed. The chromium bearing alloy is now almost exclusively used.

6.6.3 High Silicon Chromium Bearing Cast Iron (HSCBCI). This material is widely used for impressed current anodes. Being a metal it has much greater mechanical strength than nonmetals such as graphite magnetite. However, due to its low elongation under load it is brittle and should be protected from both mechanical and thermal shock.

6.6.3.1 Specifications. The nominal composition of HSCBCI is as follows: (conforms to ASTM Specification A518-GR.2)

ELEMENT	PERCENT
Silicon	14.50
Chromium	4.50
Carbon	0.95
Manganese	0.75
Iron	Remainder

The typical mechanical and physical properties of HSCBCI are as follows:

Tensile strength	15,000 psi
Compressive strength	100,000 psi
Hardness	520 Brinell
Specific gravity	7.0
Melting point	2,300 °F
Specific resistance	72 μohms/cu cm
Coefficient of expansion	7.33 μin./in./°F

The maximum acceptable resistance between the cable and the anode should be 0.01 ohms.

6.6.3.2 Available Sizes. HSCBCI anodes are available in a wide variety of standard sizes and shapes as shown in Tables 8 and 9. Special configurations can be produced at extra cost and are usually practical when standard anodes have been shown to be unsatisfactory for a particular application and where a large number of special configuration anodes are required. Typical HSCBCI anode configurations are shown in Figures 45 through 49. The cable-to-anode connection is, as in the case of all impressed current anodes, critical. Three common methods of achieving the cable-to-anode connection and seal are shown in Figures 50, 51, and 52. The use of the center connected tubular anode as shown in Figure 53 is preferable as necking of the anode at the connection point is avoided and life of the anode is extended 90 percent (50 percent anode material expended before failure versus 95 percent anode material expended before failure for center connected anode).

6.6.3.3 Operation. HSCBCI anodes are consumed at a rate of 1 lb/A yr when used at a current not exceeding their nominal discharge rates. The potential difference between steel and HSCBCI can be neglected in the selection of impressed current rectifiers. HSCBCI anodes will operate without backfill in most applications, but backfill will reduce the anode-to-electrolyte resistance and extend the life of the anodes. Because metal-to-metal contact is made between the anode and the round particle calcined petroleum coke breeze, the outside of the coke breeze becomes the anode. Also, the lower output voltage required will save power and reduce the initial cost of the rectifier unit. Because of these reasons, petroleum coke backfill is recommended where it can be feasibly installed.

6.6.4 Aluminum. Aluminum anodes are sometimes used for the protection of the interior of water storage tanks. They are consumed at a fairly high rate of approximately 9 lbs/A yr in most applications. The main advantages of using aluminum anodes in the protection of water storage tanks is their low cost, light weight, and lack of water contamination from the products of deterioration of the anodes. They are commonly used when seasonal icing of the tank would damage the anodes. The aluminum anodes are sized to last 1 year and are replaced each spring. HSCBCI and graphite anodes are more commonly used in water tanks and, when installed on a floating raft, can be made resistant to icing conditions.

6.6.5 Platinum. Pure platinum wire is sometimes used for impressed current cathodic protection anodes where space is limited. Platinum is essentially immune to deterioration in most applications. In seawater its consumption rate at current densities as high as 500 A/ft^2 is 0.00001 lb/A yr. Due to the high cost of platinum, this material is more commonly used as a thin coating on other metals as described in para. 6.6.6.

6.6.6 Platinized Anodes. Platinum can be bonded or deposited on other materials for use as an impressed current cathodic protection anode. The substrate materials, namely titanium, tantalum, and niobium have the special characteristic of being covered with a naturally formed stable oxide film which prevents current flow from their surfaces, even when exposed to high anodic potentials. All of the current flows from the platinum coated portion of the anode surface. These "platinized" anodes, although high in initial unit cost, can be used at very high current densities and have had wide

Table 8
Standard HSCBCI Anodes

ANODE TYPE	NOMINAL SIZE in (MM)	WEIGHT lb (kg)	AREA SQ FT M2	NOMINAL DISCHARGE-Amps	SPECIAL FEATURES
B	1 x 60 (25 x 1,524)	12 (5.4)	1.4 (.13)	0.5	Each end enlarged to 1-1/2 in. (38mm) dia with cored opening for joining.
TAB	2-3/16 x 24 (56 x 609)	13 (5.9)	1.1 (.10)	0.5-1.0	Lightweight flexible assembly with continuous cable.
TABB	2-21/23 x 24 (67 x 609)	18 (8.2)	1.4 (.13)	0.5-1.0	Lightweight flexible assembly with continuous cable.
CD	1-1/2 x 60 (38 x 1,524)	25 (11.4)	2.0 (.19)	1.0	One end only enlarged to 2 in. (51mm) dia with cored opening for cable connection.
TACD	2-3/16 x 60 (56 x 1,524)	32 (14.5)	2.8 (.26)	2.5-3.0	Center connection in series on center cable of or one lead only.
TA2A	2-3/16 x 42 (56 x 1,067)	23 (10.4)	2.0 (.19)	1.5-2.0	Center connection in series on continuous cable or one lead only.
TA1	2-21/32 x 42 (67 x 1,067)	31 (14.1)	2.4 (.22)	1.5-2.0	Center connection in series on continuous cable or one lead only.
TAJA	4-3/4 x 24 (121 x 609)	31 (14.1)	2.5 (.23)	1.5-2.0	Center connection in series on continuous cable or one lead only.
D	2 x 60 (51 x 1,525)	44 (20.0)	2.5 (.24)	1.5	Uniform 2 in. (51mm) dia with cable connection on one end only.
TAD	2-21/32 x 60 (67 x 1,524)	45 (20.4)	3.5 (.32)	2.3-3.5	Center connection in series on continuous cable or one lead only.
TA2	2-3/16 x 84 (56 x 2,133)	46 (20.9)	4.0 (.37)	3.0-4.0	Center connection in series on continuous cable or one lead only.
M	2 x 60 (51 x 1,524)	60 (27.2)	2.8 (.26)	2.0-2.5	Each end enlarged to 3 in (76mm) dia with cord opening for joining.
TAM	3-3/4 x 60 (95 x 1,524)	60 (27.2)	4.9 (.46)	3.5-5.0	Center connection in series on continuous cable or one lead only.

Table 8 (continued)
Standard HSCBCI Anodes

ANODE TYPE	NOMINAL SIZE in (MM)	WEIGHT lb (kg)	AREA SQ FT M2	NOMINAL DISCHARGE-Amps	SPECIAL FEATURES
TA3	2-21/32 x 84 (67 x 2,133)	63 (28.6)	4.9 (.46)	3.5-5.0	Center connection in series on continuous cable or one lead only.
J	3 x 36 (76 x 914)	80 (36.3)	2.5 (.23)	2.5-3.0	One end only enlarged to 5 in (127mm) dia w/cored opening for cable connection.
TAJ	4-3/4 x 60 (121 x 1,524)	78 (35.4)	6.2 (.58)	5.0-6.0	Center connection and tubular design gives greater surface area.
TA4	3-3/4 x 84 (95 x 2,133)	85 (38.6)	6.9 (.64)	6.0-7.0	Center connection and tubular design gives greater surface area.
E	3 x 60 (76 x 1,524)	110 (49.9)	4 (.37)	4-6	One end only enlarged to 4 in (102mm) dia with cored opening for cable connection.
TAE	4-3/4 x 60 (121 x 1,524)	125 (56.7)	6.2 (.58)	6-8	Center connection eliminates loss due to "end effect."
TA5	4-3/4 x 84 (121 x 2,133)	110 (49.9)	8.7 (.81)	6-8.5	Center connection eliminates loss due to "end effect."
SM	4-1/2 x 60 (114 x 1,524)	220 (99.9)	5.5 (.51)	5-8	Uniform 4-1/2 in (114mm) dia with cored opening each end. Permits 2 cable connections, if required.
TA5A	4-3/4 x 84 (121 x 2,133)	175 (79.4)	8.7 (.81)	9-10	Center connection and tubular design gives longer life.
FW	1-1/8 x 9 (29 x 229)	1 (.5)	0.22 (.02)	0.025	Lightweight flexible assembly with continuous cable.
TAFW	2-3/16 x 8 (56 x 203)	4.3 (1.9)	0.38 (.04)	0.40	Lightweight flexible assembly with continuous cable.
G2	2 x 9 (51 x 229)	5 (2.3)	0.40 (.04)	0.10	Inside configuration permits single center cable-to-anode connection or continuous cable.
TAG	2-21/32 x 8 (67 x 203)	6 (2.7)	0.47 (.05)	0.55	Center connection in series on continuous cable or one lead only.
TAFWA	2-3/16 x 12 (56 x 304)	6.5 (2.9)	0.57 (.06)	0.60	Center connection in series on continuous cable or one lead only.

Table 9
Special HSCBCI Anodes

TYPE	NOMINAL SIZE (inches)	WEIGHT EACH (lb)	AREA sq ft	APPLICATION	SPECIAL
K-3	3 x 3	6	0.25	Small heat exchangers and like structures with limited mount-ing area.	"Button" with int cast bol taching ture usi able gas
K-6	6 x 2-1/2	16	0.5	Ship hull, lock gate, heat exchangers, or any other structure with large flat surface.	"Button" with int cast bol taching ture usi able gas
K-12	12 x 3-7/16	53	1.0	Ship hull, lock gate, heat exchangers, or any other structure with large flat surface.	"Button" with int cast bol taching ture usi able gas
Bridge Deck I	12 dia x 1-1/2	40	1.96	Bridge decks	Lead-one only
Bridge Deck II	9 oval x 9/16	6	0.74	Bridge decks	Assemble tandem o uous 8/7 cable.

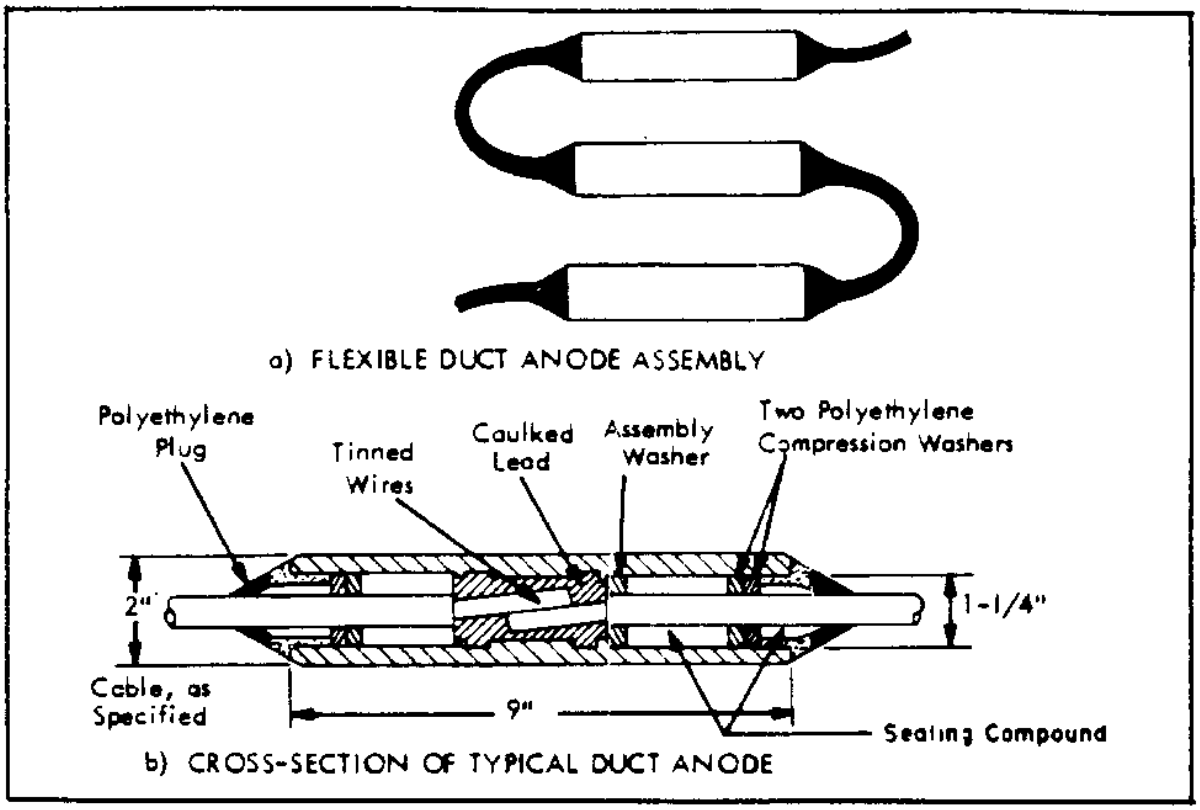

Figure 45
Duct Anode

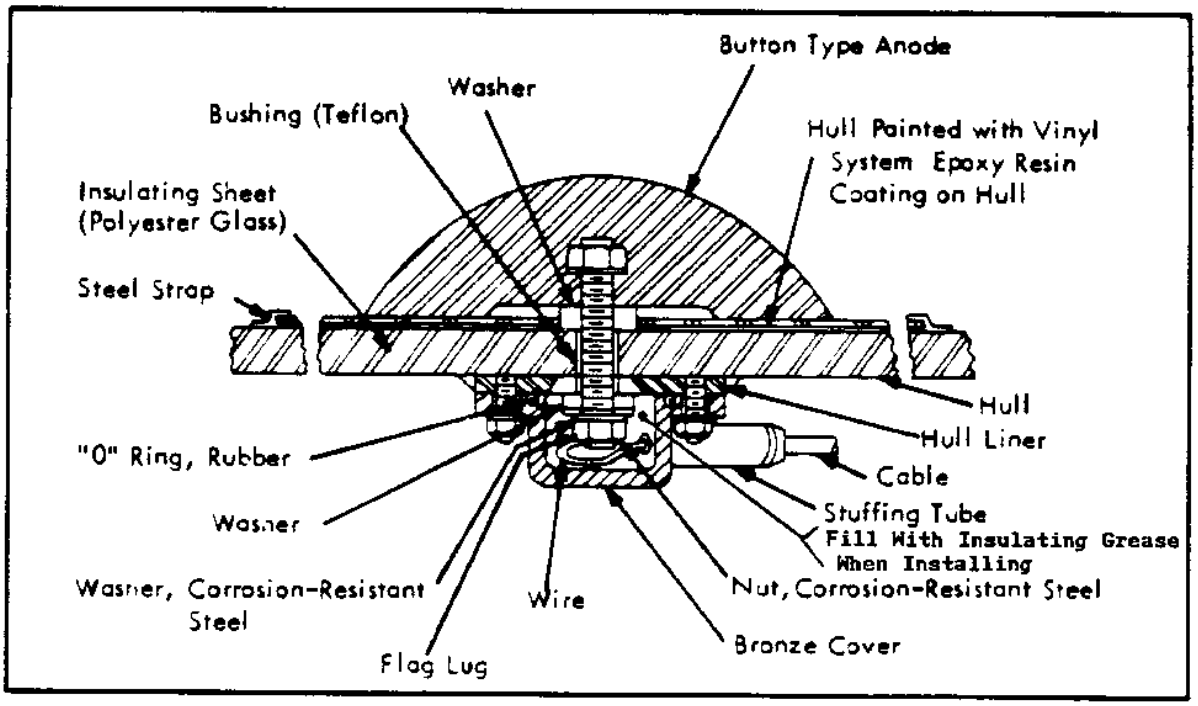

Figure 46
Button Anode

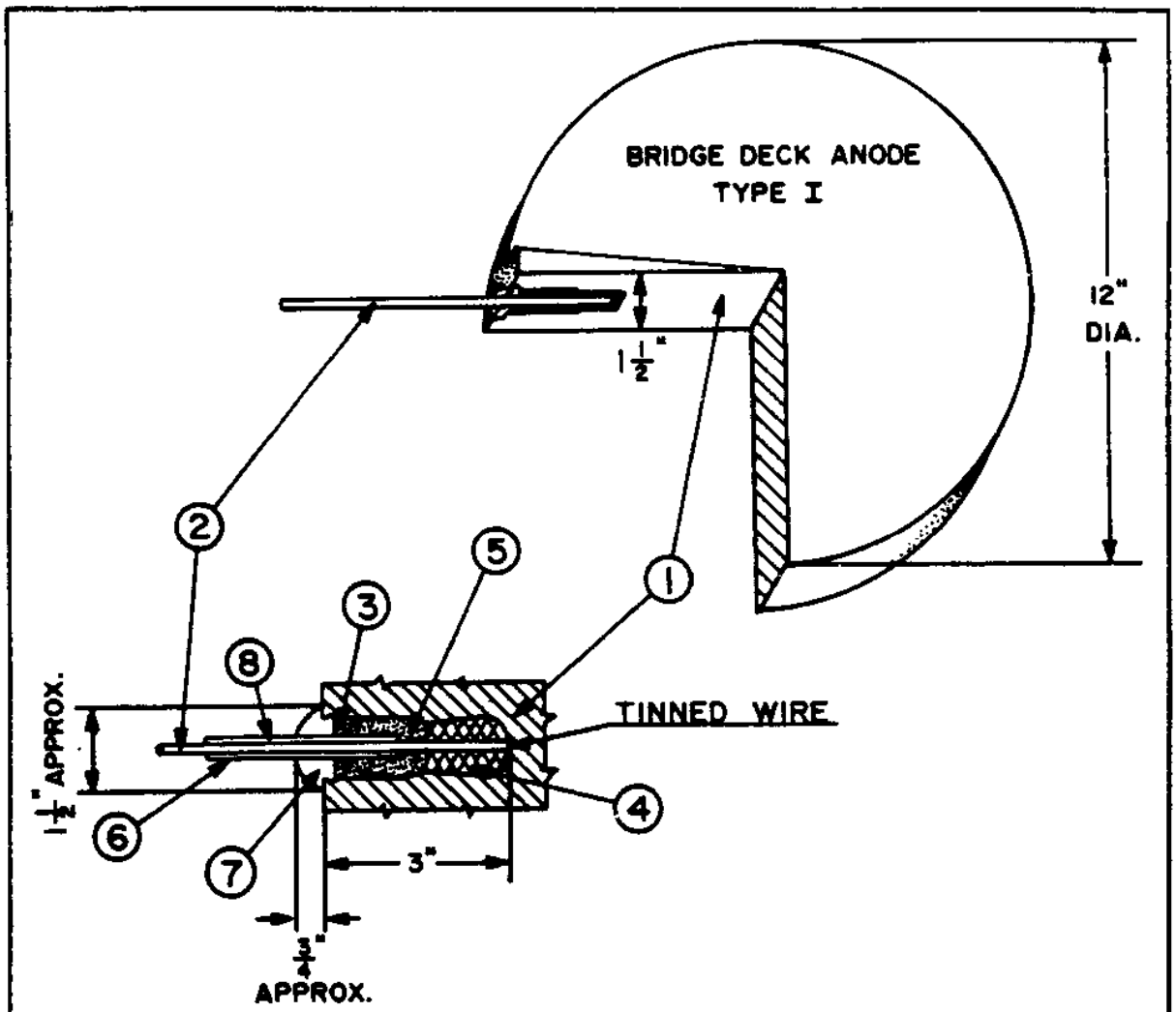

ITEM	DESCRIPTION
1	Anode - Wt 40 Lbs
2	Cable 8/7 Str., HMPE
3	Washer
4	Lead
5	Mastic
6	Tubing
7	Epoxy Seal
8	Interface Sealant "F"

Figure 47
Bridge Deck Anode - Type I

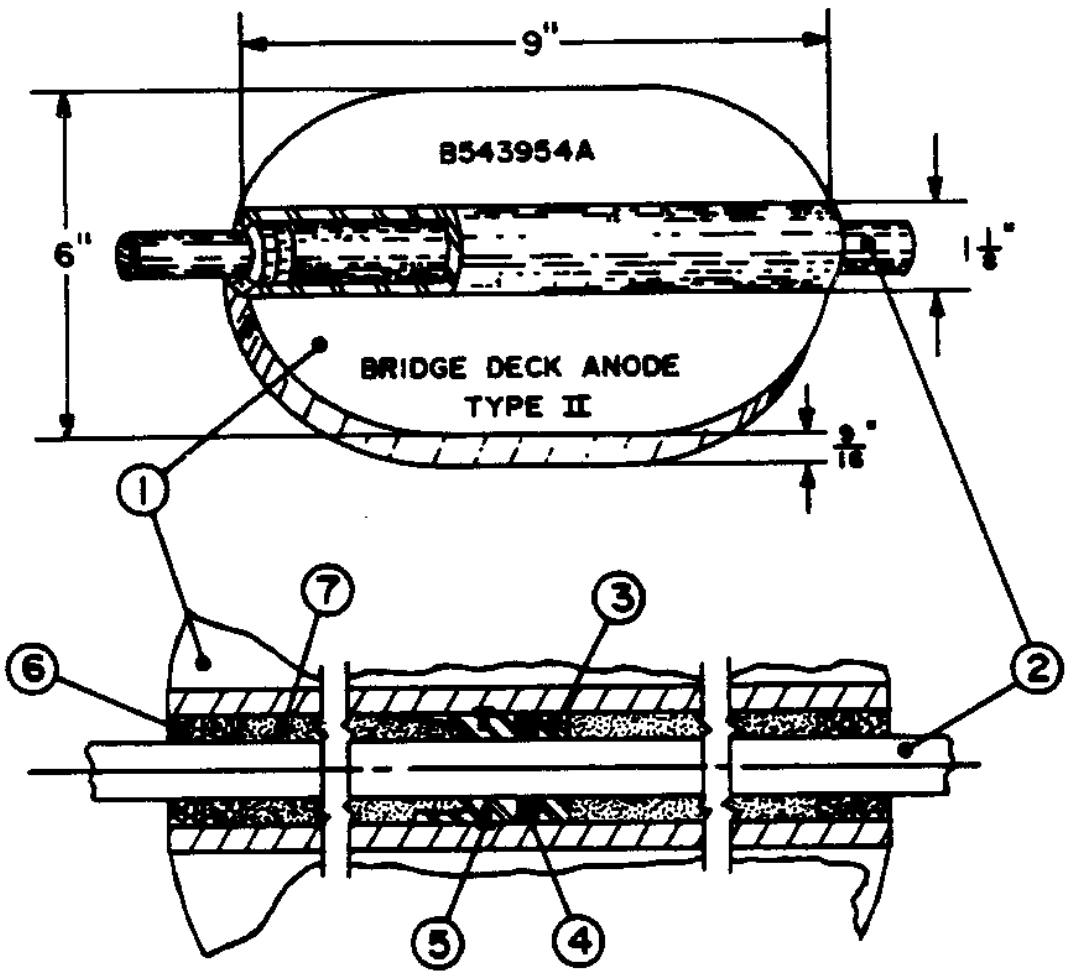

ITEM	DESCRIPTION
1	Anode Wt. 6 Lbs.
2	8/7 Str. Cable, HMPE
3	Connector
4	Connector Pin
5	Spring
6	Washer
7	Mastic

Figure 48
Bridge Deck Anode - Type II

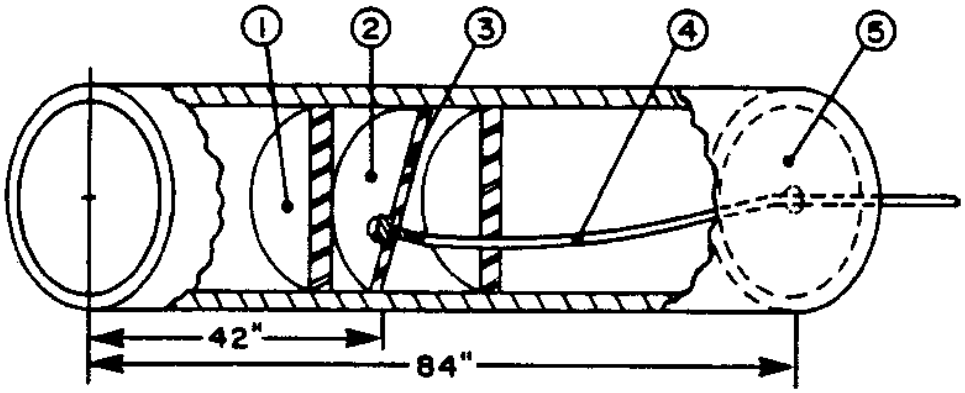

Item	Description
1	Epoxy Seal
2	Mastic
3	Plate
4	Cable
5	Guide

Figure 49
Tubular Anode

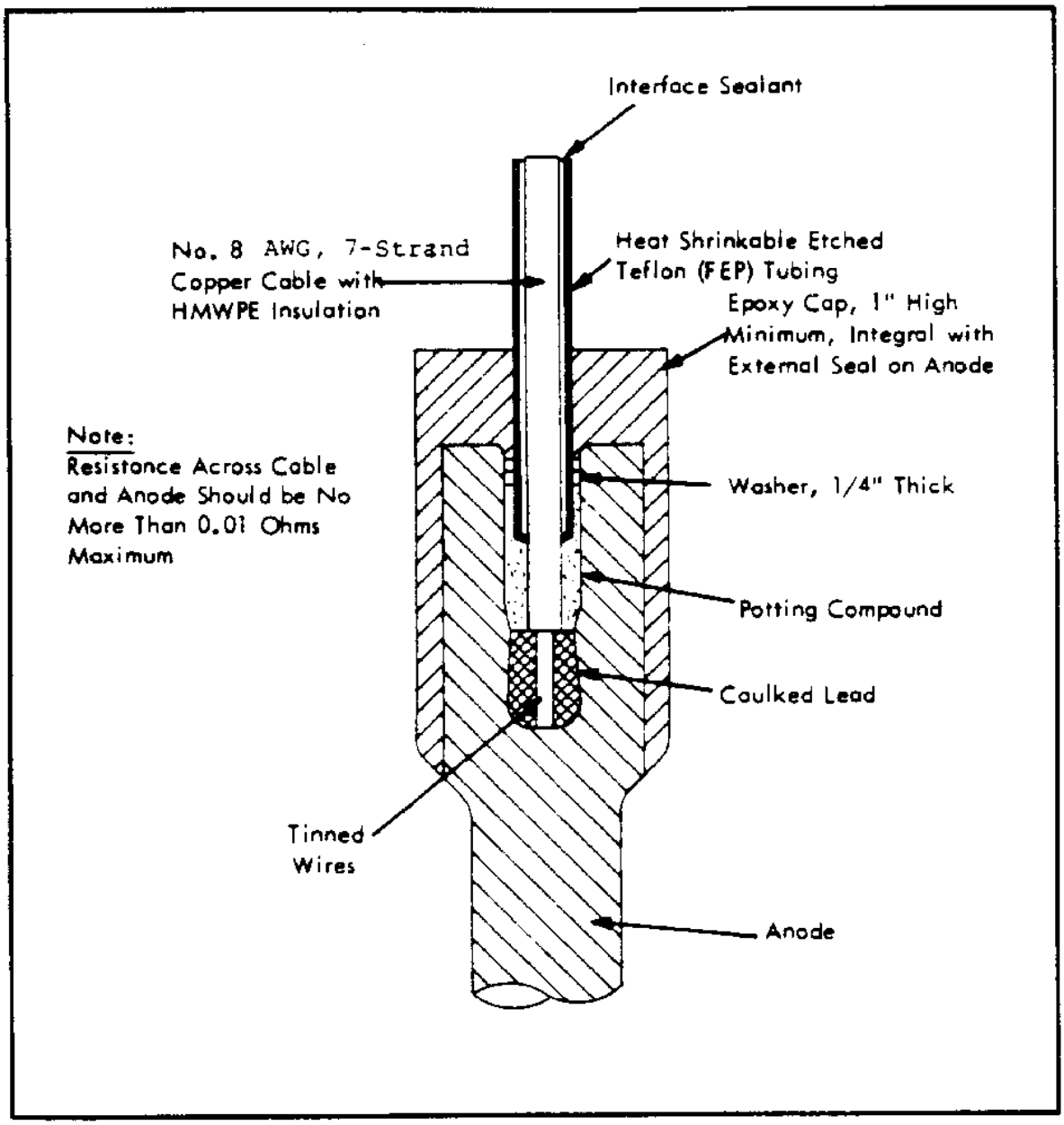

Figure 50
Anode to Cable Connection - Epoxy Seal

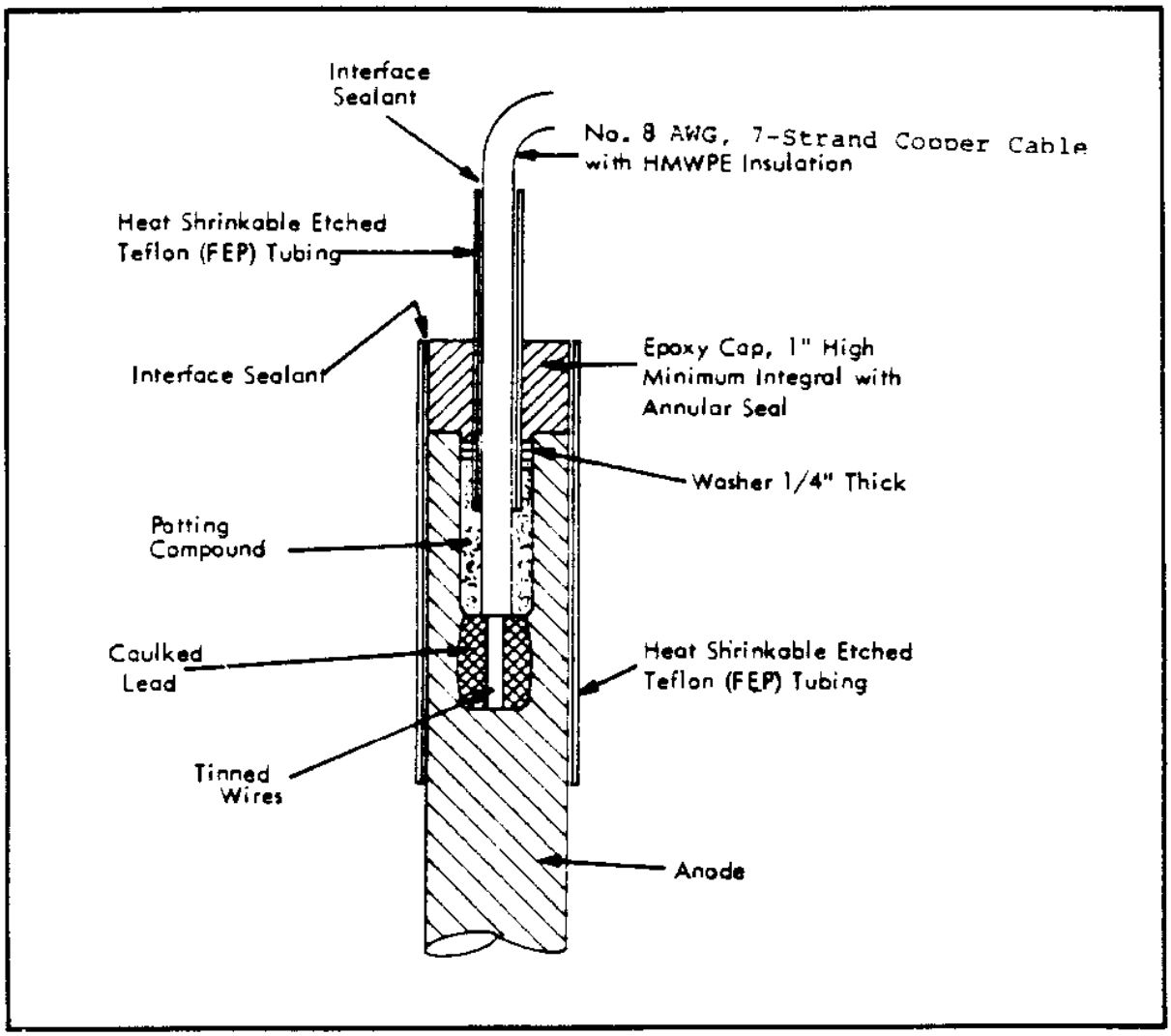

Figure 51
Anode to Cable Connection - Teflon Seal

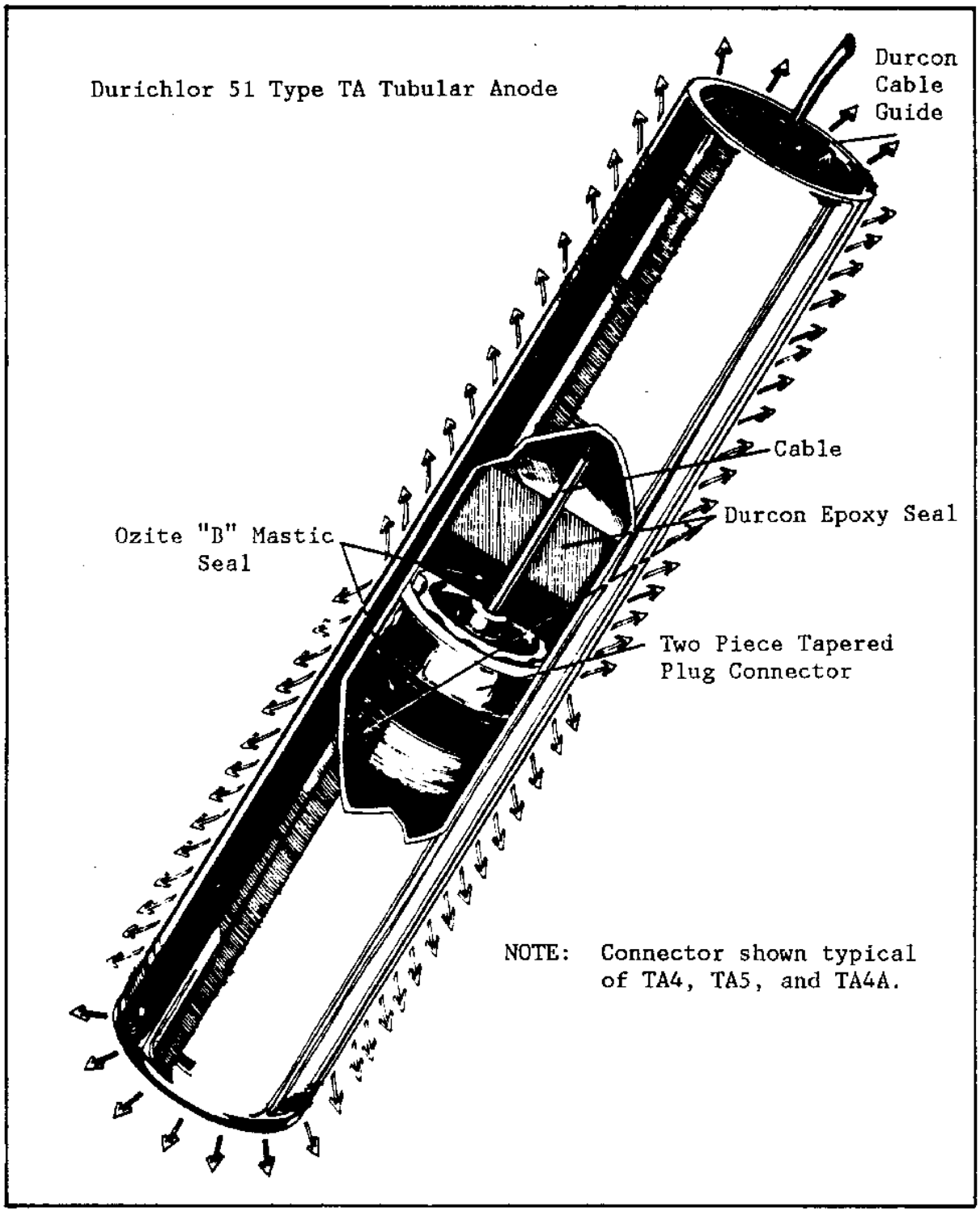

Figure 52
Center Connected High Silicon Chromium Bearing Cast Iron Anode

application to service in tanks and other liquid handling systems as well in seawater. Their use in soils has been limited occasionally to deep we applications.

6.6.6.1 Types. Platinized anodes are available in a wide variety of siz and shapes. Sizes of standard platinized titanium anodes are shown below

DIAMETER (in.)	LENGTH (in.)	EXTENDED LENGTH (in.)	PLATINIZED LENGTH (in.)
3/4	20	15	6
3/4	12	7	3
3/4	23	18	9
3/4	20	15	9
1/2	20	15	6
1/2	17	12	5
1/2	23	18	9

A typical anode configuration is shown in Figure 53. Typical platinum thicknesses of 100 &mgr;in. are used.

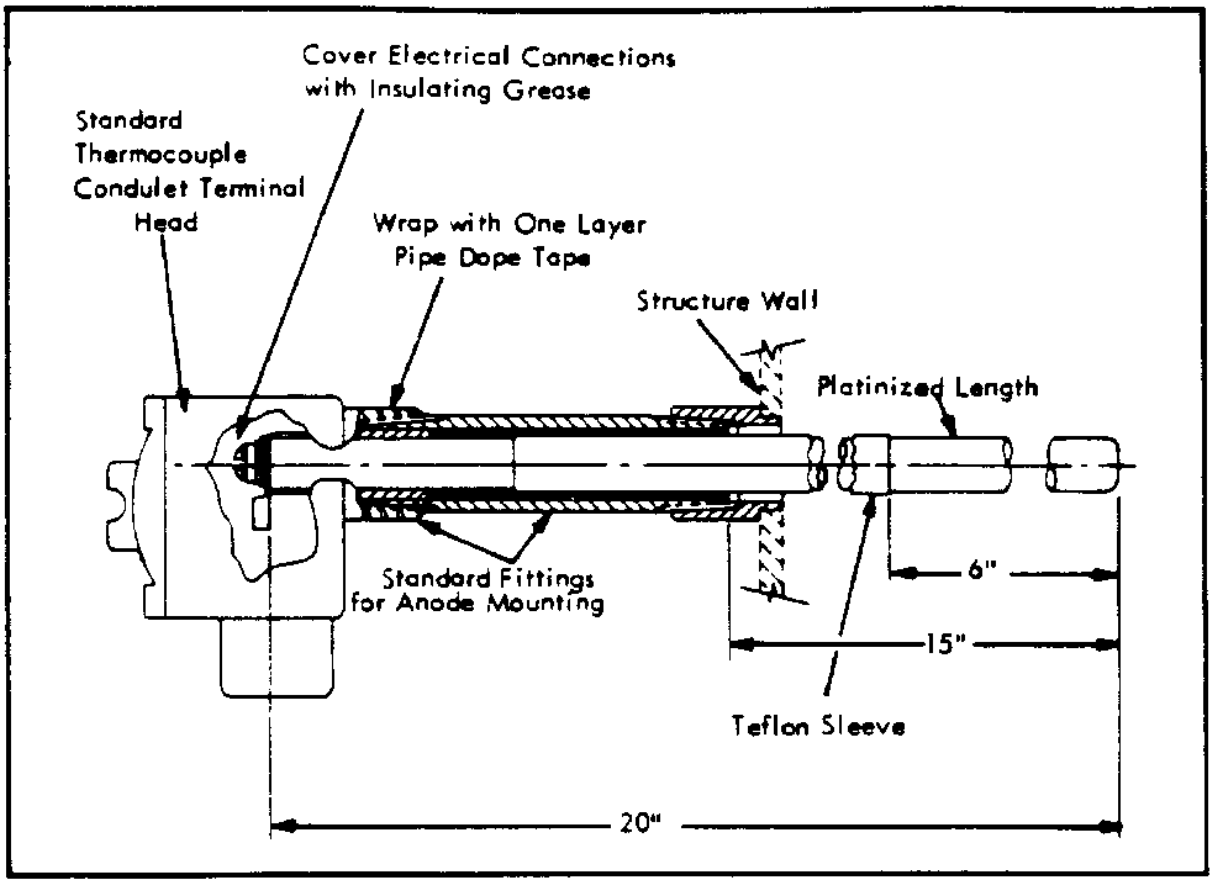

Figure 53
Typical Platinized Anode

6.6.6.2 Operation. Platinized anodes can be operated at very high current densities (100 A/ft² are typical). The primary limitation of platinized anodes is that the oxide film on the substrate can break down if excessive anode-to-electrolyte voltages are encountered. The practical limit for platinized titanium is 12 V. Platinized niobium can be used at potentials as high as 100 V. Since these anodes are small in size, their resistance-to-electrolyte is high and therefore, higher voltages are required to obtain high current.

6.6.7 Alloyed Lead. Lead alloyed with silver, antimony, or tin have been used as anodes for impressed current cathodic protection systems in seawater. The chief advantage of lead anodes is their low cost. The consumption rate for silverized lead is 2- to 3-lbs/A yr initially but drops off to approximately 0.2 lbs/A yr after 2 years. The current density from silverized lead anodes is typically 10 A/ft². Alloyed lead anodes have been unreliable in many specific applications either because they failed to passivate and their consumption rate remained in the 2-to 3-lbs/A yr range and they were completely consumed, or they became so highly passivated that the anode-to-electrolyte resistance increased substantially.

6.7 Other System Components. In addition to the source of power for cathodic protection and the anodes used, cathodic protection systems contain other important components. The entire system must be reliable in order to provide effective protection.

6.7.1 Connecting Cables. The connecting cables used between the various components of cathodic protection systems are vital to the proper performance of the system. Any break in the primary circuit will result in failure of the system and will require repair to restore the flow of protective current. Breaks in the auxiliary connections such as those used to test the system will also result in difficulties in proper adjustment and inspection of the system. Proper selection of cable size, type of insulation, and routing is necessary for proper and reliable system operation. Only insulated copper cables should be used in any cathodic protection installation. High connection resistances and difficulty in making welded connections associated with the use of aluminum wires precludes their use in cathodic protection installations.

6.7.1.1 Factors to be Considered. Connecting cables should be selected based upon consideration of the following factors:

a) Current carrying capacity

b) Voltage attenuation (IR Drop)

c) Mechanical strength

d) Economics (first cost versus power costs)

e) Dielectric strength of insulation

f) Durability (abrasion & cut resistance) of insulation

Standard wire sizes, weights, and breaking strengths are given in Table 10.

Table 10
Standard Wire Characteristics

SIZE AWG	OVERALL DIAMETER NOT INCLUDING INSULATION (in.)	APPROX. WEIGHT NOT INCLUDING INSULATION (lb/M ft)	MAXIMUM BREAKING STRENGTH (lb)	MAXIMUM DC RESISTANCE AT 20 °C (ohms/M ft)	MAXIMUM ALLOWABLE dc CURRENT CAPACITY (A)
14	0.0726	12.68	130	2.5800	15
12	0.0915	20.16	207	1.6200	20
10	0.1160	32.06	329	1.0200	30
8	0.1460	50.97	525	0.6400	45
6	0.1840	81.05	832	0.4030	65
4	0.2320	128.90	1320	0.2540	85
3	0.2600	162.50	1670	0.2010	100
2	0.2920	204.90	2110	0.1590	115
1	0.3320	258.40	2660	0.1260	130
1/0	0.3730	325.80	3350	0.1000	150
2/0	0.4190	410.90	4230	0.0795	175
3/0	0.4700	518.10	5320	0.0631	200
4/0	0.5280	653.30	6453	0.0500	230
250 MCM	0.5750	771.90	7930	0.0423	255

6.7.1.2 Insulation. The connections between the cathodic protection power source and the anodes are usually submerged or buried at least over part of their length. These cables are extremely susceptible to failure as they are operated at highly positive potentials. Any contact between the metallic conductors and the environment will result in rapid deterioration of the conductor and loss of continuity of the protective circuit. Anode lead wires should never be used to suspend, carry, or install the anode except in water storage tanks.

High molecular weight polyethylene (HMWPE) insulation has proven to give satisfactory service for the insulation of this critical connection in most shallow buried applications. Where exposure to chlorine is encountered, such as in seawater or in deep anode applications, chlorine resistant insulation such as fluorinated ethylene propylene (FEP), tetrafluorethylene (TFE), and polyvinylidene fluoride (PVF2) are used either singly or in combinations with thicknesses of up to 0.150 inches. These materials are also used over a primary insulation of extruded polyalkene, 0.30 inches thick, or are covered with a jacket of high molecular weight polyethylene for mechanical protection.

A highly successful insulation for such highly critical applications has been a system consisting of a 0.065-inch-thick high molecular weight polyethylene outer jacket for abrasion resistance combined with a 0.040-inch-thick ethylene-monochlorotrifluroethylene copolymer (E-CTFE). For less critical applications such as the negative lead to the rectifier, test wires and aboveground wiring, thermoplastic insulation (type TW), synthetic rubber (RHW-USE), or polyethylene may be used.

6.7.1.3 Recommended Cables for Specific Applications. Because of similarities in required characteristics of the various connecting cables in many impressed current cathodic protection systems, general specifications for cable sizes and types for many cathodic protection system requirements have been established and are given below:

a) Test Wires: These wires carry only very small currents and, as they are themselves cathodically protected, insulation requirements are not critical. Solid copper wires, No. 12 gauge AWG with type TW, RHW-USE or polyethylene insulation should be used for this application unless otherwise indicated by experience.

b) Bond Wires: These wires carry more current than test wires. No. 4 AWG, 7-strand copper cable with Type TW, RHW-USE or polyethylene insulation is recommended for all bonds unless a larger wire size is required for current carrying capacity.

c) Power Supply to Structure Cables: The power supply is HMWPE insulated 7-strand cable, usually in the size range of No. 2 or No. 4 AWG. The actual wire size should be determined by economic analysis as described in para. 6.7.1.4 but wire no smaller than No. 4 AWG should be used because of mechanical stength required.

d) Power Supply to Anode Cable: The insulation in these cables is critical. HMWPE insulation, 0.110 inches thick, as a minimum, is required on these cables. The anode connection wire is usually No. 8 AWG with HMWPE insulation. The wire used to interconnect the anodes and to connect the anode bed with the power supply is commonly in the range of No. 2 AWG or larger. The actual wire size should be selected based upon the economic analysis described in para. 6.7.1.4 but should not be smaller than No. 4 AWG because of strength.

6.7.1.4 Economic Wire Size. The size of the connection between the structure, anode bed, and power supply in impressed current cathodic protection systems should be selected to minimize overall cost. This can be determined by calculating the annual fixed cost of the selected wire and comparing it with the cost of power losses for the system. When the annual fixed cost and the cost associated with power losses are equal, their sum is minimum and the most economical selection of wire size is confirmed. If the power losses exceed the annual costs, a larger wire size is indicated; if the annual fixed costs exceed the power loss, then a selection of a smaller wire size would be appropriate. The formula for determining power loss costs is:

EQUATION: $$V = MK_m \quad (19)$$

where

$M = 0.0876\ I^2R$
$K_m = LP/E$

and

V = annual cost of power losses ($)
I = current flow (A)
R = resistance of 100 feet of cable
P = power cost (cents/kWh)
E = power source (rectifier) efficiency (%)
L = length of cable (feet)

Values for M for commonly used wire sizes and various currents from 10 to 100 A are given in Table 11.

The formula for determining the annual cost of fixed charges is:

EQUATION: $$F = E\ S\ L \quad (20)$$

where

F = annual fixed charges ($/yr)
E = estimated annual charges (see a) below)
S = initial cable cost ($/ft)
L = cable length (ft)

a) The estimated annual charges used will vary. They are the sum of depreciation, interest, taxes, insurance, operation, and maintenance. As shown below, a value of 0.11 is typical for government installations where taxes and insurance are not considered:

Depreciation	=	0.02
Interest	=	0.06
Taxes	=	0
Insurance	=	0
Operation & Maintenance	=	0.03
Total (E)	=	0.11

6.7.2 Wire Splices and Connections. Wire splices and connections are a source of undesirable circuit resistance and are a weak point in the reliability of the system since they often fail due to corrosion or mechanical damage. The number of connections should be kept to an absolute minimum and the type of connection used should have low resistance, high reliability, and good resistance to corrosion. As described in para. 10.6, both mechanical

Table 11
M Factors for Determining Economic Wire Size
(Cost of losses in 100 feet of copper cable at 1 cent per kW

CABLE SIZE	CURRENT (amps) 10	20	30	40	50	60	70	80
10	0.893	3.57	8.04					
8	0.561	2.25	5.05	9.00	14.00			
6	0.360	1.44	3.24	5.76	9.00	13.00	17.64	
4	0.226	0.905	2.03	3.62	5.65	8.14	11.08	14.46
2	0.1424	0.570	1.08	2.28	3.56	5.13	6.98	9.11
1	0.113	0.451	1.02	1.81	2.82	4.06	5.54	7.24
1/0	0.0893	0.357	0.804	1.425	2.23	3.21	4.47	5.71
2/0	0.0710	0.284	0.639	1.135	1.77	2.56	3.48	4.55
3/0	0.0562	0.257	0.506	0.900	1.40	2.03	2.76	3.60
4/0	0.0446	0.178	0.401	0.715	1.115	1.61	2.19	2.86
250 MCM	0.0378	0.151	0.340	0.605	0.945	1.36	1.85	2.42
300	0.0316	0.1265	0.284	0.506	0.790	1.14	1.55	2.02
350	0.0270	0.108	0.243	0.432	0.675	0.972	1.32	1.73
400	0.0237	0.0948	0.213	0.379	0.593	0.854	1.16	1.52
450	0.0210	0.0840	0.189	0.336	0.525	0.755	1.03	1.342
500	0.0189	0.0755	0.170	0.302	0.472	0.680	0.925	1.21
550	0.0172	0.0689	0.155	0.275	0.430	0.619	0.842	1.10
600	0.0158	0.0632	0.142	0.253	0.395	0.569	0.775	1.01
650	0.0145	0.0580	0.1305	0.232	0.362	0.522	0.710	0.928
700	0.0135	0.0540	0.1215	0.216	0.338	0.486	0.661	0.865
750	0.0126	0.0504	0.1132	0.202	0.315	0.454	0.616	0.805
1000	0.00945	0.0378	0.0970	0.151	0.236	0.340	0.463	0.605

connections and thermo-weld connections are used in the installation of cathodic protection systems. Mechanical connections are less expensive t thermo-weld connections but often have higher resistance and are more susceptible to corrosion and mechanical damage. All connections must be carefully insulated, particularly in the anode-to-power supply portion of the circuit where any loss of insulation integrity will result in rapid system failure. All connections in the power source to anode bed portion the circuit and all cable-to-cable connections should be insulated by encapsulation in epoxy using commercially available kits made expressly f this purpose. The cable-to-structure connection is less critical and eit epoxy encapsulation or insulation with hot coal-tar enamel followed by wrapping with pipeline felt may be used on this connection. The followin connections are required for impressed current systems:

a) Connection between power source and structure

b) Connection between anode bed(s) and power source (anode head cable)

c) Connection between anode header cable and each anode

d) Connection between cable and anode (usually factory made)

e) Necessary bonds and test wires

The need for additional connections and splices should be carefully evaluated. The location of all necessary splices and connections should be specifically shown on the design drawings. The need for additional splices and connections should be determined by the designer of the system and not be left to the discretion of the installer.

6.7.3 Test Stations. There are six basic types of test stations used in impressed current cathodic protection systems: the potential test station, the soil contact test station, the line current (IR Drop) test station, the insulating joint test station, the casing insulation test station, and the bond test station. The wiring for each of these test stations is shown in Figures 54 through 59. Test wires should be solid copper, No. 10 AWG, either TW or RHW-USE insulated. If future bonding across flanges or between structures may be required, 7-strand copper cables, No. 4 AWG or larger if required, should be connected to the structure(s) and brought into a test station for future use.

Test stations may either be located flush with the surface of pavement or soil as shown in Figure 54 or in an above grade test station as shown in Figure 57, manufactured specifically for this purpose. Flush-mounted test stations are preferred in paved areas or other areas where damage by vehicles, etc., is anticipated. Above grade test stations are preferable in unpaved areas. In addition to test stations, balancing resistors are sometimes required when multiple anode beds are used with a single rectifier. These resistors should be installed in an above grade terminal box as shown in Figure 60. The location and wiring of all test stations should be included in the system design. All test wires should be color coded, and marked with noncorroding metal or plastic identification tags indicating what they are connected to.

6.7.4 Bonds. Bonds between sections of the protected structure or between the protected structure and a foreign structure should use 7-strand copper cable, No. 4 AWG or larger insulated cable. All resistive bonds should be brought into a test station for adjustment. Direct bonds may also be brought into test stations if future adjustments or connections may be required. All bond-to-structure connections should be made using thermo-weld connections, insulated by epoxy encapsulation. Standard details for bonding are shown in Figures 61 through 68.

6.7.5 Insulating Joints. Insulating joints between sections of a structure are often installed in order to break (electrically) the structure into sections that can be protected by independent cathodic protection systems, or to separate sections that require cathodic protection from those that do not. These joints can either be directly buried, be located in valve pits, or be located above grade. If they are directly buried, they should be furnished with a test station as described in para. 6.7.3, and shown in Figures 69 through 72.

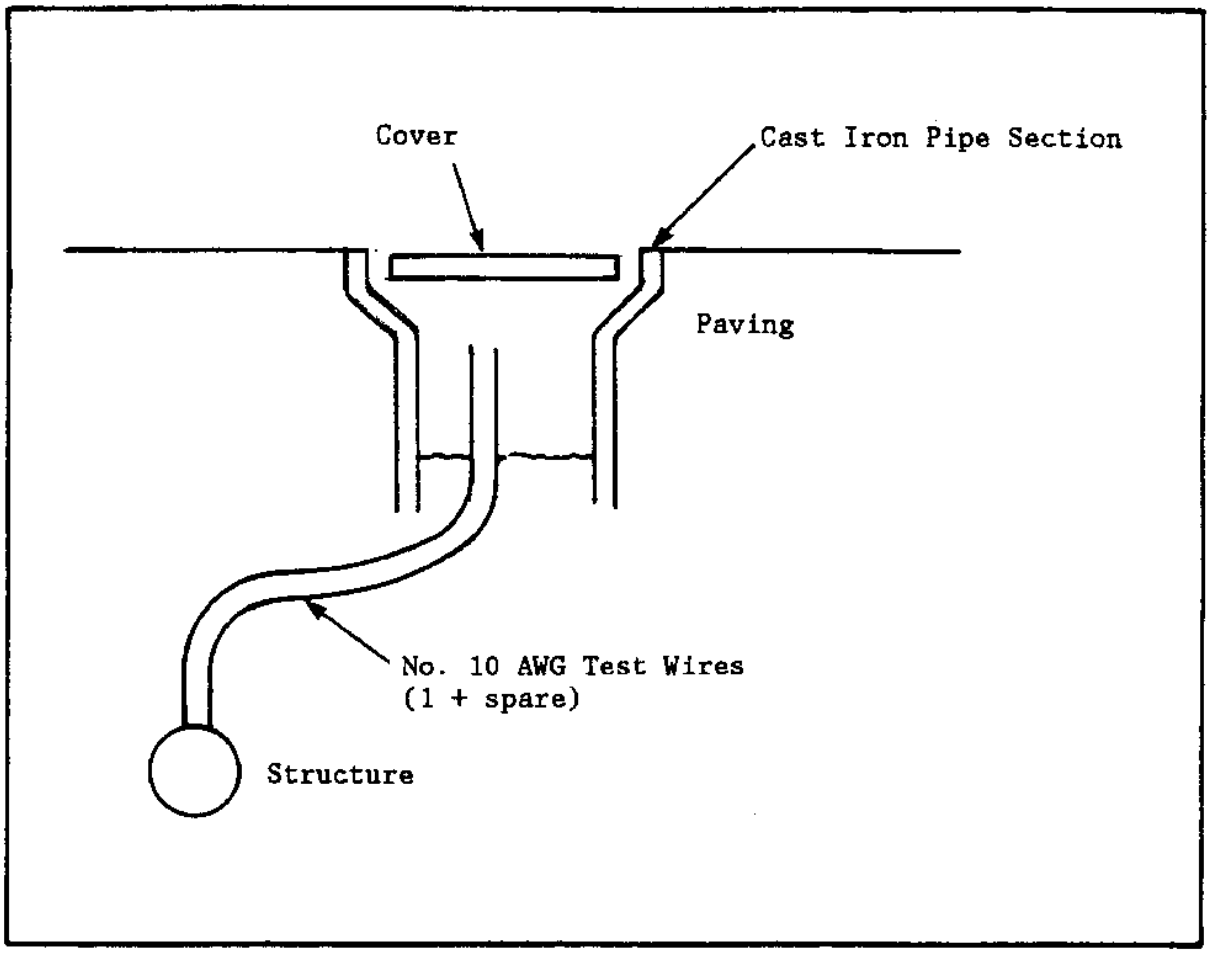

Figure 54
Flush-Mounted Potential Test Station

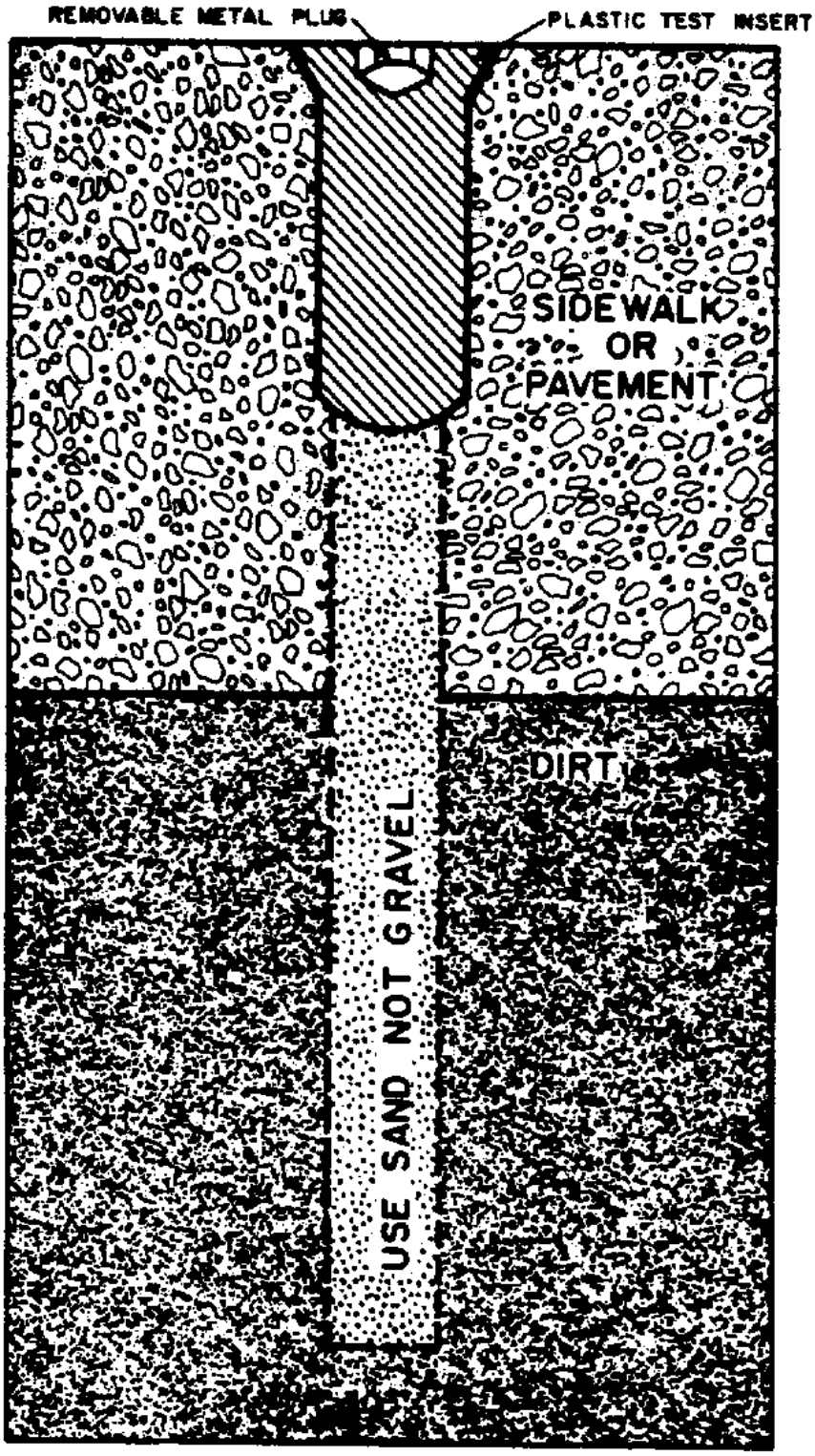

Figure 55
Soil Contact Test Station

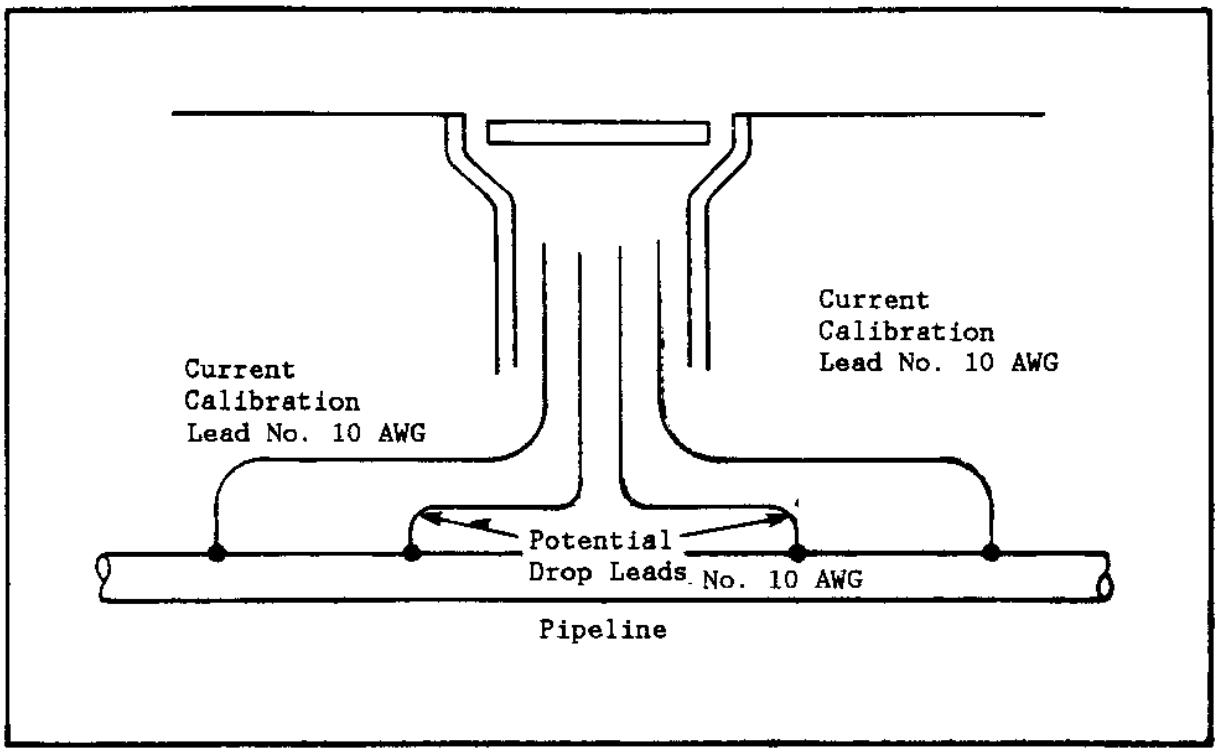

Figure 56
IR Drop Test Station

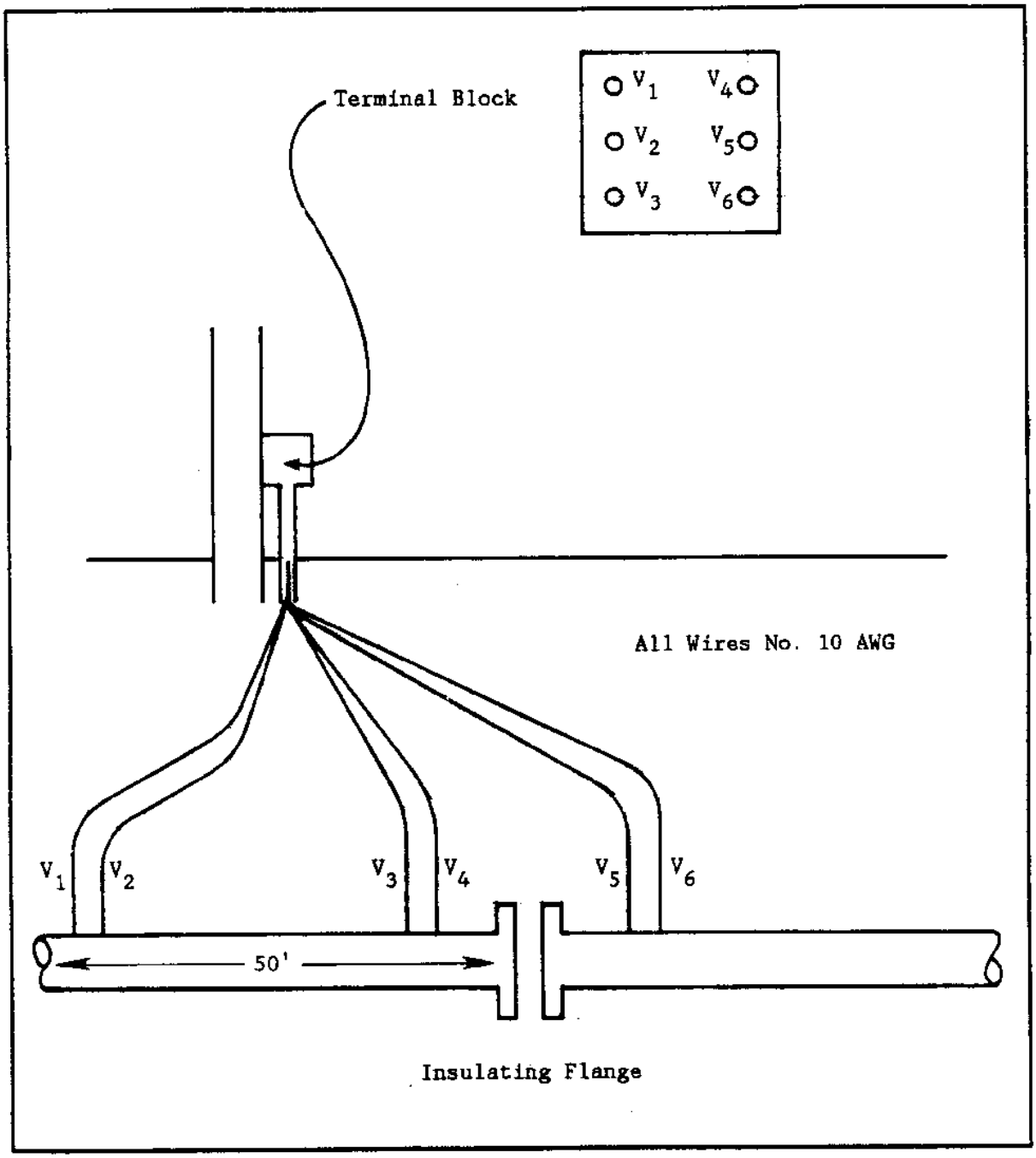

Figure 57
Insulating Flange Test Station (Six-Wire)

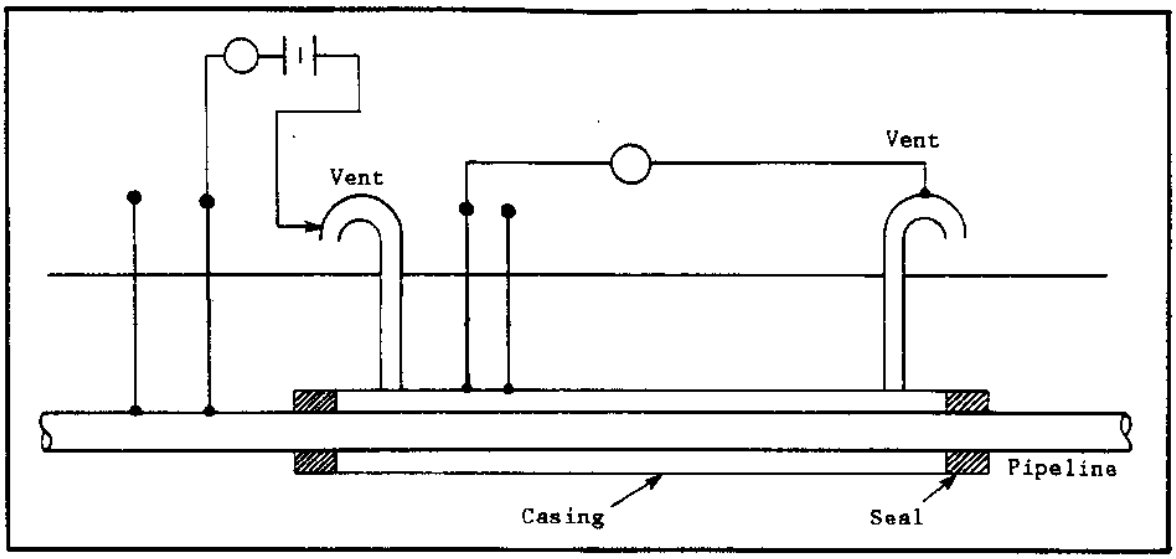

Figure 58
Wiring for Casing Isolation Test Station

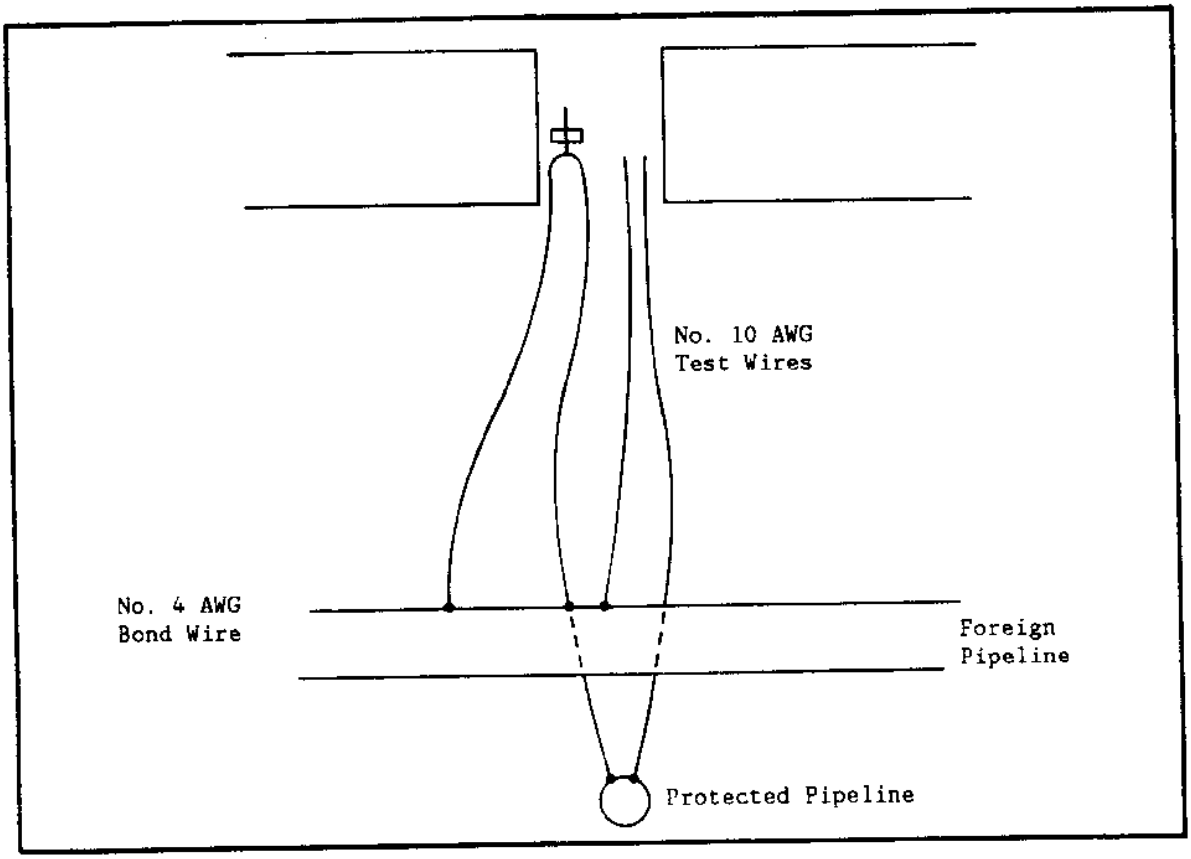

Figure 59
Bond Test Station

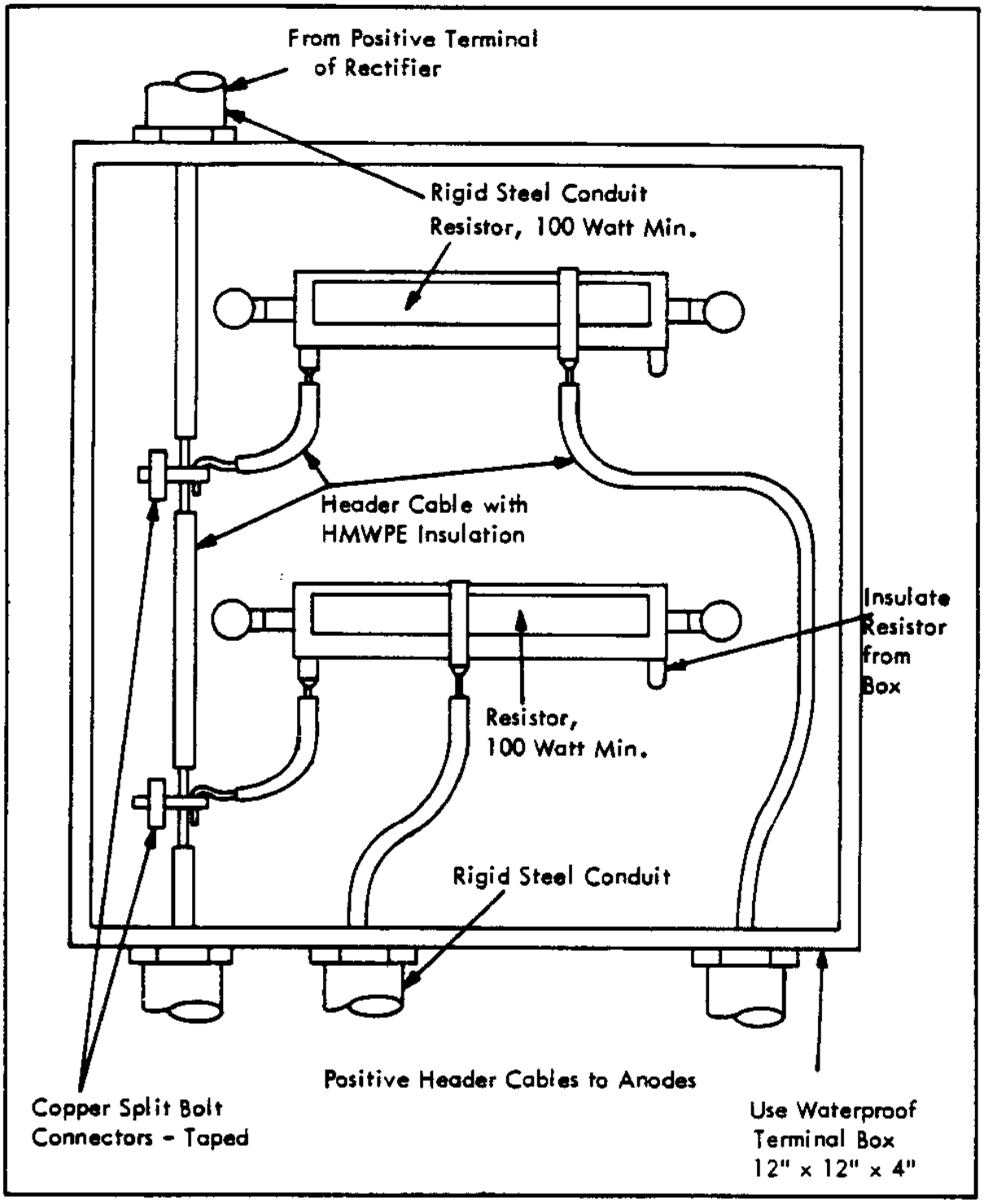

Figure 60
Anode Balancing Resistors

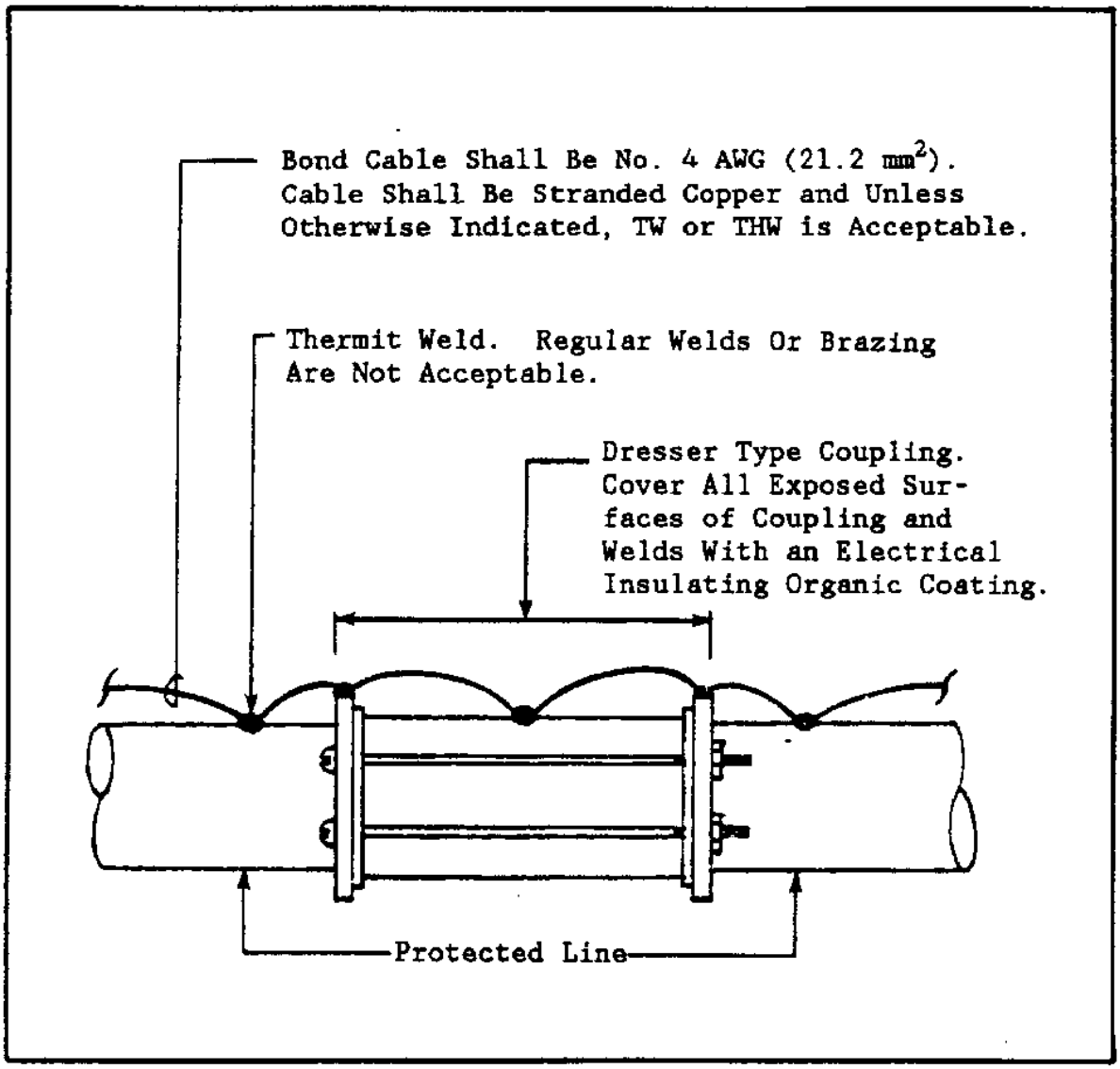

Figure 61
Bonding of a Dresser-Style Coupling

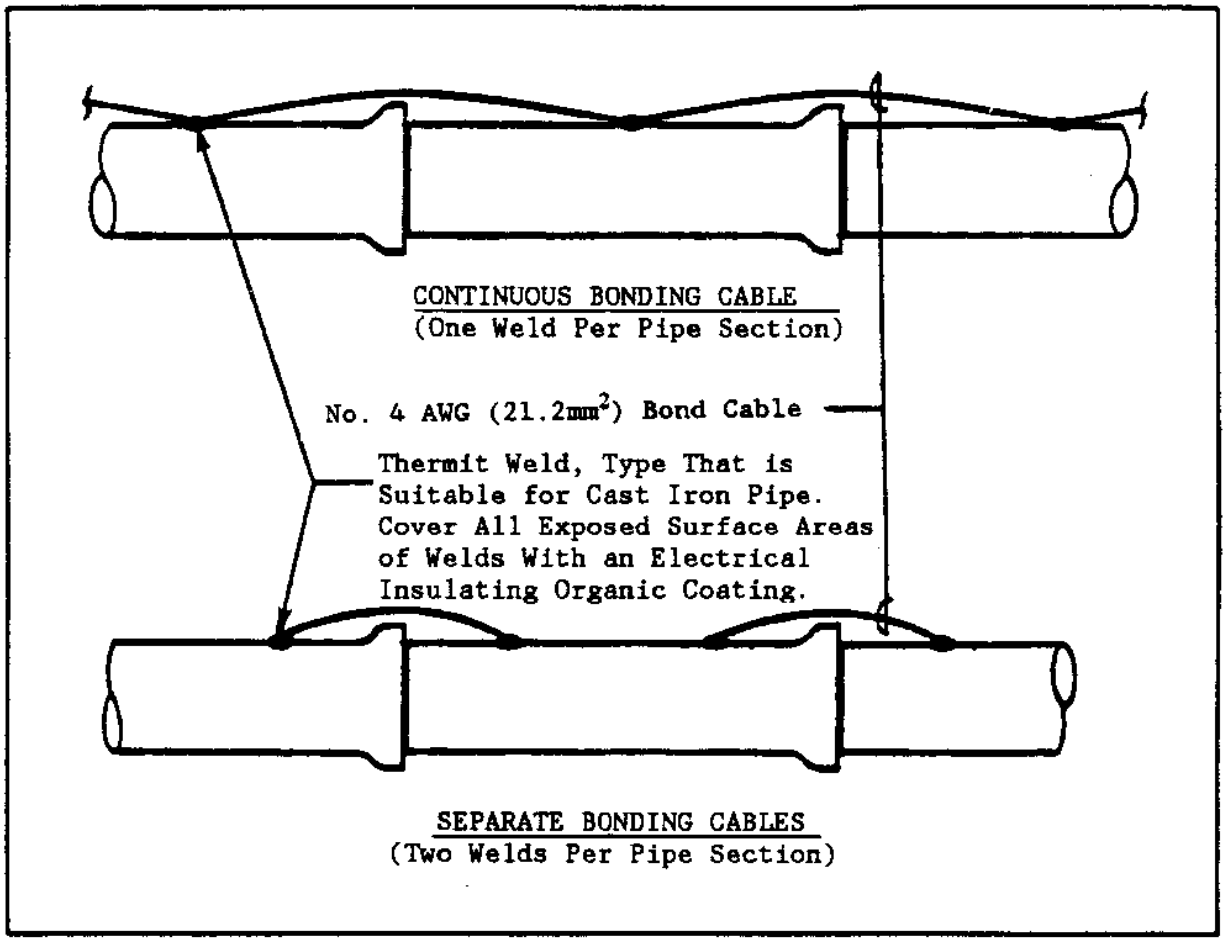

Figure 62
Bonding Methods for Cast Iron Bell-and-Spigot Pipe

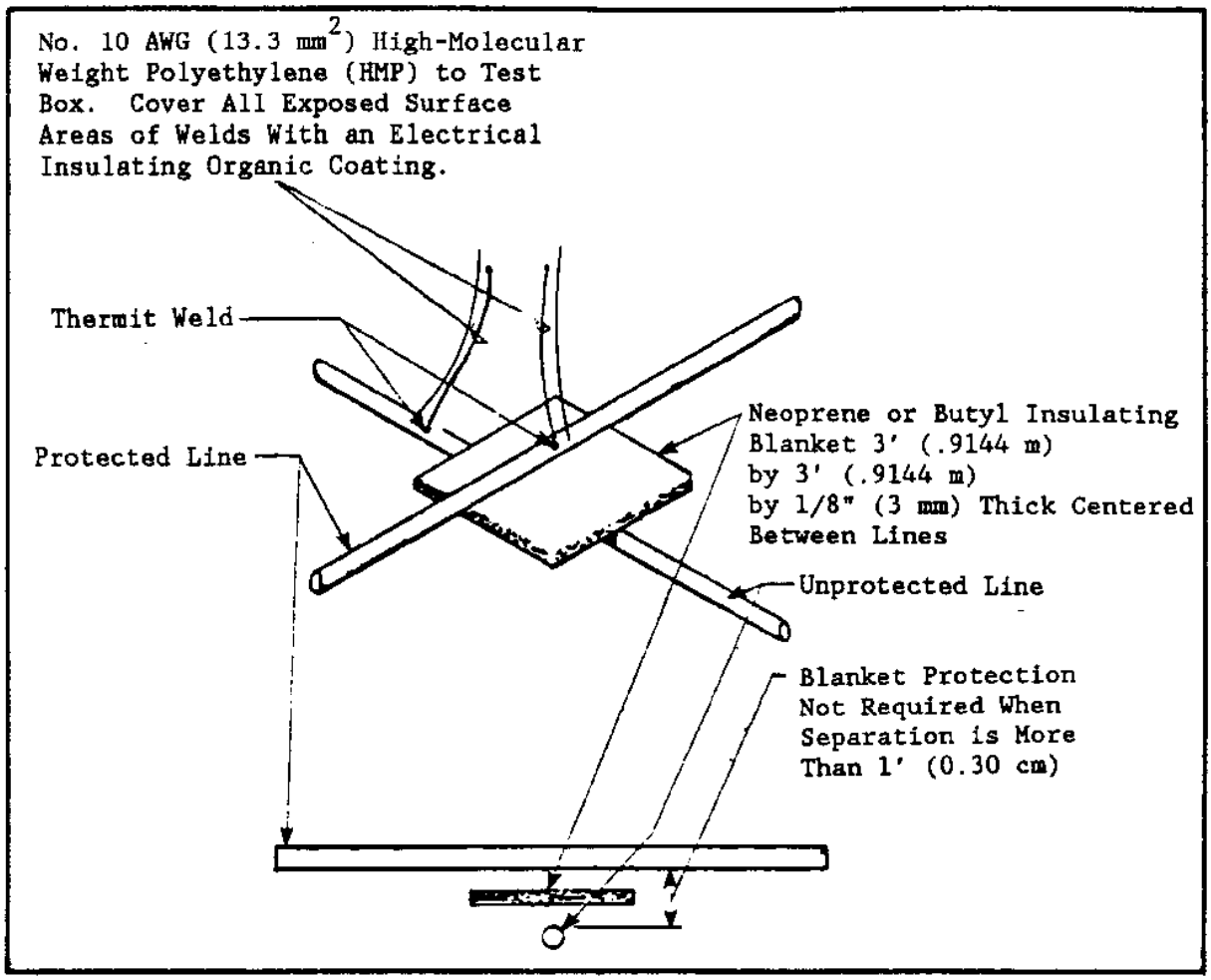

Figure 63
Isolating a Protected Line from an Unprotected Line

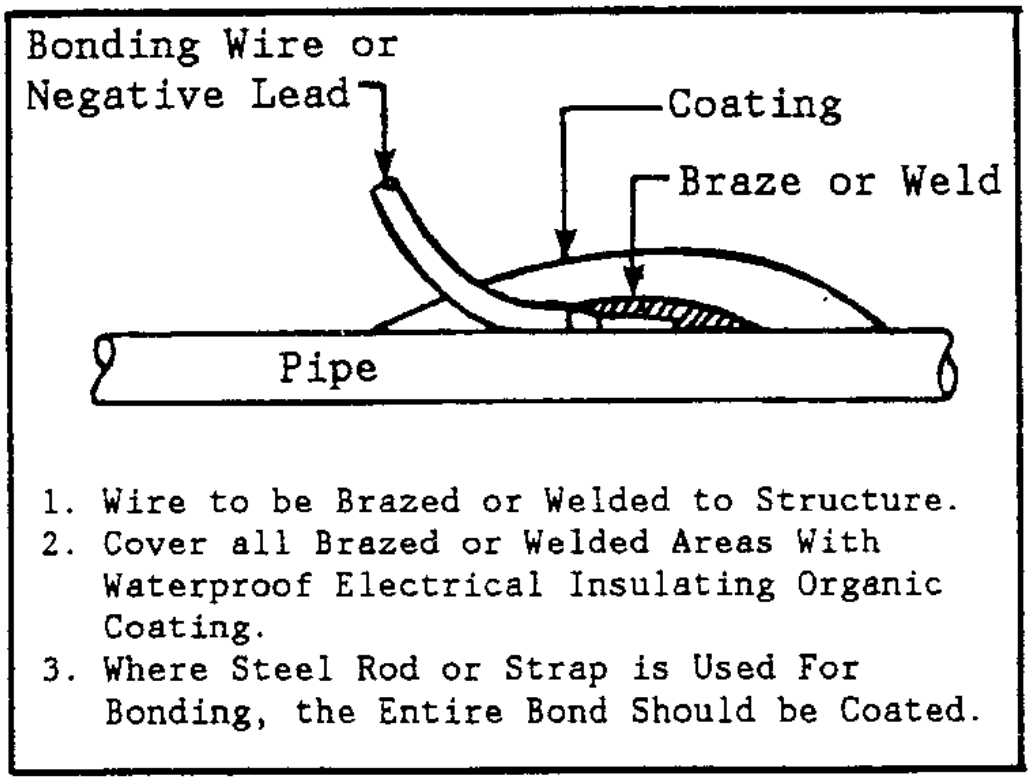

Figure 64
Electrical Bond

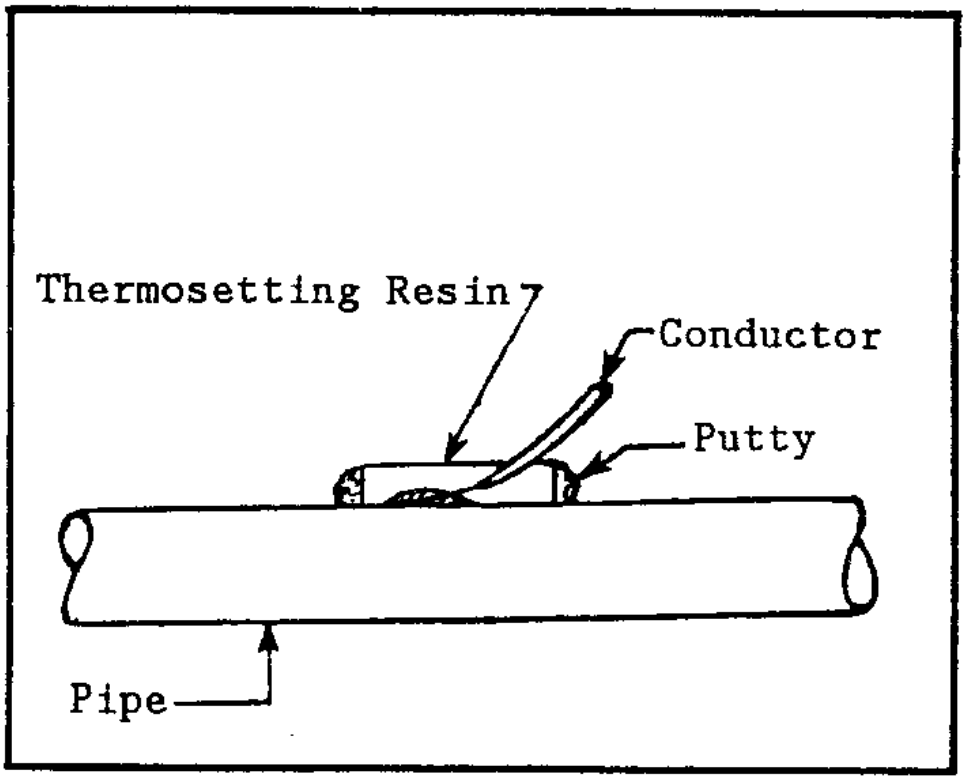

Figure 65
Thermosetting-Resin Pipe Connection

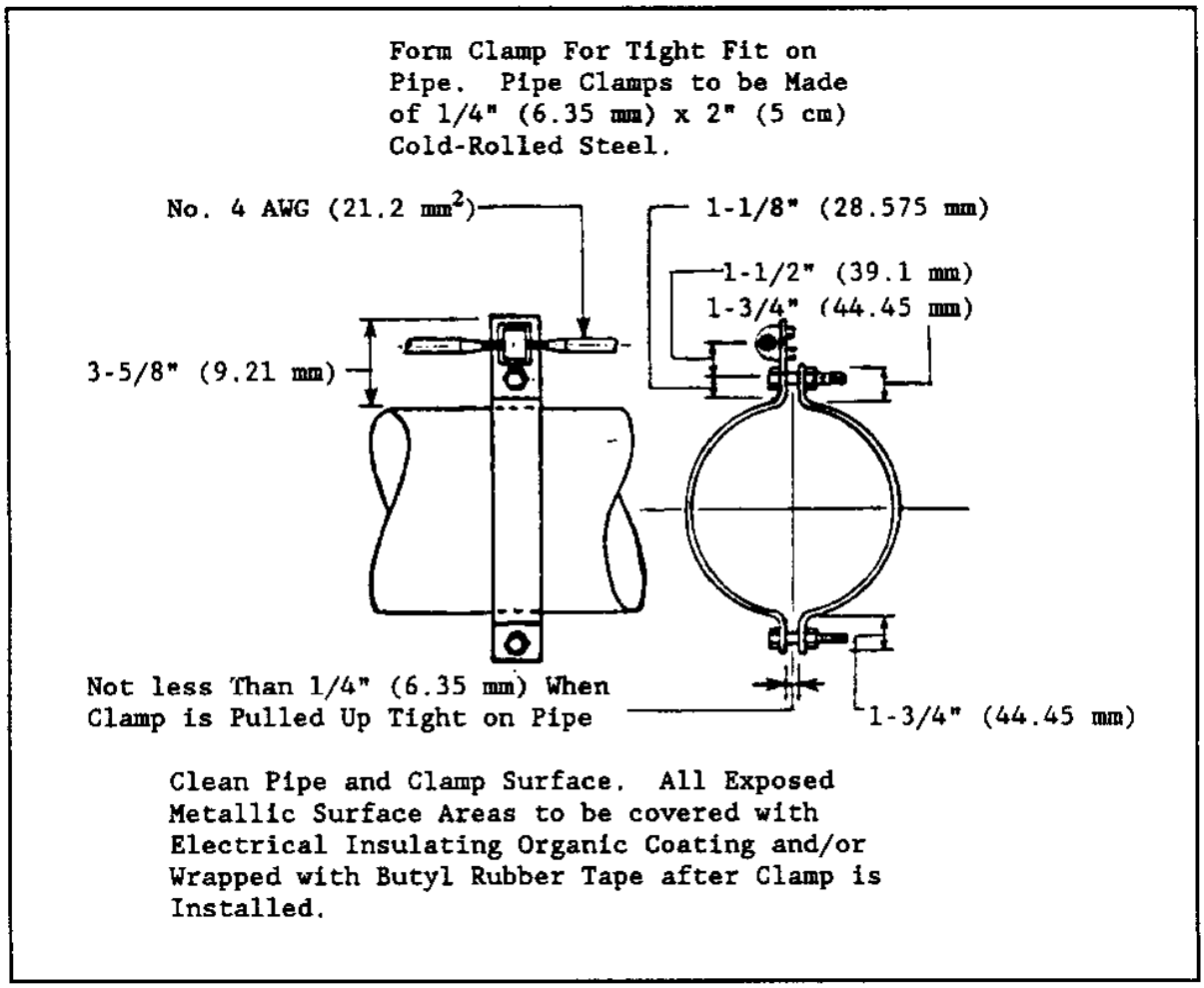

Figure 66
Clamp Type Bonding Joint

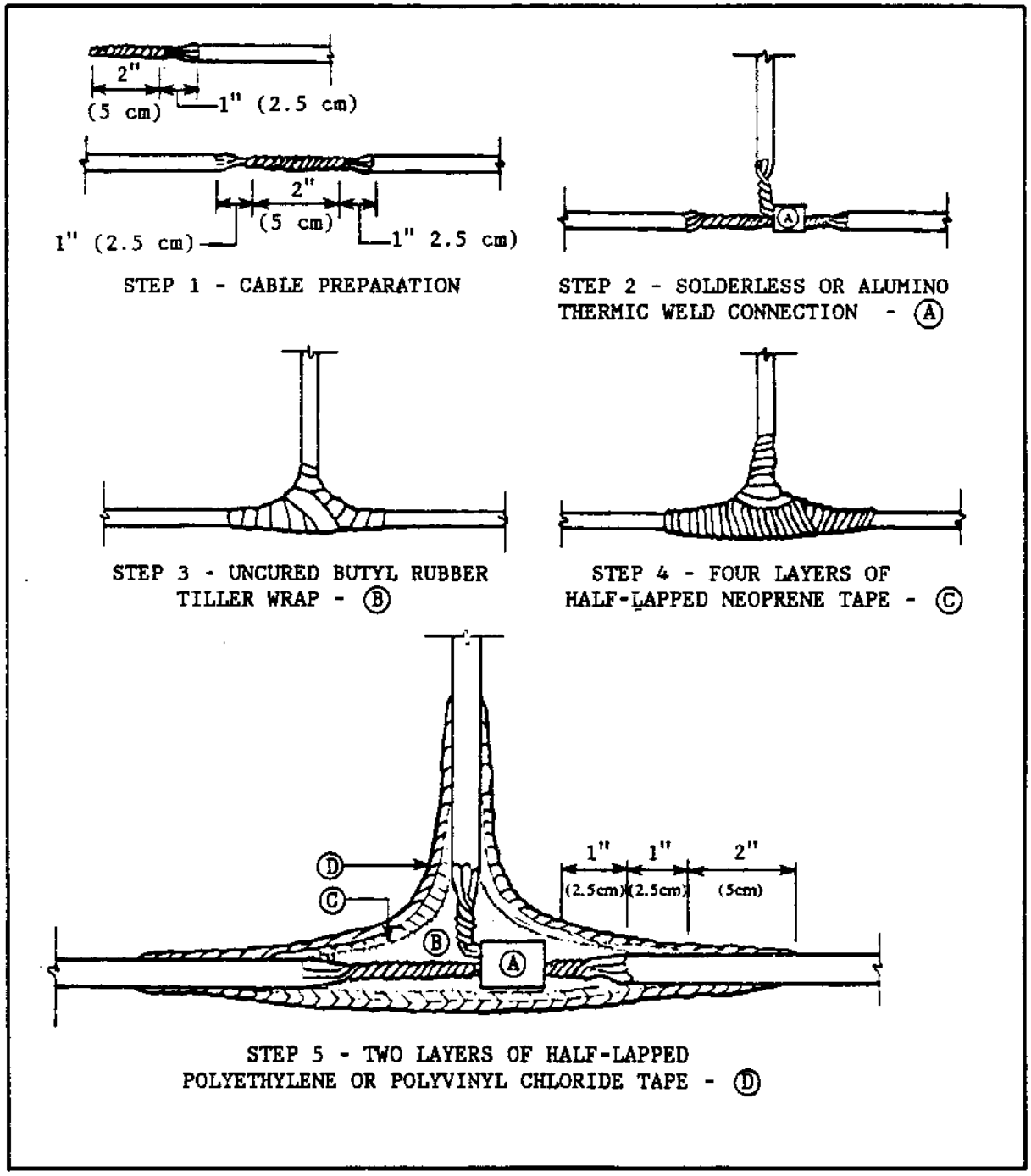

Figure 67
Underground Splice

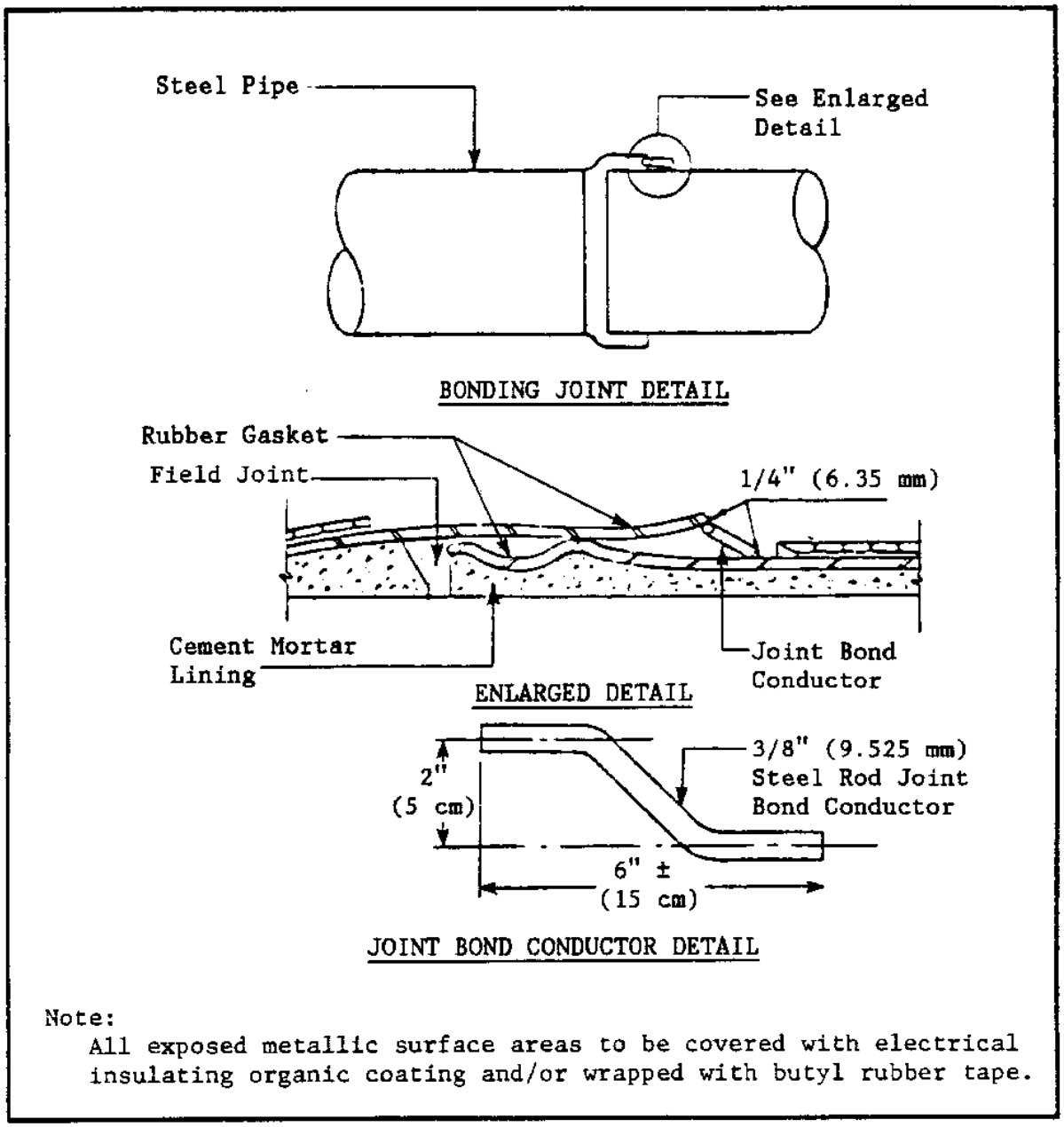

Note:
All exposed metallic surface areas to be covered with electrical insulating organic coating and/or wrapped with butyl rubber tape.

Figure 68
Welded Type Bonding Joint for Slip-On Pipe Installed Aboveground

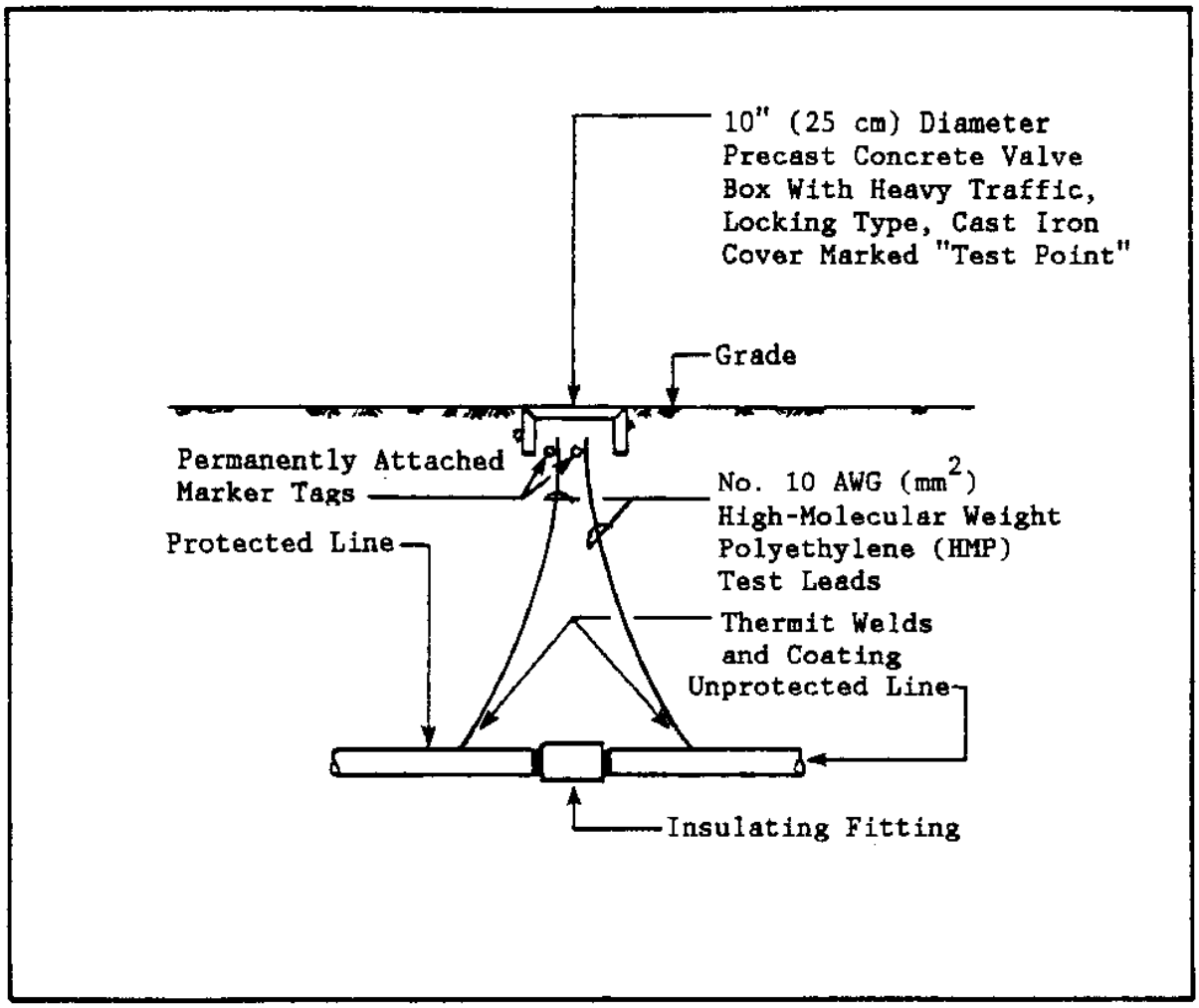

Figure 69
Test Box for an Insulating Fitting

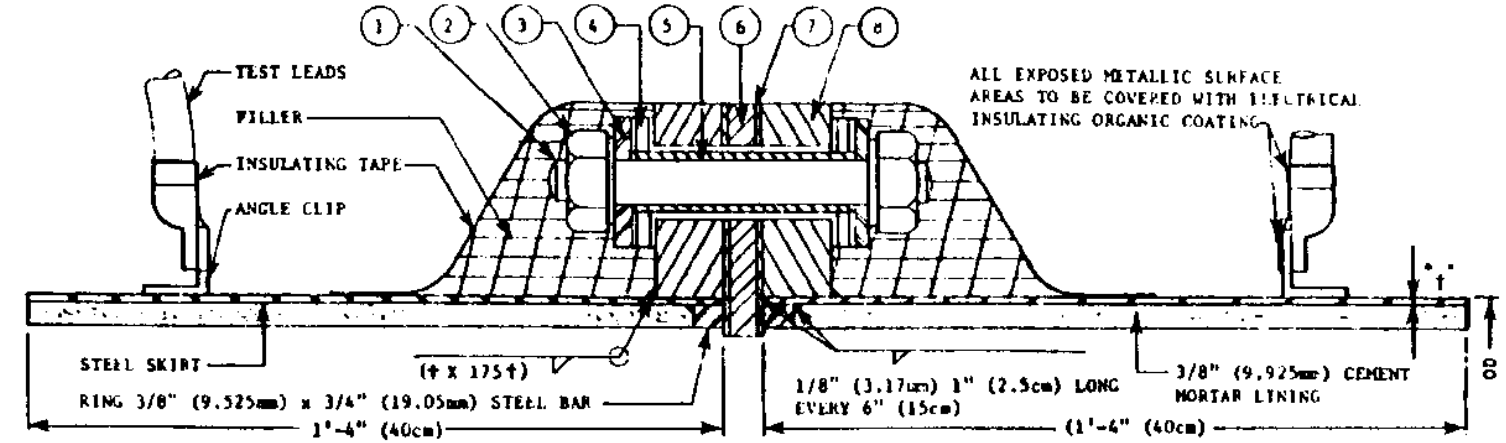

ITEM	DESCRIPTION
1	STUD BOLT, HEAT-TREATED HIGH-TENSILE ALLOY STEEL, 105,000 PSI YIELD POINT. ANSI NC THREAD ENTIRE LENGTH.
2	HEX NUT, MED CARBON, OIL QUENCHED, SEMIFINISHED. ANSI HEAVY SERIES, SIZE AND THREAD TO FIT STUD BOLT.
3	STEEL WASHER, 3/8" (9.525mm), THICK, ROUND, FACES TO BE FLAT AND PARALLEL.
4	BAKELITE WASHER, 1/2" (12.7mm) THICK SQUARE.
5	BAKELITE SLEEVE, LENGTH IS 1/8" (3.175mm) LESS THAN DISTANCE BETWEEN STEEL WASHERS.
6	BAKELITE GASKET, 1/2" (12.7mm) THICK, FULL FACE, ANSI CLASS 150 FLANGE DRILLING. SEE DETAIL OF 30" (76cm) GASKET.
7	ASBESTOS COMPOSITION GASKET, FULL FACE WITHOUT GRAPHITE. BOLT HOLES TO MATCH ANSI CLASS 150 FLANGE DRILLING.
8	FLANGE, ANSI CLASS 150.

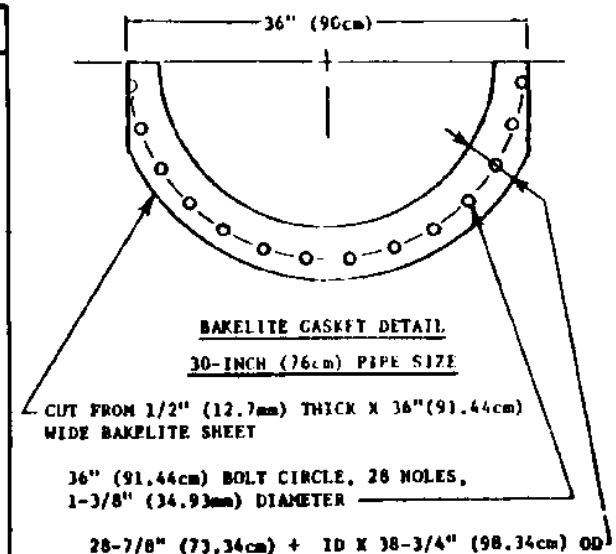

Figure 70
Steel Insulating Joint Details for Flanged Pipe Installed Below Grade

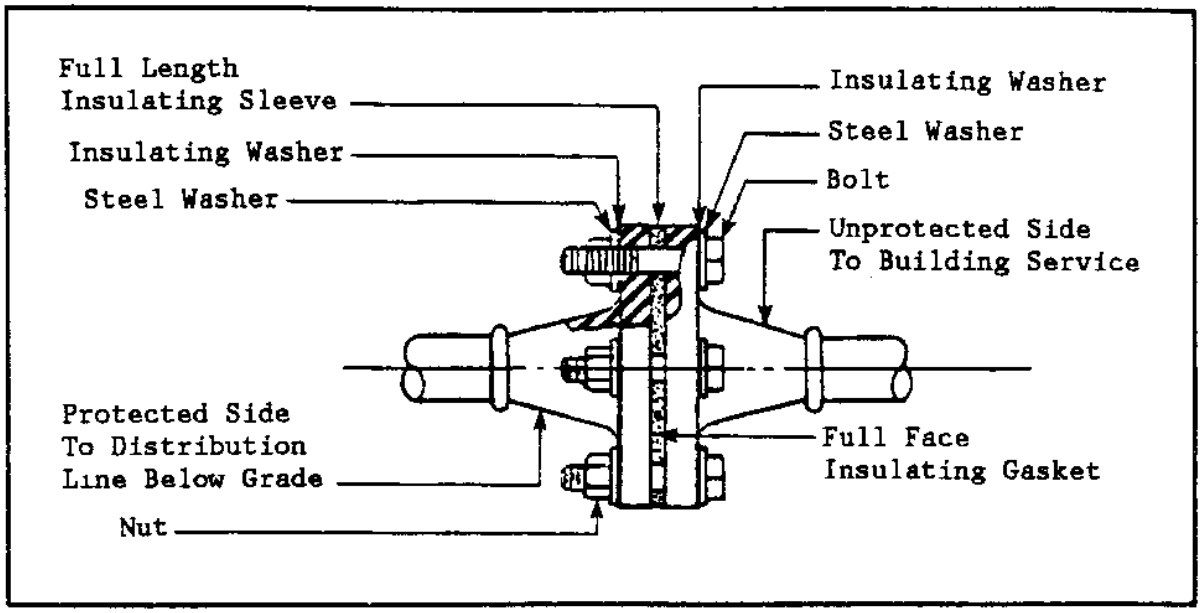

Figure 71
Steel Insulating Joint Details for Aboveground
Flanged Pipe

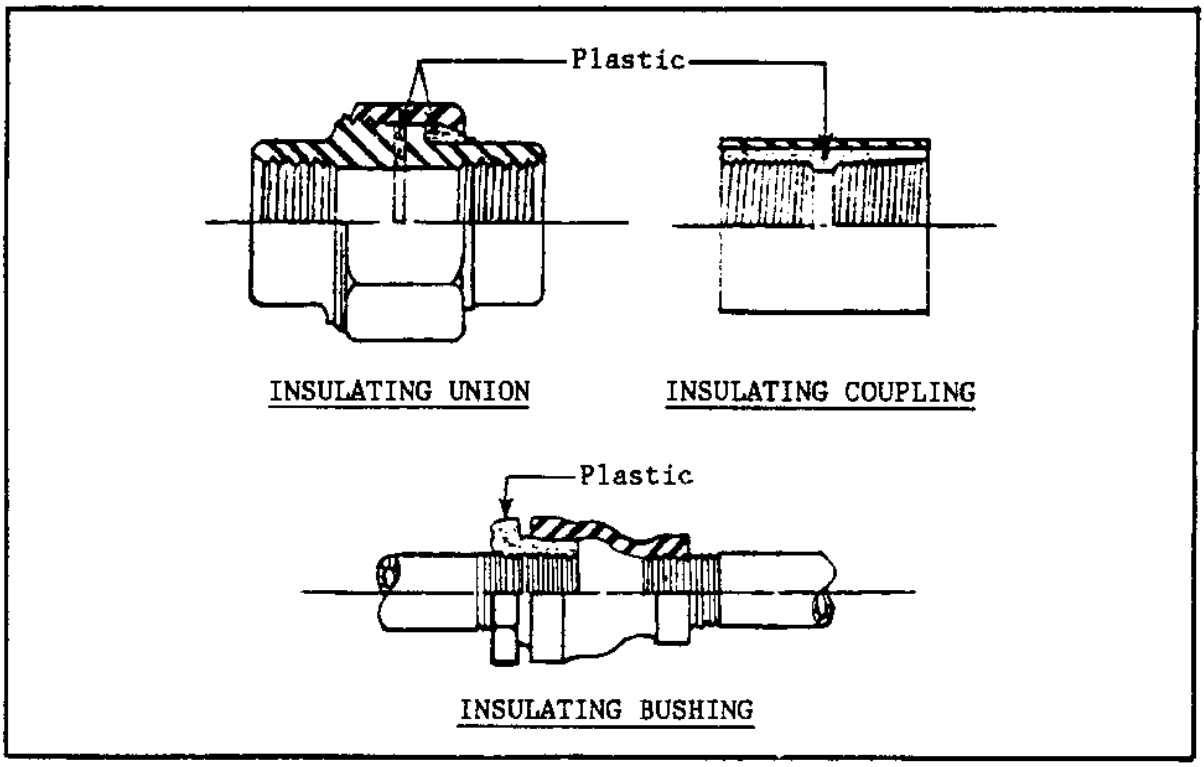

Figure 72
Insulating Joint Details for Screwed Pipe Connections

Section 7: SACRIFICIAL ANODE SYSTEM DESIGN

7.1 Theory of Operation. The basic principle of cathodic protection using sacrificial anodes is the electrochemical cell (refer to para. 2.2). As in the case of impressed current cathodic protection, high energy (potential) electrons are forced to flow from the anode to the structure to be protected. The structure-to-electrolyte potentials required for protection are identical to those for impressed current cathodic protection systems. These potential requirements are given in para. 3.2. The high potential electrons are generated through the corrosion of an active metal such as magnesium or zinc (refer to para. 3.2). In this type of system, the anode material is consumed, or sacrificed in the process, and the anodes must be periodically replaced in order to obtain continued protection. In order to minimize periodic anode replacement, sufficient anode material is normally provided so that the anode replacement interval is a desired number of years. Common practice for buried systems is to design the system for a 10- to 15-year anode life. For submerged systems, or for buried systems where anode replacement is difficult, longer (20- to 30-year) anode life is often used as a design criteria.

7.1.1 Advantages of Sacrificial Anode Cathodic Protection Systems. The primary advantage of sacrificial anode cathodic protection systems over impressed current cathodic protection systems is their simplicity and reliability. There are fewer critical components such as rectifiers in sacrificial anode systems. The critical cable from the anode to the impressed current anodes which is prone to failure is not a factor in sacrificial anode cathodic protection systems. The anode-to-structure cable in sacrificial anode systems is at a negative (protected) potential. Sacrificial anode cathodic protection systems are also in some cases less costly to install and maintain than impressed current cathodic protection systems. This is particularly true for systems with small current requirements (0.5 A or less per 100 lineal feet of structure). There are no power costs or costs associated with furnishing power at a remote site associated with sacrificial anode cathodic protection systems.

Another major advantage of sacrificial anode cathodic protection systems is the nearly zero probability that interference problems will be experienced when this type of system is used. Sacrificial anode cathodic protection systems are commonly of the distributed anode type. This is usually necessary because of the limited driving potential of the anode materials used.

7.1.2 Disadvantages of Sacrificial Anode Cathodic Protection Systems. The primary disadvantages of sacrificial anode cathodic protection systems are associated with the limited driving potential between the structure and the anode materials used. This limits the current output of the anodes and restricts the area of structure which can be protected using a single anode. Anode consumption is also inherent in sacrificial anode systems and allowances for periodic anode replacement must be made.

7.2 Sacrificial Anode Cathodic Protection System Design Procedures. The basic principles for the design of sacrificial anode cathodic protection systems are described in para. 4.2. First, the total amount of current is determined, then the output per anode is determined. Then the number of anodes required and the life of the anodes is determined. If desired, the system parameters (anode size or type) are adjusted to give desired system performance, primarily to achieve desired anode life.

7.3 Determination of Current Required for Protection. The first step in the design of sacrificial anode type cathodic protection systems (refer to para. 4.2.6) is the determination of the total current required for the system. This fixes the current to be supplied by the sacrificial anodes.

7.4 Determination of Anode Output. The output of a single anode in the environment is determined. This may be determined by a simplified method which uses standard factors for the type and size of anode to be used and for the structure-to-electrolyte potential desired. Single anode output can also be determined by using the driving potential between the anode and the structure and the total circuit resistance. The anode-to-electrolyte resistance is a major factor in most cases. This method is essentially identical to the design procedure for impressed current systems.

7.4.1 Simplified Method for Common Situations. The formula given in para. 4.2.5 can be used to estimate the output of zinc or magnesium anodes in environments where the resistivity is above 500 ohm-cm. The following formula gives a good approximation of current output in many cases and can be used to check the results of the more detailed procedure outlined in para. 7.4.2.

EQUATION:

$$i = Cfy/P \tag{21}$$

where

i = current output (mA)
C = material constant
f = size factor
y = potential factor
P = environmental resistivity

7.4.2 Determination of Output Using Anode-to-Electrolyte Resistance. As in the case of impressed current systems, this method determines the total resistance of the cathodic protection circuit including anode-to-electrolyte resistance, structure-to-electrolyte resistance, and the resistance of all electrical connections and splices. Then, using the difference between the anode potential and the protected structure potential, the current output is determined using Ohm's Law.

7.4.2.1 Calculation of Anode-to-Electrolyte Resistance. As in the case of impressed current systems, the resistance between the anode and the environment is commonly the highest resistance in the cathodic protection circuit. This is particularly true when the anodes are located a small distance (10 feet or less) from the structure to be protected. The anode-to-electrolyte resistance can be calculated using simplified equations which are adapted to the most common situations, or the more complex but more general basic equations.

Simplified expressions for the determination of the anode-to-electrolyte resistance for a single vertical anode is given in para. 6.2.1.4. This formula is valid for sacrificial and impressed current anodes. The basic equations given in para. 6.2.1.3 are valid for sacrificial anode and impressed current systems. In some cases, it is desirable to use groups of two or three sacrificial anodes in order to provide the required current or anode life using stock size anodes. In this case, the paralleling factors given in para. 6.2.1.4 can be used to calculate the equivalent resistance of the anodes in parallel. In some cases where this method is used, an adjustable resistor or nichrome wire resistor is installed in the anode-to-structure cable to limit the current to the required value. In this case, the determination of the anode-to-electrolyte resistance is used to calculate the value of the resistor required.

7.4.2.2 Determination of Structure-to-Electrolyte Resistance. The structure-to-electrolyte resistance is commonly disregarded in the design of sacrificial anode cathodic protection systems since it is usually small with respect to the anode-to-electrolyte resistance.

7.4.2.3 Connecting Cable Resistance. The connecting cable resistance is determined by the size and length of cables used. The selection of appropriate wire sizes is described in para. 6.6.1. No. 12 AWG solid copper wires are commonly supplied on sacrificial anodes and No. 10 AWG wires are commonly used as connecting cables. These wires have a resistance of 1.02 and 1.62 ohms per 1,000 feet, respectively. Since connecting cables are short and currents are low in most sacrificial anode cathodic protection systems, connecting cable resistance can usually be neglected.

7.4.2.4 Resistance of Connections and Splices. The need to maintain low resistance throughout the life of the sacrificial anode cathodic protection system is more important than the initial resistance of connections. Although deterioration of connections in sacrificial anode cathodic protection systems is protected, the connections are still subject to corrosion resulting in increased resistance. As in the case of impressed current cathodic protection systems, the number of connections should be kept to an absolute minimum, and they should be very carefully assembled, insulated, inspected, and installed. The number and location of each connection should be installed per the system design and not at the discretion of the installer.

7.4.2.5 Total Circuit Resistance. The total circuit resistance (usually only the anode-to-electrolyte resistance is a major factor) is then determined by adding all of the resistances of the circuit elements.

7.4.2.6 Anode-to-Structure Potential. The potential difference between the anode and the protected structure is then determined. In most cases, the open circuit anode potential and a structure potential (for steel) of -850 mV versus copper/copper sulfate is used. Other structure potential criteria can be used as necessary. Use of an anode potential lower than the open circuit potential may be required when anode outputs are high as in very low resistivity environments.

7.4.2.7 Anode Output Current. The anode output current is then determined from the circuit resistance and the structure-to-anode potential using Ohm's Law.

7.4.3 Field Measurement of Anode Output. Calculations, as in the case of impressed current systems, can only give approximations of anode-to-electrolyte resistance under actual conditions. While these calculations can be used for an initial system design, the actual anode output encountered is often sufficiently different from the calculated value to require adjustment or modification of the system. This is more of a problem for sacrificial anode systems than for impressed current systems since the output potential is not adjustable in sacrificial anode systems. In areas where the soil resistivity varies with location, a field measurement must be made at each anode location. Often the only remedy for low anode output is to add additional anodes to the system. High anode output can be remedied by installing current limiting resistors in the anode lead wires, but this should be avoided where possible. The actual anode output can best be determined by actual field measurements.

Anode output is best determined by installing an anode at the actual site of the installation and attaching it to the structure to be protected. The anode output is measured using a current shunt (0.01 or 0.1 ohm) installed in the anode lead wire. As a single anode is unlikely to polarize the structure to the desired potential, correction of the anode output for structure potential is usually required. This can be done using the structure potential factor in the simplified equation given in para. 4.2.5, or by determining the anode-to-electrolyte resistance based upon the actual potential difference achieved and the anode output current.

7.5 Determination of Number of Anodes Required. After the output per anode is determined, the number of anodes required for protection is calculated. This is done by dividing the total output by the output per anode. In practice, approximately 10 percent more anodes are installed to allow for inaccuracies in system design, seasonal variations in anode output, and decreased anode output as the anodes are consumed. Installation of a limited percentage of additional anodes is not wasteful because, if the system is properly adjusted, additional anodes simply result in longer anode life.

7.6 Determination of Anode Life. The anode life is calculated based upon the current flow, anode weight, and anode efficiency. The calculation involves the number of ampere hours produced by an anode per pound on anode material consumed. Anode consumption can be calculated using the formula:

EQUATION:

$$W = YSI \tag{22}$$

where

W = anode consumption in pounds
Y = number of years
S = anode consumption rate in lbs/A yr based upon actual anode efficiency
I = current output in amperes

For some anode materials, the anode efficiency is dependent upon anode current density as shown in Figure 73. For these materials, the anode consumption can be calculated using the formula:

EQUATION: $$W = YSI/E \quad (23)$$

where

W = anode consumption in pounds
Y = number of years
S = theoretical anode consumption rate in lbs/A yr
I = current output in A
E = anode efficiency

For the standard alloy magnesium material, the anode efficiency is essentially constant above 250 mA/ft² of anode area. If the anode efficiency is low at the anode current density at which it is operated, anode material is wasted due to self corrosion. At an anode efficiency of 50 percent, one-half of the anode material is consumed by self corrosion and one-half is consumed in providing protective current. If the desired anode life is not obtained using an initially selected anode material and size, a different sized anode or one of a different material is substituted and the process repeated in an iterative manner until a system with the desired characteristics is obtained.

7.7 Seasonal Variation in Anode Output. Anode output will vary as the resistivity of the environment changes. Seasonal variations associated with soil moisture in buried systems or seawater dilution in estuaries may result in changes in anode output. Fortunately, in most cases the current required for protection is also reduced when the resistivity of the environment increases so that this effect is partially self compensating. In some cases, however, anode output will fall below or above the limits for protection and the system will require seasonal adjustment or augmentation in order to provide adequate protection.

7.8 Sacrificial Anode Materials

7.8.1 Magnesium. Magnesium is the most commonly used sacrificial anode material for the protection of buried structures. Magnesium anodes are also used for the protection of the interiors of water tanks and heaters, heat exchangers and condensers, and waterfront structures. Magnesium anodes are available as castings and extrusions weighing from 1 to 200 pounds, and in a wide variety of shapes (refer to para. 7.8.1.4). Two anode compositions are commonly used. They are the standard alloy and a "high potential" alloy. The composition of each alloy is given in para. 7.8.1.1.

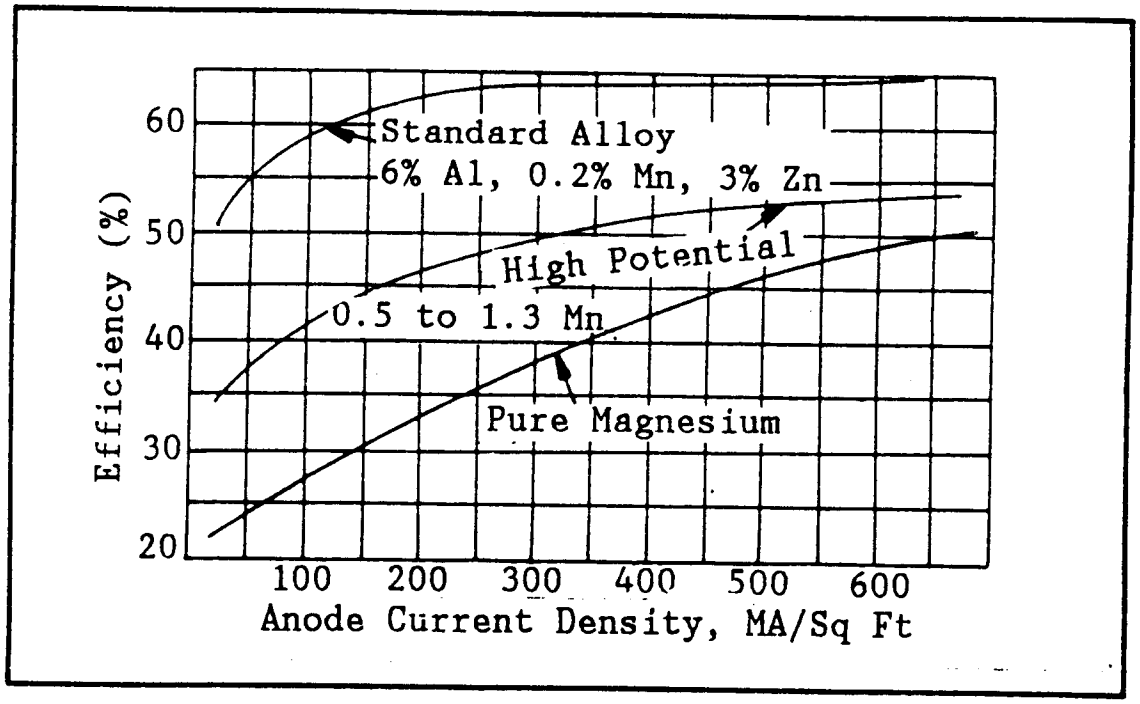

Figure 73
Efficiency Versus Current Density - Magnesium Anodes

7.8.1.1 Composition. The composition of both the standard alloy and high potential magnesium alloy are given below:

Element	Standard	High Potential
Aluminum	5.3 - 6.7%	0.1% max
Manganese	0.15% min	0.5 - 1.3%
Zinc	2.5 - 3.5%	-
Copper	0.02% max	0.02% max
Silicon	0.1% max	-
Iron	0.003% max	0.03% max
Nickel	0.002% min	0.001% max
Other metals	0.3% max	0.3% max total 0.05% max each
Magnesium	Remainder	Remainder

7.8.1.2 Anode Efficiency. The theoretical efficiency of magnesium is 1,000 ampere hours per pound or 8.8 lbs/A yr. The efficiency of magnesium alloys used for cathodic protection seldom exceeds 65 percent of this theoretical value due to self consumption. The efficiency of both the standard alloy and high potential alloy magnesium alloys is dependent on the current densities on their surfaces as shown in Figure 73. The efficiency of the standard alloy is higher than the efficiency of the high potential alloy. Thus, the high potential alloy should only be used when its higher driving potential is required (usually in soil resistivities above 12,000 ohm-cm). For design purposes, 50 percent is used for the efficiency of both types.

7.8.1.3 Potentials. The open circuit potential of the standard alloy is approximately -1.55 V versus copper/copper sulfate. The open circuit potential of the high potential alloy is approximately -1.75 V versus copper/copper sulfate.

7.8.1.4 Sizes. Magnesium anodes are available in a wide variety of sizes and shapes as shown in Tables 12 through 17. In addition to the sizes shown, magnesium alloy anode material is available as a "ribbon" anode which consists of a 10-gauge steel wire surrounded by standard alloy magnesium 3/8 by 3/4 inch. Magnesium ribbon anodes are used in situations such as inside casings where the space available is limited, or to protect small diameter utility cables.

7.8.1.5 Current Output. Current output from magnesium anodes should be determined from the formulae in para. 7.4.2 or by field measurement as described in para. 7.4.3.

7.8.1.6 Backfill. For soil installations, the use of backfill is highly desirable and is required in all cases. Composition of typical backfill material for use with magnesium anodes is given below:

Composition of Backfill for Magnesium Anodes

Gypsum	75%
Bentonite	20%
Sodium Sulfate	5%

Anodes are available in prepackaged permeable cloth bags filled with prepared backfill. Prepackaged anodes are commonly supplied with an outer impermeable wrapping such as plastic. The impermeable wrapping must be removed from these anodes prior to installation.

7.8.2 Zinc. Zinc anodes are commonly available in weights from 5 pounds to 250 pounds in the form of plates, bars, and rods as described in Tables 18 through 21. Zinc is also available as ribbon anodes in 5/8- by 7/8-inch, 1/2- by 9/16-inch, and 11/32- by 15/32-inch sizes, each with a 1/10-inch-diameter galvanized steel wire core. Zinc anodes are most commonly used in immersion service either in fresh or salt water. They are, however, occasionally used in the protection of buried structures when special circumstances are encountered. Two zinc anode compositions are commonly available. They are a standard alloy formulated for use in fresh water and soil and an alloy specially formulated for use in seawater. The composition of these alloys is given in para. 7.8.2.1.

Table 12
Standard Alloy Magnesium Anodes - Standard
Sizes for Use in Soil

WEIGHT (lb)	SIZE (in.)	PACKAGED WEIGHT (lb)	PACKAGED SIZE (in.)
3	3 x 3 x 5	8	5.25 x 8
5	3 x 3 x 8	13	5.25 x 11.25
9	3 x 3 x 14	27	5.25 x 20
10	1.5 x 1.5 x 70	-	-
12	4 x 4 x 12	32	7.5 x 18
16	2 x 2 x 60	-	-
17[1]	4 x 4 x 17	45	7.5 x 24
17	3 x 3 x 28	-	-
32	5 x 5 x 20-1/3	68	8.5 x 28
40	3 x 3 x 60	-	-
50	5 x 5 x 31	-	-
50	7 x 7 x 16	100	10 x 24
50	8 x 16	100	10 x 24
60	4 x 4 x 60	-	-

[1]Most common size used.

NOTE: Core material for soil anodes is a galvanized, open pitch, spiral-wound strip 3/8-inch inside diameter (id), 1/2-inch outside diameter (od). Connecting wire for soil anodes is a 10-foot length of single-strand No. 12 American Wire Gage (AWG) thermoplastic waterproof (TW) insulated copper wire, silver-soldered to the core with the joints sealed against moisture. Special connecting wires or lengths other than 10 feet are available.

Table 13
Standard Alloy Magnesium Anodes - Standard
Sizes for Use in Water

WEIGHT (lb)	SIZE (in.)	TYPE OF CORE
20	3.5 x 3.5 x 26	3/4-in. diam galvanized pipe core, flush ends.
50	7 x 7 x 16	Threaded 3/4-in. diam galvanized pipe extending 1 inch both ends, flush ends optional.
50	7 x 7 x 16	1/2-in. diam galvanized eyebolt core.
50	8 x 16	3/4-in. diam galvanized pipe core, flush ends.
50	8 x 16	1/2-in. diam galvanized eyebolt core.
100	7 x 7 x 32	3/4-in. diam galvanized pipe core, flush ends.
100	7 x 7 x 32	1/2-in. diam galvanized eyebolt core.
100	8 x 32	3/4-in. diam galvanized pipe core, flush ends.
100	8 x 32	1/2-in. diam galvanized eyebolt core.

Table 14
Standard Alloy Magnesium Anodes -
Standard Sizes for Condensors
and Heat Exchangers

WEIGHT (lb)	SIZE (in.)	TYPE OF CORE
15	4 x 8 x 8	3/4-in. bolt
24	2 x 9 x 18	1/4- x 2-in. straps
44	4 x 9 x 18	1/2- x 2-in. straps
60	7 x 9 x 18	3/4-in. bolt

Table 15
Standard Alloy Magnesium Anodes - Elongated

WEIGHT (lb)	SIZE (in.)	PACKAGED WEIGHT (lb)	PACKAGED SIZE (in.)
1	1.32 x 12	6	3 x 15.5
3	2.35 x 10.5	10	4 x 14
5	2.63 x 14	14	4.5 x 18
9	2.49 x 28	37	5 x 33
17	2.86 x 40	60	5.5 x 46
32	3.75 x 44	96	6.5 x 50
50	4.58 x 46	120	7 x 52

Table 16
High Potential Alloy Magnesium Anodes - Standard
Sizes for Soil and Water

WEIGHT (lb)	SIZE (in.)	PACKAGED WEIGHT (lb)	PACKAGED SIZE (in.)
3	3.75 x 3.75 x 5	12	6 x 10
5	3.75 x 3.75 x 7.5	17	6 x 12
9	2.75 x 2.75 x 26	35	6 x 31
9	3.75 x 3.75 x 13.25	27	6 x 17
12	3.75 x 3.75 x 18	36	6 x 23
14	2.75 x 2.75 x 41	50	6 x 46
14	3.75 x 3.75 x 21	42	6.5 x 26
17	2.75 x 2.75 x 50	60	6 x 55
17	3.75 x 3.75 x 26	45	6.5 x 29
20	2.5 x 2.5 x 59.25	70	5 x 66
24	4.5 x 4.5 x 23	60	7 x 30
32	5.5 x 5.5 x 21	74	8 x 28
40	3.75 x 3.75 x 59.25	105	6.5 x 66
48	5.5 x 5.5 x 30	100	8 x 38
48	8 x 16	100	12 x 25
60	4.5 x 4.5 x 60	-	-

NOTE: Core material is a galvanized 20-gauge perforated steel strip. Anodes longer than 24 inches have a 9-gauge core. The connecting wire is a 10-foot length of solid No. 12 AWG TW insulated copper wire, silver-soldered to the core with joints sealed against moisture. Special wires or other lengths are available.

Table 17
Standard Alloy Magnesium Anodes - Standard
Size Extruded Rod for Water Tanks
and Water Heaters

WEIGHT PER FOOT (lb)	SIZE	TYPE OF CORE
0.36	0.75-in. diam x 1 ft to 20 ft	1/8-in. diam steel rod
0.45	0.84-in. diam x 1 ft to 20 ft	1/8-in. diam steel rod
0.68	1.05-in. diam x 1 ft to 20 ft	1/8-in. diam steel rod
1.06	1.315-in. diam x 1 ft to 20 ft	1/8 -in. diam steel rod
1.50	1.561-in. diam x 1 ft to 20 ft	1/8 - in. diam steel rod
2.50	2.024-in. diam x 1 ft to 20 ft	

Table 18
Zinc Anodes - Standard Sizes
for Underground or Fresh Water

WEIGHT (lb)	NOMINAL SIZE (in.)
5	1.4 x 1.4 x 9
18	1.4 x 1.4 x 36
27	1.4 x 1.4 x 48
30	1.4 x 1.4 x 60
30	2 x 2 x 30
50	2 x 2 x 48
60	2 x 2 x 60

NOTE: Core for standard anodes shown is 1/4-inch diameter electrogalvanized mild steel rod.

Table 19
Zinc Anodes - Special Sizes for
Underground or Fresh Water

WEIGHT (lb/in.)	SIZE (in.)	LENGTH (in.)
2.3	3 x 3	6 to 60
4.2	4 x 4	6 to 60
6.5	5 x 5	6 to 48
12.8	7 x 7	6 to 36
21.0	9 x 9	12 to 24
26.0	10 x 10	9 to 24

NOTE: Core is 1/4-inch diameter electro-galvanized mild steel rod. Also available in 3/8-inch, 1/2-inch, or 5/8-inch diameters.

Table 20
Zinc Anodes - Standard Sizes
for Use in Seawater

WEIGHT (lb)	SIZE (in.)
5	1.25 x 3 x 9
12	1.25 x 3 x 12
24	1.25 x 6 x 12
50	2 x 2 x 48
150	4 x 4 x 36
250	9 x 9 x 12
250	4 x 4 x 60

NOTE: The 24-pound and smaller anodes have galvanized steel mounting straps. The 50-pound size has a 3/8-inch diameter galvanized steel rod for core. Larger sizes have 3/4-inch or 1-inch diameter galvanized steel pipe cores.

Table 21
Zinc Anodes - Special Sizes for Use in Seawater

WEIGHT (lb/in.)	SIZE (in.)	LENGTH (in.)
0.5	1.4 x 1.4	6 to 60
1	2 x 2	6 to 60
2.3	3 x 3	6 to 60
4.2	4 x 4	6 to 60
6.5	5 x 5	6 to 48
12.8	7 x 7	6 to 36
21.0	9 x 9	9 to 24
23.4	9 x 10	9 to 24
26.0	10 x 10	9 to 24

NOTE: A variety of cores are available with the different sizes.

7.8.2.1 Composition. The compositions of the standard zinc alloy and the alloy formulated for use in seawater are given below:

Element	Standard Alloy[1]	Seawater Alloy[2]
Aluminum	0.005% max	0.10 - 0.50%
Cadmium	0.003% max	0.025 - 0.15%
Iron	0.00014% max	0.005% max
Lead	0.003% max	0.006% max
Copper	-	0.005% max
Silicon	-	0.125% max
Zinc	Remainder	Remainder

[1]Specification ASTM B-148, Type II
[2]Specification ASTM B-148, Type I; or MIL-A-18001H

7.8.2.2 Anode Efficiency. The theoretical anode consumption for zinc is 23.5 lbs/A yr or 372 ampere hours per pound (A hr/lb). The efficiency of zinc is greater than that of magnesium. The efficiency of zinc is commonly 90 percent to 95 percent regardless of current output. For design purposes, 90 percent is used for the efficiency of zinc.

7.8.2.3 Potentials. The open circuit potential of both commonly used zinc anode materials is -1.10 V in most soils or natural waters. The relative potential between zinc and iron is dependent upon temperature. At temperatures above ambient, the potential difference between the two materials is reduced. In some fresh waters, the potential can reverse at temperatures above 140 degrees F. Zinc should not be used to protect steel in such cases as hot water heaters.

7.8.2.4 Sizes. Both standard alloy and seawater type zinc anodes are available in a wide variety of sizes and shapes. Anodes used in soil usually have a galvanized mild steel rod core. This core is attached to the anode cable during installation of the anode. In both fresh water and seawater applications the anode is often attached directly to the structure to be protected by welding or bolting the steel rod, pipe, or strap core to the

structure. When suspended in water, the core is extended by welding on a steel extension. For suspended systems, the use of a cable continuity bond is recommended to insure that the resistance between the anode and the structure is minimized. Sizes and shapes of commercially available zinc alloys for cathodic protection are given in Tables 16 through 19. In addition, zinc ribbon anodes 5/8 by 7/8 inch weighing 1.2 pounds per foot (lb/ft) for seawater use are available. Two sizes of zinc ribbon anodes are available in the standard alloy: 1/2 by 9/16 inch weighing 0.6 lb/ft, and 11/32 by 15/32 inch weighing 0.25 lb/ft. All three of these commercially available zinc ribbon anodes have a 1/10-inch steel core.

7.8.2.5 Current Output. The current output of zinc anodes may be determined either by the calculations outlined in para. 7.4.2 or by field measurements as described in para. 7.4.3. When used without backfill, zinc anodes can become covered with nonconductive corrosion products which can reduce their current output. Seawater alloy anodes are specially formulated to reduce this tendency in seawater. When used in soil containing high levels of oxygen, carbonates, or phosphates, backfill should be used with zinc anodes in order to reduce the possibility of the buildup of these corrosion products.

7.8.2.6 Backfill. Two typical compositions of backfill used with zinc anodes in soils are given below:

Material	Type 1	Type 2
Hydrated gypsum	75%	50%
Bentonite	20%	50%
Sodium sulfate	5%	

7.8.3 Aluminum. Aluminum sacrificial anodes are a more recent development than either zinc or magnesium alloys. Their primary use is in the protection of structures in seawater. However, there is a potential for their use in fresh water or in soil. When the original anodes used are aluminum alloy and their performance has been satisfactory they should be replaced with anodes of the same type. Early formulations of aluminum alloys for use as a sacrificial anode contained mercury. While the amount of mercury contained in the alloy is small, the mercury tends to concentrate in the anode stubs which remain after the bulk of the anode has been consumed. Precautions should be taken during removal of the stubs, especially by methods which generate heat, to prevent mercury poisoning. Mercury containing aluminum alloy anode stubs must be disposed of properly.

7.8.3.1 Composition. The compositions of most aluminum alloy anodes are proprietary. Typical compositions of three proprietary alloys are given below:

Element	Type I	Type II	Type III
Zinc	0.35% - 0.50%	3.5% - 5.0%	3.0%
Silicon	0.10% max	-	0.1%
Mercury	0.035% - 0.048%	0.035% - 0.048%	-
Indium	-	-	0.015%
Aluminum	Remainder	Remainder	Remainder

The Type I alloy is formulated for submersion in full strength seawater. The Type II alloy is formulated for use when the anode may become immersed in bottom sediments. The Type III alloy is formulated for use in bottom sediments, full strength seawater, or in brackish water.

7.8.3.2 Anode Efficiency. Type I aluminum anodes have a consumption rate of approximately 1,250 A hrs/lb or 6.8 lbs/A yr. Type II aluminum anodes in bottom sediments have a reduced efficiency and a consumption rate of approximately 770 A hrs/lb or 11.4 lbs/A yr. Type III aluminum anodes have a consumption rate of approximately 1,150 A hrs/lb or 7.6 lbs/A yr.

7.8.3.3 Potentials. The potential of Type I and Type II aluminum anodes is -1.10 V versus copper/copper sulfate. Type III anodes have a slightly higher driving potential of -1.15 V versus copper/copper sulfate.

7.8.3.4 Sizes. Aluminum alloy anodes have been developed primarily for the protection of marine structures. They are available in a wide variety of sizes and shapes as shown in Tables 22 through 26. The bracelet anodes described in Table 24 are shown in Figure 74. These bracelet anodes are used for the protection of submerged pipelines and may also be used on pipe pilings.

7.8.3.5 Current Output. The current output of aluminum anodes can be determined either by the calculations outlined in para. 7.4.2 or by field measurements as described in para. 7.4.3. The current output for some sizes of aluminum anodes is provided by anode manufacturers and is calculated using an assumed structure potential of -850 mV versus copper/copper sulfate and an environmental resistivity of 20 ohm-cm. These values should be considered as estimates only and should be verified by calculations of tests.

7.9 Other System Components

7.9.1 Connecting Wires. Proper selection of cable size, type of insulation, and routing is necessary for proper and reliable system operation. Only copper cables should be used in any cathodic protection installation. High connection resistances and difficulty in making welded connections associated with the use of aluminum wires precludes their use in cathodic protection.

Table 22
Aluminum Pier and Piling Anodes - Standard Sizes

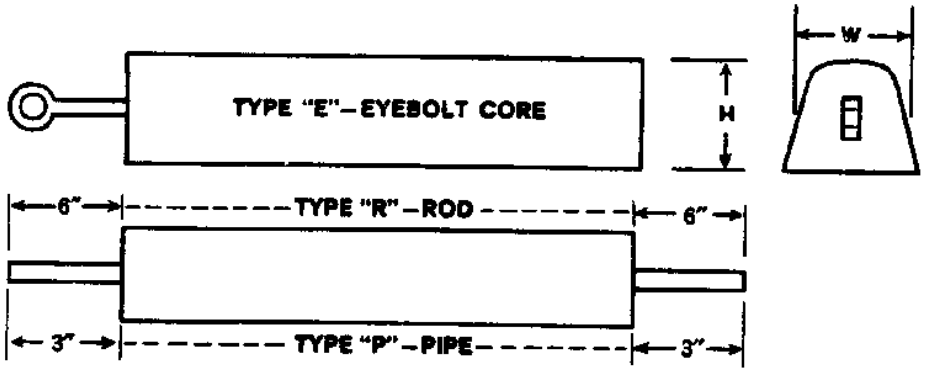

Unless otherwise specified, the following steel core size will be supplied;

Type "E"–½" Eyebolt
Type "P"– STD ¾" Pipe
Type "R"–½" Dia. Rod

ANODE NO.	NOMINAL WEIGHT (lb)	LENGTH (in.)	WIDTH (in.)	HEIGHT (in.)	CORE TYPE
A-240	240	24	10	10	E, P, or R
A-175	175	36	7	7	"
A-120	120	12	10	10	"
A-120-1	120	24	7	7	"
A-120-2	120	48	5	5	"
A-100	100	60	4	4	"
A-90	90	18	7	7	"
A-90-1	90	36	5	5	"
A-60	60	12	7	7	"
A-60-1	60	24	5	5	"
A-60-2	60	38	4	4	"
A-30	30	34	3	3	"

NOTE: All dimensions and weights shown are nominal.

Table 23
Type I Aluminum Alloy Anodes - Standard Sizes
for Offshore Use

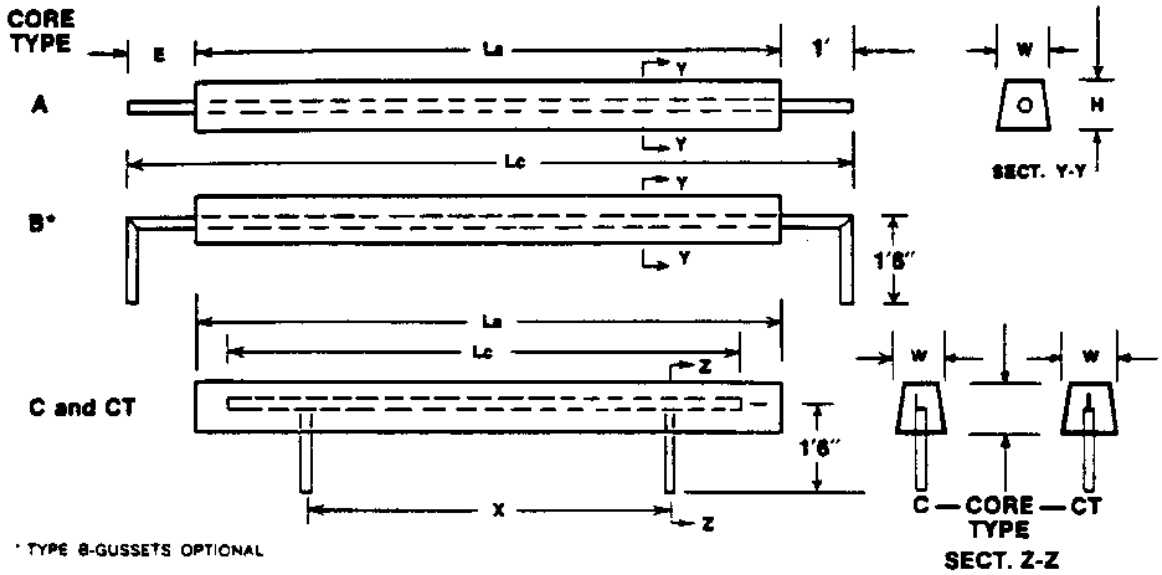

Anode No.	Net Al Wt.	WxH	La	Lc	X	Steel Core		
						Type	Schedule	
A 375	325	6-1/2" x 6-1/2"	8'	10'	-	A	2" schedule 80 pipe	
A 875	725	9-1/2" x 9-1/2"	8'	10'	-	A	4" schedule 80 pipe	
B 385	325	6-1/2" x 6-1/2"	8'	10'	-	B	2" schedule 80 pipe	
B 910	725	9-1/2" x 9-1/2"	8'	10'	-	B	4" schedule 80 pipe	
							Internal	Legs-Pipe
C 360	325	6-1/2" x 6"	8'	7'	5'	C	2" x 2" x 1/4" angle	2" schedule 80
C 405	370	6-1/2" x 6-1/2"	8'	7'	5'	C	2" x 2" x 1/4" angle	2" schedule 80
CT 840	725	9-1/2" x 8-1/2"	8'	7'	5'	CT	"T" 4" D. x 5-1/4" W. (ST4WF)	4" schedule 80

Table 24
Type III Aluminum Alloy Anodes for Offshore Use

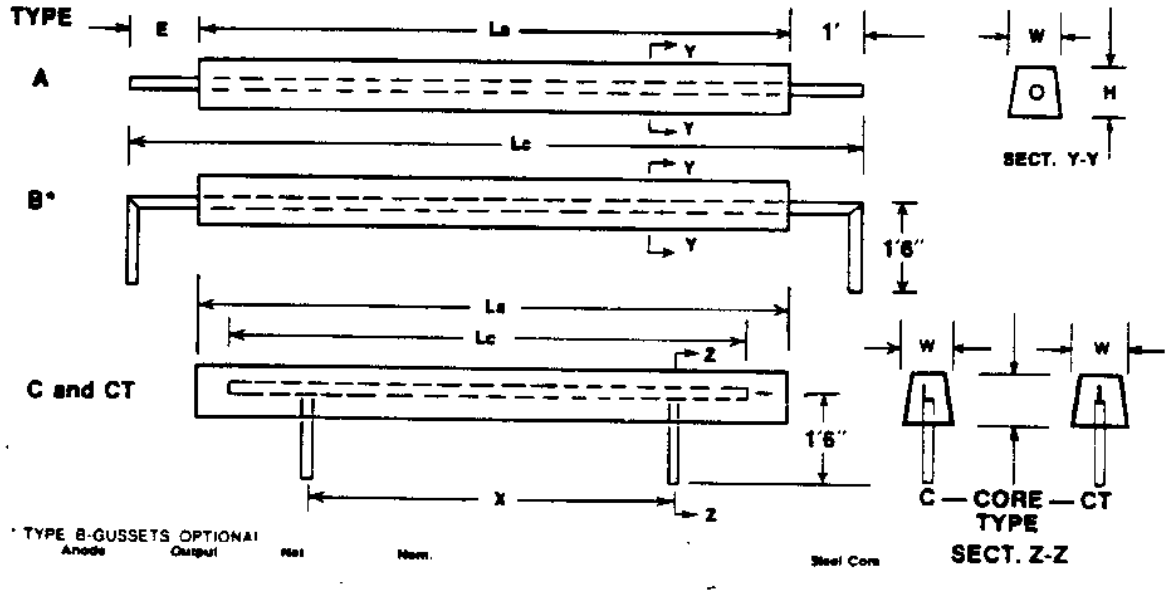

Anode No.	Output (amps)	Net Al Wt.	Nominal WxH	La	Lc	X	Steel Core		Legs-Pipe
							Type	Schedule	
A 420	4.75	365	8" x 8"	5'	7'		A	2-1/2" schedule 80	
B 442	4.75	365	8" x 8"	5'	7'	7'	B	2-1/3" schedule 80	
C 406	4.75	365	8" x 7-1/2"	5'	4'	2'	C	3" x 3" x 1/4"	2-1/2" schedule 80
A 469	5.33	408	8" x 7-1/2"	6'	8'		A	2-1/2" schedule 80	
B 492	5.33	408	8" x 7-1/2"	6'	8'	8'	B	2-1/2" schedule 80	
C 453	5.33	408	8" x 7"	6'	5'	3'	C	3" x 3" x 1/4"	2-1/2" schedule 80
A 519	5.90	450	8" x 7-1/2"	7'	9'		A	2-1/2" schedule 80	
B 542	5.90	450	8" x 7-1/2"	7'	9'	9'	B	2-1/2" schedule 80	
C 503	5.90	450	8" x 6-1/2"	7'	6'	4'	C	3" x 3" x 1/4"	2-1/2" schedule 80
A 567	6.45	490	8" x 7"	8'	10'		A	2-1/2" schedule 80	
B 590	6.45	490	8" x 7"	8'	10'	10'	B	2-1/2" schedule 80	
C 548	6.45	490	8" x 6-1/2"	8'	7'	5'	C	3" x 3" x 1/4"	2-1/2" schedule 80

Table 24 (continued)
Type III Aluminum Alloy Anodes for Offshore Use

Anode No.	Output (amps)	Net Al Wt.	Nominal HxW	La	Lc	X	Steel Core		Lugs-Pipe
							Type	Schedule	
A 700	7.0	535	8" x 7-1/2"	9'	11'		A	4" schedule 80	
B 745	7.0	535	8" x 7-1/2"	9'	11'	11'	B	4" schedule 80	
C 630	7.0	535	8" x 6-1/2"	9'	8'	6'	C	3" x 5" x 1/4"	4" schedule 80
A 752	7.5	572	8" x 7-1/2"	10'	12'		A	4" schedule 80	
B 797	7.5	572	8" x 7-1/2"	10'	12'	12'	B	4" schedule 80	
C 673	7.5	572	8" x 6"	10'	9'	7'	C	3" x 5" x 1/4"	4" schedule 80
A 809	8.0	614	8" x 7-1/2"	11'	13'		A	4" schedule 80	
B 854	8.0	614	8" x 7-1/2"	11'	13'	13'	B	4" schedule 80	
C 720	8.0	614	8" x 6"	11'	10'	8'	C	3" x 5" x 1/4"	4" schedule 80
A 930	5.4	825	12" x 12"	5'	7'		A	4" schedule 80	
B 975	5.4	825	12" x 12"	5'	7'	7'	B	4" schedule 80	
C 896	5.4	825	12" x 11"	5'	4'	2'	C	3" x 5" x 1/4"	4" schedule 80
A 1035	6.0	915	12" x 11"	6'	8'		A	4" schedule 80	
B 1080	6.0	915	12" x 11"	6'	8'	8'	B	4" schedule 80	
C 993	6.0	915	12" x 10-1/2"	6'	5'	3'	C	3" x 5" x 1/4"	4 " schedule 80
A 1135	6.5	1000	12" x 11"	7'	9'		A	4" schedule 80	
B 1180	6.5	1000	12" x 11"	7'	9'	9'	B	4" schedule 80	
C 1085	6.5	1000	12" x 10"	7'	6'	4'	C	3" x 5" x 1/4"	4" schedule 80
A 1288	7.0	1080	12" x 11"	8'	10'		A	5" schedule 80	
B 1350	7.0	1080	12" x 11"	8'	10'	10'	B	5" schedule 80	
C 1211	7.0	1080	12" x 9"	8'	7'	5'	C	3-1/2" x 6" x 5/16"	5" schedule 80
A 1409	7.75	1180	12" x 10"	9'	11'		A	5" schedule 80	
B 1471	7.75	1180	12" x 10"	9'	11'	11'	B	5" schedule 80	
C 1321	7.75	1180	12" x 9"	9'	8'	6'	C	3-1/2" x 6" x 5/16"	5" schedule 80
A 1509	8.25	1260	12" x 10"	10'	12'		A	5" schedule 80	
B 1572	8.25	1260	12" x 10"	10'	12'	12'	B	5" schedule 80	
C 1411	8.25	1260	12" x 9"	10'	9'	7'	C	3-1/2" x 6" x 5/16"	5" schedule 80
A 1618	8.8	1348	12" x 10"	11'	13'		A	5" schedule 80	
B 1680	8.8	1348	12" x 10"	11'	13'	13'	B	5" schedule 80	
C 1508	8.8	1348	12" x 9"	11'	10'	8'	C	3-1/2" x 6" x 5/16"	5" schedule 80

Table 25
Aluminum Alloy Hull Anodes - Standard Sizes
(Types I, II, and III)

CAT. NO.
G-1-29H

WT./ANODE
29 lbs.

NOM. DIMENSIONS
24" x 5" x 2½"

CURRENT RATING
4 AMPERE–YEARS

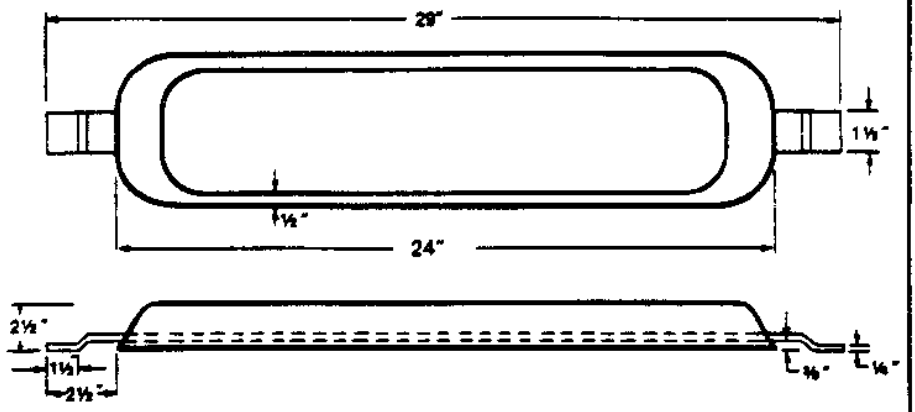

CAT. NO.
G-1-23H

WT./ANODE
23 lbs.

NOM. DIMENSIONS
24" x 5" x 1¾"

CURRENT RATING
3 AMPERE–YEARS

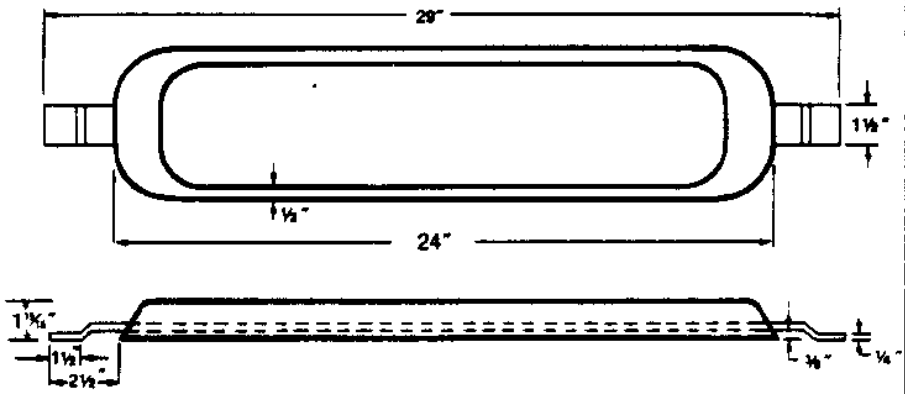

CAT. NO.
G-2-15H

WT./ANODE
15½ lbs.

NOM. DIMENSIONS
21½" x 5" x 1⅜"

CURRENT RATING
2 AMPERE–YEARS

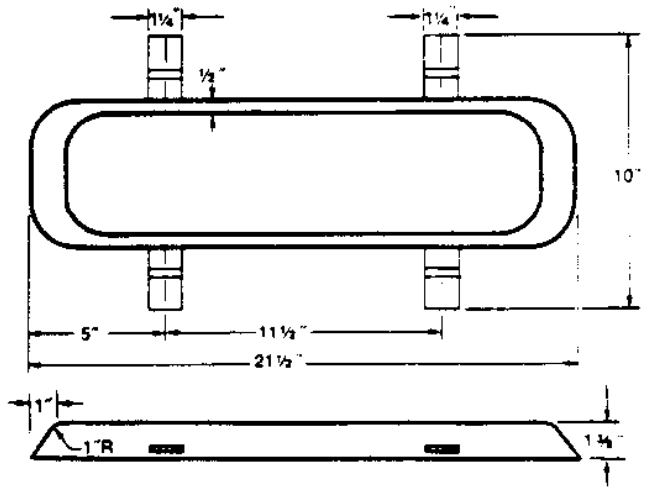

Note: Also available: G-1-15H same as G-2-15H except has single longitudinal strap

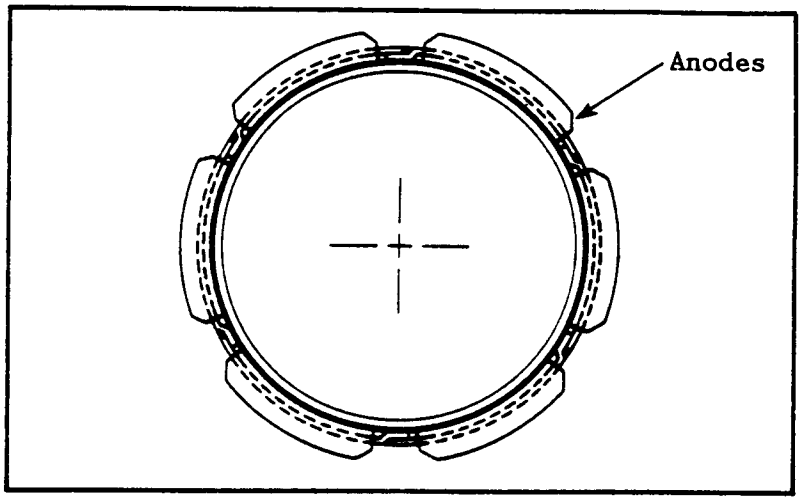

Figure 74
Aluminum Alloy Bracelet Anodes

Table 26
Aluminum Alloy Bracelet Anode - Standard Sizes

NUMBER OF SEGMENTS	NOMINAL PIPE DIAMETER (in.)
4	20 - 36
4 or 6	30 - 36
6	30 - 54
6 or 8	40 - 54
8	40 - 72

The maximum arc length of each segment ranges from about 14 inches to about 27 inches.

Each segment has embedded in it as least one circumferentially oriented steel core.

7.9.1.1 Determination of Connecting Wire Size and Type. As the currents in sacrificial anode cathodic protection systems are usually quite low, the size of conductors is normally more a function of mechanical strength than of resistance. In systems where sacrificial anodes are used as distributed anodes along the protected structure and are connected to a collector wire, the collector wire size should be No. 10 AWG. No. 12 AWG wire is the minimum size that should be used on individual anodes.

As connecting wires in sacrificial anode cathodic protection systems are themselves cathodically protected, insulation is not as critical as in portions of impressed current cathodic protection systems. Type TW, Type RHW-USE, or polyethylene insulation may be used. Anode lead wires should never be used to suspend, carry, or install the anode. Anode cables are commonly No. 12 AWG with Type TW insulation. Unless otherwise necessary, other connecting wires should be No. 12 AWG solid copper for single anodes.

When currents larger than 1 A flow in any portion of a sacrificial anode circuit, the most economic wire size should be determined using the methods outlined in para. 6.7.1.4. Instead of the cost of power used in the determination of economic wire size for impressed current cathodic protection systems, the cost of additional anodes to overcome the resistive losses should equal the annual fixed costs for the cable size being analyzed.

7.9.2 Connections and Splices. Wire splices and connections (refer to para. 6.7.2) should be kept to an absolute minimum and the type of connection used should have both low resistance, high reliability, and good resistance to corrosion. Connections should be made using either exothermic or mechanical connections (refer to para. 10.6). Insulation of underground connections should be made by using encapsulation in epoxy or insulation with hot coal-tar enamel followed by wrapping with pipeline felt. Above grade connections, such as in test stations, are usually mechanical connections and should be carefully taped in order to prevent corrosion due to the entry of moisture.

a) The following connections are required for sacrificial anode systems:

(1) Connection between anode(s) and structure.

(2) Connection between cable and anode (usually factory made or connection is attached to cast-in-core)

(3) Necessary bonds and test wires

The need for additional connections and splices should be carefully evaluated. As in the case for impressed current systems, the location of all necessary splices and connections should be specifically shown on the design drawings. The need for additional splices and connections should be determined by the designer of the system and not left to the discretion of the installer.

7.9.3 Bonds and Insulating Joints. Bonds and insulating joints are required for some sacrificial anode cathodic protection systems. Guidelines presented in paras. 6.7.4. and 6.7.5 should be used for all bonds and insulating joints.

7.9.4 Test Station Location and Function. The most common type of test station used in sacrificial anode cathodic protection systems is the current-potential test station shown in Figure 75. In this test station, the anode lead wire is connected to the structure lead using a 0.01-ohm resistor (shunt) which is used to measure the current output by measuring the voltage drop across the shunt. The second structure lead is used to measure the structure potential using a noncurrent carrying connection thus eliminating any potential drop along the conductor. The second structure connection can also

be used as a spare if the primary structure connection is damaged. Test stations for sacrificial anode cathodic protection systems can either be the flushmounted or above grade type as described in para. 6.7.3. If flush-mounted test stations are used, the soil exposed in the bottom of t test station can be used to measure the structure-to-electrolyte potentia Location of such test stations directly over the structure is often advantageous as any IR drops due to current flowing through the soil are minimized. Other test stations used in sacrificial anode cathodic protection systems are: the potential test station, the soil contact tes station, the line current (IR Drop) test station, the insulating joint te station, the casing insulation test station, and the bond test station. These test stations are identical to those described in para. 6.7.3.

7.9.5 Backfill. The use of backfill in soil applications for the ty of anode materials used in sacrificial anode cathodic protection systems described in the section on each anode material. When prepackaged anodes are used, the impermeable wrapping must be removed from these anodes prio to installation.

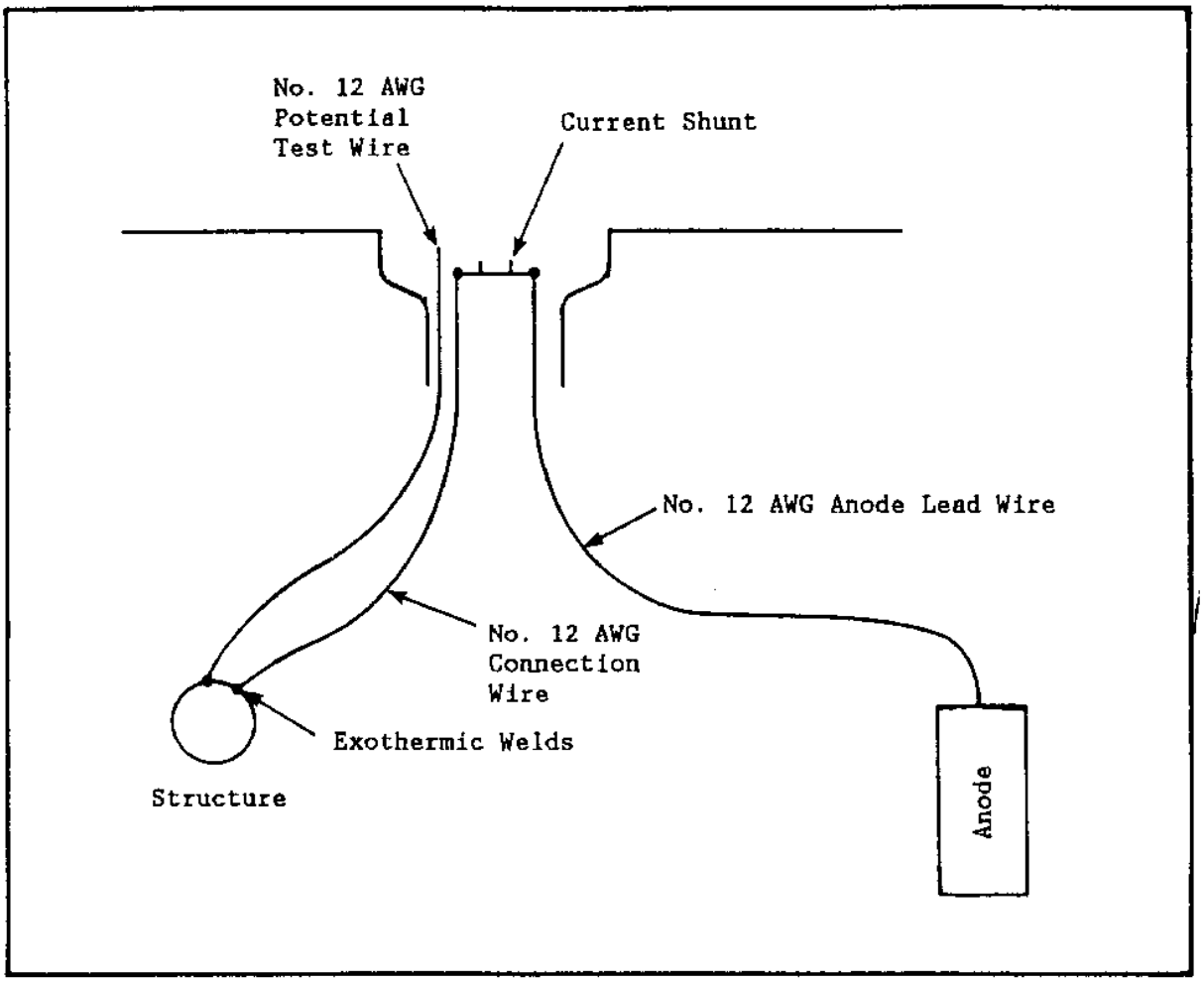

Figure 75
Current-Potential Test Station

Section 8: TYPICAL CATHODIC PROTECTION SYSTEMS

8.1 Diagrams of Cathodic Protection Systems. In Figures 76 through 96, typical cathodic protection system installations are shown. Features of these designs may be applicable to the design of similar systems with similar applications.

Note: The design for each specific application must be made based upon actual conditions and requirements. Section 9 provides analytical examples of the designs of sample cathodic protection systems.

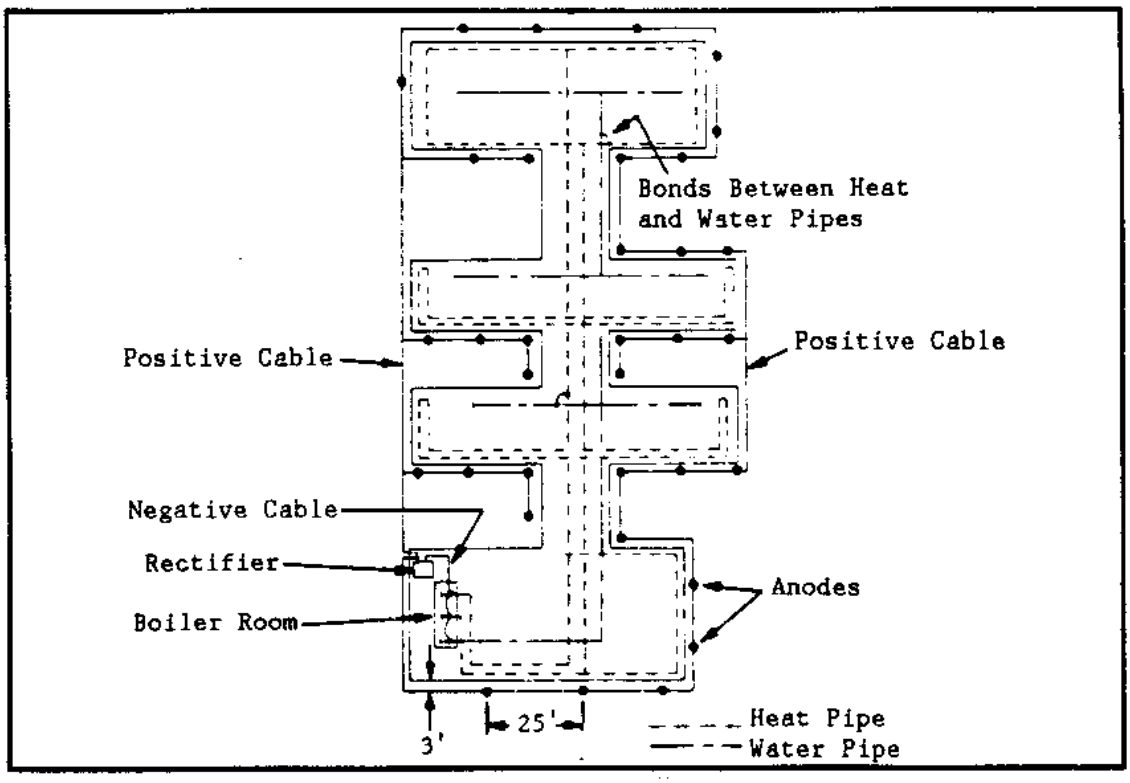

Figure 76
Typical Building Underground Heat and Water Lines

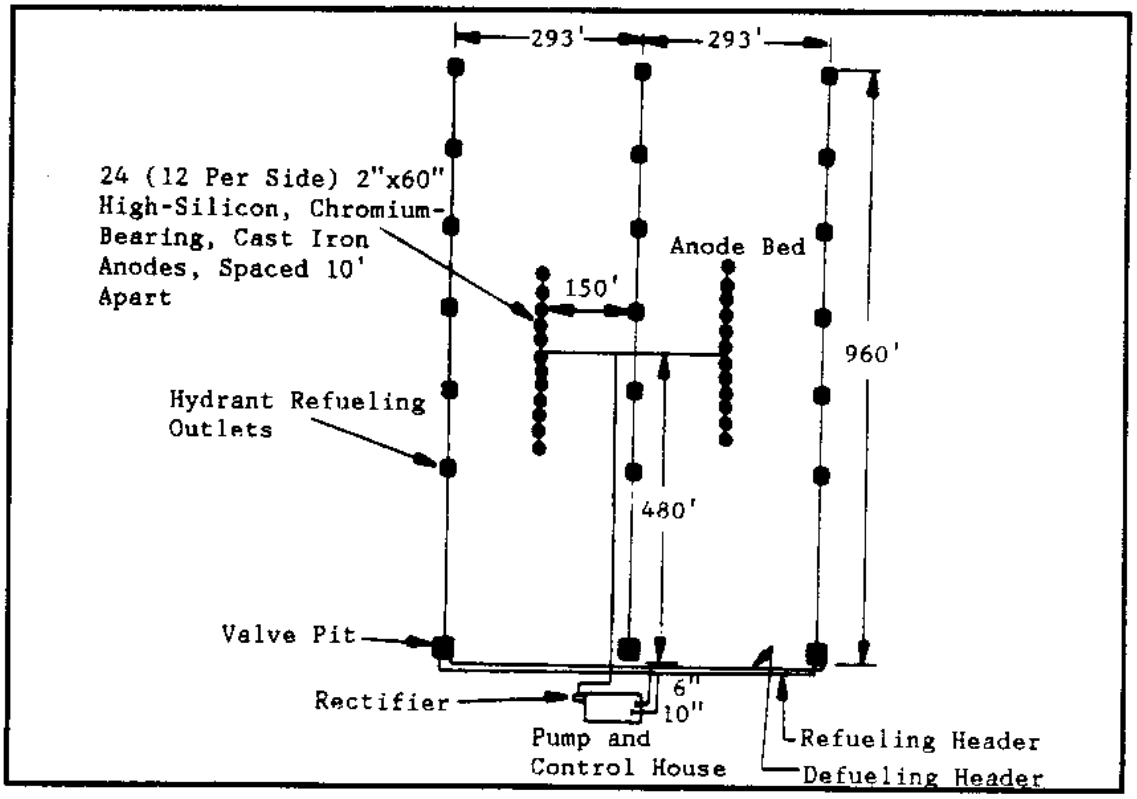

Figure 77
Impressed Current Point Type Cathodic Protection
for Aircraft Hydrant Refueling System

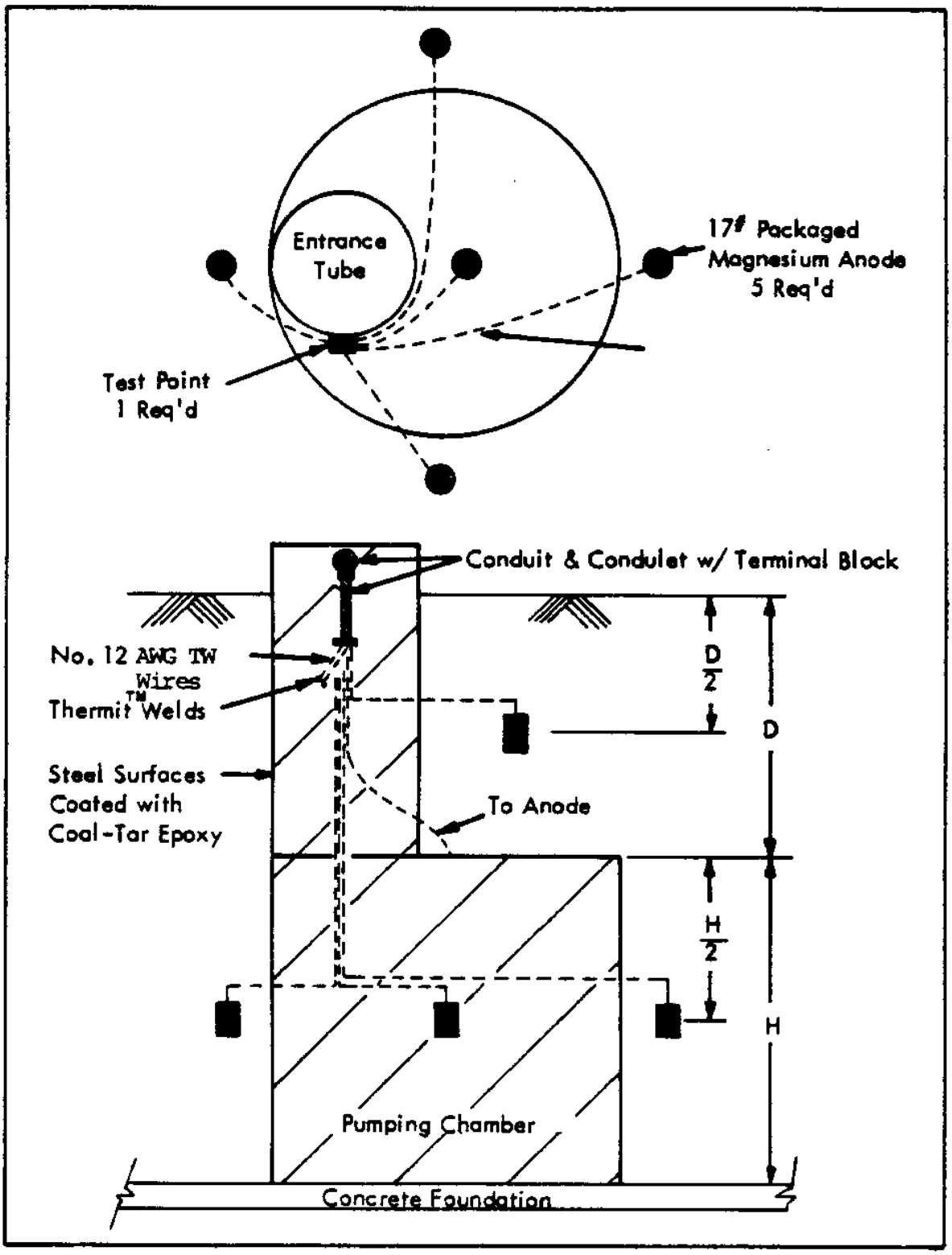

Figure 78
Galvanic Anode Type Cathodic Protection for Coated Underground Sewage Lift Station

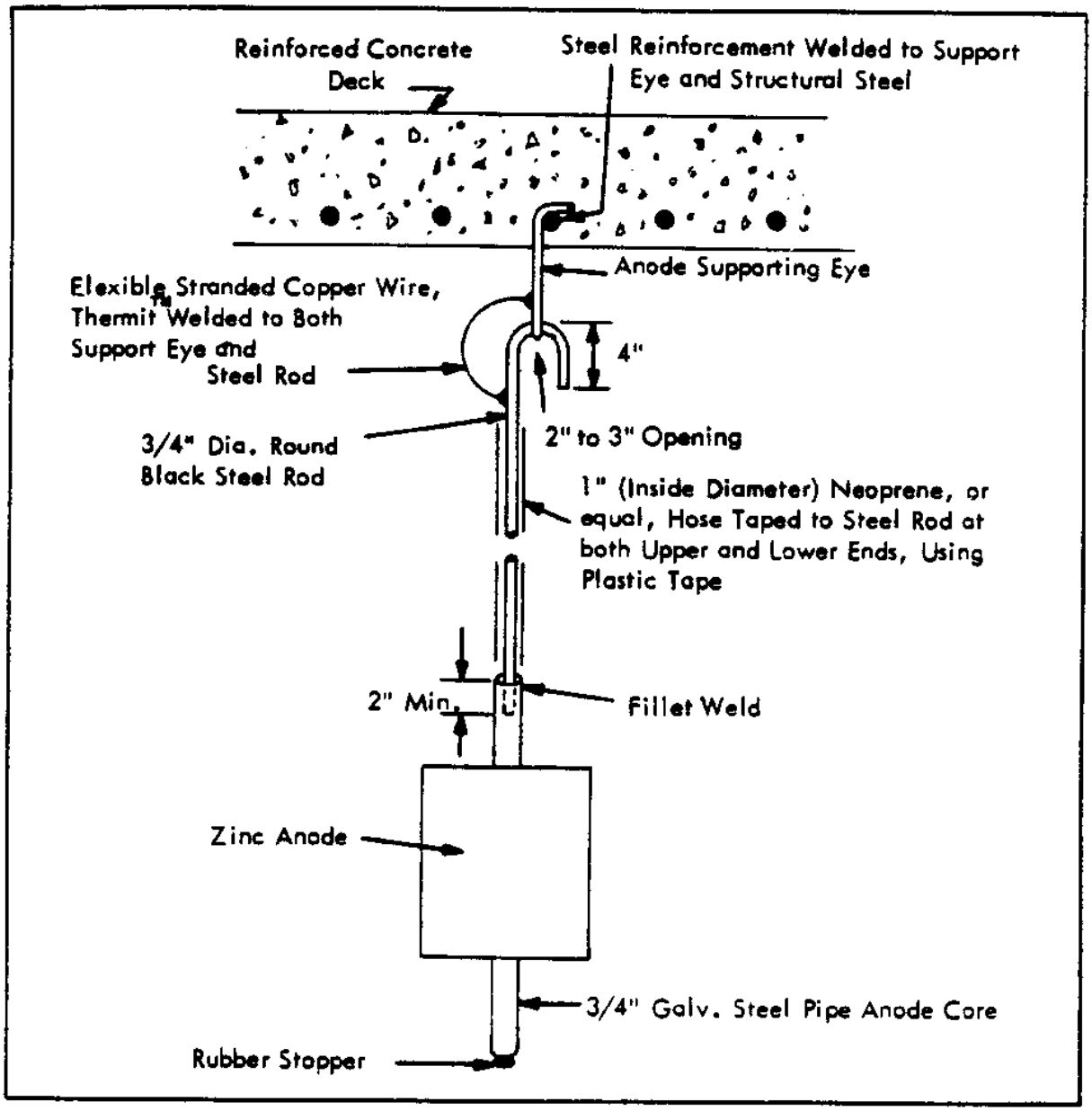

Figure 79
Zinc Anode on Reinforced Concrete Block

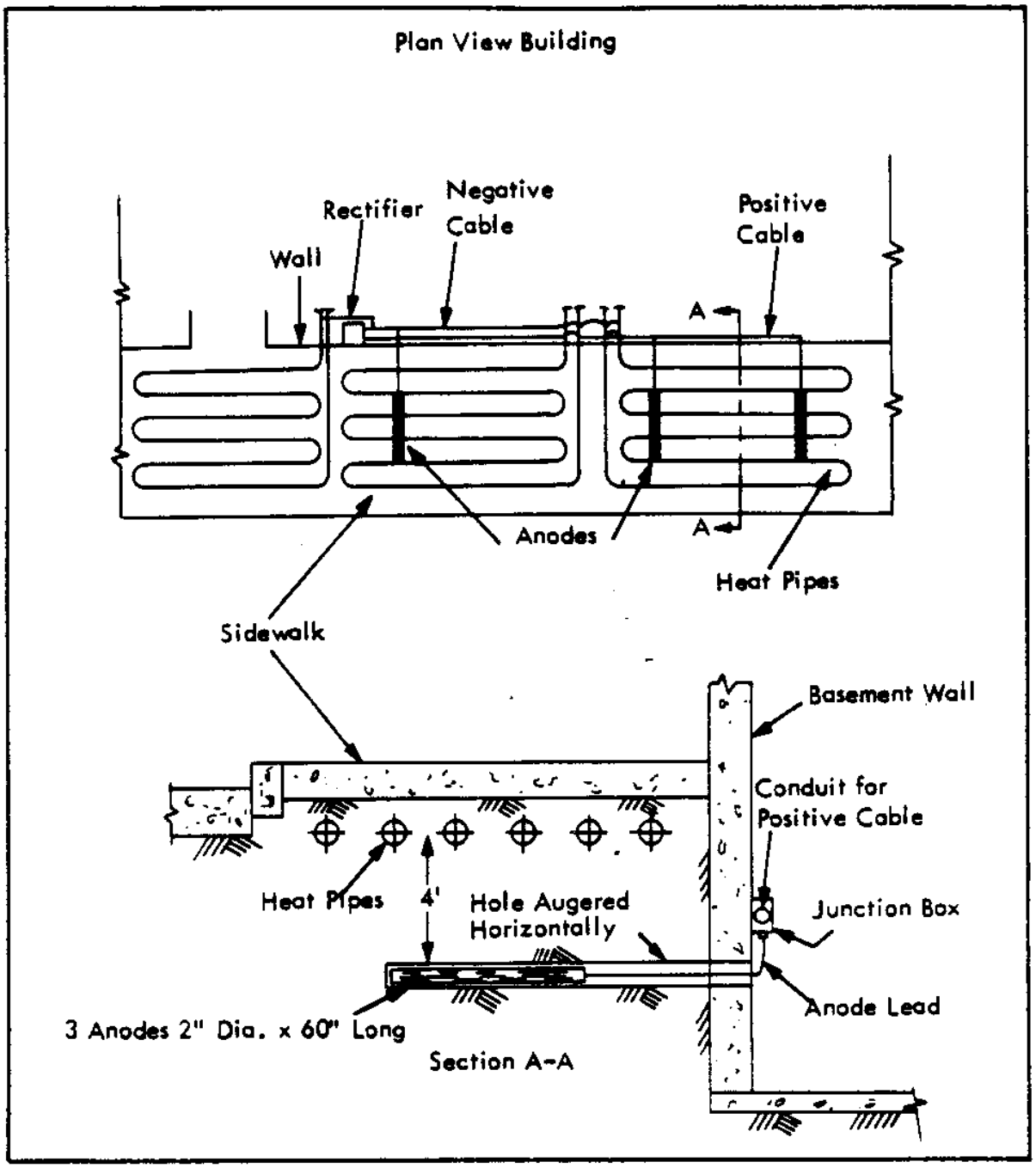

Figure 80
Radiant Heat or Snow-Melting Piping

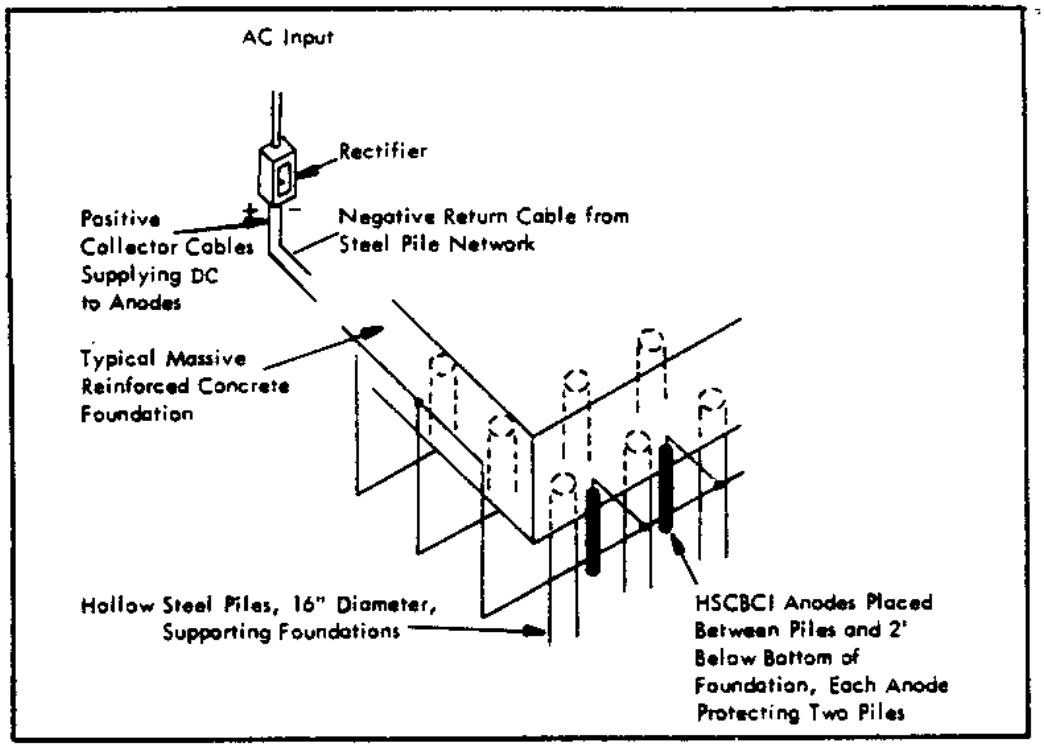

Figure 81
Cathodic Protection of Foundation Piles

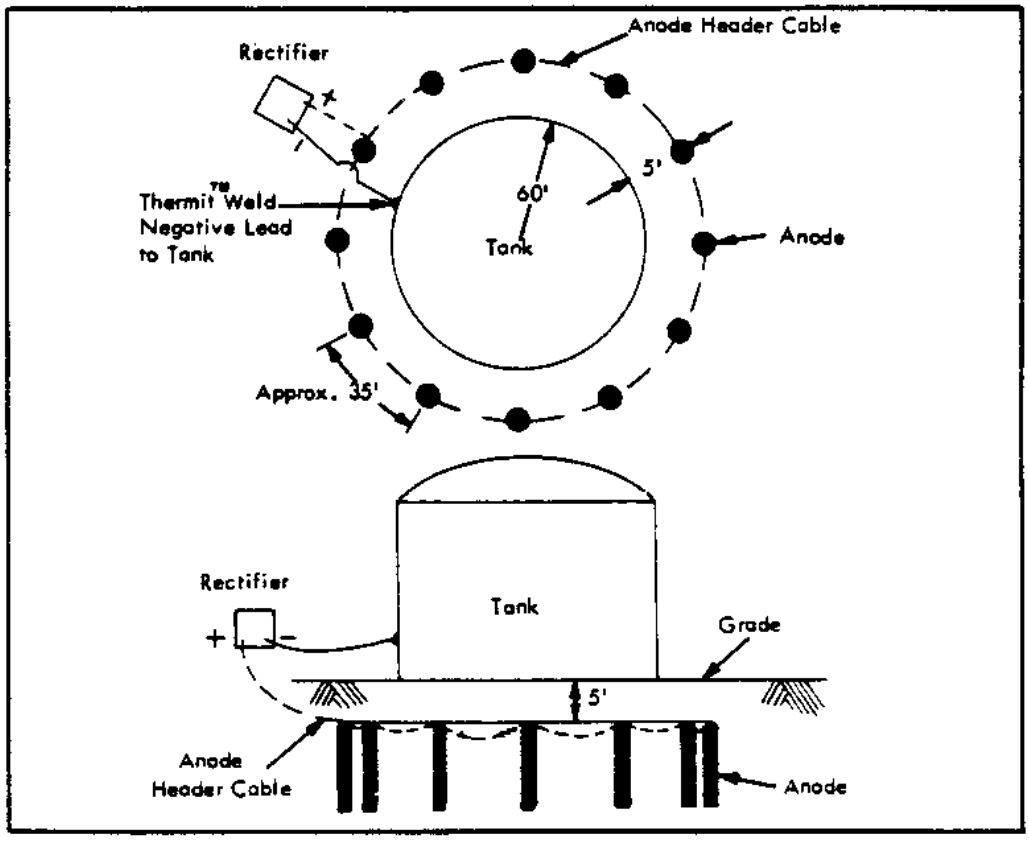

Figure 82
Impressed Current Cathodic Protection for Existing On-Grade Storage Tank

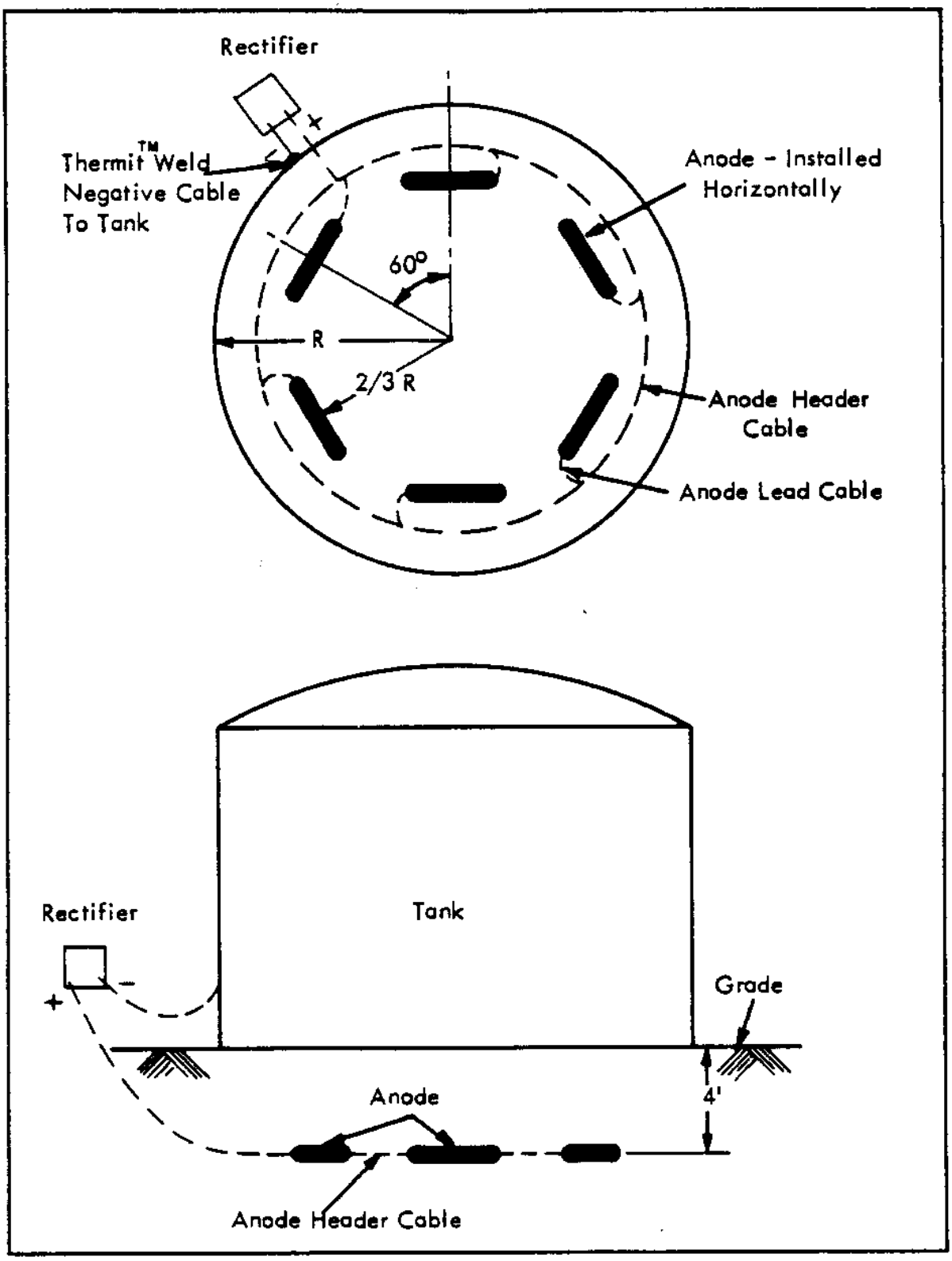

Figure 83
Impressed Current Cathodic Protection with Horizontal
Anodes for On-Grade Storage Tank - New Installation

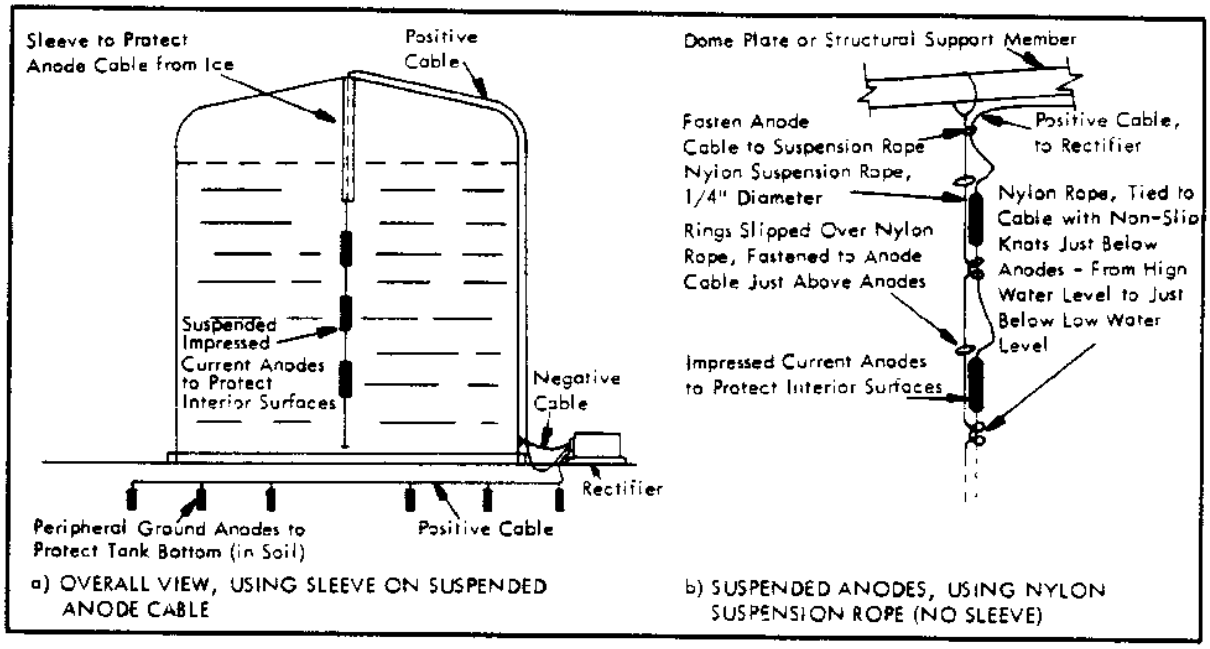

Figure 84
On-Grade Fresh Water Tank Using Suspended Anodes

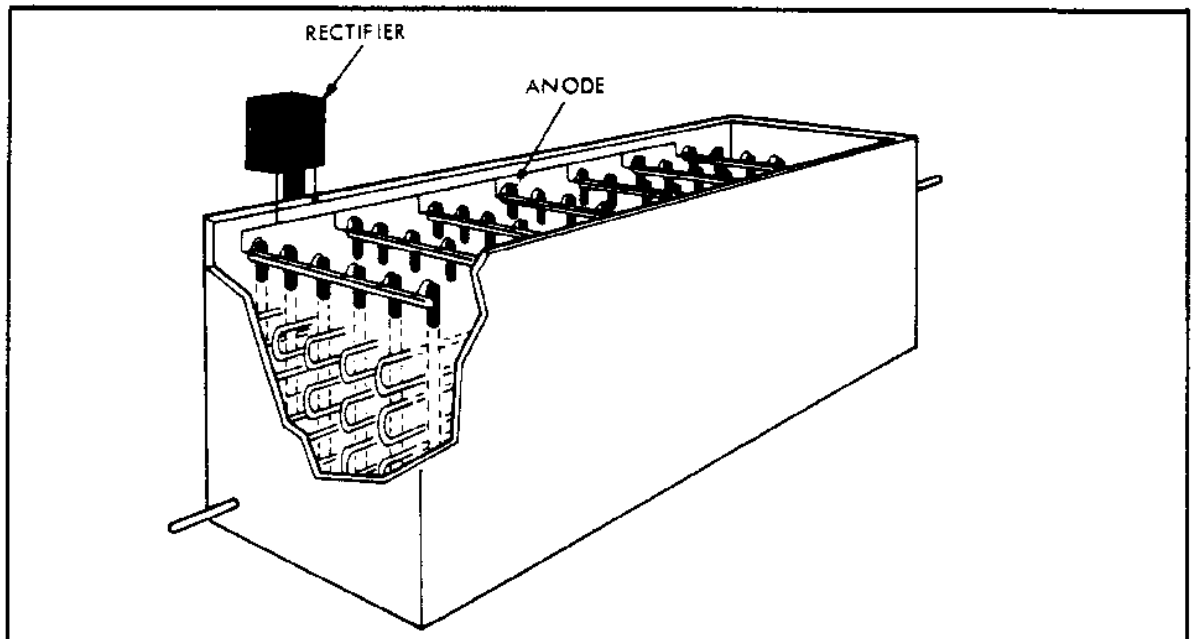

These units are widely used for cooling purposes, often in refineries. Corrosion conditions are very aggressive. Space is limited between coils, and anodes 1-1/2 in. dia. x 60 in. long have been successfully used. They can be joined together to produce lengths 7-1/2 feet long.

Figure 85
Open Water Box Cooler

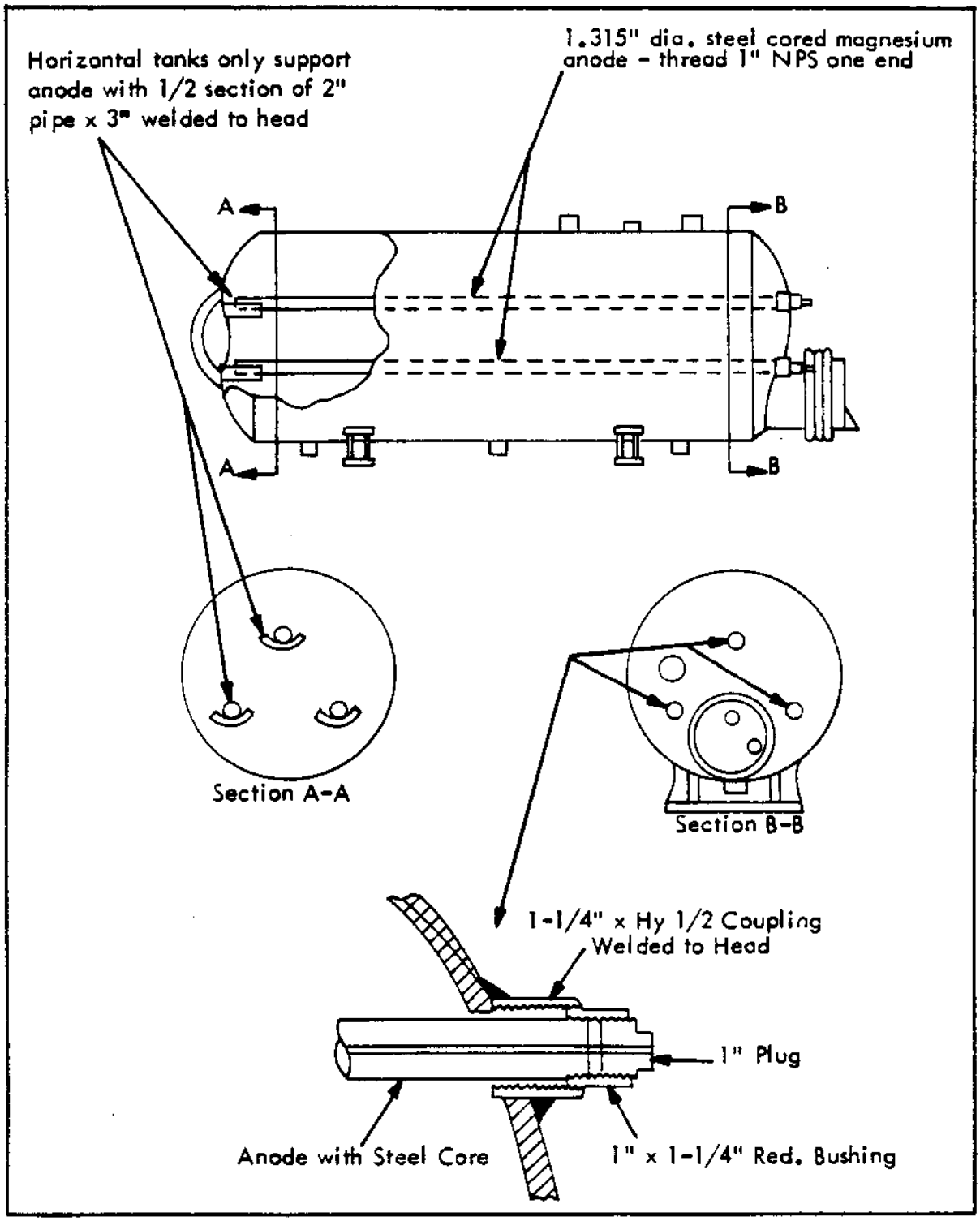

Figure 86
Horizontal Hot Water Tank - Magnesium Anode Installation

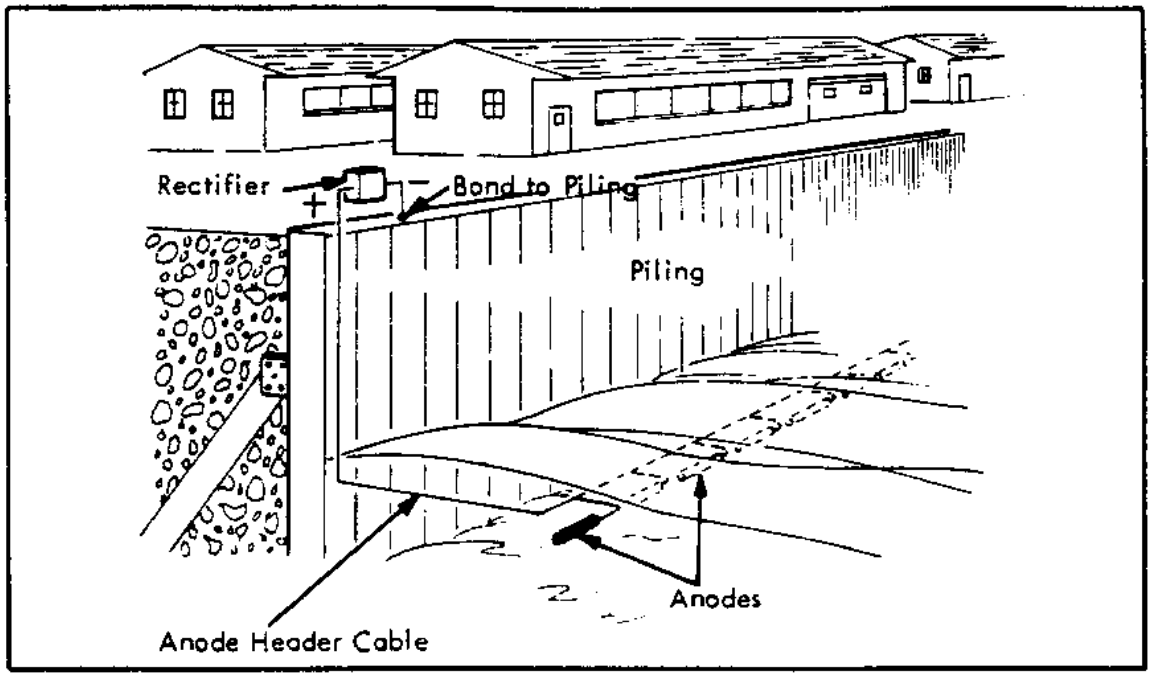

Figure 87
Impressed Current Cathodic Protection System for Sheet Piling for Wharf Construction

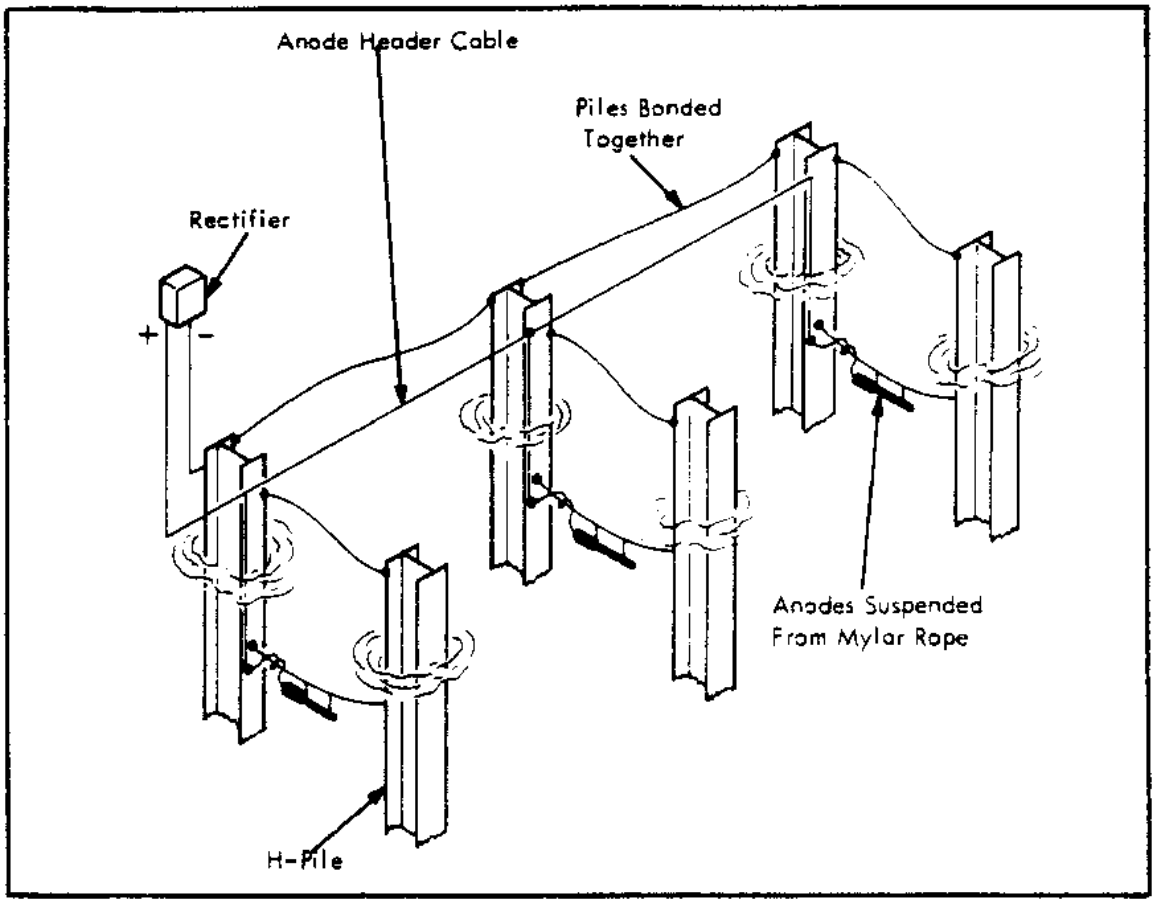

Figure 88
Suspended Anode Cathodic Protection for H-Piling in Seawater

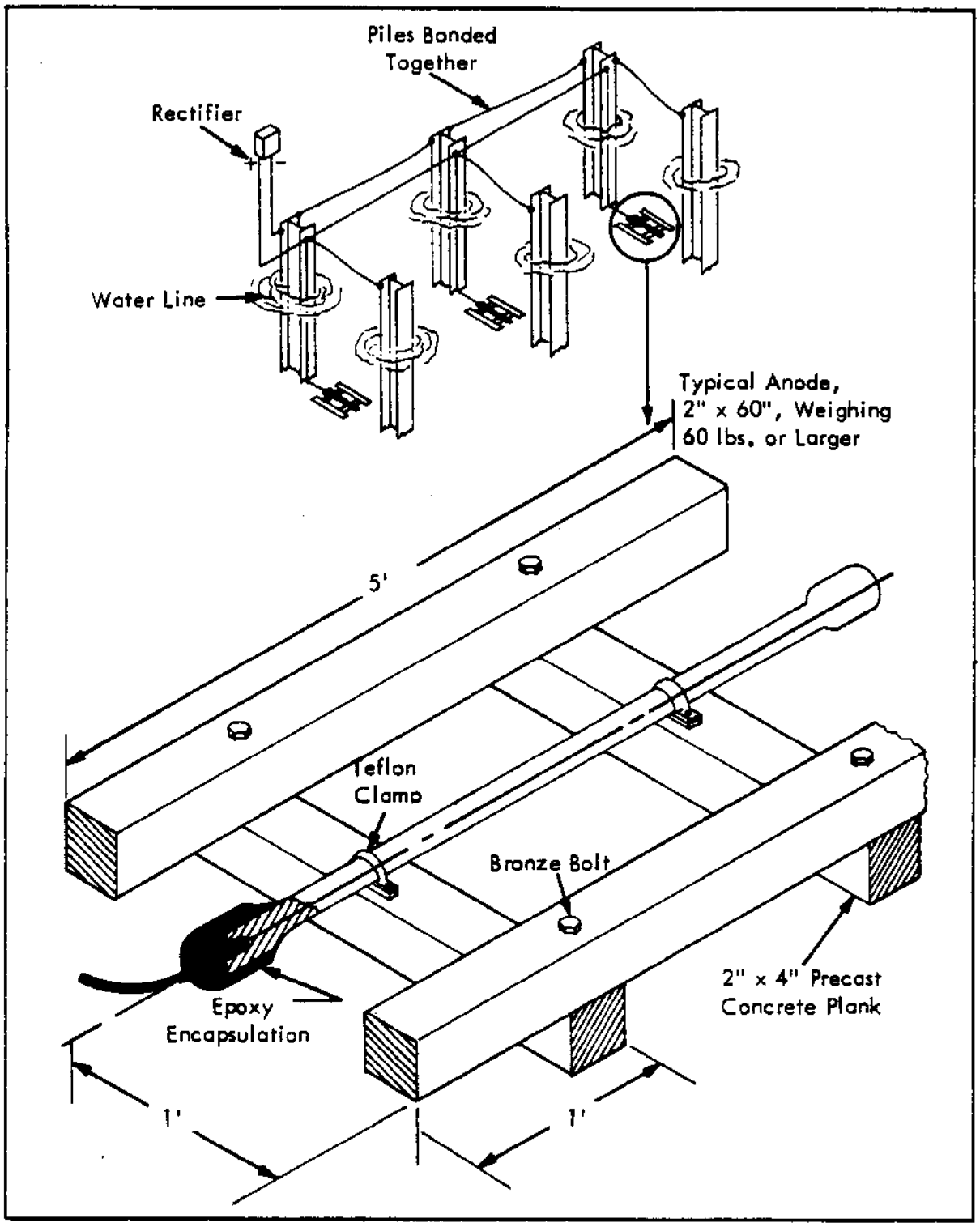

Figure 89
Cathodic Protection for H-Piling in Seawater

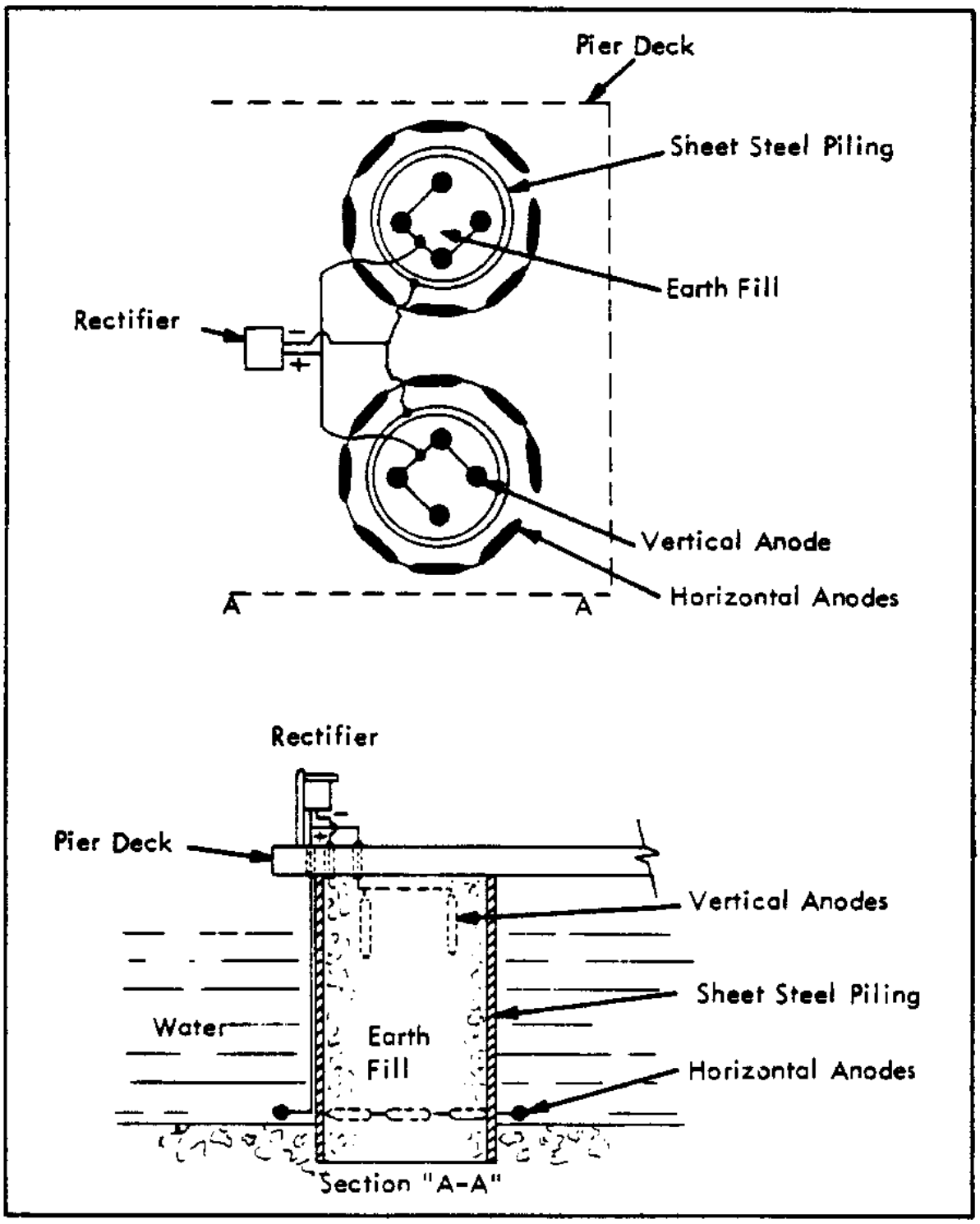

Figure 90
Cellular Earth Fill Pier Supports

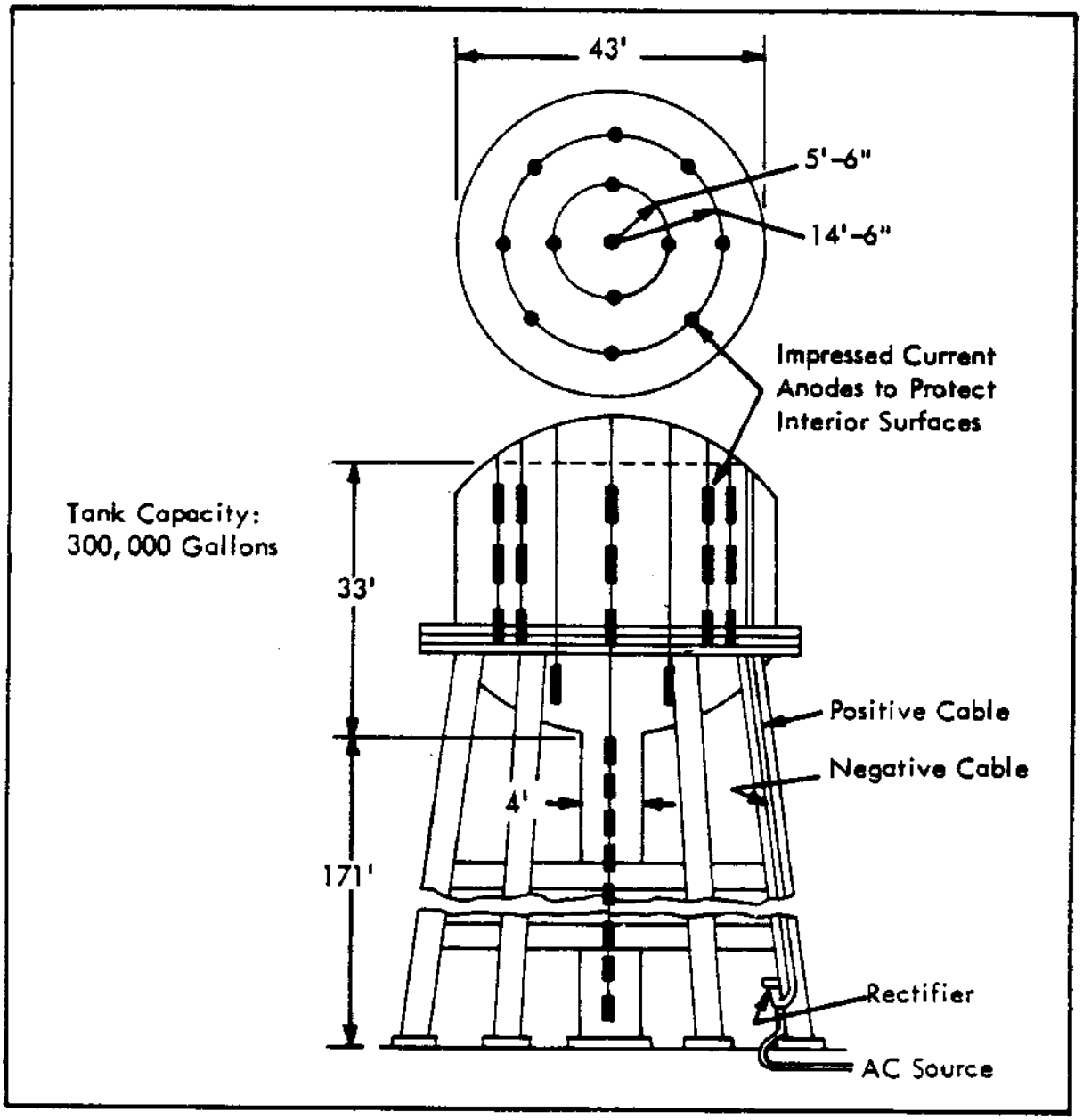

Figure 91
Elevated Fresh Water Tank Using Suspended Anodes

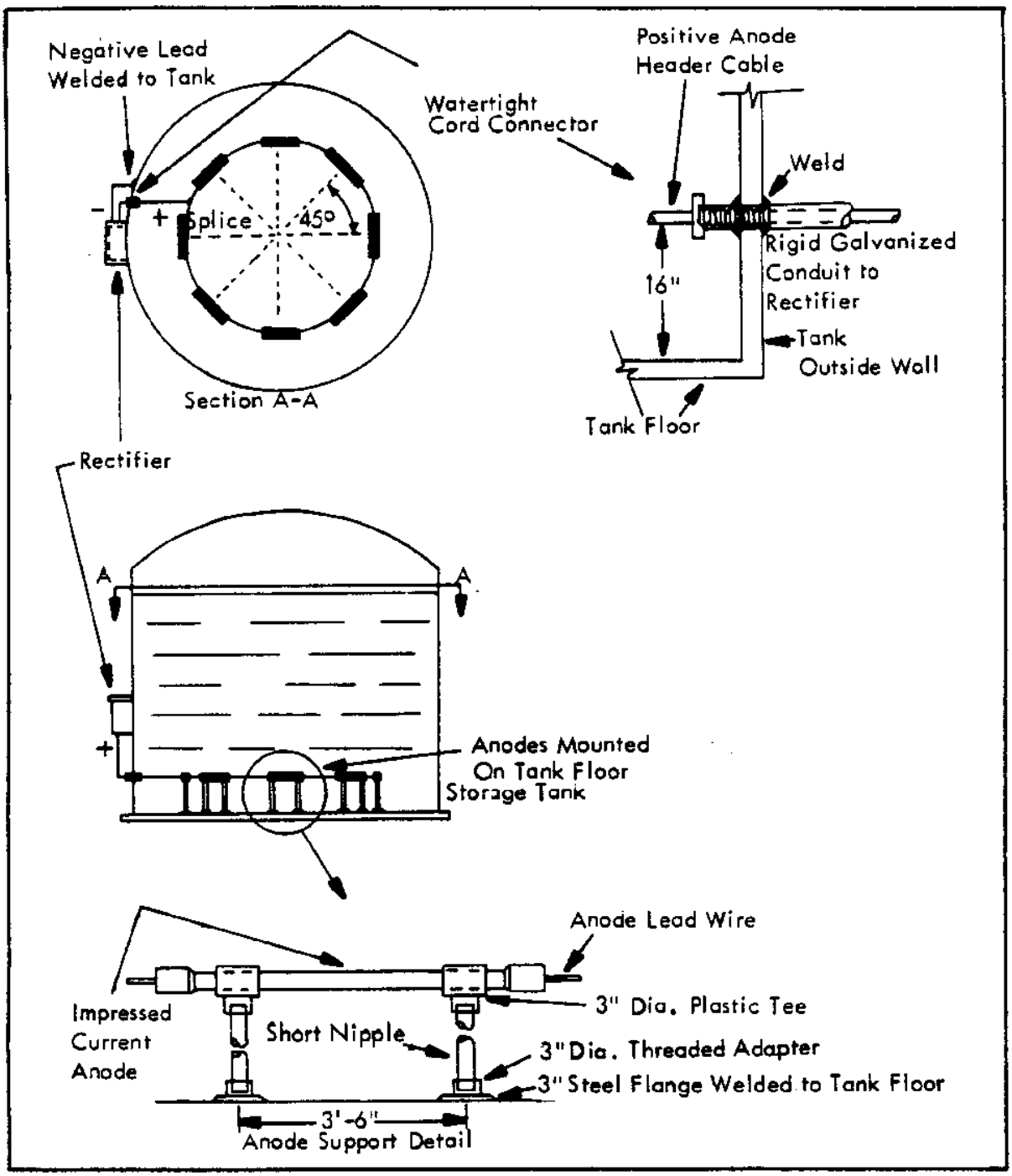

Figure 92
Cathodic Protection of Tanks using Rigid
Floor-Mounted Anodes

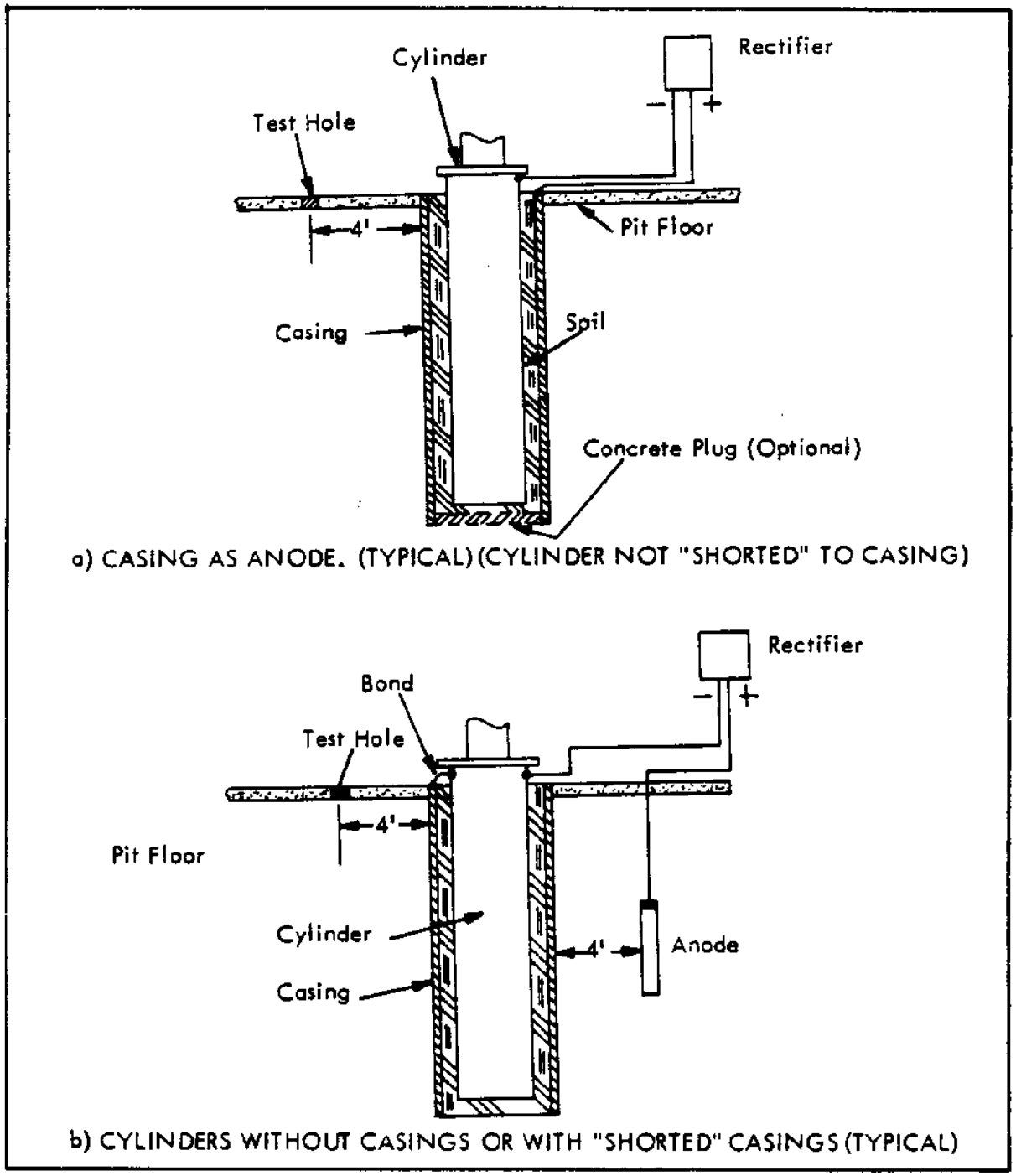

Figure 93
Cathodic Protection of Hydraulic Elevator Cylinders

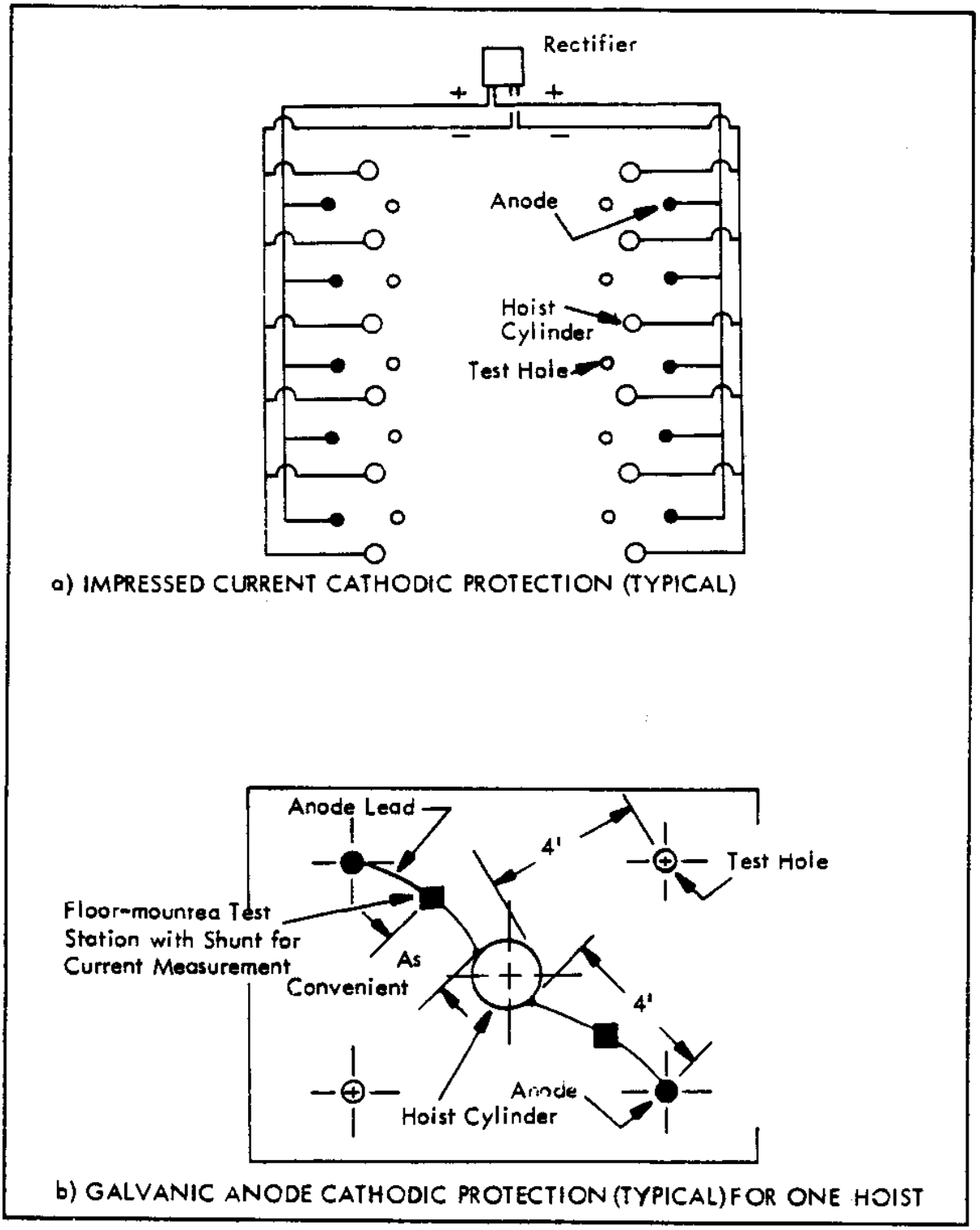

Figure 94
Hydraulic Hoist Cylinder

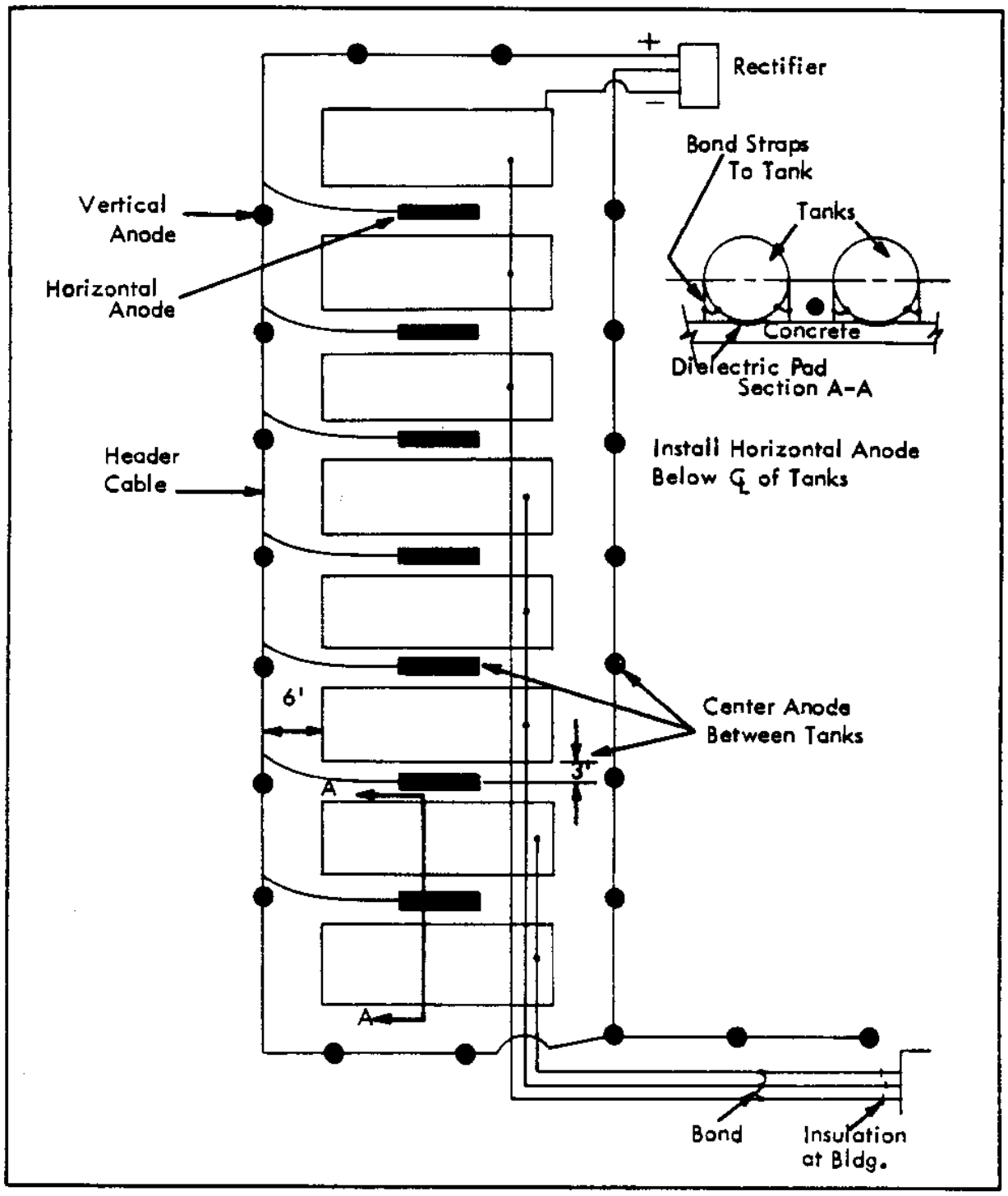

Figure 95
Typical Cathodic Protection of Underground Tank Farm

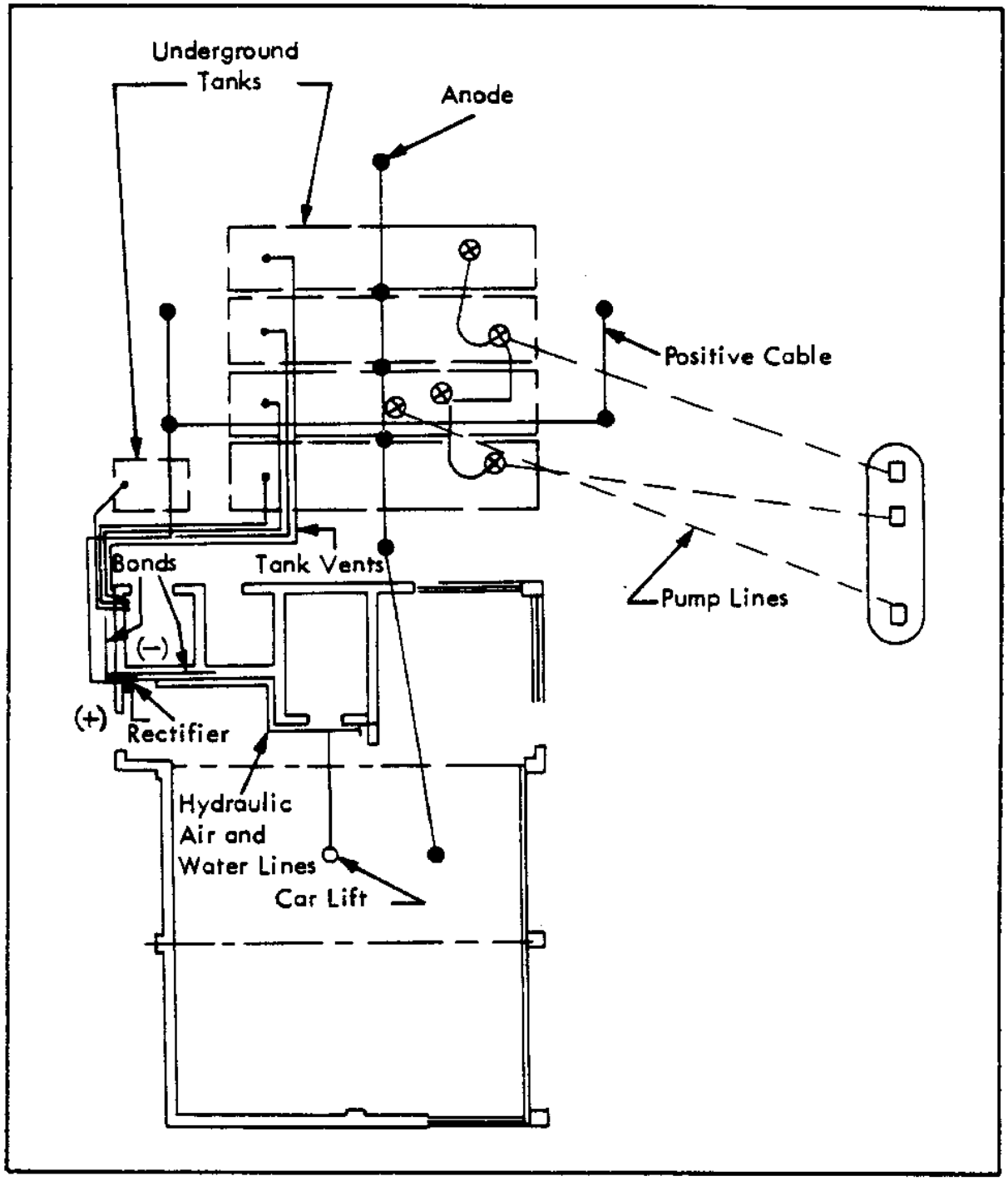

Figure 96
Gasoline Service Station System

Section 9: CATHODIC PROTECTION SYSTEM DESIGN EXAMPLES

9.1 Introduction. The following examples illustrate the application of the design principles outlined in Sections 4, 6, and 7. They are intended to illustrate the design methods to be used and are not standard designs. In these examples, interference to or from foreign structures is not considered. In practice, the design should be based upon field measurements whenever possible and not on calculated estimates. In some examples, more detailed and rigorous calculations than actually required are presented for illustrative purposes. Shorter, more simplified calculations would give equally applicable estimates, but should only be used once the basic concept of the process is understood. It must be remembered that all cathodic protection system designs make many assumptions, such as uniform environmental resistivity, which may or may not prove to be true. When the system is installed, it will require adjustment and possible modification in order for effective protection to be achieved. In congested areas, interference problems are often difficult to correct and optimum levels of protection may not be practically achieved. In such cases, cathodic protection will reduce the incidence and degree of corrosion damage but corrosion may not be entirely eliminated.

Twelve examples are provided:

a) Elevated steel water tank.

b) Elevated steel water tank where ice is expected.

c) Steel gas main.

d) Natural gas distribution system.

e) Hot water storage tank.

f) Underground steel storage tank.

g) Steam heat distribution system.

h) Aircraft multiple hydrant refueling system.

i) Steel sheet piling in seawater (galvanic anodes).

j) Steel sheet piling in seawater (impressed current).

k) Steel H piling in seawater (galvanic anodes).

l) Steel H piling in seawater (impressed current).

9.2 Elevated Steel Water Tank. This impressed current design is for a tank that has not been built; hence, it is not possible to determine current requirements, etc., by actual measurement. Calculated estimates are used.

9.2.1 Design Data

a) Tank capacity - 500,000 gallons

b) Tank height (from ground to bottom of bowl) - 115 feet

c) Diameter of tank - 56 feet

d) High water level in tank - 35 feet

e) Overall depth of tank - 39 feet

f) Vertical shell height - 11 feet

g) Riser pipe diameter - 5 feet

h) Shape of tank - Ellipsoidal, both top and bottom

i) All internal surfaces are uncoated

j) Design for maximum current density - 2 mA/ft²

k) Electric power available 120/240 V ac, single-phase

l) String-type HSCBCI anodes are used

m) Design life - 10 years

n) Water resistivity - 4,000 ohm-cm

o) Tank water must not be subject to freezing

p) Assumed deterioration rate - 1.0 lbs/A yr

q) Anode efficiency (assumed) - 50 percent

9.2.2 Computations

a) Area of wetted surface of tank bowl (see Figure 97):

(1) Top section (T):

$$A_T = 2\ B\ rx \text{ (approximate)}$$

where

$$r = 28 \text{ feet (radius of tank)}$$
$$x = 10 \text{ feet}$$
$$A_T = 2 \times 3.1416 \times 28 \times 10 \text{ ft}^2$$
$$A_T = 1759 \text{ ft}^2$$

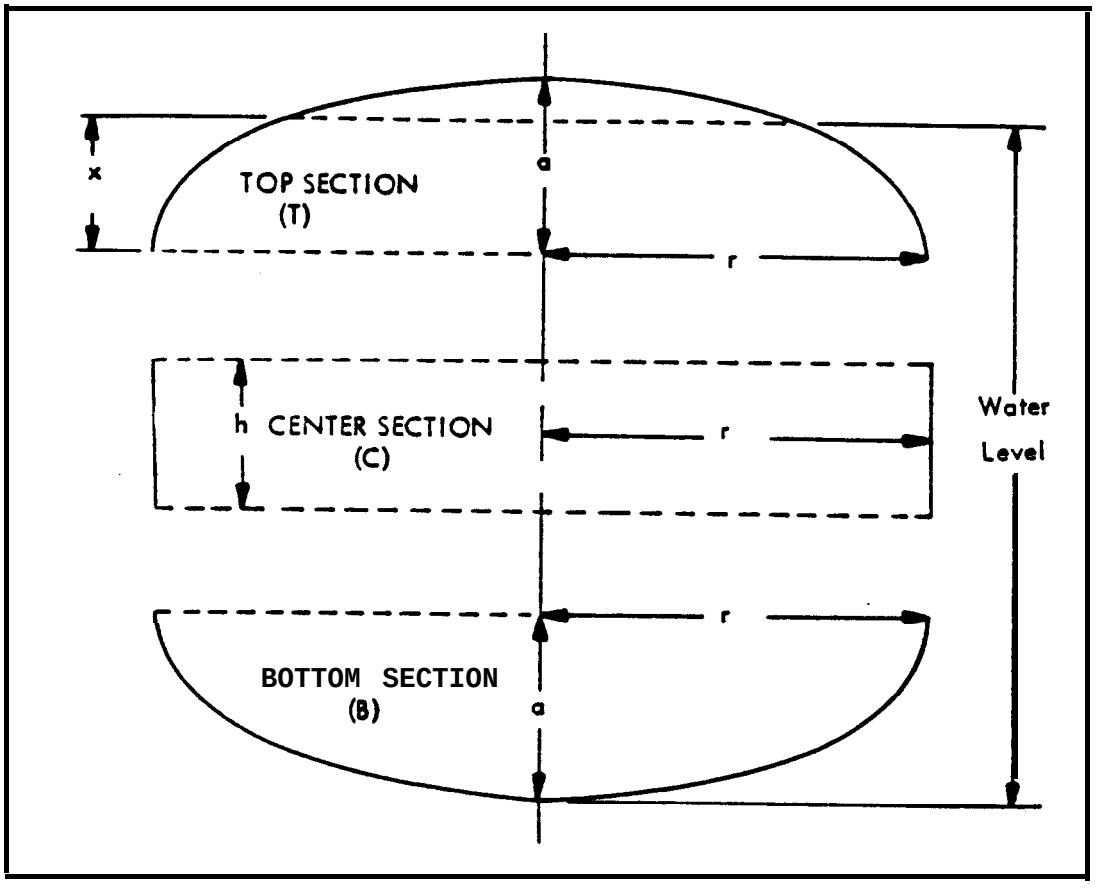

Figure 97
Segmented Elevated Tank for Area Calculations

(2) Center section (C):

$$A_c = 2 \pi rh$$

where

r = 28 feet (radius of tank)

h = 11 feet

$A_c = 2 \times 3.1416 \times 28 \times 11 \text{ ft}^2$

$A_c = 1{,}935 \text{ ft}^2$

(3) Bottom section (B):

$$A_B = \sqrt{2}\ \pi\ r \sqrt{a^2 + r^2}$$

where

r = 28 feet (radius of tank)

a = 14 feet

$A_B = \sqrt{2} \times 3.1416 \times 28 \times \sqrt{14^2 + 28^2}$

$A_B = 3{,}894\ ft^2$

(4) Therefore:

$A_T = 1{,}759\ ft^2$

$A_C = 1{,}935\ ft^2$

$A_B = 3{,}894\ ft^2$

(5) Total = 7,588 ft^2 (wetted area of tank bowl).

b) Area of riser pipe:

$A_R = 2Br_R\ h_R$

where

r_R = 2.5 feet (radius of riser)

h_R = 115 feet (height of riser)

A_R = 2 x 3.1416 x 2.5 feet x 115 feet

$A_R = 1{,}806\ ft^2$

c) Maximum design current for tank:

$I_T = 2.0\ mA/ft^2 \times 7{,}588\ ft^2$

I_T = 15,176 mA or 15.2 A

d) Maximum design current for riser:

$I_R = 2.0\ mA/ft^2 \times 1{,}806\ ft^2$

I_R = 3,612 mA or 3.6 A

e) Minimum weight of tank anode material:

W = YSI/E

where

W = weight of anode material

Y = design life
S = anode deterioration rate
I = maximum design current
E = anode efficiency

where

Y = 10 years
S = 1.0 lbs/A yr
E = 0.50
I = 15.2 A
W = 10 x 1.0 x 15.2/0.50 lb
W = 304 pounds

f) Minimum weight of riser anode material:

W = YSI/E

where

Y = 10 years
S = 1.0 lbs/A yr
I = 3.62 A
E = 0.50
W = 10 x 1.0 x 3.62/0.50 lb
W = 72.4 lb

g) Radius of main anode circle:

r = (DN)/2(B+N)

where

D = 56 feet
N = 10 (assumed number of anodes)
r = 56 x 10/2(3.1416 + 10)
r = 560/26.28
r = 21.3 feet, use 22 feet

h) Spacing of main anodes. Generally the distance from the anode to the tank wall and tank bottom is about equal; this distance should be about one-half the circumferential distance between anodes.

(1) Circumferential spacing:

C = (2Br)/N

where
r = 22 feet (radius of anode circle)
N = 10 (assumed number of anodes)
C = 2 x 3.1416 x 22/10
C = 13.8 feet, use 14 feet

(2) Cord spacing is approximately the same as circumferential spacing: 14 feet will be used (see Figure 98).

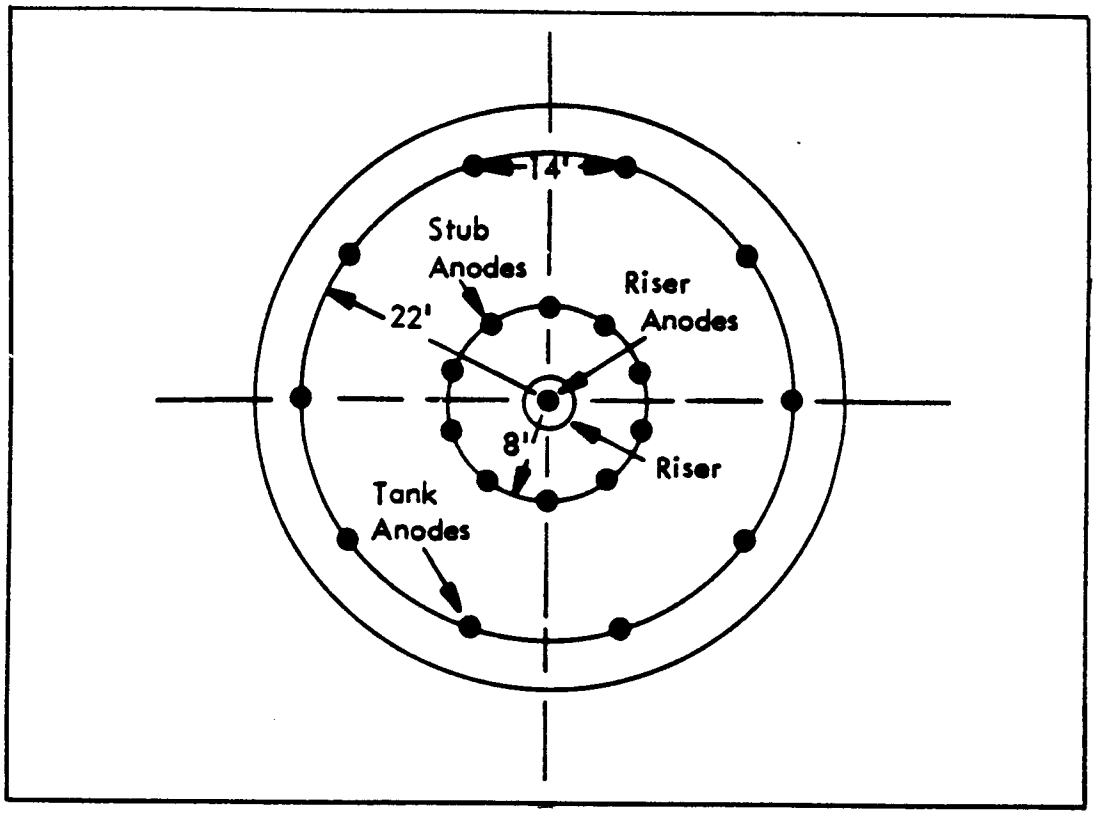

Figure 98
Anode Spacing for Elevated Steel Water Tank

i) Selection of main anodes:

(1) Size of anode units selected is 1-1/8-inch outside diameter by 3/4-inch inside diameter by 9 inches long. This is a standard sausage-type anode that weighs 1 pound, and has an effective surface area of 0.25 ft^2.

(2) The minimum number of anode units per anode string, based on a required weight of 304 pounds and 10 anode strings is computed as follows:

number of units = 304/(10 x 1) = 30.4; say 31 units per string.

(3) Because the internal tank surfaces are uncoated, a maximum structure-to-electrolyte voltage is not a limiting factor. However, because it is desired to hold the anode current at or below the manufacturers recommended discharge rate of 0.025 A per anode for this type anode, the minimum number of anodes will be 15.2 A/10 x 0.025 A = 60.8. Use 61 anodes per string. This number of anodes per string is not practical for the bowl since the distance between the anode hanger and the bottom of tank is only 28 feet. Table 27 shows the maximum recommended current discharge per anode for various types of anodes to ensure a 10-year minimum life. Using type B anode, three anodes per string are required. The manufacturer does not recommend more than two type B anodes per string assembly because of their fragile nature. Therefore, the best choice of anode for the main anode strings is

type C or type CDD. Type CDD is recommended because the lead wire connection is protected longer by the thicker wall of the enlarged ends. Two type CDD anodes per string provide a current capacity of 2 A x 10 strings = 20 A. These anodes are spaced as shown in Figure 99.

NOTE: The anodes chosen in this example were chosen to show the analogy that must be used in designing cathodic protection. With the advent of newer center connected tubular anodes, anode type TAFW, 2-3/16 inch by 8 inch, weighing 4.3 pounds each, should be used instead of CDD anodes.

Table 27
Technical Data - Commonly Used HSCBCI Anodes

ANODE TYPE	SIZE (in.)	WEIGHT (lb)	ANODE MAX. DISCHARGE (A)	AREA (ft^2)	MAX. CURRENT DENSITY (A/ft^2)
TA-FW	2-3/16 x 8	4.3	0.025	0.22	0.1
FW[1]	1-1/8 OD x 9	1	0.025	0.2	0.1
FC[2]	1-1/2 x 9	4	0.075	0.3	0.25
G-2	2 OD x 9	5	0.100	0.4	0.25
G-2-1/2	2-1/2 x 9	9	0.20	0.5	0.40
B[3,4]	1 x 60	12	0.50	1.4	0.36
C	1-1/2 x 60	25	1.00	2.0	0.50
CDD[3]	1-1/2 x 60	26	1.00	2.0	0.50
M[3]	2 x 60	60	2.5	2.8	0.9
SM	4-1/2 x 60	20	10.0	5.5	1.8
K-6	6 x 2-1/2	16	0.225	0.5	0.45
K-12	12 x 3-7/16	53	0.80	1.0	0.80
B-30	1 x 30	7	0.25	0.7	0.36
TA-2	2-3/16 x 84	46	6.4	4.0	1.6

[1]For elevated fresh water tank.

[2]For distributed system in ground trench.

[3]Each end enlarged with cored opening for wire.

[4]Not more than 2 anodes per assembly.

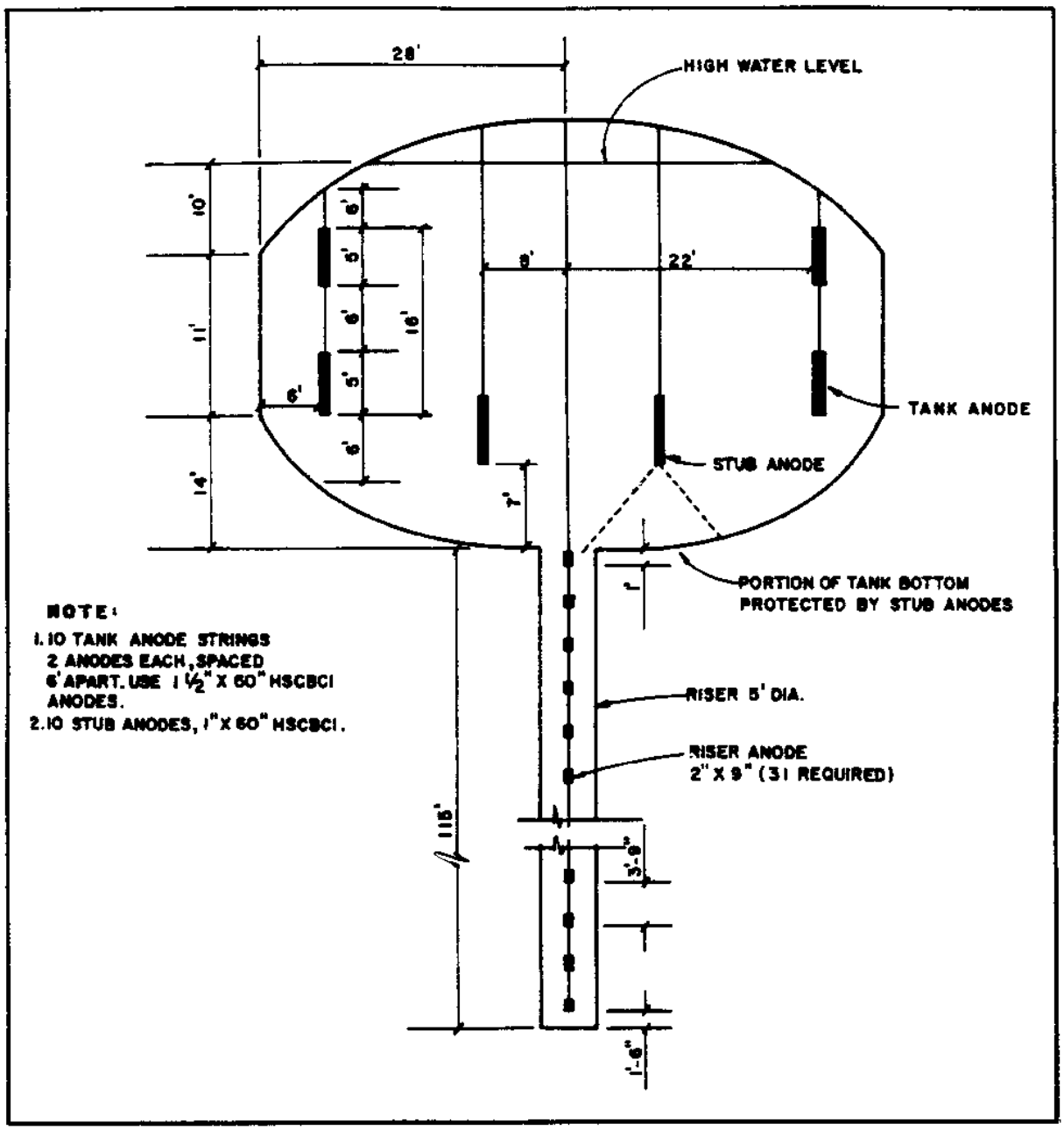

Figure 99
Anode Suspension Arrangement for Elevated
Steel Water Tank

(4) Anode current density is computed as follows:

Output = 15.2/2 x 10 x 2 = 0.38 A/ftÀ2Ù

j) Resistance of main anodes:

R = (0.012P log D/a)/L

where

P = 4,000 ohm-cm
D = 56 feet
L = 2 x 5 feet = 10 feet
a = 44 x 0.275 = 12.1 feet (0.275-equivalent diameter factor from curve) (see Figure 100)
R = (0.012 x 4,000 log 56/12.1)/10
R = 48 log 4.628/10
R = 3.19 ohms

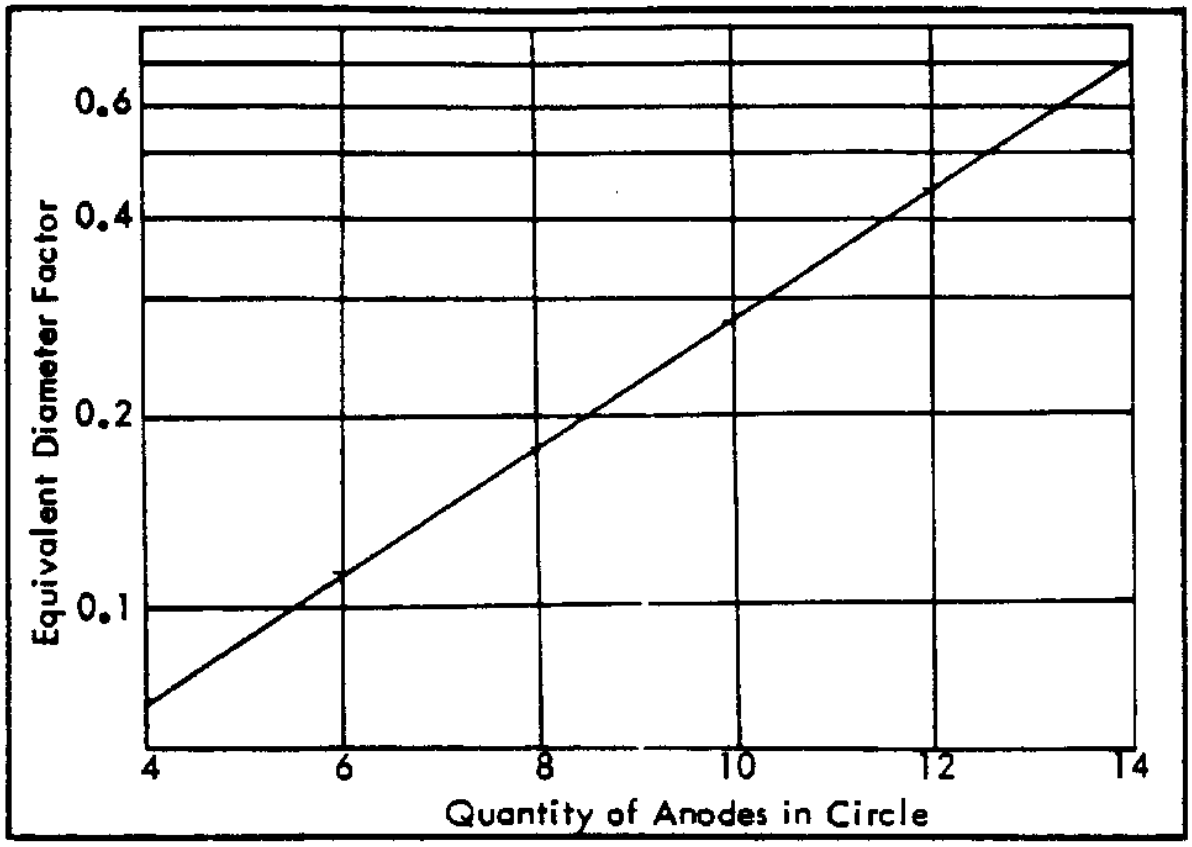

Figure 100
Equivalent Diameter for Anodes in a Circle in Water Tank

(1) However, the L/d ratio of two 1-1/2-inch diameter by 60-inch long anodes in tandem is less than 100 and thus the fringe factor must be used.

$$L/d = (2 \times 60)/1.5$$
$$L/d = 80 < 100$$

(2) The fringe factor from curve Figure 101 corresponding to L/d ratio is 0.95.

$$R \text{ (adjusted)} = 3.19 \times 0.95$$
$$R = 3.03 \text{ ohms}$$

k) Stub anodes:

(1) In the design of an elevated water tank, the need for stu anodes must be justified. The main anode radius has been calculated to b 22 feet. The main anodes are spaced to provide approximately the same distance from the sides and the bottom of the tank. The main anodes will protect a length along the tank bottom equal to 1-1/2 times the spacing o the anode from the bottom.

(2) The anode suspension arrangement for the tank under consideration is shown in Figure 99. Thus, it can be seen that stub anod are required for this design. Ten stub anodes are arranged equally space on a circumference that has a radius of 8 feet in a manner illustrated in Figure 98. For smaller diameter tanks, stub anodes may not be required.

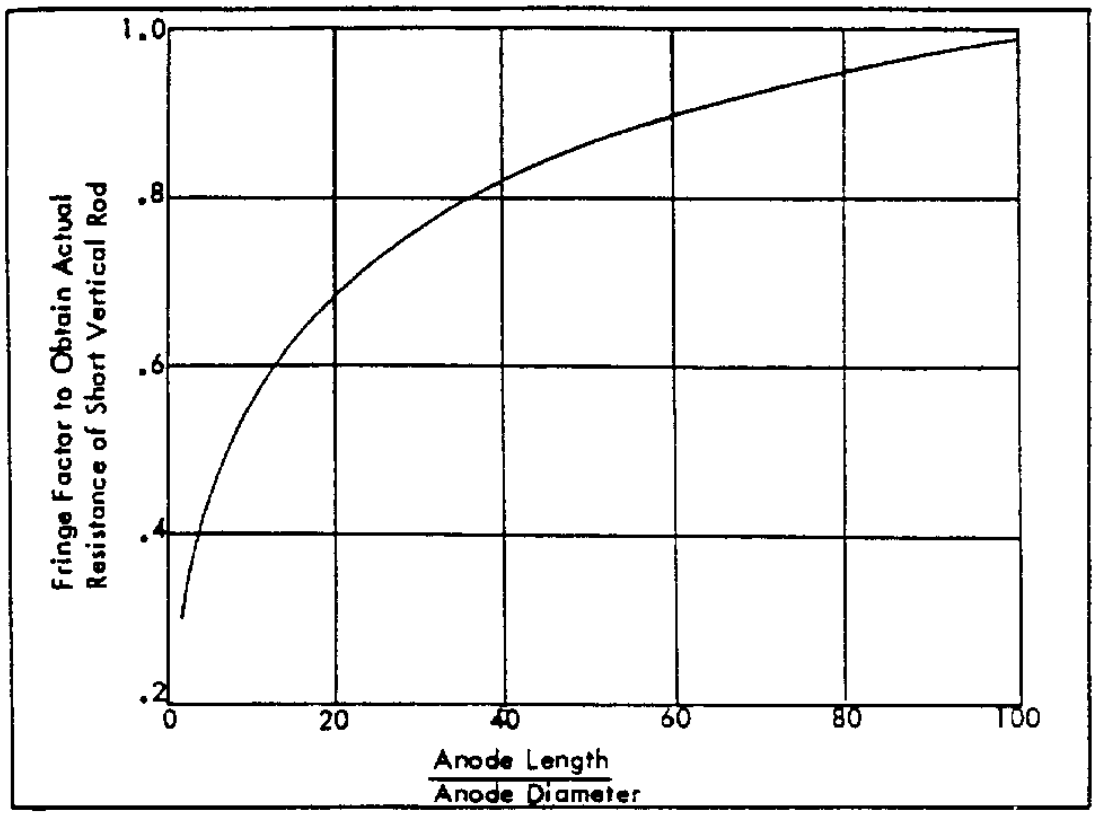

Figure 101
Fringe Factor for Stub Anodes

l) Current division between main and stub anodes:

(1) Area of tank bottom protected by stub anodes (see Figure 99):

$As = B(r_2^2 - r_1^2)$

where

r_2 = 13 feet (radius of protected segment)

r_1 = 2.5 feet (radius of riser)

$A_s = 3.1416 (169 - 6.25)$

$A_s = 3.1416 \times 162.75$

$A_s = 511.3 \text{ ft}^2$

(2) Maximum current for stub anodes:

$I_s = 2.0 \times 511.3$
$I_s = 1022.6$ mA or 1.02 A

(3) Maximum current for tank bowl = 15.2 A.

(4) Maximum current for main anodes:

$I_m = 15.2 - 1.02$

$I_m = 14.2$ A

m) Rectifier voltage rating:

(1) Electrical conductor to main anodes. Wire size No. 2 AWG, 0.159 ohm/1,000 feet (refer to Table 10), estimated length 200 feet:

$R = 200/1000 \times 0.159 = 0.032$

(2) Voltage drop in main anode feeder:

$E = IR$

where

$I = 14.2$ A
$R = 0.032$ ohm

$E = 14.2 \times 0.032$

$E = 0.45$ V

(3) Voltage drop through main anodes:

$E = IR$

where

I = 14.2 A
R = 3.03 ohms
E = 14.2 x 3.03
E = 43.0 V

(4) Total voltage drop in main anode circuit:

E_T = 0.45 + 43.0

E_T = 43.45 or 45 V

Use a multiplying factor of 1.5, or 67.5 V.

(5) The nearest commercially available rectifier meeting the above requirement is a single-phase, 80-V unit.

n) Selection of stub anodes. Because it is desirable to use as small an anode as possible without exceeding the manufacturers' recommended rate, try using type FC, HSCBCI anode measuring 1-1/2-inch by 9 inches. Use one anode per string as shown in Figure 99. Anode current density is computed as follows:

Output = 1.02/(10 x 0.03) = 0.34 A/ft^2

Because this exceeds the recommended maximum anode current density (refer to Table 27), the type B anode is the best choice.

o) Resistance of stub anodes:

R = 0.012P log D/a/L

where

P = 4,000 ohm-cm
D = 56 feet
L = 5 feet
a = 16 x 0.275 = 4.4 feet (factor from Figure 100)
R = (0.012 x 4,000 log 56/4.4)/5
R = 48 log 12.73/5
R = 48 x 1.105/5
R = 10.6 ohms
L/d = 60/1 = 60<100

Fringe factor from curve Figure 101, 0.90 R (adjusted) = 10.6 x 0.90 = 9.54 ohms

p) Voltage drop in stub anode circuit:

(1) Electrical conductor to stub anodes. Wire size No. 2 AWG, 0.159 ohms/1,000 feet (refer to Table 10), estimated length 200 feet:

R = (200/1,000) x 0.159 = 0.032 ohm

(2) Voltage drop in stub anode feeder.

$E = IR$

where

$I = 1.02$ A
$R = 0.032$ ohm
$E = 1.02 \times 0.032$
$E = 0.033$ V

(3) Voltage drop in anode suspension conductors. Estimated length 50 feet, No. 2 AWG (refer to Table 10), 0.159 ohms/1,000 feet:

$R = (50/1{,}000) \times 0.159 = 0.008$ ohm
$E = IR$

where

$I = 1.02/10 = 0.102$ A
$R = 0.008$ ohm
$E = 1.02 \times 0.008$
$E =$ negligible

(4) Voltage drop through stub anodes:

$E = IR$

where

$I = 1.02$ A
$R = 9.54$ ohms
$E = 1.02 \times 9.54$
$E = 9.73$ V

(5) Total voltage drop in stub anode circuit.

$E_I = 0.033 + 9.73$

$E_T = 9.76$ V

(6) Since the stub anode voltage is below the 45 V calculated for the main tank anode circuit, the necessary current adjustment can be accomplished through a variable resistor in the stub anode circuit.

q) Stub anode circuit variable resistor:

(1) Criteria for variable resistor. The resistor should be capable of carrying the maximum anode circuit current and have sufficient resistance to reduce anode current by one-half when full rectifier voltage is applied to the anode circuit.

(2) Stub anode circuit data:

Rectifier output = 80 V
Anode current = 1.02 A
Anode resistance = 9.54 ohms

(3) Variable resistor rating:

$R = E/I$

where

$E = 80$ V
$I = 1.02/2$ or 0.51 A
$R = 80/0.51$
$R = 156.9$ ohms

Ohmic value of resistor = 156.9 - 9.54 = 147.4 ohms
Wattage rating of resistor, $(1.02)^2 \times 147.4 = 153.4$ W

The nearest commercially available resistor size meeting the above requirements is a 175-W, 200-ohm, 1-A resistor.

r) Resistance of riser anodes. In order to get the maximum desired current in the riser (3.62 A), the resistance limit is calculated as follows:

$R = E/I$

where

$E = 43.45$ V
$I = 3.62$ A
$R = 43.5/3.62$
$R = 12.0$ ohms

s) Riser anode design:

(1) Type FW (1-1/8-inch by 9-inch) string type anodes cannot be used in the riser because the maximum anode current discharge of 0.025 A per anode would be exceeded. The number of type FW anodes required would be 145 and continuous throughout the riser. This is excessive. The best choice of anode for a flexible riser string is the type G-2 (2-inch by 9-inch) high-silicon cast iron anode.

(2) Number of units required:

$R = (0.012P \log D/d)/L$
$L = (0.012P \log D/d)R$

where

P = 4,000 ohm-cm
D = 5 feet
d = 2 inches or 0.166 feet
R = 12 ohms
L = (0.012 x 4,000 log 5/0.166)12
L = (48 x log 30.1)/12
L = (48 x 1,479)/12
L = 5.92 feet

Number of units = 5.92/0.75 = 7.9 or 8 units

In order to get proper current distribution in the riser pipe, the anode units should not be placed too far apart. It is generally considered that each anode unit protects a length along the riser pipe equal to 1-1/2 times the spacing of the anode from the riser pipe wall.

Riser height = 115 feet
Spacing (center of anode to tank wall) = 2.5 feet
Length of riser protected by one anode = 1.5 x 2.5 = 3.75 feet
Number of units required = 115/3.75 = 30.7 or 31 units.

To satisfy the maximum anode discharge current for a G-2 anode:

3.62 A/0.1 amp = 36

Therefore, 36 anodes are needed instead of 31 or 8.

(3) Anode resistance based on the use of 36 anode units:

R = (0.012P log D/d)/L

where

P = 4,000 ohm-cm
D = 5 feet
d = 2 inches or 0.166 feet
L = 36 x 9 inches = 324 inches or 27 feet
R = (0.012 x 4,000 log 5/0.166)/27
R = 48 log 30.1/27
R = 2.63 ohms

L/d ratio for the riser anode string is 324/2 or 162; thus no fringe factor correction is applied.

t) Voltage drop in riser anode circuit:

(1) Electrical conductor to riser anodes. Wire size No. 2 AWG, 0.159 ohms/1,000 feet (refer to Table 10), estimated length 200 feet:

R = 200/1,000 x 0.159 = 0.032 ohm

(2) Voltage drop in riser anode feeder:

E = IR

where

I = 3.62 A
R = 0.032 ohm
E = 3.62 x 0.032
E = 0.116 V

(3) Voltage drop in riser anode suspension cables. Wire size No. 2 AWG, 0.159 ohm/1,000 feet (refer to Table 10), estimated length 130 feet:

R = 130/1,000 x 0.159 = 0.02 ohm
E = IR

where

I = 3.62/2 = 1.81 A average (single current does not flow the full length of the anode string)

R = 0.02 ohm
E = 1.81 x 0.02
E = 0.04 V

(4) Voltage drop through riser anodes:

E = IR

where

I = 3.62 A
R = 2.63 ohms
E = 3.62 x 2.63
E = 9.52 V

(5) Total voltage drop in riser anode circuit:

E_T = 0.116 + 0.04 + 9.52

E_T = 9.69 V

u) Riser anode circuit variable resistor:

(1) Criteria for the variable resistor are the same as given for the stub anode resistor.

(2) Riser anode circuit data:
Rectifier output, 80 V
Anode current, 3.62 A
Anode resistance = 2.63 + 0.032 + 0.02 = 2.68 ohms

(3) Variable resistor rating:

$R = E/I$

where

$E = 80$ V
$I = 3.62/2 = 1.81$ A
$R = 80/1.81$
$R = 44.2$ ohms

Ohmic value of resistor = 44.2 - 2.68 = 41.5 ohms.
Wattage rating of resistor = $(3.62)^2 \times 41.5 = 543.8$ W

(Resistor should reduce anode current by one-half when fullrectifier voltage is applied.)

The nearest commercially available resistor size that meets the above requirements is a 750-W, 50-ohm, 3.87-A resistor. This rheostat is 10 inches in diameter and 3 inches in depth, and fairly expensive. This rheostat will not fit into most rectifier cases. In addition, the power consumed by the rheostat is considerable. This power creates substantial heat that may damage components within the rectifier case unless adequate ventilation is provided. The problems associated with using a large rheostat can be eliminated by using a separate rectifier for the riser anodes. Although initial cost may be slightly high, power savings will be substantial and damage by heat will be avoided.

v) Sizing rectifier for riser:

(1) Requirements:

dc current output = 3.62 A
Anode circuit resistance = 2.68 ohms
dc voltage required = IR = 3.62 x 2.68 E = 9.70 V

(2) Rectifier rating. Standard ratings for a rectifier in this size class are 18 V, 4 A.

w) Rectifier dc rating for bowl. Voltage output as previously determined, 80 V. Current rating is 15.2 A. The nearest commercially available rectifier meeting the above requirements is 80 V, 16 A.

x) Wire sizes and types. All positive feeder and suspension cables (rectifier to anodes) must be No. 2 AWG, HMWPE insulated copper cable. To avoid complication, the negative rectifier cable (rectifier to structure) must be the same size and type (see Figure 102).

y) Discussion of the design:

(1) The design points out the disadvantages of achieving corrosion control through cathodic protection without the aid of a protective coating. When the interior of a tank is coated, the current requirement is

reduced from 60 to 80 percent. On large tanks without coating, larger si and more expensive anodes, wire, and rectifier units must be used. In addition, the power consumed by the uncoated tank is far greater. These additional costs usually exceed the cost of a quality coating system over 10-year period. Corrosion above the water line of a water storage tank i usually severe because of the corrosive nature of condensation. For this reason, protective coatings must be used above the water line on both lar and small water storage tanks to mitigate corrosion.

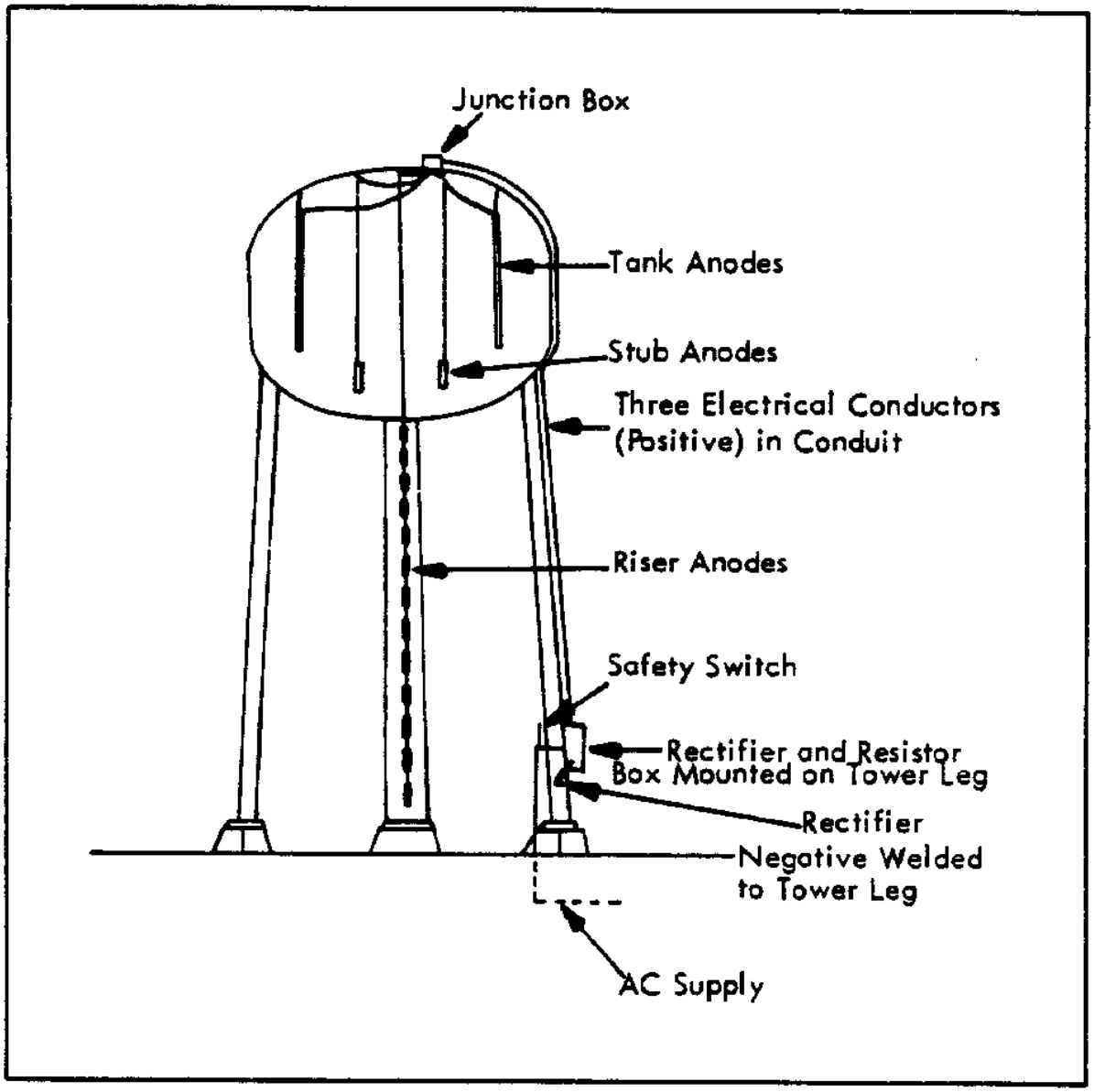

Figure 102
Elevated Steel Water Tank Showing Rectifier and Anode Arrangement

(2) For further assistance and guidance in the design of cathodic protection systems for elevated cold water storage tanks, see Figures 102 through 104.

(3) The HSCBCI anodes were selected for this particular design purely for illustrative purposes. It does not mean that this material is superior to other types of anode material. Other acceptable anode materials include aluminum and platinized titanium or niobium. With the advent of newer tubular center connected anodes, the designer should choose these anodes over the end connected in most cases because of their higher current capability and longer life.

(4) For this design, silicon cells should be specified for the rectifier that protects the bowl and selenium cells should be specified for the rectifier that protects the riser. Silicon cells operate more efficiently at high dc output voltages than selenium cells do but require elaborate surge and overload protection. This protection is not economical in the low power consuming units. A guide for selection of rectifying cells is as follows: Use silicon cells for single-phase rectifiers operated above 72 V dc or three-phase rectifiers operated above 90 V dc. Use newer nonaging selenium for single-phase rectifiers operated below 72 V dc or three-phase rectifiers operated below 90 V dc.

9.3 Elevated Water Tank (Where Ice is Expected). Impressed current cathodic protection is designed for an elevated water as shown in Figure 105. The tank is already built, and current requirement tests have been made. Anodes must not be suspended from the tank roof, because heavy ice (up to 2 feet thick) covers the water surface during winter. The weight of this ice could not be tolerated on the anode cables, so another method of support is used. Button anodes must be mounted on the floor of the tank and lightweight platinized titanium anodes must be suspended in the riser from the tank bottom.

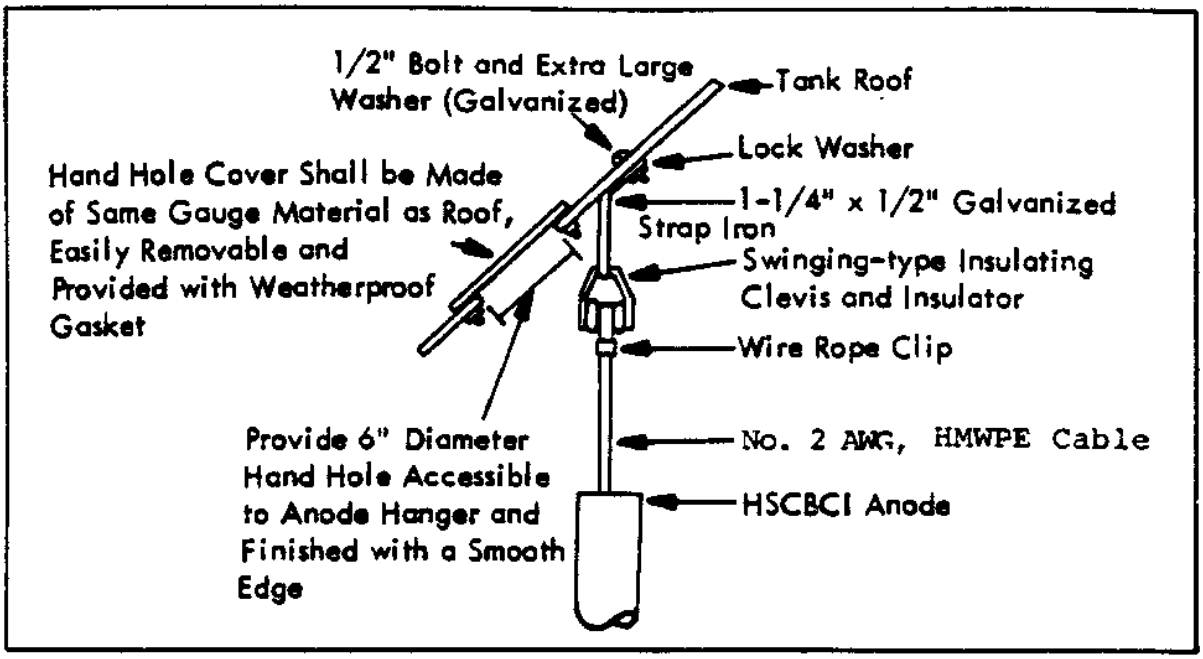

Figure 103
Hand Hole and Anode Suspension Detail for Elevated Water Tank

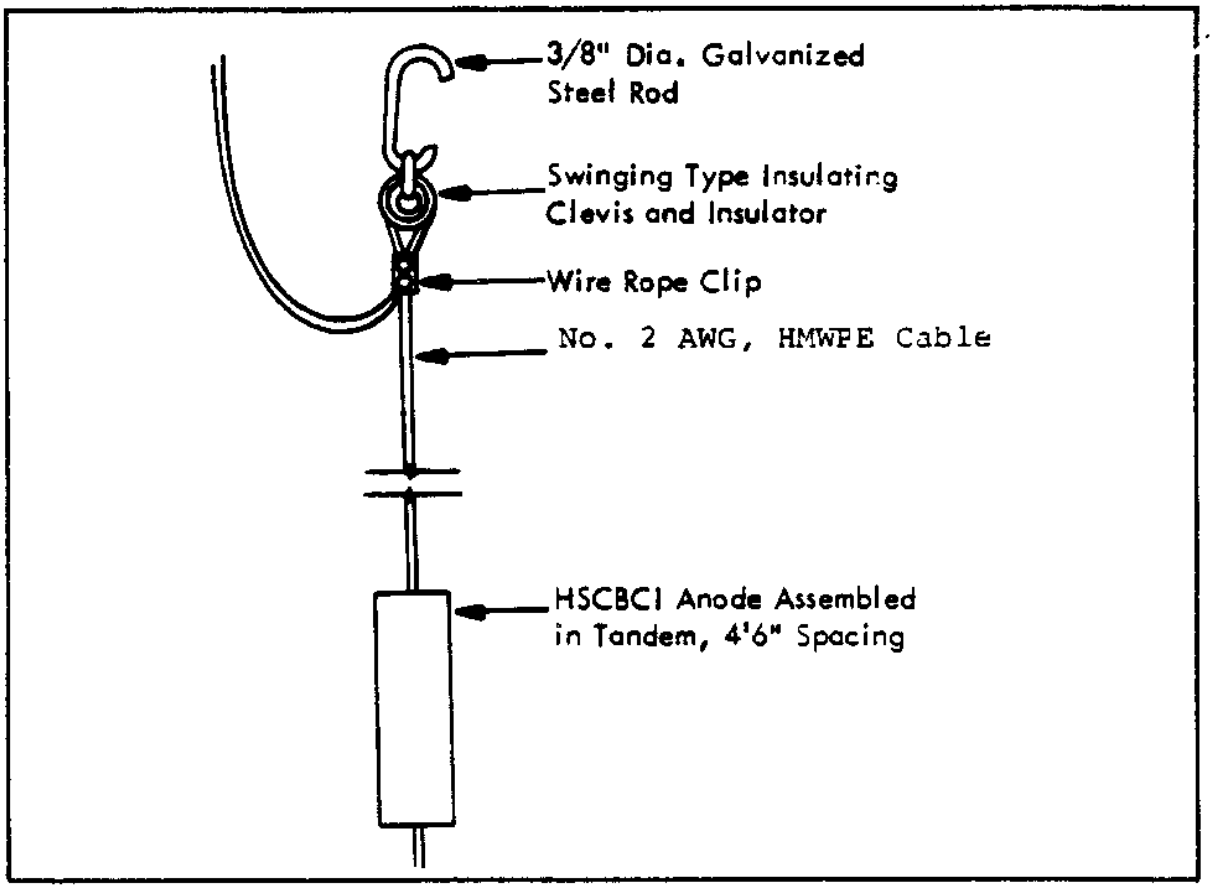

Figure 104
Riser Anode Suspension Detail for Elevated Water Tank

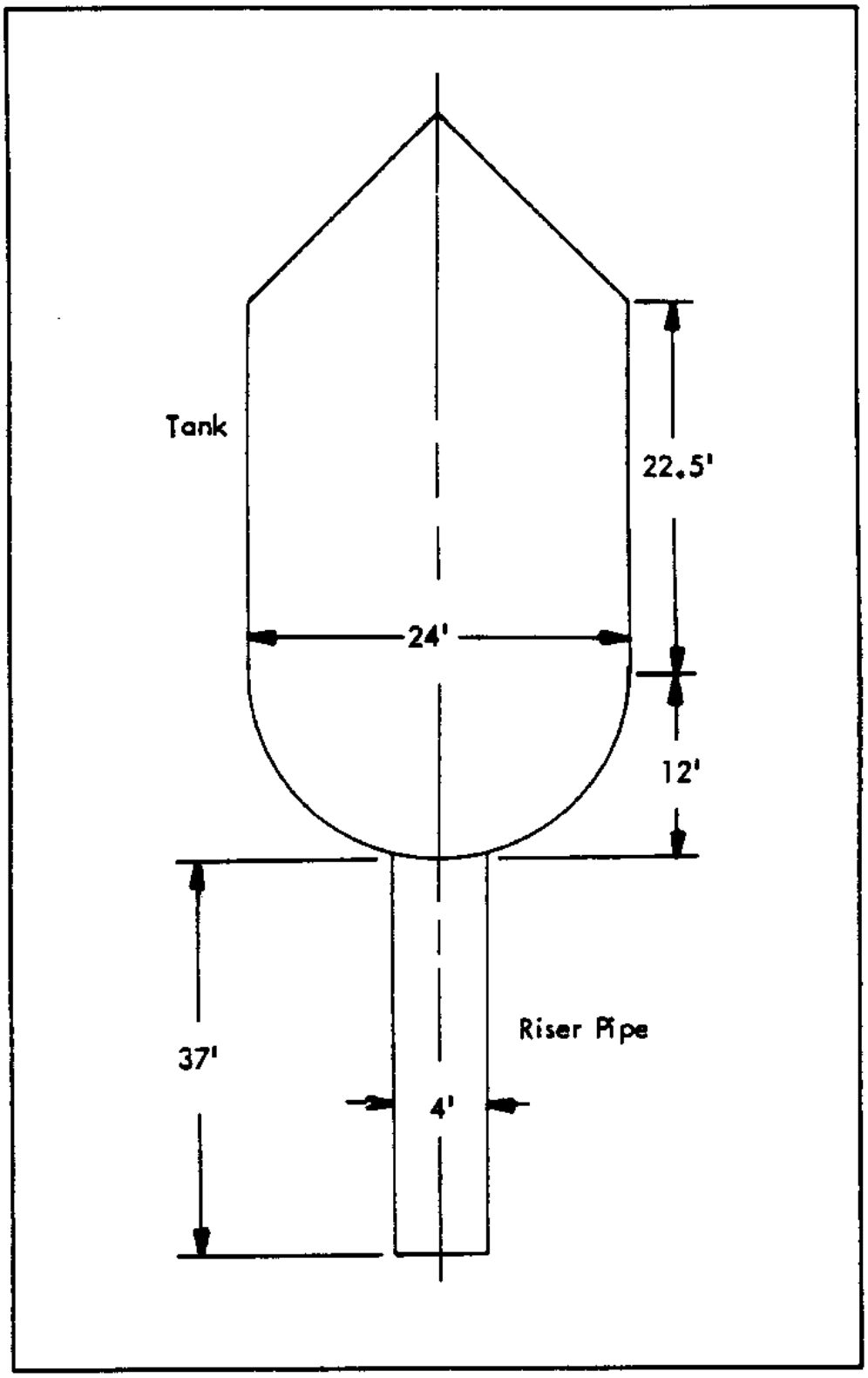

Figure 105
Dimensions: Elevated Steel Water Tank

9.3.1 Design Data

a) Tank height (from ground to bottom of bowl) - 37 feet

b) Tank diameter - 24 feet

c) High water level in tank - 34.5 feet

d) Overall depth of tank - 34.5 feet

e) Vertical shell height - 22.5 feet

f) Riser pipe diameter - 4 feet

g) Shape of tank - Semicircular bottom

h) All internal surfaces are uncoated

i) Current required for protection - Bowl-7.0 A, Riser-1.0 A

j) Electrical power available - 120/240 V ac single phase

k) Tank is subject to freezing

l) Design life - 15 years

m) Water resistivity - 4,000 ohm-cm

n) Button type HSCBCI anodes are used for the tank

o) Riser anodes are platinized titanium wire.

9.3.2 Computations

a) Minimum weight of button anode material required for tank:

$$W = YSI/E$$

where

Y = 15 years
S = 1.0 lbs/A yr
I = 7.0 A
E = 0.50
W = (15 x 1.0 x 7.0/0/0.50
W = 210 pounds

b) Number of tank anodes. Button anodes weigh 55 pounds:

$$N = 210/55 = 3.82 \text{ (use 4 anodes)}$$

c) Minimum weight of riser anode material required for riser:

$$W = YSI/E$$

where

$Y = 15$ years
$S = 1.32 \times 10^{-5}$ lbs/A yr
$I = 1.0$ A
$E = 0.50$
$W = (15 \times 1.32 \times 10^{-5} \times 1.0)/0.50$
$W = 3.96 \times 10^{-4}$ pounds

d) Number of riser anodes. Platinized titanium wire 0.1-inch diameter, 3 feet long, with 0.001-inch-thick platinum over titanium will be used for each anode. The weight of platinum on each anode is 8.8×10^{-5} pounds:

$$N = (3.96 \times 10^{-4})/(8.8 \times 10^{-5}) = 4.5 \text{ (use 5 anodes)}$$

e) Location of anodes (see Figure 106):

(1) Button anodes are mounted on the base of the tank at a distance of 1/4 the tank diameter (6 feet) from the center. They are mounted on metal angles and plates welded to the tank bottom; polyethylene insulation is required to separate the anode from the metal mounting. Riser anodes are suspended in the center of the riser pipe, spliced to a No. 4 AWG cable. The top anode is placed 1 foot from the tank base. The remaining four anodes are spaced at 4-foot intervals.

(2) Each button anode has its own No. 8 AWG, 7-strand copper cable (HMWPE) run in conduit to a resistor box mounted at eye level on a tank leg. The riser anode's one No. 4, AWG, 7-strand cable is run in conduit to the resistor box. If required to get proper current output, a resistor must be installed in the riser anode circuit at the time of rectifier sizing. The rectifier must be sized once the anodes are installed and must be mounted at eye level adjacent to the resistor box.

9.4 Steel Gas Main. Impressed current cathodic protection is designed for the 6-inch welded gas main shown in Figure 107. This pipeline is not constructed, so measurements may not be made.

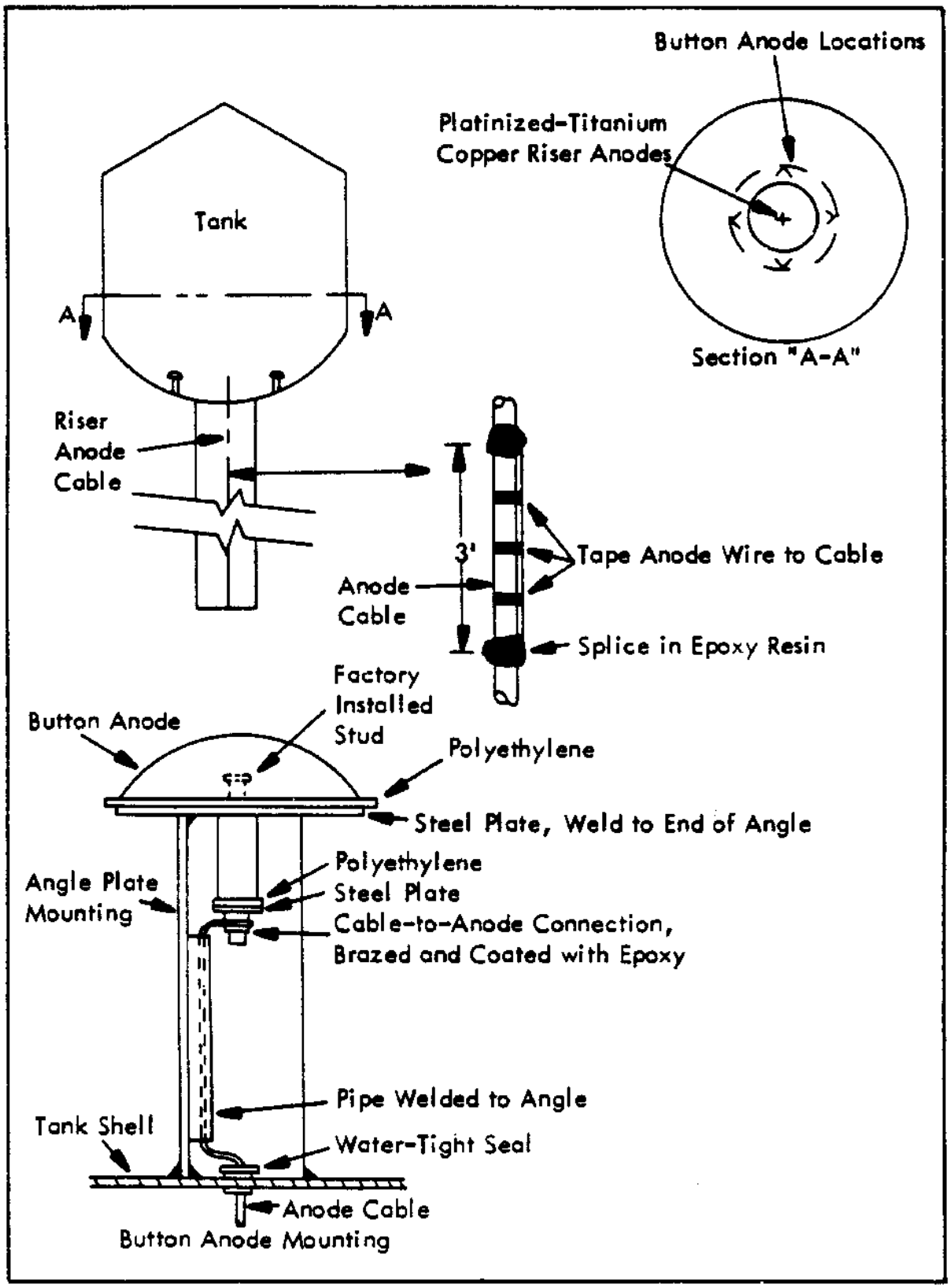

Figure 106
Cathodic Protection for Tanks Using Rigid-Mounted
Button-Type Anodes and Platinized Titanium Wire

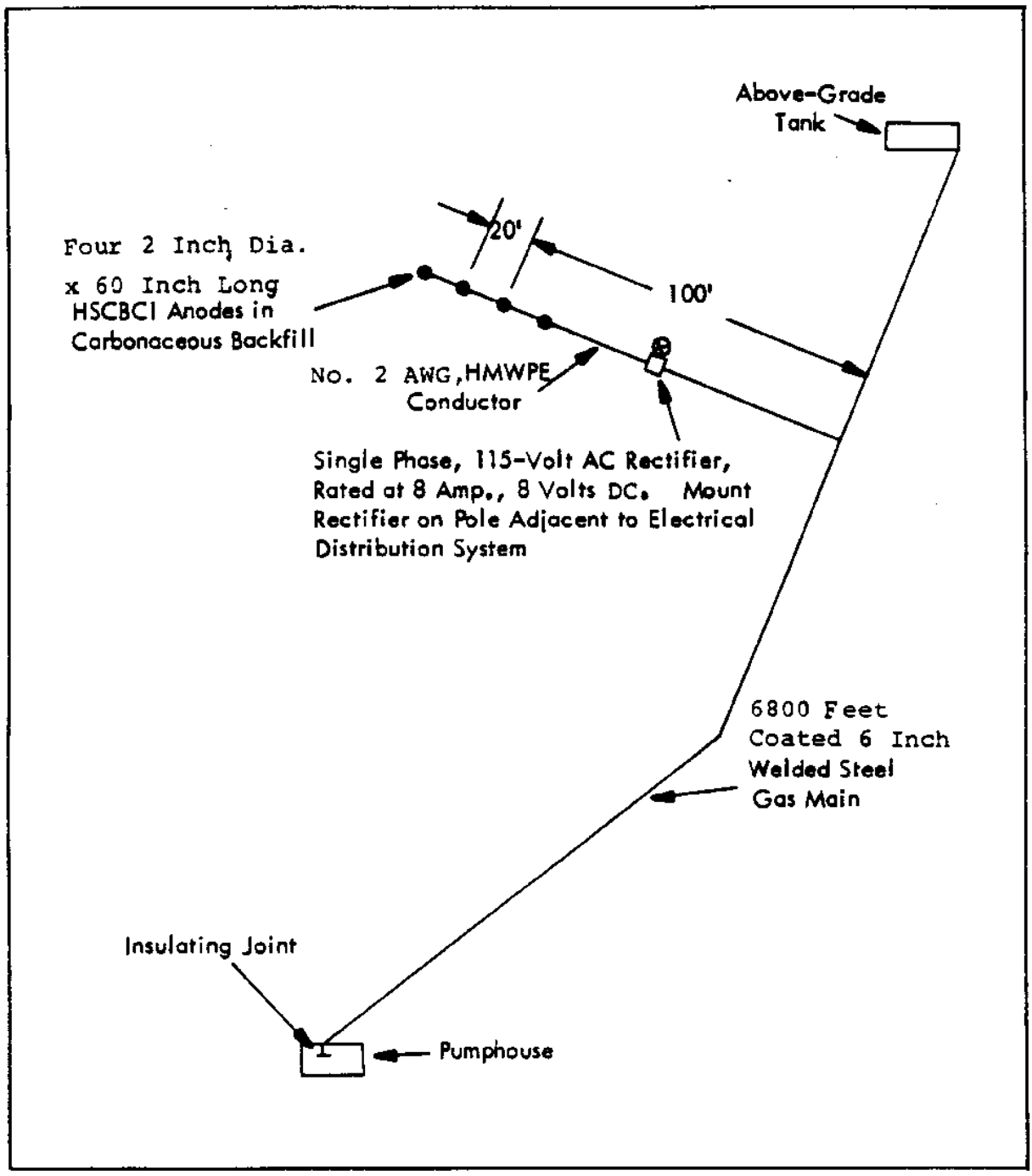

Figure 107
Cathodic Protection System for Gas Main

9.4.1 Design Data

a) Average soil resistivity, 2,000 ohm-cm.

b) Pipe size, 6-inch outside diameter.

c) Pipe length, 6,800 feet.

d) Design for 15-year life.

e) Design for 2 mA/ft² of bare pipe.

f) Design for 90 percent coating efficiency, based on experience.

g) The pipeline must be isolated from the pumphouse with an insulating joint on the main line inside the pumphouse.

h) HSCBCI anodes must be used with carbonaceous backfill.

i) The pipe is coated with hot-applied coal-tar enamel and holiday checked before installation.

j) Anode bed must not exceed 2 ohms.

k) Electric power is available at 120/240 V ac, single phase, from a nearby overhead distribution system.

9.4.2 Computations

a) Outside area of gas main:

Pipe size - 6 inches (nominal)
Pipe length - 6,800 feet
Pipe area - 6,800 x 1.734 = 11,791 ft²

b) Area of bare pipe to be cathodically protected based on 90 percent coating efficiency:

A = 11,791 x 0.1
A = 1,179 ft²

c) Protective current required based on 2 mA/ft² of bare metal:

I = 1,179 x 2
I = 2,358 mA or 2.36 A

d) Ground bed design:

(1) Anode size, 2-inch x 60-inch (backfilled 10-inch x 84-inch), spaced 20 feet apart.

(2) Resistance of a single anode to earth:

$$R_v = \frac{P}{L} K$$

where

P = earth resistivity, ohm-cm
K = shape function (refer to para. 6.2.1.4a)
L = backfilled anode length

where

P = 2,000 ohm-cm
L = 7.0 feet
K = 0.0167 (refer to para. 6.2.1.4a)
L/D = 84 inches/10 inches backfill size
R_v = 2,000 x 0.167/7.0 ohms
R_v = 4.77 ohms

(3) Number of anodes required. It was stated in the design data that the anode bed resistance is not to exceed 2 ohms. Anode size used is 2-inch diameter x 60 inches long with carbonaceous backfill having overall dimensions of 10-inch diameter x 84 inches long and spaced 20 feet apart:

$$R_n = (1/n)R_v + P_s p/S$$

where

R_n = anode bed resistance

n = number of anodes

R_v = single anode resistance

P_s = earth resistivity with pin spacing equal to S

p = paralleling factor (refer to para. 6.2.1.4b)

S = spacing between adjacent anodes

where

R_n = 2 ohms

R_v = 4.77 ohms

P_s = 2,000 ohm-cm

S = 20 feet

NOTE: p is a function of n as referred in para. 6.2.1.4b) and n is the number of anodes which are determined by trial and error.

Rearranging the equation for n:

$n = R_v/[R_n - (P_s p)/S]$

$n = 4.77/[2-(2,000p)/20]$
$n = 4.77/(2-100p)$

Try n = 4 anodes,

p = 0.00283 (refer to para. 6.2.1.4b)
4 = 4.77/(2-0283)
4 = 4.77/1.717
4 = 2.78 (not very close)

Try n = 3 anodes,

p = 0.00289 (refer to para. 6.2.1.4b)
3 = 4.77/(2-0.289)
3 = 4.77/1.711
3 = 2.79

This is the closest possible. In order to keep total resistance below 2.0 ohms, use 3 anodes.

(4) Actual resistance:

$R_n = (1/n)R_v = P_s p/S$

$R_3 = (1/3)4.77 + 2,000\ (0.00289)/20$

$R_3 = 1.59 + 0.29$

$R_3 = 1.87$ ohms which is below 2.0

e) Total weight of anodes for ground bed:

(1) Weight of anode unit, 60 pounds (size 2 inches x 60 inches)

(2) Total weight = 3 x 60 = 180 pounds

f) Theoretical life of anode bed:

W = YSI/E

Rearranging gives

Y = WE/SI

where

W = 180 pounds
S = 1.0 lbs/A yr
E = 0.50 efficiency
I = 2.36 A
Y = (180 x 0.50)/(1.0 x 2.36) = 38.1 years

It should be noted that the expected ground bed life greatly exceeds the design requirement of 15 years. This is brought about by the additional anode material required to establish a 2-ohm ground bed. The lower ground bed resistance saves energy (power, $P = I^2 R$).

g) Resistance of dc circuit:

(1) Ground bed-to-soil resistance, 2.0 ohms maximum.

(2) Resistance of ground bed feeder conductor (length 500 feet, type HMWPE, size No 2 AWG):

Conductor resistance (refer to Table 10):

0.159 ohm/1,000 feet
R = 500 feet x 0.159 ohms/1,000 feet
R = 0.080 ohms

(3) Total resistance of circuit:

R_T = 2.0 + 0.080 = 2.08 ohms:

h) Rectifier rating:

(1) Minimum current requirement, 2.36 A.

(2) Circuit resistance, 2.08 ohms.

(3) Voltage rating:

E = IR

where

I = 2.36 A
R = 2.08 A
E = 2.36 x 2.08 V
E = 4.9 or 5.0 V

To allow for rectifier aging, film formation, and seasonal changes in the soil resistivity, it is considered good practice to use a multiplying factor of 1.5 to establish the rectifier voltage rating.

E = 5.0 x 1.5 = 8.0 V

(4) The commercial size rectifier meeting the above requirements is 115-V, single-phase, selenium, and full-wave bridge type having a dc output of 8 A, and 8 V.

i) Rectifier location. Mount the rectifier at eye level on a separate pole adjacent to an existing overhead electrical distribution sy

9.5 Gas Distribution System. Galvanic cathodic protection is designed for a gas distribution system in a housing area as shown in Figure 108.

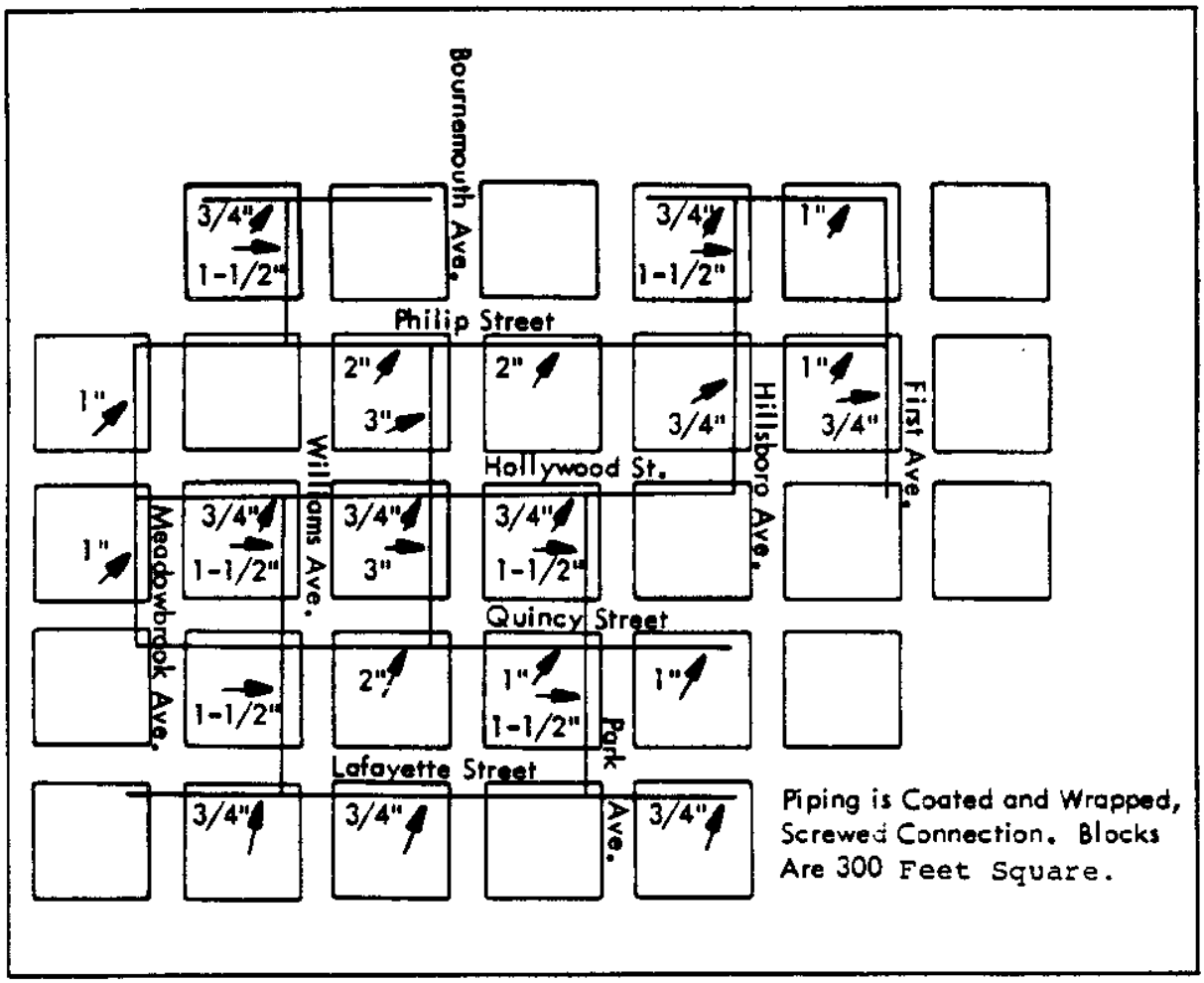

Figure 108
Layout of Gas Piping in Residential District

9.5.1 Design Data

a) Average soil resistivity, 4,500 ohm-cm.

b) Design for 90 percent coating efficiency, based on experience.

c) Design for 15-year life.

d) Design for 2 mA/ft² of bare pipe.

e) Packaged type magnesium anodes must be used.

f) Insulating couplings are used on all service taps. The mains are electrically isolated from all other metal structures in the area.

g) All pipe was precoated at the factory and wrapped with asbestos felt. The coating was tested over the trench for holidays and defects corrected. The coating is considered to be better than 99.5 percent perfect at the time of installation.

9.5.2 Computations

a) Total outside area of piping:

Pipe Size (in.)	Pipe Length (ft)	Pipe Area (ft²/lin ft)	Area of Pipe (ft²)
3	600	0.916	550
2	1,500	0.622	933
1-1/2	1,800	0.499	898
1	2,400	0.344	826
3/4	3,900	0.278	1,084
	Total area of pipe in ft²		4,292

b) Area of bare pipe to be cathodically protected based on 90 percent coating efficiency:

$$A = 4{,}292 \times 0.1$$
$$A = 429 \text{ ft}^2$$

c) Maximum protective current required based on 2 mA/ft² of bare metal.

$$I = 2 \times 429$$
$$I = 858 \text{ mA or } 0.858 \text{ A}$$

d) Weight of anode material required based on maximum current requirement and 15-year life:

$$W = YSI/E$$

where

Y = 15 years
S = 8.8 lbs/A yr
I = 0.858 A
E = 0.50 efficiency
W = (15 x 8.8 x 0.858)/0.50 pounds
W = 227 pounds

It should be noted that the 227 pounds are based on an output current of 0.86 A for the full design life of the cathodic protection system, 15 years. Strictly speaking, this is not the true condition, because current output following a new installation is much less due to the high coating efficiency. The average current requirement at first may be as low as 0.03 mA/ft² of pipe area.

e) Current output of a single 17-pound standard packaged magnesium anode to ground:

$$i = Cfy/P$$

where

C = 120,000, constant for well-coated structures using magnesium
f = 1.00, (refer to Table 3)
y = 1.00, (refer to Table 4)
P = 4,500 ohm-cm
i = 120,000 x 1.00 x 1.00/4,500
i = 26.7 mA

Because the structure is well coated, the anode spacing is relatively great. Therefore, the "multiplying factor for magnesium anode groups" (refer to Table 5) is not used.

f) Number of anodes (n).

$$n = I/i$$

where

I = 858 mA
i = 26.7 mA
n = 858/26.7
n = 32.1 (use 32 anodes)

g) Anode distribution:

(1) Area of pipe protected by one anode:

A = 4,288/32
A = 134 ft²/anode

(2) Division of anodes:

Pipe Size (in.)	Pipe Area (ftÀ2Ù)	Pipe length (ft)	Number of Anodes	Anode Spacin (ft)
3	550	600	4	150
2	933	1,500	7	214
1-1/2	898	1,800	7	257
1	826	2,400	6	400
3/4	1,084	2,900	8	362
		Total number of anodes	32	

9.6 Black Iron, Hot Water Storage Tank. Impressed current cathodic protection is designed for the interior of a black iron, hot water storag tank shown in Figure 109.

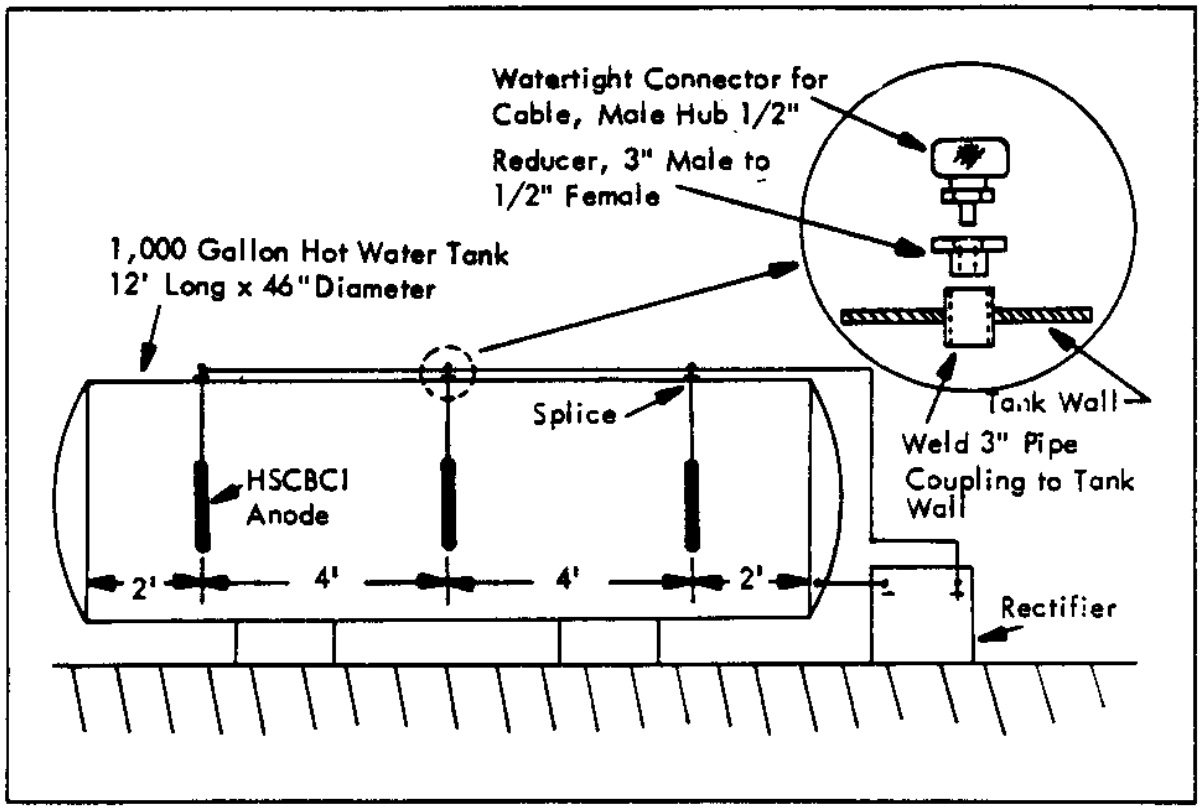

Figure 109
Cathodic Protection for Black Iron, Hot Water Storage Tank

9.6.1 Design Data

a) Tank capacity, 1,000 gallons.

b) Tank dimensions, 46 inches in diameter by 12 feet long.

c) Tank is mounted horizontally.

d) Water resistivity is 8,600 ohm-cm with a pH value of 8.7.

e) Tank interior surface is bare and water temperature is maintained at 180 degrees F (82.2 degrees C).

f) Design for maximum current density of 5 mA/ft^2.

g) Design life, 5 years.

h) Use HSCBCI anodes.

i) Alternating current is available at 115 V ac, single phase.

9.6.2 Computations

a) Interior area of tank:

$$A_T = 2Br^2 + BdL$$

where

$r = 1.92$ feet
$d = 3.83$ feet
$L = 12$ feet

$$A_T = 2 \times 3.1416 \times (1.92)^2 + 3.1416 \times 3.83 \times 12$$

$$A_T = 167.5 \text{ ft}^2$$

b) Maximum protective current required:

$$I = 167.5 \times 5$$
$$I = 838 \text{ mA or } 0.84 \text{ A}$$

c) Minimum weight of anode material for 5-year life:

$$W = YSI/E$$

where

$Y = 5$ years
$S = 1.0$ lbs/A yr
$I = 0.84$ amp
$E = 0.50$ efficiency
$W = 5 \times 1.0 \times 0.84$ pounds/0.50
$W = 8.4$ pounds

d) Number of anodes required. Anode size of 1-1/2 inches in diameter by 9 inches long weighing 4 pounds each is selected as the most suitable size. In order to get proper current distribution, three anodes are required.

e) Resistance of single anode:

$$R = 0.012P \log (D/d)/L$$

where

P = 8,600 ohm-cm
D = 3.83 feet, tank diameter
d = 1-1/2 inches or 0.125 foot, anode diameter
L = 9 inches or 0.75 foot, anode length
R = 0.012 x 8,600 log (3.83/0.125)/0.75
R = 103.2 x log 30.64/0.75
R = 103.2 x 1.486/0.75
R = 204.5 ohms

This resistance must be corrected by the fringe factor because they are short anodes. The fringe factor is 0.48 from the curve in Figure 101 for an L/d = 9/1.5 = 6:

R = 204.5 x 0.48
R = 98.2 ohms

f) Resistance of 3 anode group:

$$R_n = (1n)R_v + (Pxp)/S$$

where

R_n = total anode-to-electrolyte resistance
n = number of anodes
R_v = resistance-to-electrolyte of a single anode
P = electrolyte resistivity
p = "paralleling factor" (from para. 6.2.1.4b)
S = spacing between anodes (feet)

$$R_n = 1/3(98.2) + (8,600 \times 0.00289/4)$$

$$R_n = 38.94 \text{ ohms}$$

g) Rectifier rating:

(1) E = IR

where

$I = 0.84$ A
$R = 38.94$ ohms
$E = 0.84 \times 38.94$
$E = 32.7$ V

(2) To allow for rectifier aging and film formation, it is considered good practice to use a 1.5 multiplying factor.

$E = 1.5 \times 32.7 = 49.1$ V

(3) The nearest commercially available rectifier size meeting the above requirements is a 60-V, 4-amp, single-phase unit.

h) Rectifier location. Locate the rectifier adjacent to tank for the following reasons:

(1) Usually cheaper to install.

(2) Easier to maintain.

(3) Keeps dc voltage drop to a minimum.

i) dc circuit conductors:

(1) External to tank: Use No. 2 AWG, HMWPE.

(2) Interior of tank: Use No. 8 AWG, HMWPE.

No stressing or bending of the cable should be permitted.

9.7 Underground Steel Storage Tank. Galvanic cathodic protection is designed for an underground steel storage tank as shown in Figure 110. The tank is already installed and current requirement tests have been made.

9.7.1 Design Data

a) Tank diameter, 12 feet.

b) Tank length, 40 feet.

c) Design for 80 percent coating efficiency, based on experience.

d) Design for 15-year life.

e) Current requirements, 0.7 A.

f) Packaged, 17-pound standard magnesium anodes must be used.

g) The tank is adequately insulated from foreign structures.

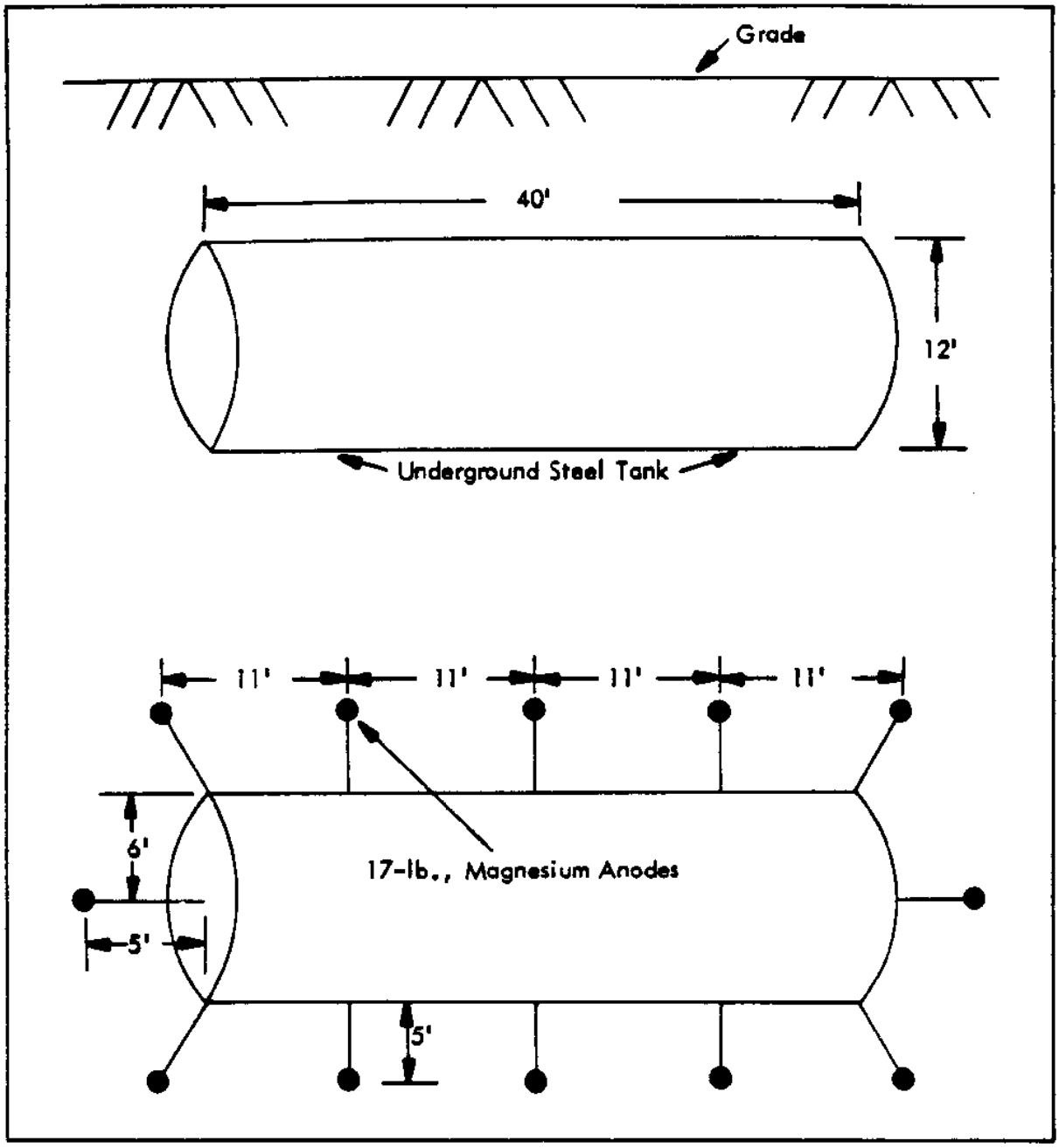

Figure 110
Galvanic Anode Cathodic Protection of Underground Steel Storage Tank

9.7.2 Computations

a) Minimum weight of anodes required for tank:

$$W = YSI/E$$

where

Y = 15 years
S = 8.8 lbs/A yr
I = 0.7 amp
E = 0.50 efficiency
$W = 15 \times 8.8 \times 0.7/0.50$
W = 184.8 pounds

b) Number of magnesium anodes:

$N = 184.8/17 = 10.9$ (use 12 anodes for symmetry).

Anodes are placed as shown in Figure 110.

9.8 Heating Distribution System. Impressed current cathodic protection is designed for a well coated buried heating distribution system as shown in Figure 111. The distribution system has not yet been installed, so current requirements, etc., cannot be made. Rectifier size need not be calculated, because it is sized in the field after installation of anodes.

9.8.1 Design Data

a) Average soil resistivity, 1,000 ohm-cm.

b) Design for 80 percent coating efficiency, based on experience.

c) Design for 4 mA/ft^2 of bare metal heating conduits.

d) Ground bed resistance must not exceed 1.5 ohms.

e) Graphite anodes must be installed with carbonaceous backfill.

f) Design for 15-year life.

g) Insulating joints must be provided on both steam and condensate lines at the first flange connection inside of all buildings.

h) All conduit must be metallically bonded together in each manhole.

i) All conduit is precoated at the factory and at no time is it holiday-checked.

j) Single-phase electric power is available at 120/240 V ac from the administration building.

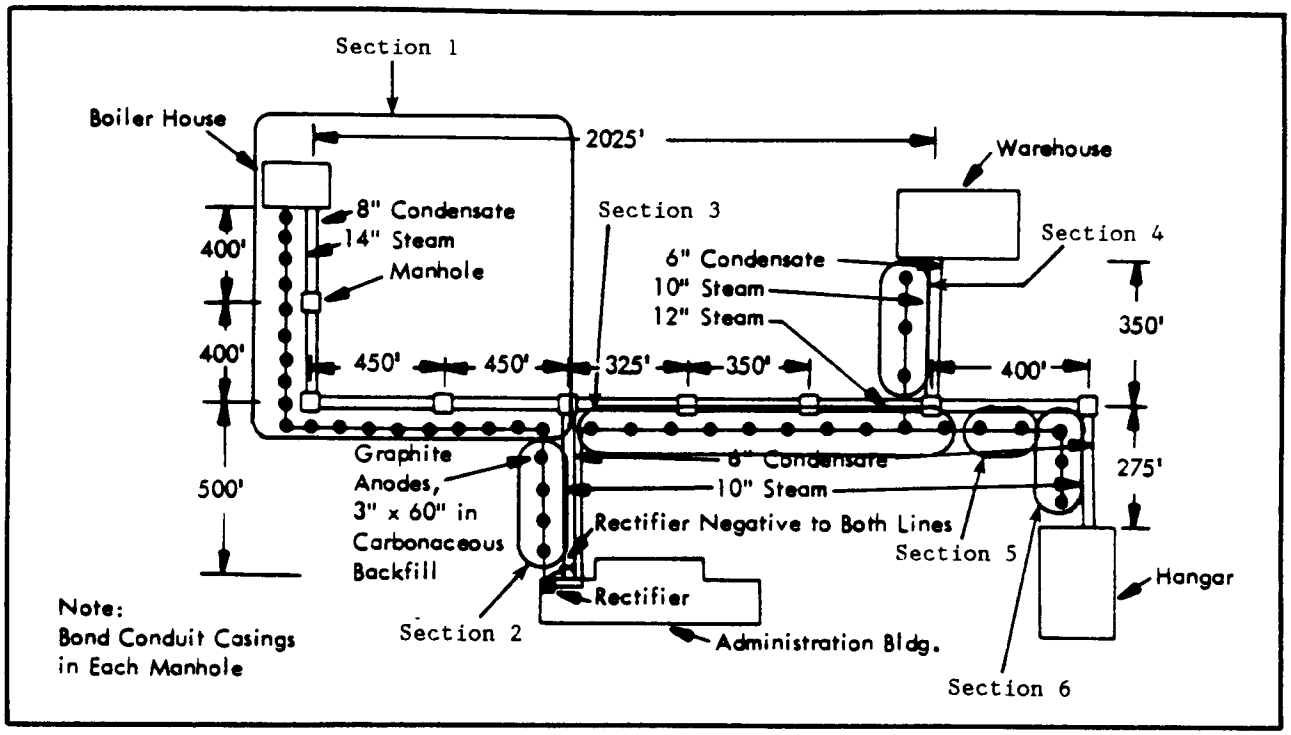

Figure 111
Impressed Current Cathodic Protection for Heating Conduit System

9.8.2 Computations

a) Total outside area of conduit. Because the gauge of the metal from which the conduit is fabricated ranges between 14 and 16, the outside diameter of the pipe is considered to be the same as the inside diameter.

(1) Steam conduit:

Conduit Size (in.)	Conduit Length (ft)	Conduit Area (ft^2/lin ft)	Area of Conduit (ft^2)
14	1,700	3.67	6,239
12	1,125	3.14	3,533
10	1,525	2.62	3,996
		Total area of steam conduit	13,768

(2) Condensate return conduit:

Conduit Size (in.)	Conduit Length (ft)	Conduit Area (ft^2/lin ft)	Area of Conduit (ft^2)
8	1,700	2.09	3,553
6	2,650	1.57	4,161
		Total area of condensate return conduit	7,714
		Total outside area of all conduit	21,482

b) Area of bare pipe to be cathodically protected based on 80 percent coating efficiency:

$A = 21,482 \times 0.2$
$A = 4,296\ ft^2$

c) Maximum protective current required based on 4 mA/ft^2 of bare metal:

$I = 4,296 \times 4$
$I = 17,184$ ma or 17.2 A

d) Maximum weight of anode material for 15 years life:

(1) Graphite anodes are used.

(2) Average deterioration rate of graphite is 2.0 mA/ft^2

(3) Maximum weight of anode material required:

$W = YSI/E$

where

$Y = 15$ years
$S = 2.0\ mA/ft^2$
$I = 17.2$ A
$E = 0.50$ efficiency
$W = 15 \times 2.0 \times 17.2/0.5$ pounds
$W = 1,032$ pounds

9.8.3 Groundbed Design

a) Anode size, 3-inch by 60-inch (backfilled 10-inch by 84-inch) weighing 25 pounds per anode unit.

b) Resistance of a single anode to earth:

$R_V = PK/L$

where

$P = 1,000$ ohm-cm
$L = 7.0$ feet (backfilled size)
$K = 0.0167$, $L/d = 8.4$ (refer to para. 6.2.1.4 a)
$R_V = 1,000 \times 0.0167/7.0$

$R_V = 2.39$ ohms

c) Number of anodes required. The low resistance (2.39 ohms) of a single anode and the large weight of anode material required (1,032 pounds) for a 15-year life indicate that the controlling factor is the amount of anode material, not ground bed resistance. The minimum number of anodes required is:

$$N = 1{,}032/25 = 41.3 \text{ or } 41 \text{ anodes}$$

These are arranged in a distributed ground bed as shown in Figure 111 based on the following estimates:

d) Anode distribution:

(1) Area of conduit in sections 1 through 6:

Section	Length (ft)	Surface Area (ft^2)
1	1,700	3,553 + 6,239 = 9,792
2	500	785 + 1,310 = 2,095
3	1,125	1,766 + 3,533 = 5,299
4	350	550 + 917 = 1,467
5	400	628 + 1,048 = 1,676
6	275	432 + 721 = 1,153

(2) Area of conduit protected by one anode:

$A = 21{,}482/41$

$A = 524\ ft^2/anode$

(3) Division of anodes:

Section 1 - 9,792/524 = 19 anodes
Section 2 - 2,095/524 = 4 anodes
Section 3 - 5,299/524 = 10 anodes
Section 4 - 1,467/524 = 3 anodes
Section 5 - 1,676/524 = 3 anodes
Section 6 - 1,153/524 = 2 anodes

9.8.4 Rectifier Location. Locate the rectifier in front of the administration building as shown in Figure 111. The rectifier is sized after anodes are installed.

9.9 Aircraft Multiple Hydrant Refueling System. Galvanic cathodic protection is designed for a standard aircraft hydrant refueling system as shown in Figure 112. This design is for a system not yet installed.

9.9.1 Design Data

a) Average soil resistivity is 5,000 ohm-cm.

b) Design for 90 percent coating efficiency, based on experience.

c) Design for 15-year life.

d) Design for 1 mA/ft² of bare pipe after polarization.

e) Magnesium packaged type anodes must be used.

f) System is adequately insulated from foreign structures.

g) All pipe was mill-coated with hot applied coal-tar enamel and wrapped with asbestos felt. Coating was tested over the trench for holidays, and defects were corrected. Coating is assumed better than 99.5 percent perfect at installation.

9.9.2 Computations. (See Figure 112)

a) Total outside area of liquid fuel piping serving the hydrant refueling area:

Pipe Size (in)	Pipe Length (ft)	Pipe Area (ft²/ft)
3 (defueling header)	2 x 293 = 586	586 x 0.916 = 537
6 (defueling return)	90	90 x 1.734 = 156
8 (refueling header)	2 x 293 = 586	586 x 2.258 = 1,323
10 (supply line)	90	90 x 2.814 = 253
6 (hydrant laterals)	3 x 960 = 2,880	2,880 x 1.734 = 4,995
Total area of POL pipe in ft²		7,264

b) Area of bare pipe based on 90 percent coating efficiency (coating efficiency deteriorates from 99.5 percent to 90 percent in the 15-year life of the cathodic protection system):

$$A = 7{,}264 \times 0.1$$
$$A = 726 \text{ ft}^2$$

c) Maximum current required based on 1 mA/ft² of bare pipe:

$$I = 1.0 \text{ mA/ft}^2 \times 726 \text{ ft}^2$$
$$I = 726 \text{ mA or } 0.73 \text{ A}$$

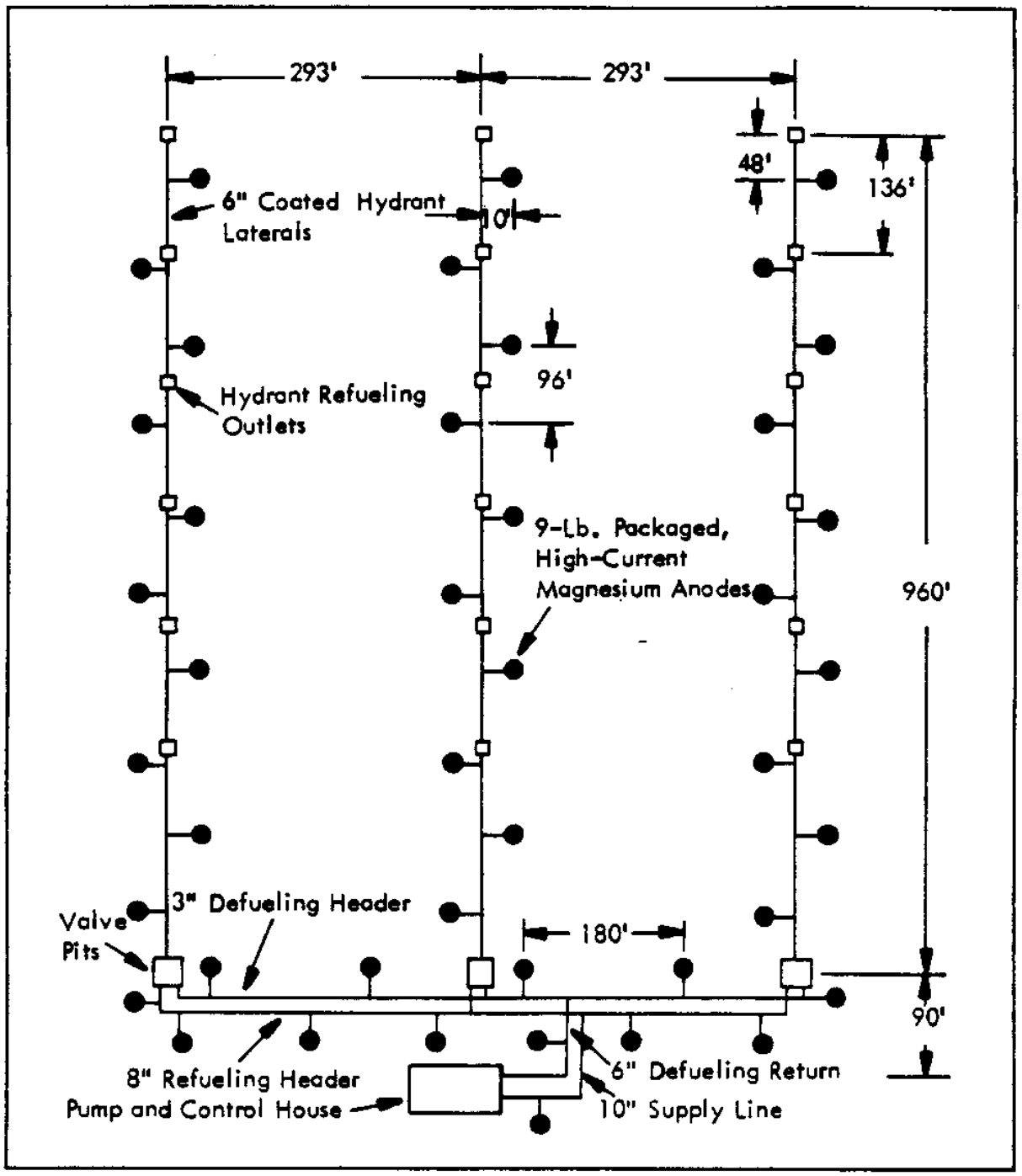

Figure 112
Galvanic Anode Cathodic Protection for Hydrant Refueling System

d) Minimum weight of anode material:

$$W = YSI/E$$

where

Y = 15 years
S = 8.8 lbs/A yr
E = 0.50 efficiency
I = 0.73 A
$W = 15 \times 8.8 \times 0.73/0.50$
W = 193 pounds

It should be noted that the 193 pounds arrived at above is based on an output current of 0.73 A for the full designed life of the cathodic protection system, 15 years. Strictly speaking, this is not the case because the current output following a new installation is much less due to the high coating efficiency. The average current requirement at first may be as low as 0.015 mA/ft² of pipe.

e) Current output of a single 9-pound packaged, "high-potential" magnesium anode:

$$i = Cfy/P$$

where

C = 120,000, constant for magnesium on well-coated structures
f = 0.71, anode size factor (refer to Table 3)
y = 1.00, structure potential factor (refer to Table 4)
P = 5,000 ohm-cm, soil resistivity
$i = 120{,}000 \times 0.71 \times 1.00/5{,}000$
i = 17.0 mA

Because the structure is well coated, the anode spacing is relatively great. Therefore, the multiplying factor for magnesium anode groups is not used.

f) Number of anodes (n):

$$n = I/i$$

where

I = 726 mA, total current required
i = 17.0 mA, current output of one anode
$n = 726/17$
n = 42.7 (use 43 anodes)

g) Anode distribution:

(1) Area of pipe protected by one anode:

A = 7,264/43, total area divided by number of anodes
A = 169 ft^2/anode

(2) Division of anodes:

Laterals	4,994/169	=	30 anodes
Header	1,860/169	=	11 anodes
Supply and return lines	410/169	=	2 anodes

9.10 Steel Sheet Piling in Seawater (Galvanic Anodes). Galvanic anode cathodic protection is provided for a 1,000-foot-long steel sheet piling bulkhead as shown in Figure 113. The well coated bulkhead has been installed and the capability for underwater welding is not available for attachment of the anodes directly to the structure.

9.10.1 Design Data

a) Seawater resistivity - 22 ohm-cm.

b) Soil resistivity on front side of bulkhead - 250 ohm-cm.

c) Soil resistivity on shore side of bulkhead - 1,000 ohm-cm.

d) Design for 0.5 mA/ft^2 for area below high tide level, 0.2 mA/ft^2 in mud at front face of bulkhead, and 0.05 mA/ft^2 in the soil on the shore side of the bulkhead.

e) Type III aluminum anodes, buried at the base of the bulkhead will be used to protect the front side of the bulkhead as direct attachment to the bulkhead by welding is not possible.

f) 50-pound standard alloy magnesium anodes will be used to protect the shore side of the bulkhead.

g) Design for 15-year anode life.

h) The electrical continuity between sections is not reliable and bonding will be required.

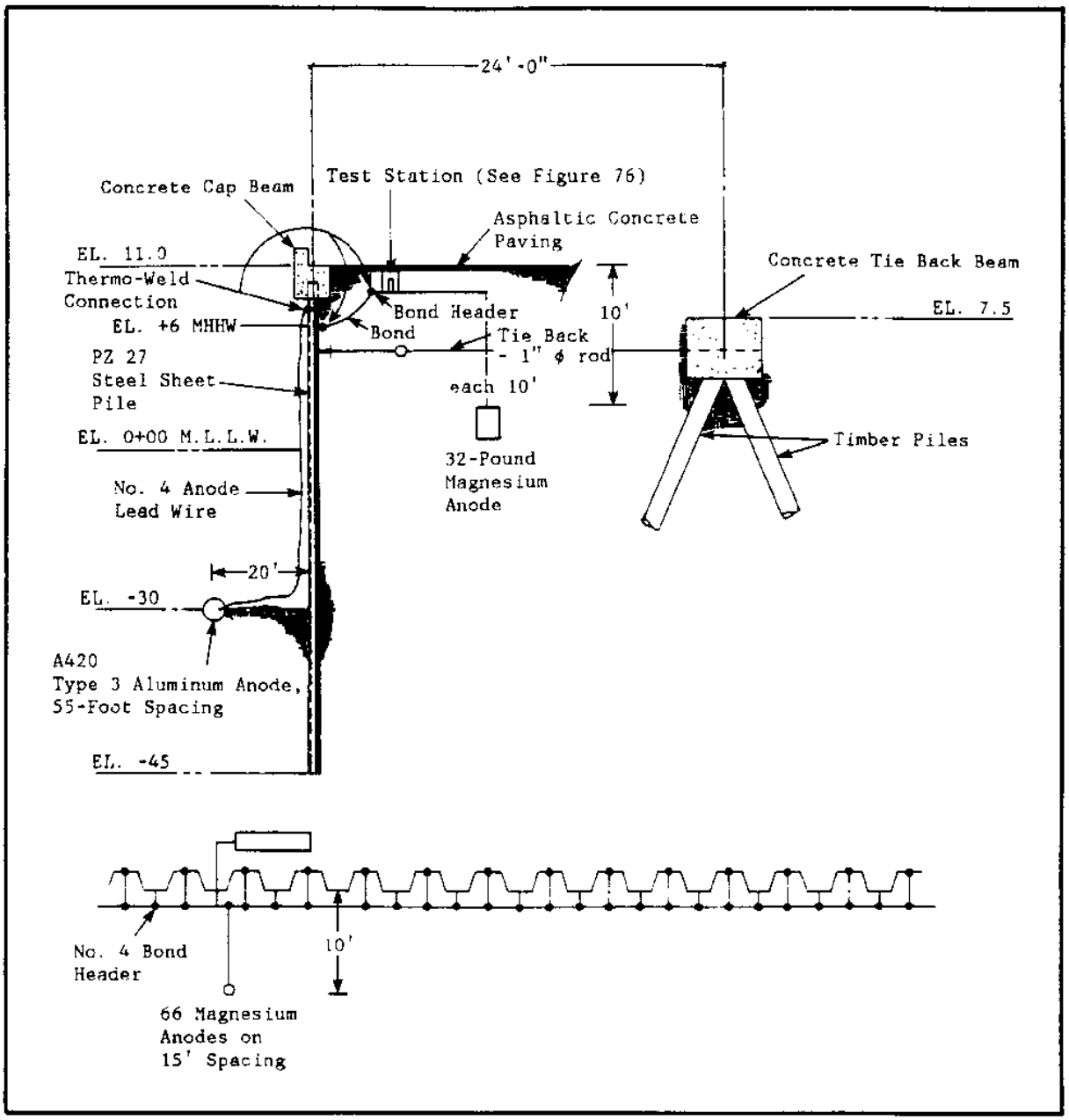

Figure 113
Galvanic Anode Cathodic Protection System for Steel Sheet Piling Bulkhead

9.10.2 Computations

a) Total submerged area of bulkhead:

Area of PZ 27 piling is 2.96 ft^2 per lineal foot per foot of depth

Area in water = 2.96 x 36 x 1,000 = 106,560 ft^2

Area in mud (front) = 2.96 x 15 x 1000 = 44,400 ft^2

Area on shore side =

sheet piling: 2.96 x 56 x 1000 = 165,760 ft^2
tie backs: 1" diam x 3.14/144 $in^2./ft^2$ x 24' long x 100 = 365 ft^2

total = 165,760 + 365 = 166,125 ft^2

b) Protective current required on front side:

in water - 106,560 ft^2 x 0.5 mA/ft^2 = 53.28 A

in mud - 44,400 ft^2 x 0.2 mA/ft^2 = 8.88 A

total - 53.28 + 8.88 = 62.16 A

c) Protective current required on shore side:

166,125 ft^2 x 0.05 mA/ft^2 = 8.3 A

d) Output from Type A420 Type III aluminum alloy anodes is 4.75 A (refer to Table 24).

Number of anodes required for current output:

$$N = I/i$$

where

N = number of anodes required
I = current requirement (A)
i = output per anode (A)
N = 62.16/4.75
N = 13.08 (say 13)

e) Minimum weight of anodes required for 15 year life:

W = YSI

where

W = weight of anodes required
Y = 15 years
S = 7.6 lbs/A yr (in this case includes efficiency factor)
I = 62.16 A
W = 15 x 7.6 x 62.16 = 7086

Each anode weighs 365 pounds, thus for the desired system life, the required number of anodes is:

7086/365 = 19.4 (say 20)

There is an option to either select anodes with less output per pound of material or use 20 anodes. Conservative design using 20 anodes was selected.

f) Output from 32-pound magnesium anodes on shore side:

i = Cfy/p

where

i = current output in mA
C = 120,000 constant for well coated structures using magnesium
f = 1.06 anode size factor (refer to Table 3)
y = 1.0 structural potential factor (refer to Table 4)
p = 1,000 ohm-cm, soil resistivity
i = (120,000 x 1.06 x 1.00)/1,000
i = 127.2 mA

g) Number of anodes required for current output:

N = I/i

where

N = number of anodes required
I = current requirement (A)
i = output per anode (A)
N = 8.3/0.127
N = 65.35 (say 66 anodes)

h) Minimum weight of anodes required for 15-year life.

W = YSI/E

where

W = weight of anodes required
Y = 15 years
S = 8.8 lbs/A yr
I = 8.3 A
E = 60% anode efficiency (see Figure 73)
W = (15 x 8.8 x 8.3)/60%
W = 1826

As shown below, the system can be limited either by anode output or anode weight. Sixty-six anodes each weighing 32 pounds have a total weigh of 2,080 pounds and will thus provide the desired anode life. Fifty 32-pound anodes weigh 1,600 pounds, thus the system will be limited by the weight of the anodes for the desired system life.

9.11 Steel Sheet Piling in Seawater (Impressed Current). The same installation as described in para. 9.10 is to be protected using an impressed current system.

9.11.1 Design Data. Structure and environment are identical to those in para. 9.10.

a) Sled-mounted HSCBCI anodes are to be used for the front side of the bulkhead.

b) Vertical HSCBCI anodes are to be used on the shore side of the bulkhead.

c) Separate rectifiers are to be used for the front and shore sides of the piers. Electric power 120/240 V ac is available at locations along bulkhead.

d) Anode bed resistances must not exceed 2 ohms.

9.11.2 Computations

a) Anode sled design (seawater side):

Select 2- by 60-foot anode as shown in Figure 89.

Since the anode will be immersed in water, the formula for a vertical anode can be used:

$$R = (P/L)/K$$

where

R = electrolyte-to-anode resistance for a single horizontal anode
P = 250-ohm centimeter soil resistivity
L = 5-foot anode length
K = 0.0234 factor for length to diameter (refer to para. 6.2.1.4)
R = (250/5) x (0.0234)
R = 1.17

b) Minimum weight of anodes required for 15-year life (front side):

W = YSI

where

W = weight of anodes required
Y = 15 years
S = 1 lbs/A yr (in this case includes efficiency factor)
I = 57.13 A
W = 15 x 1 x 57.13 = 857 pounds

Each anode weighs 44 pounds, thus for the desired system life, the required number of anodes is:

857/44 = 19.5 (say 20)

c) Number of anodes required for current output (front side):

N = I/i

where

N = number of anodes required
I = current requirement (A)
i = output per anode (A)
N = 57.3/1.5
N = 38.2 (say 40)

Thus, the number of anodes will be limited by the output per anode.

d) Resistance of dc circuit. Resistance of the anodes is negligible because the 40 anodes, each with a resistance of 1.17 ohms, will be in parallel. Resistance of the feeder conductor (1,000 feet of HMWPE Size #4) is 0.254 ohms (refer to Table 10). Resistance of the 1,000-foot #4 bond header is also 0.254 ohms:

R_f = 0.254 ohms

R_n = 0.254 ohms

$R_t = R_f + R_n$ = 0.508 ohms

e) Sizing rectifier requirements:

dc current - 57.13 A
Anode circuit resistance - 0.508 ohms
dc voltage = IR = 57.13 x 0.508 = 29 V

A standard rectifier in this range has an output of 90 A at 42 V.

f) Anode bed design (shore side):

Select 2- by 60-foot anodes.

For current distribution, a distributed anode system should be used.

Compare resistances of single anodes with and without backfill:

Without backfill:

$$R = (P/L)K$$

where

R = electrolyte-to-anode resistance for a single vertical anode.
P = 1,000-ohm cm soil resistivity
L = 5-foot anode length
K = 0.0234 factor for length to diameter (refer to para. 6.2.1.4)
R = (1000/5)0.0234
R = 4.68

With 10-inch diameter backfill in hole:

$$R = (P/L)K$$

where

R = electrolyte-to-anode resistance for a single vertical anode
P = 1,000-ohm cm soil resistivity
L = 10-foot backfill length
K = 0.0186 factor for length to diameter (refer to para. 6.2.1.4)
R = (1,000/10)0.0186
R = 1.86 ohms

Since backfill is required to reduce the resistance below 2 ohms, backfill is required.

g) Minimum weight of anodes required for 15-year life (shore side).

$$W = YSI$$

where

W = weight of anodes required
Y = 15 years
S = 1 lbs/A yr (in this case includes efficiency factor)
I = 8.3 A
W = 15 x 1 x 8.3 = 124.5 pounds

Each anode weighs 44 pounds, thus for the desired system life, the required number of anodes is:

124.5/44 = 2.8 (say 3)

h) Number of anodes required for current output (shore side):

N = I/i

where

N = number of anodes required
I = current requirement (A)
i = output per anode (A
N = 8.3/1.5
N = 5.5 (say 6)

Thus, the number of anodes will be limited by the output per anode.

i) Resistance of dc circuit:

Resistance of six anodes is:

1/R = 1/1.86 + 1/1.86 + 1/1.86 + 1/1.86 + 1/1.86 + 1/1.86

R = 0.310 ohms

Resistance of feeder conductor 1,000 feet of HMWPE Size #4 (0.254 ohms per M feet) (refer to Table 10):

R = 0.254

Total resistance = 0.254 + 0.310 = 0.564 ohms.

j) Sizing rectifier (shore side):

Requirements:
dc current - 8.3 A
Anode circuit resistance - 0.564 ohms
dc voltage = IR = 8.3 x 0.564 = 4.68 V

A standard rectifier in this range has an output of 12 A at 6 V. Typical installation of this system is shown in Figure 114.

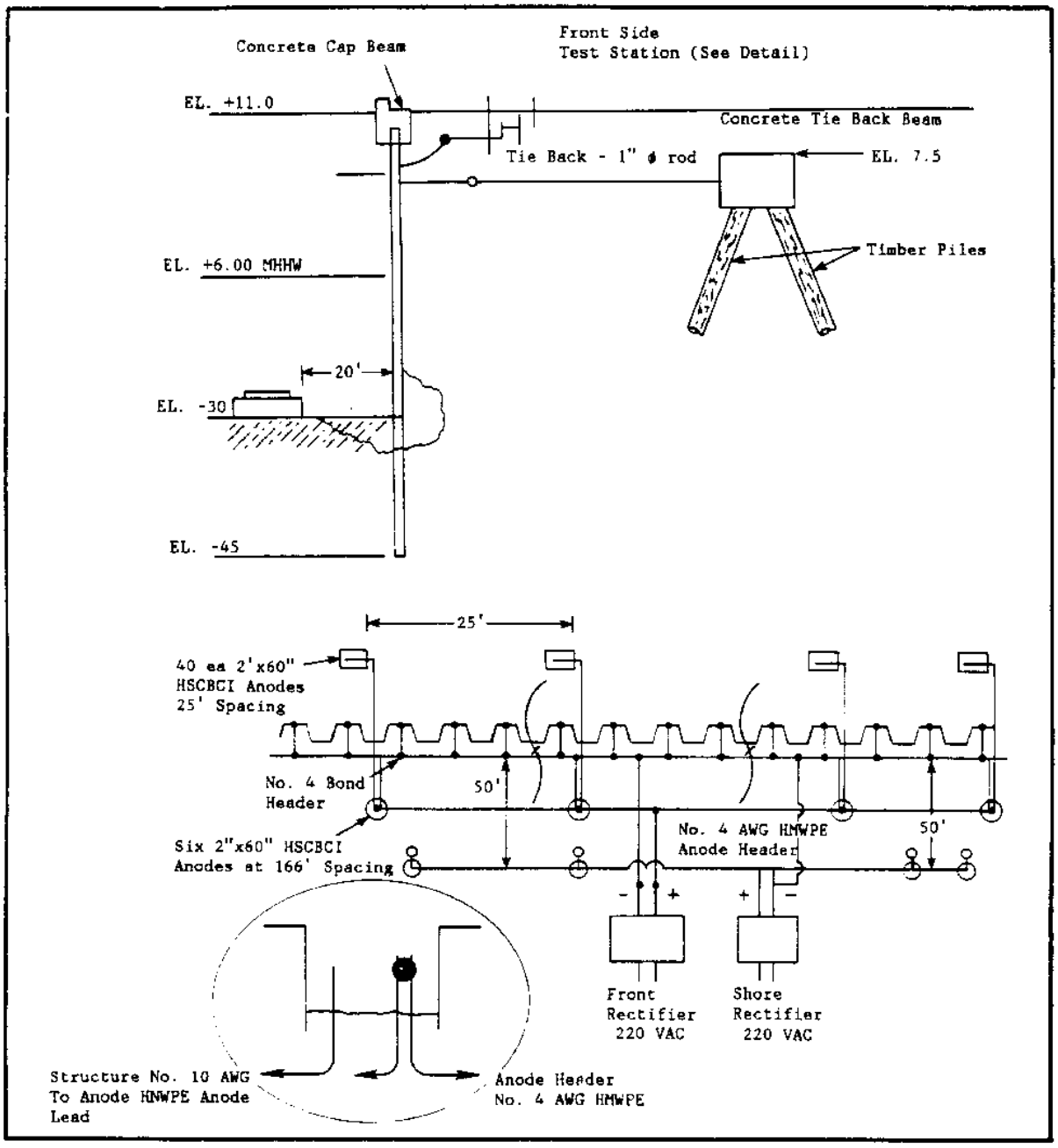

Figure 114
Impressed Current Cathodic Protection System
for Steel Sheet Piling Bulkhead

9.12 Steel H Piling in Seawater (Galvanic Anodes). Galvanic anode catho protection is provided for a 200-foot-long, 30-foot-wide pier supported b piling as shown in Figure 115. The pilings are coated to the low tide le but are uncoated below the low tide level. A system which can be install and maintained without divers is desired.

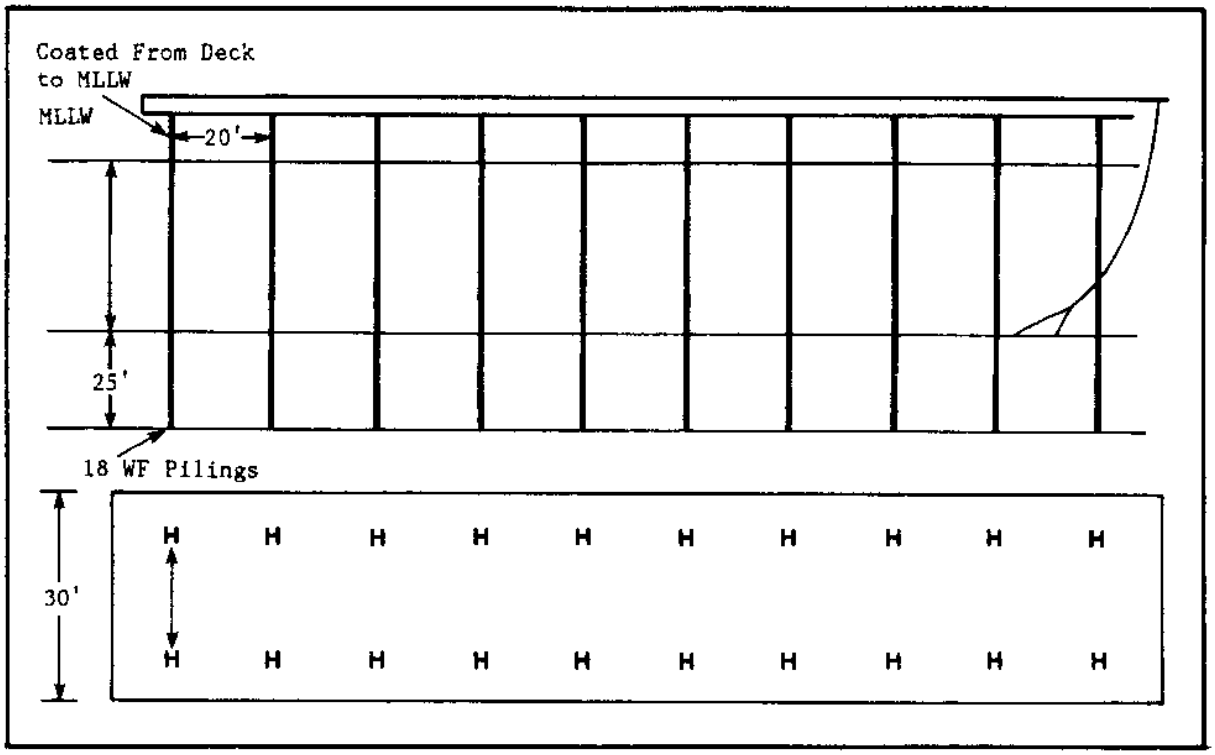

Figure 115
Pier Supported by H Piling for Para. 9.12

9.12.1 Design Data

a) Seawater resistivity - 22 ohm-cm.

b) Design for 2 mA/ftÀ2Ù between low tide level and the bottom, 1 mA/ftÀ2Ù in the mud.

c) Type I aluminum anodes, suspended from the pier deck will be used.

d) The structure-to-electrolyte potential for the protected structure will be -850 mV.

e) Design for 10-year anode life.

f) Electrical continuity between piling and the deck reinforceme is good and no additional bonding will be required.

9.12.2 Computations

a) Total submerged area of pilings:

Area of 18 WF pilings is 7 ftÀ2Ù per lineal foot

Area in water = 20 x 40 x 7 = 5,600 ft^2

Area in mud = 20 x 25 x 7 = 3,500 ft^2

b) Protective current required:

In water - 5,600 ft^2 x 2 mA/ft^2 = 11.2 A

In mud - 3,500 ft^2 x 1 mA/ft^2 = 3.5 A

Total = 14.7 A

c) Minimum weight of anodes required for 10-year anode life:

$$W = YSI$$

where

W = weight of anodes required
Y = 10 years
S = 7.6 lbs/A yr (includes efficiency factor)
I = 14.7 A current required
W = 10 x 7.6 x 14.7 = 1,117.2 pounds

As there are 10 bents it is desirable for current distribution to have at least one anode per bent. Thus, 120-pound anodes should be used if the current output per anode is sufficient.

d) Current output per anode:

Resistance of a single vertical anode (refer to para. 6.2.1.4)

$$R_V = (P/L)K$$

where

R_V = electrolyte-to-anode resistance
P = electrolyte resistivity
L = anode length
K = shape function

For A-120 anodes (refer to Table 22)

$$R_V = 22/1(0.008) = 0.176 \text{ ohms}$$

For A-120-1 anodes (refer to Table 22)

$$R_V = 22/2(0.012) = 0.132 \text{ ohms}$$

For A-120-2 anodes (refer to Table 22)

$$R_V = 22/4(0.017) = 0.093 \text{ ohms}$$

Current output for each anode type:

For A-120

$I = E/R = 0.25/0.176 = 1.42$ A

For A-120-1

$I = E/R = 0.25/0.132 = 1.89$ A

For A-120-2

$I = E/R = 0.25/0.132 = 2.69$ A

As the required output from each anode is 1.47 A, the A-120-1 anodes should be selected. The anodes should be installed in a manner similar to that shown in Figure 79.

9.13 Steel H Piling in Seawater (Impressed Current). The same structure as in para. 9.12 is to be protected using an impressed current system.

9.13.1 Design Data

a) Seawater resistivity - 22 ohm-cm.

b) Design for 2 mA/ft² between low tide level and the bottom, 1 mA/ft² in the mud.

c) HSCBCI anodes, suspended from the pier deck, will be used.

d) The structure-to-electrolyte potential for the protected structure will be -850 mV.

e) Electrical continuity between piling and the deck reinforcement is good and no additional bonding will be required.

9.13.2 Computations

a) Total current requirement will be the same as in para. 9.12:

Total = 14.7 A

b) As in the previous example, one anode will be used per bent for proper current distribution. The resistance of a single anode is:

Resistance of a single vertical anode (refer to para. 6.2.1.4)

$$R_V = (P/L)K$$

where

R_V = electrolyte-to-anode resistance

P = electrolyte resistivity
L = anode length
K = shape function

For 2- by 60-inch anodes:

R_V = 22/5(0.0234) = 0.103 ohms

c) Weight of anodes required:

W = YSI

where

W = weight of anodes required
Y = 10 years
S = 1 lbs/A yr (includes efficiency factor)
I = 14.7 A current required
W = 10 x 1 x 14.7 = 147 pounds

Each 2- by 60-inch anode weighs 44 pounds, thus ten anodes would have a life significantly longer than 10 years.

d) Resistance of dc circuit:

The resistance for ten widely spaced anodes is

1/R = 1/0.103 + 1/0.103 + 1/0.103 + 1/0.103 + 1/0.103 + 1/0.103 + 1/0.103
1/0.103 + 1/0.103 + 1/0.103

R = 0.010 ohms

Resistance of feeder conductor: 200 feet of HMWPE Size #4 (0.254 ohms per M feet) (refer to Table 10):

R = 0.254 x 0.2 = 0.05 ohms

e) Sizing of rectifier:

Requirements:

dc current - 14.7 A
Anode circuit resistance - (0.01 + 0.05) = 0.06
dc voltage = IR+3 = (14.7 x 0.06) +3 = 3.882 (say 4)

A standard rectifier in this range has an output of 18 A at 4 V. Figure 88 shows a typical installation of impressed current anodes on a pier structure.

THIS PAGE INTENTIONALLY LEFT BLANK

Section 10: INSTALLATION AND CONSTRUCTION PRACTICES

10.1 Factors to Consider. Cathodic protection systems, and the structure to be protected, must be properly installed in order for effective protection to be achieved. NACE Standards RP-02-85 and RP-01-69 include guidelines for installation of such systems.

Particular attention should be paid to maintaining the condition of the coating on the structure and maintaining the structural continuity and isolation required for proper cathodic protection system operation. If the coating on a structure is damaged (or absent), cathodic protection requirements will increase dramatically. A well-coated structure will often require only 1 percent or less of the current required to protect the same structure if bare. Sacrificial anode systems, which cannot be easily adjusted to provide increased current output, are the most susceptible to poor performance if the coating system does not meet original specifications. Open bonds and shorts to other structures are common causes of inadequate protection and the resulting interference can cause accelerated corrosion damage. Careful inspection during the entire construction process, both of the cathodic protection system and of the structures to be protected are vital to the successful application of cathodic protection.

10.2 Planning of Construction. The most important factor in the planning of construction of facilities that include cathodic protection is the planning of inspections to insure that coatings are properly applied and not damaged during construction, and that proper isolation and bonding are achieved. For buried structures, these inspections must be performed before backfilling. Once the structure or other system components are buried, identification and correction of any discrepancies is difficult.

10.3 Pipeline Coating. Interference problems are severe for long structures such as pipelines. It is highly desirable to reduce the amount of current required to protect pipelines to the lowest levels possible. High quality coatings, properly selected and applied, and installation of the line without damaging the coating is vital to achieving protection at the low current levels desired. Often, coating application and prevention of damage during installation are more important than the materials used.

10.3.1 Over-the-Ditch Coating. Over-the-ditch coating systems have the advantage of reducing handling of the coated pipe before installation. Over-the-ditch coating is best used when long sections of pipeline are to be installed in open areas under mild weather conditions. Depending on curing time for the coating, the pipe may either be lowered directly into the ditch after coating or may be held on skids until the coating is properly cured before lowering it into the ditch. If the pipe is lowered into the ditch directly after coating, the inspector should electrically inspect each section using a holiday detector or "jeep" immediately before backfilling. If the pipeline is held on skids, the skids should be padded to prevent coating damage. Damage caused by skids must be patched before inspection of the coating, lowering of pipeline into the ditch, and backfilling.

10.3.2 Yard Applied Coating. The use of yard or mill applied coatings is preferred over field applied coatings since better surface preparation and

application are normally achieved under the more controlled conditions at a stationary plant. The coating should be inspected upon receipt at the construction site when unloading. Inspections should be performed immediately prior to placing the pipe in the ditch after all joint and field patches have been made.

10.3.3 Joint and Damage Repair. Joints and field repairs should be made with coatings compatible with the primary coating system used. Joints and field patches should be carefully inspected before placing the pipe in the ditch.

10.3.4 Inspection. Electric Holiday Detectors should be used for all coating inspections. If properly used they can detect flaws in the coating which may not be visible. In addition to the use of the Holiday Detector, the inspector should also make detailed visual inspection of the coatings and occasional measurements of the bond strength. Visual inspection should also include observation of the following:

a) surface preparation and coating - if practical

b) handling of the pipe

c) lowering of the pipe into the ditch

d) backfilling operations

Any material, even the highest quality, when applied and handled carelessly will perform poorly, but a marginal quality material will perform well when carefully applied and installed.

10.4 Coatings for Other Structures. Coatings on other structures are equally critical when the cathodic protection system relies on the quality of the coating to achieve protective potentials with the available system current. Inspections during surface preparation, coating, handling, placement, and backfilling are vital to the performance of the overall system.

10.5 Pipeline Installation. The use of casings to give mechanical protection to the pipeline at grade crossings, etc., is sometimes required by law, code, or physical condition. The use of casings should be avoided wherever possible due to the difficulty of protecting the pipeline within the casing and difficulties in maintaining isolation between the casing and the pipeline. The use of proper techniques when foreign pipeline crossings are made is necessary to minimize interference. Insulating joints should be properly installed. Effectiveness is achieved using adequate test and bonding stations.

10.5.1 Casings. Casings should be uncoated. The casing should be isolated from the pipeline with insulators and cradles which must be properly installed. The annular space at the ends of the casing should be sealed to prevent the entry of moisture between the casing and pipe. Extra thickness of coating on the pipeline for the section to be placed inside the casing may be required in order to prevent damage to the coating when the pipe is pulled into the casing. The annular space between the casing and the pipe must be kept dry until it is sealed. Casing-to-pipe resistance should be measured. A

test station should be installed at the casing for future measurements. Figure 116 shows a test station for casing isolation testing.

10.5.2 Foreign Pipeline Crossings. Newly installed pipelines are common installed under existing lines. The owner of the foreign line should be contacted to obtain permission to install test leads and possibly to coat short section of the foreign line. Since solutions to problems at foreig crossings require cooperative efforts, effective coordination is essentia As discussed in Section 13 of this handbook, corrosion coordinating committees have been established in many areas to facilitate coordination such efforts. Clearance of 2 feet between all lines at crossings is recommended. If 1-foot clearance cannot be obtained, the use of an insulating mat as shown in Figure 63 is required. Direct contact between lines should be avoided at almost any cost. Installation of insulating m at crossings is recommended if substantial earth currents are detected in the area or if a new coated line is crossing a poorly coated or uncoated line. Installation of test stations with provisions for bonding at all crossings is essential.

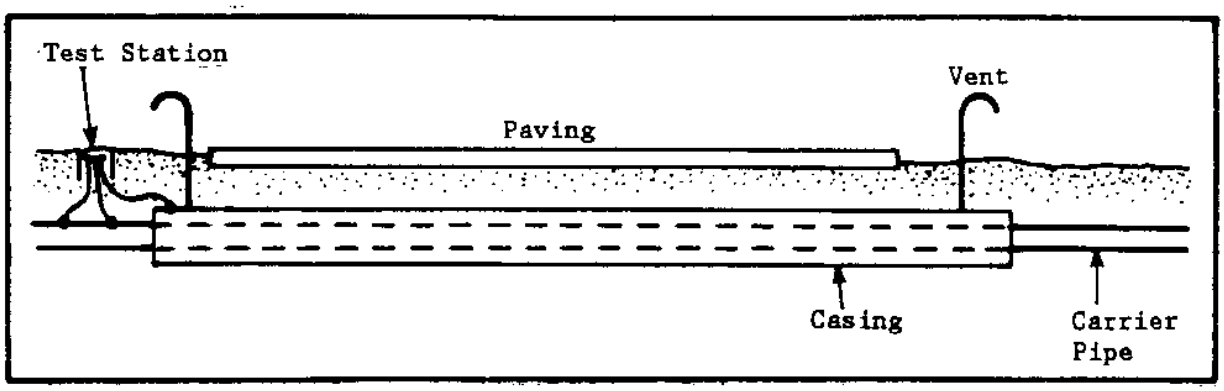

Figure 116
Test Station for Under-Road Casing Isolation

10.5.3 Insulating Joints. Insulating, or isolating joints must be selec so that the materials are compatible with the service environment. Isolation of steam conduits is especially troublesome. Isolating couplin must be properly assembled and tested to insure that they will be effecti When used on welded pipelines, short "spools" of pipe should be welded to each flange. The flange should then be assembled and the section welded into the pipeline. This will prevent mechanical damage to the insulating joint associated with misalignment. Flanges should be tested with a radi frequency type insulation checker after assembly to insure that they have been properly assembled. Effectiveness of buried flanges must be verifie by impressing a

potential on one side of the flange and measuring the change in potential on the other side of the flange. If little or no potential change is noted, the isolating flange is effective. Test stations with provisions for future bonding should be installed at each buried insulating flange.

10.5.4 Bonds. Bonds between structure sections and to foreign structures should be made with No. 4 AWG, 7-strand insulated cable unless larger cable is required. Each bond should be brought into a test station to determine bond effectiveness and to install resistive bonds if required.

10.6 Electrical Connections. Electrical connections to the structure are commonly made using thermo-weld techniques. The connections should be inspected visually before and after insulation is applied. If safety or other conditions preclude the use of the thermo-weld process on site, the leads should be attached to metal tabs by thermo-welding and the tabs either soldered or mechanically attached to the structure. All electrical connections should be insulated. Other electrical connections should be thermo-welded where practical as this method of connection is extremely reliable. Mechanical connections should be of the proper type for the intended use and should be properly assembled. All connections should be inspected before and after insulation.

10.7 Test Stations. As described in paras. 6.7.3 and 7.10.4, test stations are required for initial test and adjustment of the cathodic protection systems, and for future inspection and maintenance. Attachment of "spare" test leads to buried structures is recommended as excavation to reconnect test leads is expensive. All test station leads should be either color coded or labeled with a metal or plastic tag. The connections to the structure should be inspected prior to burial of the structure. Whenever the structure will be located under a paved area, or whenever paving is installed over a protected structure, soil contact test stations as shown in Figure 56 should be installed.

10.8 Sacrificial Anode Installation. Sacrificial anodes should always be installed at least 3 feet below grade whenever possible. The top of the anode should be at least as deep as the structure to be protected. Horizontal sacrificial anode installations should be used only if obstructions such as rock outcrops preclude vertical installations. Anodes suspended in water should be installed according to the system design and a cable connection between the structure and the suspension link is normally required. Anode lead wires should never be used to suspend, carry, or install the anode.

10.8.1 Vertical. As shown in Figure 117, sacrificial anodes are commonly installed vertically in augered holes. If caving or unstable soil conditions are encountered, a thin metal (stovepipe) casing may be used. Anodes should be located on alternating sides of the pipe when possible to reduce interference and allow for more even current distribution. Any impermeable wrapping should be removed from packaged anodes prior to placing them in the holes. The cloth bag used with packaged anodes should be carefully handled as loss of backfill will result in reduced anode output. The anodes should be lowered into the holes either by hand, or by the use of a line attached to either the anode, if bare, or the top of the bag of backfill. The anode lead cable should not be used to lower the anode into the hole as the anode-to-cable connection is easily damaged. Sufficient slack should be left in the

anode cable to prevent strain on the cable. All connections should be properly made and inspected before the installation is buried. If packaged anodes are not used and special backfill is required, it should be poured into the holes as the anodes are installed. Anode holes should be backfilled with fine soil free of stones or other debris. Sand should not be used. The backfill should be placed in 6-inch lifts and each lift tamped into place to eliminate voids.

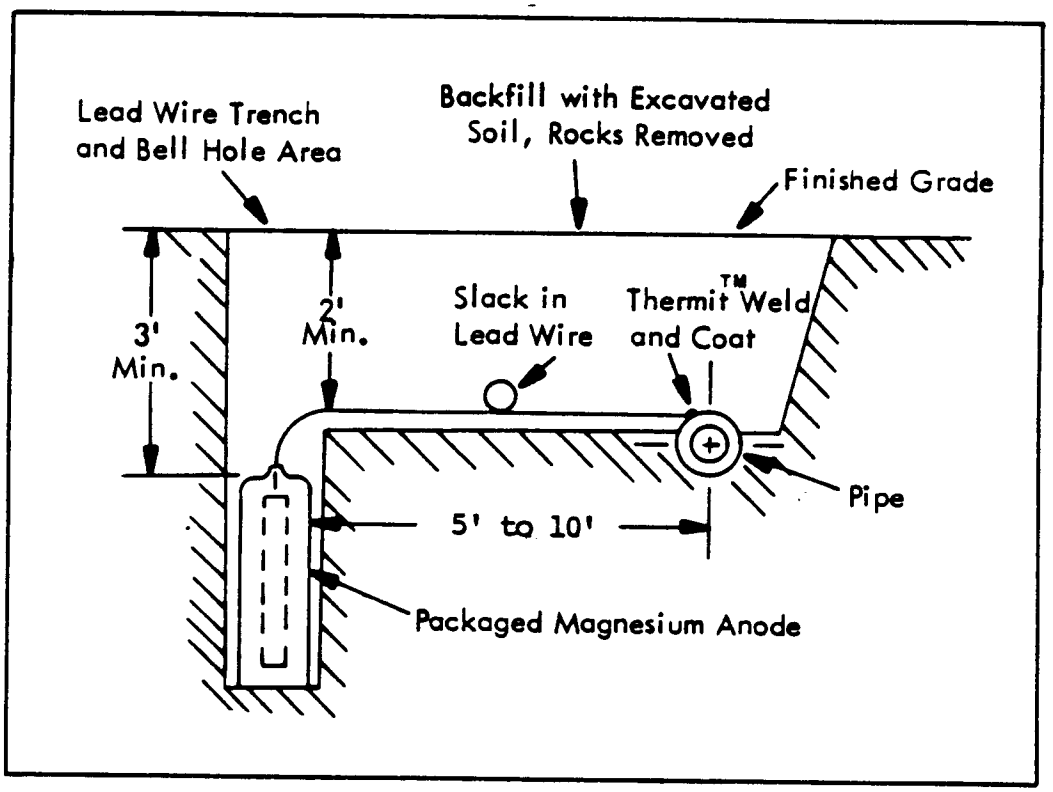

Figure 117
Vertical Sacrificial Anode Installation

10.8.2 Horizontal. Horizontal installation of sacrificial anodes is sometimes required due to obstructions or to limitations in right of way. Where obstructions are encountered, the anode may be installed as shown in Figure 118. Where right of way problems are encountered, the anodes may be installed vertically below the pipe or structure as shown in Figure 119.

10.9 Impressed Current Anode Installation. Selection of sites for the rectifiers, anode beds, test stations, and other components of an impressed current cathodic protection system should be made during the system design. As in the case of sacrificial anode systems, impressed current systems must be carefully installed in order to operate properly and reliably. The most common type of impressed current anode installation is vertical. Horizontal installations are sometimes used if obstructions are encountered or if near surface soil resistivities are sufficiently low. Deep well anode installations are used to reduce interference effects or to reach low resistivity soil. Anode lead wires should never be used to suspend, carry, or install anode.

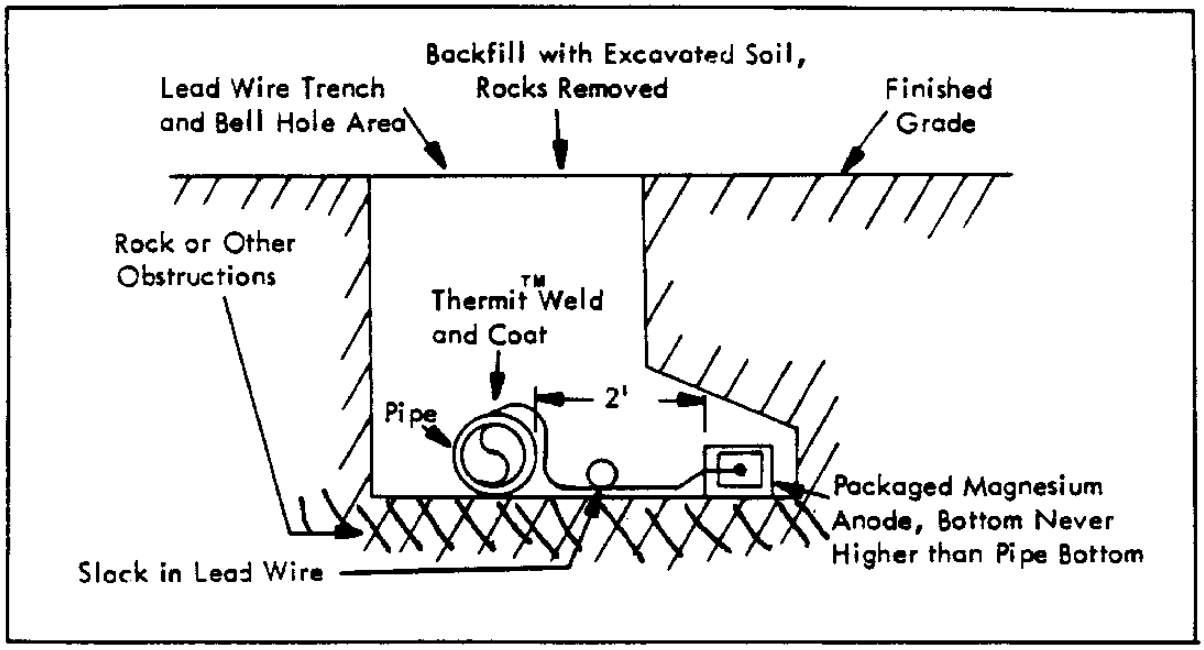

Figure 118
Horizontal Sacrificial Anode Installation When
Obstruction is Encountered

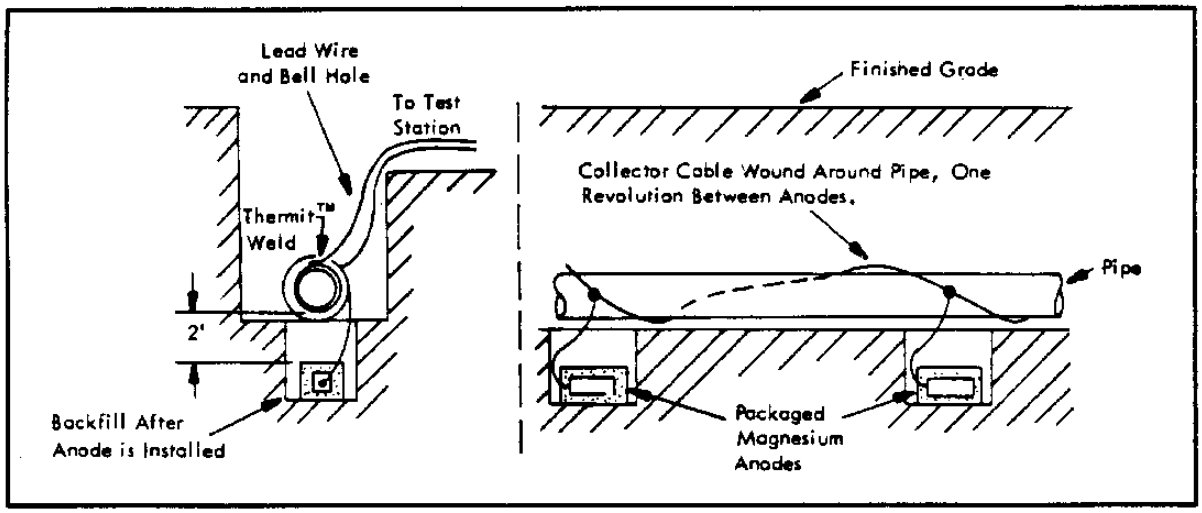

Figure 119
Horizontal Sacrificial Anode Installation -
Limited Right-of-Way

10.9.1 Vertical. This is the most common type of impressed current anode installation. Both graphite and HSCBCI anodes are brittle and must be carefully handled to prevent breakage. The anode cable is particularly prone to failure if the insulation is damaged in any way and particular care must be exercised in handling the anode leads. As impressed current cathodic protection anodes are generally longer than sacrificial anodes, excavation of holes for them is often more difficult. "Jetting" of bare anodes is sometimes possible in sandy soils using equipment specially designed for this purpose. If caving of the hole is encountered, either the use of a packaged "canned" anode complete with backfill, or a thin metal "stovepipe" casing may be necessary. If bare anodes are used, the backfill should be added as soon as the anodes are placed. The backfill should be well tamped to insure good contact with the anode. The backfill should be used to fill the hole to within a few inches of grade unless coarse gravel is available for this purpose. This is to allow the gasses generated during system operation to be properly vented. A typical vertical anode installation using a bare HSCBCI anode with backfill is shown in Figure 120. A typical vertical installation of a "canned" HSCBCI anode is shown in Figure 121.

10.9.2 Horizontal. Horizontal installations of impressed current anodes are less expensive than vertical anodes. Horizontal installations may be necessary when obstructions or other soil conditions make augering of deep holes difficult. Horizontal installations are also used where soil resistivities are very low and the increased resistance of the horizontal installation is not significant. A typical horizontal installation of a HSCBCI anode is shown in Figure 122. A minimum of 2 feet of burial for all cables and 3 feet of burial for the anode is recommended. The excavation should be partially filled with backfill before the anode is placed. After the anode is placed, the remainder of the backfill should be added and tamped into place. If backfill is not required, soil free from stones or debris should be used to fill the excavation. Again, it must be remembered that impressed current anodes, and particularly the anode leads, are susceptible to damage and must be handled carefully.

10.9.3 Deep Anode Beds. In some installations where interference problems are severe, anode beds are sometimes installed deep below the surface. This causes the current flow to become more vertical and reduces interference between horizontally displaced structures. Deep anodes are also used where the resistivity of the soil near the surface is high. Anodes installed deeper than 50 feet are called "deep" anodes. Specialized equipment and skill is required for the installation of such an anode array. Installation of deep anode systems is described in NACE Standard RP-50-72. Type TAD HSCBCI or center tapped 3- by 60-inch graphite are suitable for such installations. Newly developed deep anode systems using platinized anodes show considerable promise for such applications. A typical deep anode system using HSCBCI anodes is shown in Figures 123 and 124.

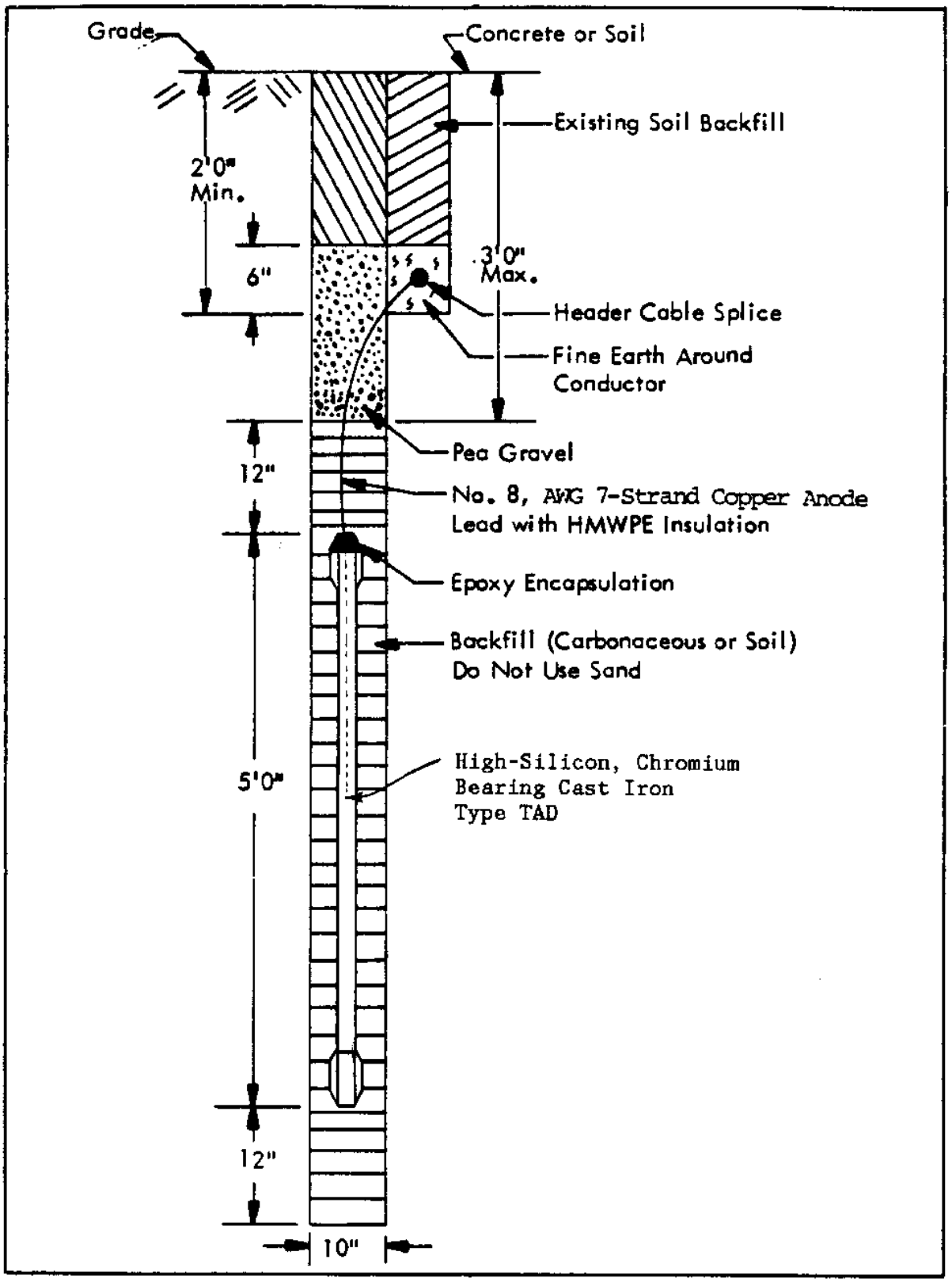

Figure 120
Vertical HSCBCI Anode Installation

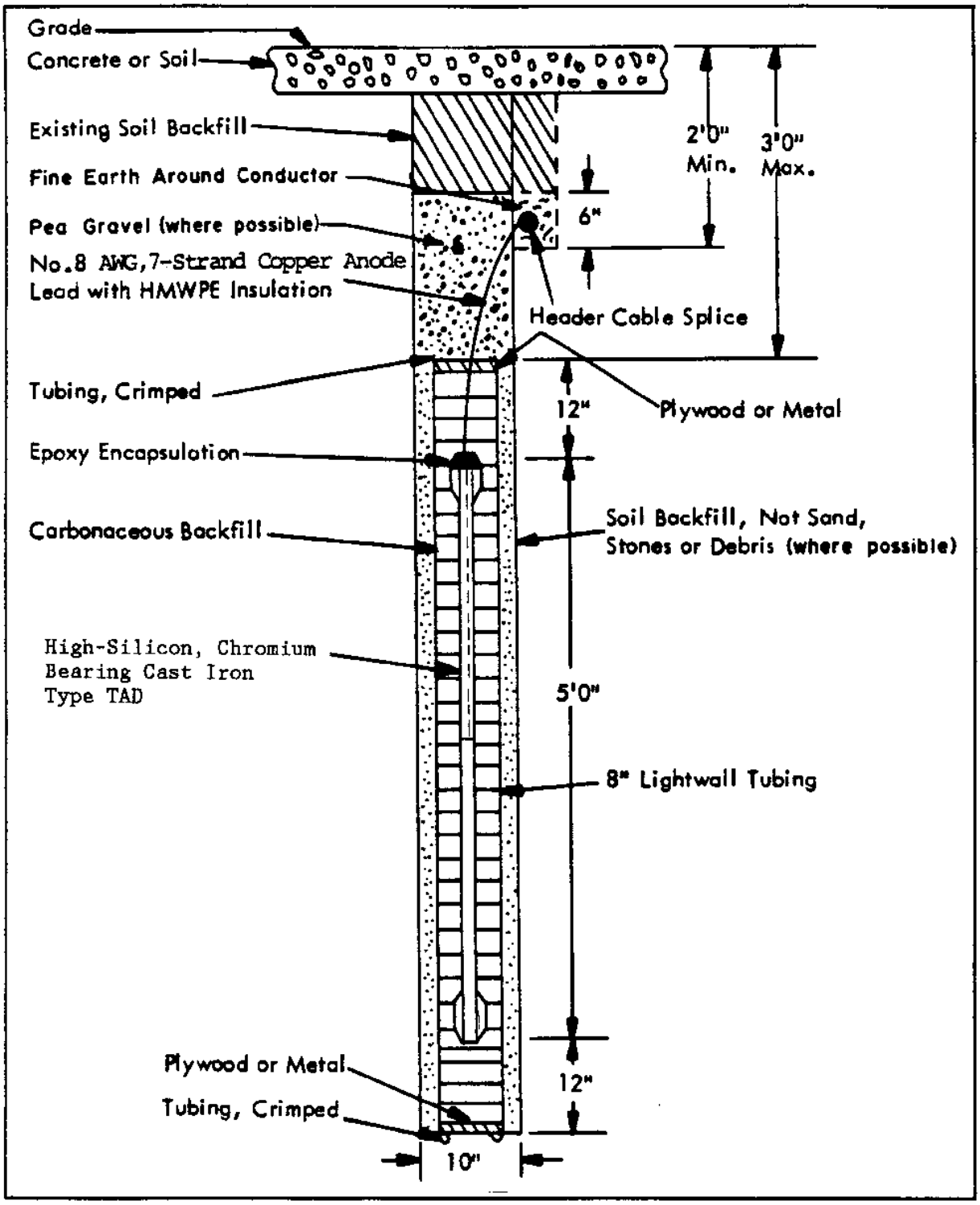

Figure 121
Vertical HSCBCI Anode Installation With Packaged Backfill

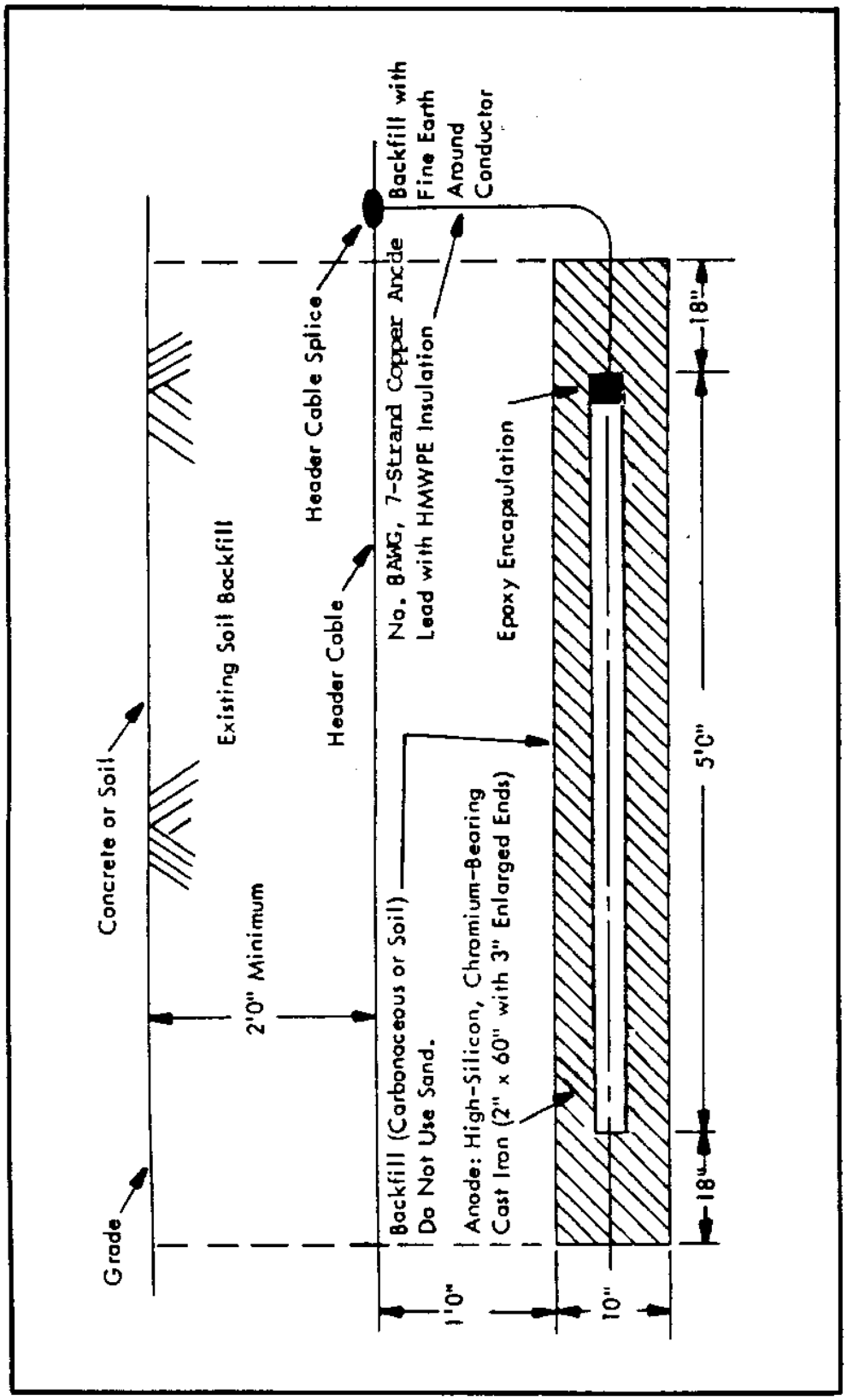

Figure 122
Horizontal HSCBCI Anode Installation

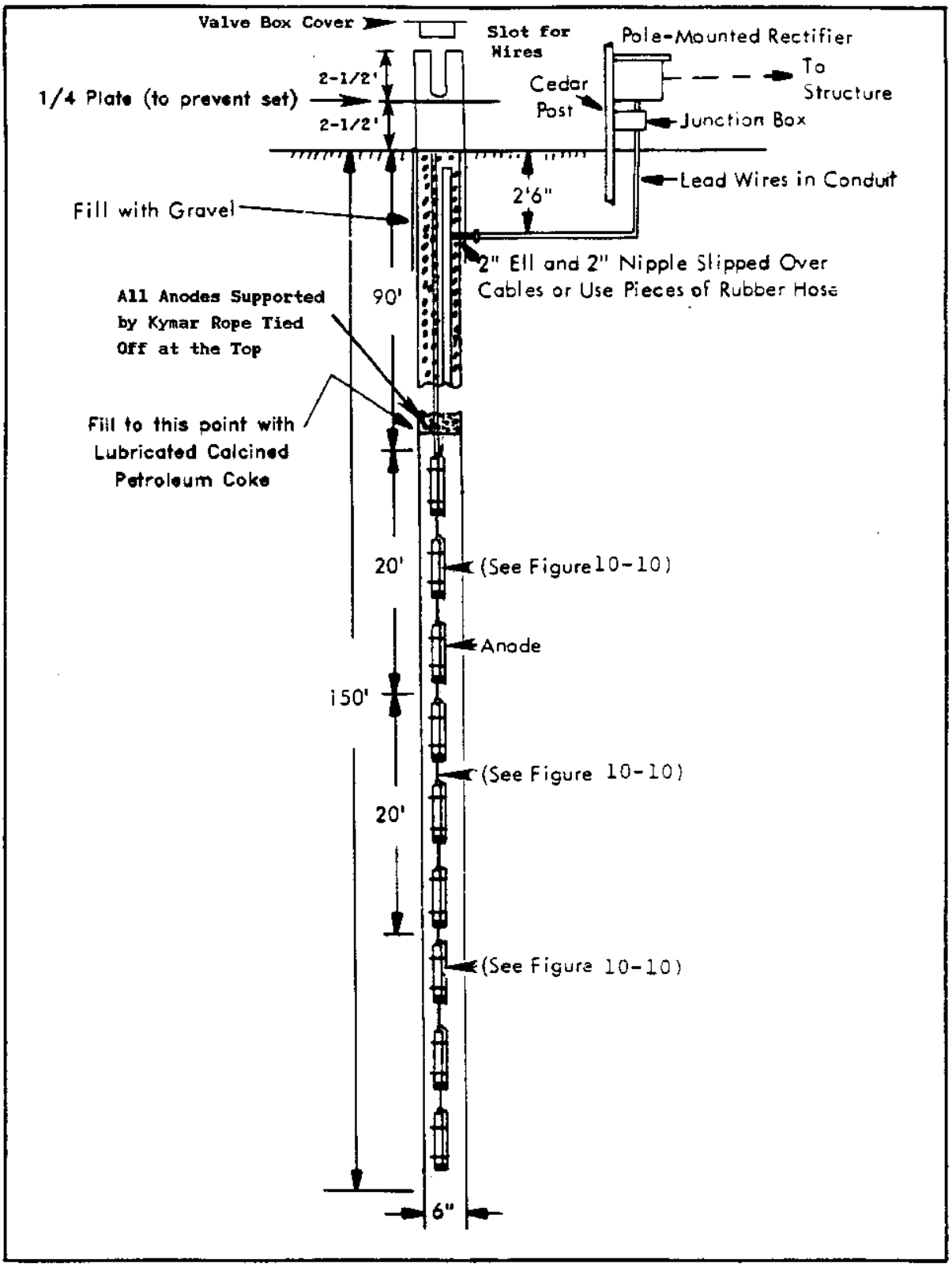

Figure 123
Typical Deep Well Anode Cathodic Protection Installation

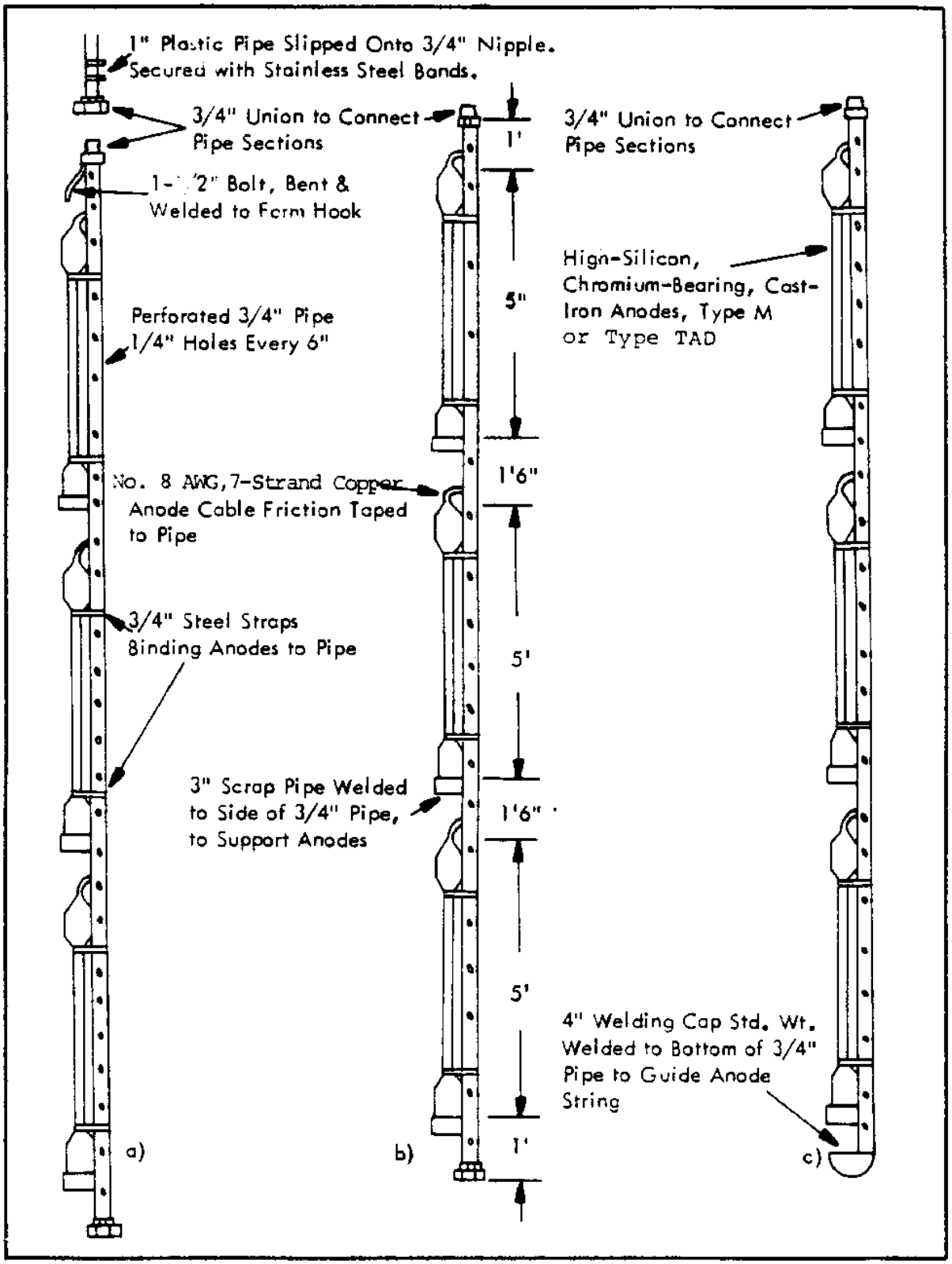

Figure 124
Deep Anode Installation Details

10.9.4 Other Anode Types. Button anodes and platinized anodes are commonly mounted directly on the structure. Their installation requires that the anode element be electrically isolated from the structure so that the protective current will flow through the electrolyte. Maintaining this isolation requires that the anodes be mounted in accordance with the manufacturer's instructions for the specific type and size of anode being used. In addition, a high quality protection coating or plastic shield is often required in the vicinity of a flush-mounted anode in order to insure proper current distribution. Anodes suspended in water should never be suspended using the cable leads but should be suspended using either chemical resistant lines or net bags. Nylon and polypropylene are commonly used for such applications.

10.9.5 Connections. All connections between the anodes and rectifier in impressed current cathodic protection systems are extremely critical. The number and location of all connections and splices should be kept to a minimum and should be installed according to the design and not left to the discretion of the installer. Thermo-weld connections are preferred, although mechanical connections may be used. All of the connections in contact with the electrolyte should be encapsulated using epoxy material.

10.10 Impressed Current Rectifier Installation. Rectifiers are usually either pole-mounted or pad-mounted units. They should be installed according to applicable codes and guidance applicable to all electrical. Even though exposed wiring may be permissible, wiring in conduit is preferred to reduce vandalism and deterioration. All rectifier installations should be equipped with a fused switch to allow disconnection of power to the rectifier. Typical pole mounted and pad mounted rectifier installations are shown in Figures 125 and 126.

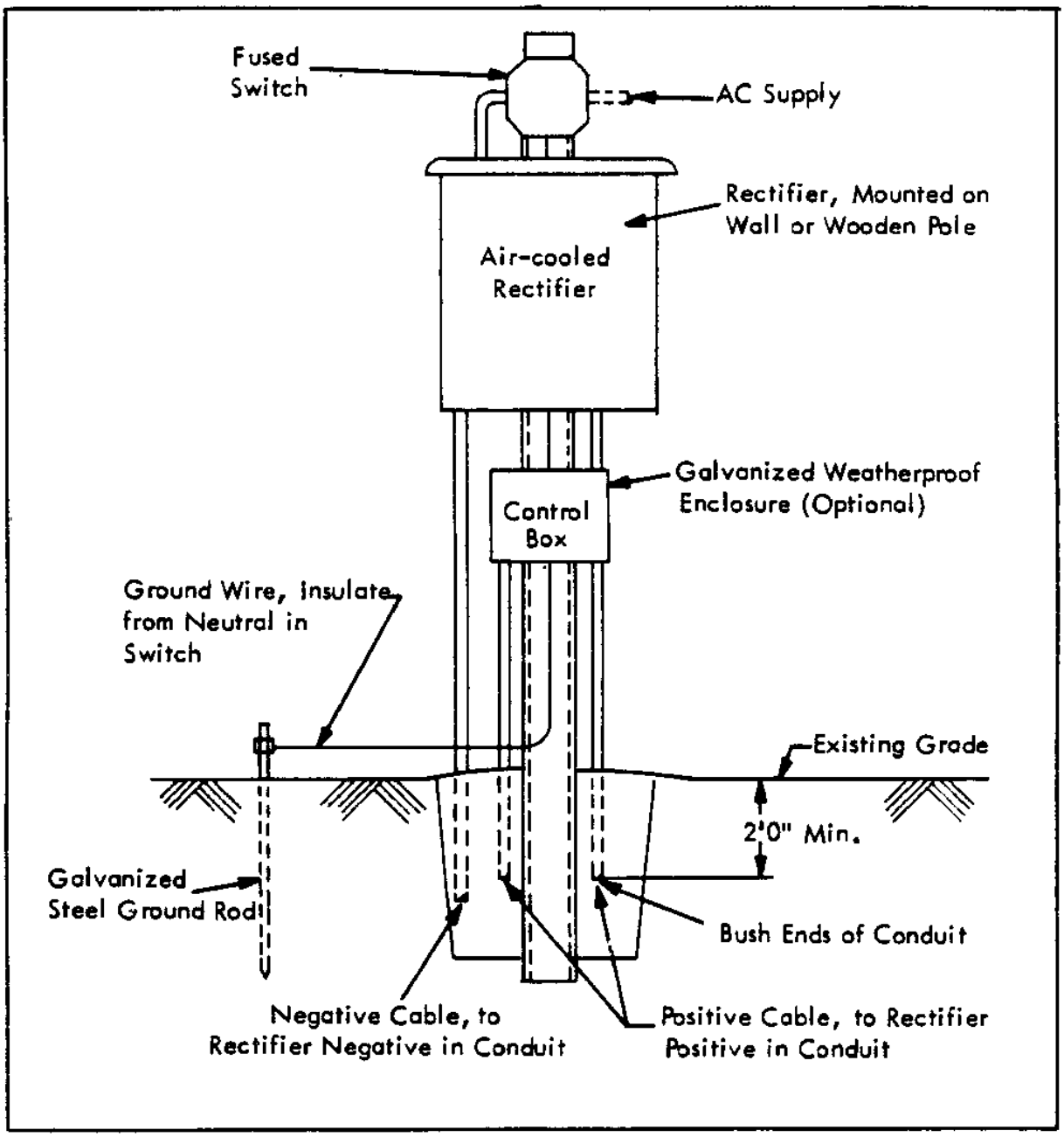

Figure 125
Typical Pole-Mounted Cathodic Protection
Rectifier Installation

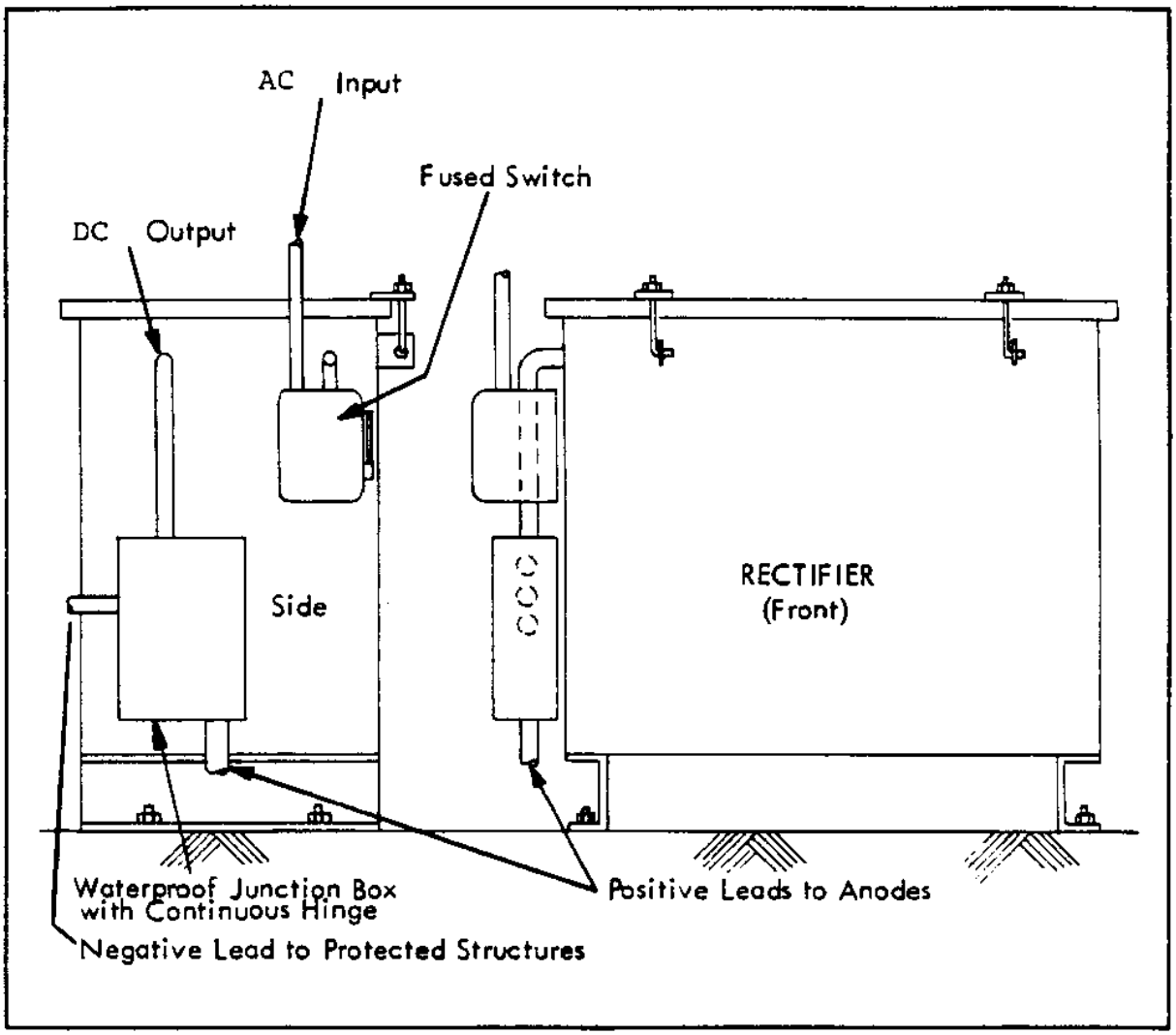

Figure 126
Typical Pad-Mounted Cathodic Protection
Rectifier Installation

Section 11: SYSTEM CHECKOUT AND INITIAL ADJUSTMENTS

11.1 Introduction. After a cathodic protection system is installed, it must be checked out to determine if protective potentials have been achieved without interference to other structures in the vicinity. Initial testing should be considered to be part of the system design and installation and should be the responsibility of the designer of the system. The structure-to-electrolyte potential measurement is the basic measurement that is used to determine if proper levels of protection have been achieved. The -850 mV or 100 mV negative polarization shift criteria (refer to para. 3.3.1) are recommended for evaluation of the effectiveness of cathodic protection systems on steel structures. Problems with interference can be identified during the initial system checkout and should be corrected as soon as possible to prevent premature failure.

11.2 Initial Potential Survey. Structure-to-electrolyte potentials should be measured at each test station or test point. Due to polarization effects, these potentials may change substantially within the first year of installation, and should be checked monthly for the first 3 months, then quarterly for the remainder of the first year. Low potential readings may be due to inadequate protective current flow, coating damage, or interference. Sacrificial anode output currents should be measured at each potential current test station since anode current measurements can be used to determine the cause of low potential readings and to better estimate sacrificial anode consumption rates. Anode currents should also be read monthly for the first 3 months and then quarterly for the duration of the first year.

11.3 Detection and Correction of Interference. Interference is normally detected by analysis of structure-to-electrolyte potentials made during initial system checkout. Unusually high or low potential readings are found over points where current is either entering or leaving the structure. Methods of detecting and correcting interference problems in cathodic protection systems are described in para. 5.2.1.

11.4 Adjustment of Impressed Current Systems. Adjustment of rectifier output is the most common adjustment made in impressed current cathodic protection systems. Underprotection or overprotection can be corrected by adjusting rectifier output if the structure-to-electrolyte potentials are fairly uniform over the structure and the required output is within the capacity of the rectifier. Rectifier output should not require frequent adjustment as system changes that can be corrected by rectifier adjustment occur slowly. Improper system potentials may also be the result of unusual seasonal conditions and may be self correcting.

11.4.1 Uneven Structure-To-Electrolyte Potentials. If the structure-to-electrolyte potentials are vastly uneven, overprotection or underprotection in some areas in order to achieve proper potentials in other areas may result. In this case, if interference is not present, output of anodes at the areas of underprotection will have to be increased or anodes added. The output of anodes in the areas of over protection will have to be reduced. If the anodes are connected through resistors, resistor adjustment may be adequate. If the structure is protected by impressed systems with point ground beds, underprotected areas may have to be improved by the addition of impressed

current anode beds in appropriate locations. If the anodes are not connected through resistors, resistors may be added. Protective output can be increased or decreased locally by installing additional anodes or disconnecting anodes as necessary.

11.4.2 Rectifier Voltage and Current Capacity. If the voltage capacity of the rectifier is inadequate to provide sufficient current to achieve protection, reduction of system resistance by the installation of additional anodes may be appropriate. If the current capacity of the rectifier proves inadequate, and correction of any interference or shorts does not result in adequate protection over a period of 1 year, then additional current must be supplied either by installing an additional rectifier in parallel with the existing rectifier, or installing a larger capacity rectifier in place of the existing rectifier.

11.5 Adjustment of Sacrificial Anode Systems. Overprotection in sacrificial anode cathodic protection systems is rare as the open circuit (maximum) potential of most anode materials is normally less than that potential considered to be excessive. Potentials more negative than those required for protection are, however, wasteful and will result in premature anode consumption. Potentials in sacrificial anode cathodic protection systems can be easily adjusted by inserting an adjustable resistor in the anode lead and adjusting it to give the current required for adequate protection.

11.5.1 Low Anode Current Levels. Low anode current output resulting in inadequate protection is common in sacrificial anode cathodic protection systems. Low anode current output can be the result of high soil resistivity or high circuit resistance. If high soil resistivity is suspected, wet down the soil over the anodes and remeasure the current output after a few days. If the current increases to give adequate protection, then high soil resistivity problems have been confirmed. If lowering the soil resistivity in the vicinity of the anodes does not result in increased anode output, then high circuit resistance may be the problem and all leads and connections should be checked. If all leads and connections are all right and the output is still too low, then more anodes are required to provide additional current. In the case of an impressed system, the rectifier voltage may be increased.

11.5.2 Inadequate Protection at Designed Current Levels. If a situation is encountered where anode current output is within design limits and adequate protection is not obtained, the current required for protection may be more than originally anticipated. This may be due to interference, unusually corrosive soil conditions, a poorly performing coating on the structure, or a shorted dielectric fitting. If any interference has been corrected and inadequate protection is still encountered, either more anodes will have to be installed, or the rectifier current output will have to be increased, or both.

Section 12: MAINTAINING CATHODIC PROTECTION SYSTEMS

12.1 Introduction. In order to provide the increased structural lifetime and reliability intended, cathodic protection systems must be monitored and maintained. Economic analysis, made at the time when cathodic protection was selected as a means of corrosion control, should have included the cost of periodic monitoring and maintenance.

12.2 Required Periodic Monitoring and Maintenance. The effectiveness of cathodic protection systems usually changes with time. The consumption of both sacrificial and impressed current anodes can result in decreased anode output which results in inadequate protection. Deterioration of cable insulation or connections can result in increased circuit resistance with similar effects. Rectifier output may be reduced by aging of the stacks, or may be completely interrupted by electrical failure. The corrosion environment may change if there is a change in drainage patterns or the area around an anode is paved reducing local soil moisture content. Construction of additional structures or modification to existing structures in the area may result in interference.

12.3 Design Data Required for System Maintenance. In order for a cathodic protection system to be effectively monitored and maintained, the parameters used in the design of the system and the "as built" configuration of the system must be known.

12.3.1 Drawings. "As built" drawings of the cathodic protection system and the structure being protected should be available as well as drawings of other structures in the area which might cause interference problems. The cathodic protection system drawings should include, as a minimum, the location and configuration of all test stations, the location and type of all anodes and rectifiers, and the location of all connections and insulating joints. These drawings should be periodically updated to show any changes made to the cathodic protection system, the structure being protected, or nearby structures.

12.3.2 System Data. The following system design parameters should be recorded and kept with the system drawings in order to properly monitor and maintain the cathodic protection system.

12.3.2.1 Design Potentials. The desired potentials used in the design of the cathodic protection system should be indicated. In some cases, different criteria may be used to establish minimum protective potentials at different locations of the same structure.

12.3.2.2 Current Output. The design current outputs of the rectifiers or sacrificial anodes in the system should be recorded. This data is most important in the initial system checkout but may also be used to evaluate discrepancies in structure-to-electrolyte potential readings.

12.3.2.3 System Settings and Potential Readings. The initial system settings and potential readings should be recorded. Changes to the system, such as rectifier adjustment, should be periodically recorded as described in paras. 12.4 and 12.5. Potential readings taken both at the time of initial

system adjustment and during periodic monitoring should be recorded as described in paras. 12.4 and 12.5 in order to detect trends in the readings. Changes in potential readings are often more important than the actual values themselves in determining the cause of improper system operation.

12.3.2.4 Rectifier Instructions. In order that all rectifiers in the system can be properly maintained, adjusted, and repaired, instructions for the rectifiers must be retained. An original copy should be retained in the maintenance files and a copy should be kept within the rectifier enclosure for field reference.

12.4 Basic Maintenance Requirements. Basic maintenance requirements are as follows:

a) Monthly. Take rectifier panel meter and tap setting readings. Record readings (see sample form - Figure 127). Check rectifier connections.

b) Quarterly. Take structure-to-electrolyte potential readings at selected locations (not less than four points per system). The test points should include:

(1) the point of least negative potential,

(2) the point of highest negative potential, and

(3) two points of least negative potential not the same as (1). Record readings (see sample form - Figure 128). Inspect anode-to-structure connections in galvanic anode systems quarterly.

c) Annually. Inspect submerged sacrificial and impressed current anodes for consumption. Inspect test stations for broken wires, loose connections or other damage. Make structure-to-electrolyte potential readings at all test points and submit data in accordance with Agency instructions.

In addition to the basic requirements listed above, opportunities to inspect buried or otherwise inaccessible structure surfaces should be used to inspect the surfaces for evidences of corrosion or coating deterioration. Such opportunities may be presented by construction or maintenance in the vicinity of the protected structure.

12.5 Guidance for Maintenance

12.5.1 Agency Maintenance and Operations Manuals. Agency Maintenance and Operation Manuals, (MO-306, Corrosion Prevention and Control, and MO-307, Cathodic Protection Systems Maintenance) give current guidance for the maintenance and operation of cathodic protection systems and provide information on other methods of corrosion control.

CATHODIC PROTECTION RECTIFIER REPORT

ACTIVITY: NAVAL BASE SEAPORT, USA PIER 22

PERIOD ENDING: 6-30-83

RECT. IDENT.	DATE 1983	INSPECTOR INITIALS	TAP SETTING COARSE	TAP SETTING FINE	A.C. VOLT	A.C. AMP	1ST D.C. OUTPUT VOLT	1ST D.C. OUTPUT AMP	2ND D.C. OUTPUT VOLT	2ND D.C. OUTPUT AMP	3RD D.C. OUTPUT VOLT	3RD D.C. OUTPUT AMP	REMARKS
1	4-22	FN	A	4	–	–	4.0	130					①
2		FN	A	4	–	–	4.2	130					①
3		FN	A	5	–	–	5.5	235					①
4		FN	A	4	–	–	4.3	155					①
5		FN	B	1	–	–	7	340					①
1	5-26	FN					4.0	130					
2		FN					4.1	130					
3		FN					5.6	240					
4		FN					4.1	140					
5		FN					7	340					
1	6-15	FN					4.1	130					
2		FN					4.1	130					
3		FN					5.6	240					
4		FN					4.2	150					
5		FN					7	340					

SAMPLE

GENERAL REMARKS

① INITIAL SETTINGS: GOODALL RECTIFIER
MODEL: CSCYTD 24-500E2
SERIAL: #80C1717
PRIMARY: 460 VAC, 22.1A, 3 ϕ, 60 HZ
DC 24 V, 500 A

NAVFAC 9-11014/75 (5/83)

Figure 127
Form for Recording and Reporting Monthly Rectifier Readings

CATHODIC PROTECTION
STRUCTURE-TO-ELECTRODE POTENTIAL

ACTIVITY: NAVAL SUPPLY DEPOT SEAPORT, USA

PERIOD ENDING: 6-30-83

TEST POINT	LOCATION OR IDENTIFICATION	P/S VOLT	SHUNT MV	SHUNT RES	SHUNT MA	INSPECTOR INITIALS	DATE	REMARKS*
32-1	TANK 32	-.495				FN	4-8	TANK #32 NOT PROTECTED
32-2	" "	-.415				FN	4-8	
31-1	TANK 31	-.773				DKJ	5-2	TANK #31 CP SYSTEM INADEQUATE
31-2	" "	-.803				DKJ	5-2	
31-3	" "	-.790				DKJ	5-2	
31-4	" "	-.781				DKJ	5-2	
A	OLD 12" FUEL LINE	-.861				FN	5-22	SATISFACTORY
B	" " " "	-1.025				FN	5-22	"
1	6" FUEL LINE	-.750				JFJ	6-15	① INADEQUATE
2	" " "	-.755				JFJ	6-15	① INADEQUATE
3	" " "	-.885				JFJ	6-15	OK
4	" " "	-.888				JFJ	6-15	OK

SAMPLE

NOTES: 1. Identify test electrode if other than copper sulfate.
① FOLLOWING HEAVY RAINS, SOIL MOISTURE MAY HAVE AFFECTED READING. WILL CHECK IN JULY

NAVFAC 9-11014/74 (5-83)

Figure 128
Form for Recording and Reporting Quarterly
Structure-to-Electrode Potentials

12.5.2 DOT Regulations. Department of Transportation Regulations (Appendix E) also give guidelines for the establishment of an effective inspection and maintenance program for cathodic protection systems.

12.5.3 NACE Standards. NACE Standards RP-02-85, RP-01-69, and RP-50-72, also include guidelines for the monitoring and maintenance of cathodic protection systems or components.

THIS PAGE INTENTIONALLY LEFT BLANK

Section 13: ECONOMIC ANALYSIS

13.1 Importance of Economic Analysis. Economic analysis is a methodology utilized by decision-makers to compare quantitative informati and select alternatives based on economic desirability. Beyond this, suc issues as resource availability, fluctuating operation costs, and uncertainty have significant impacts on the decision-making process.

Cathodic protection is a form of corrosion control. Economic analysis is a tool that allows an evaluation of system performance (with without cathodic protection), so that an assessment may be made in the context of such factors as safety, health, and operational necessity.

13.2 Economic Analysis Process. The economic analysis process consi of six steps (refer to NAVFAC P-442):

a) Define the objective

b) Generate alternatives

c) Formulate assumptions

d) Determine costs and benefits

e) Compare costs and benefits and rank alternatives

f) Perform sensitivity analysis

SIX STEPS OF ECONOMIC ANALYSIS

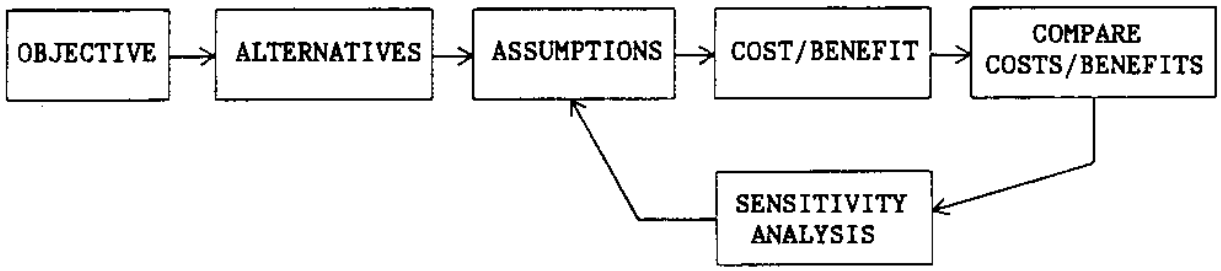

The drawing above summarizes the process. All six steps must be performe to prepare a thorough and objective analysis.

13.2.1 Define the Objective. The objective statement should state the purpose of the analysis. For example: provide a water pipeline, 4 inche in diameter and 10,000 feet long. It should be unbiased, well-defined an incorporate a measurable standard of performance.

13.2.2 Generate Alternatives. After the objective statement is defined, all feasible alternatives should be generated that will meet that objective. "Undesirable" alternatives should also be considered. They may provide additional information that can be utilized by the decision-maker.

13.2.3 Formulate Assumptions. The economic process involves estimates of future expenditures and uncertainty. Thus, assumptions often must be made in order to analyze various alternatives. Assumptions should be clearly defined and documented. Thorough documentation requires that all sources be cited.

13.2.4 Determine Costs and Benefits. The determination of costs and benefits requires collection and analysis of data. Data must be analyzed for the entire economic life of the proposal. This requires discounting of the estimated future costs and benefits and a determination of the period of time to be analyzed. The specific factors limiting the duration of economic life are as follows (refer to NAVFAC P-442):

a) The mission life, or period over which a need for the asset(s) is anticipated;

b) The physical life, or period over which the asset(s) may be expected to last physically;

c) The technological life, or period before obsolescence would dictate replacement of the existing (or prospective) asset(s).

The economic life is defined as the period of time during which a proposal provides a positive benefit to the Navy (refer to NAVFAC P-442). Although the physical life of an asset may be quite long, the mission or technological life is constrained to a shorter period of time (25 years maximum). Anticipated need of an asset and possible obsolescence are difficult to predict. The economic life is determined to be the least of the mission life, physical life, and technological life. The method of discounting, used to determine the present value of costs and benefits, also suggests that 25 years be the maximum economic life. Refer to Appendix B for economic life guidelines.

13.2.4.1 Costs. Cost estimates place a dollar value on materials, labor, maintenance, and acquisition of a proposed alternative. Discounting of these values allows life cycle costing of that alternative. To compute present values, a 10 percent discount rate is assumed and is used for most Government investments. This discount rate accounts for the general inflation rate (refer to NAVFAC P-442). See Appendixes C and D for project year discount factors and present value formulae. Life cycle cost in an economic analysis is the total cost to the Government of acquisition of ownership of an alternative over its full life (refer to NAVFAC P-442). One caveat, sunk costs that have occurred before the decision point (time of analysis), are not to be considered. These include costs that have already been spent, such as research and development and previous acquisition of an asset.

a) One-time costs are costs that occur at one point in time or at different values over an extended period of time (economic life). Examples are acquisition costs, research and development (after the decision point), and terminal or salvage value of asset at the end of its economic life. Recurring annual costs are costs that occur annually over an extended period of time (economic life). Examples are personnel costs, operating costs, and maintenance.

b) Depreciation has no effect on cash flow for Government investments (refer to NAVFAC P-442).

c) Inflation costs are measured in constant dollars, or in terms of a base year (year 0 of the analysis). When costs of labor and materials are expected to rise (or lower) with the general inflation rate, no special treatment of inflation is needed. As stated in para. 13.2.4.1, the use of a discount factor of 10 percent adjusts for the general inflation rate. Occasionally, cost estimates need special treatment. For example, oil prices escalated faster than the general inflation rate in the 1970s. A thorough treatment of inflation can be found in Chapter VII of NAVFAC P-442.

d) Cost source data should always be documented for each cost element of the economic analysis. The specific data source, method of data derivation (if applicable), and an assessment of the accuracy of the cost element are required (refer to NAVFAC P-442).

13.2.4.2 Benefits. Benefits are an important consideration in the economic process. NAVFAC P-442 specifies four types of benefits:

a) Direct cost savings

b) Efficiency/productivity increases

c) Other quantifiable output measures

d) Nonquantifiable output measures

Special caution must be taken when evaluating benefits. All potential benefits must be identified for each alternative and quantified whenever possible. Unquantifiable benefits must also be identified. A qualitative statement will provide the decision-maker with additional information. Document negative aspects as well. Most important, source data should always be documented. A thorough treatment of benefit documentation can be found in Chapter V of NAVFAC P-442.

13.2.5 Compare Costs and Benefits and Rank Alternatives. After the costs and benefits are determined, a comparison of the alternatives should be produced. Alternatives are to be ranked based on economic desirability.

13.2.6 Perform Sensitivity Analysis. Sensitivity analysis provides feedback within the economic process (see drawing in para. 13.2). A double check on the assumptions gives credibility to the final results. It further refines the assumptions and indicates which values are sensitive to change. In this way, the decision-maker can be certain that all relevant information has been considered. A thorough treatment of sensitivity analysis can be found in Chapter VI of NAVFAC P-442.

13.3 Design of Cathodic Protection Systems. Once a facility has been funded, design alternatives must be examined. Design analysis follows the economic methodology of Section 13. It is the responsibility of the Navy to

have a thorough knowledge of corrosion control and to implement the best strategy. The six-step economic process facilitates this goal. The following examples illustrate this process.

13.4 Economic Analysis - Example 1

13.4.1 Objective. Install a water pipeline, 4 inches in diameter and 10,000 feet long.

13.4.2 Alternatives

a) Steel line without cathodic protection

b) Steel line with cathodic protection

c) Plastic line

This list is not exhaustive. All feasible alternatives should be examined that will meet the objective. For clarity of demonstration, only three alternatives will be considered in this example.

13.4.3 Assumptions

a) The soil resistivity is equal to 5,000 ohm-cm, pH 6, which is a moderately aggressive corrosion environment.

b) The economic life of a water pipeline is 25 years. It is assumed that no salvage value will be remitted in year 25 unless total replacement is cost justified at that point in time.

c) The predicted number of leaks due to corrosion failures on the steel line without cathodic protection increases exponentially after the first leak in year 15. This prediction is based on historical data and technical expertise.

d) The predicted number of leaks on the steel line with cathodic protection is zero. Continued maintenance and protection is assumed. A major rehabilitation of the system is required every 15 years. This prediction is based on historical data and technical expertise.

e) The predicted number of repairs due to mechanical damage on the plastic line is two per year. This prediction is based on historical data and technical expertise.

f) To compute present values, a 10 percent rate is assumed.

g) This analysis requires no special treatment of inflation.

13.4.4 Cost/Benefit Analysis

13.4.4.1 Cost - Alternative 1--Steel Line Without Cathodic Protection. Cost of steel line without cathodic protection - $320,000. Cost to repair leaks - @ $6,000 each.

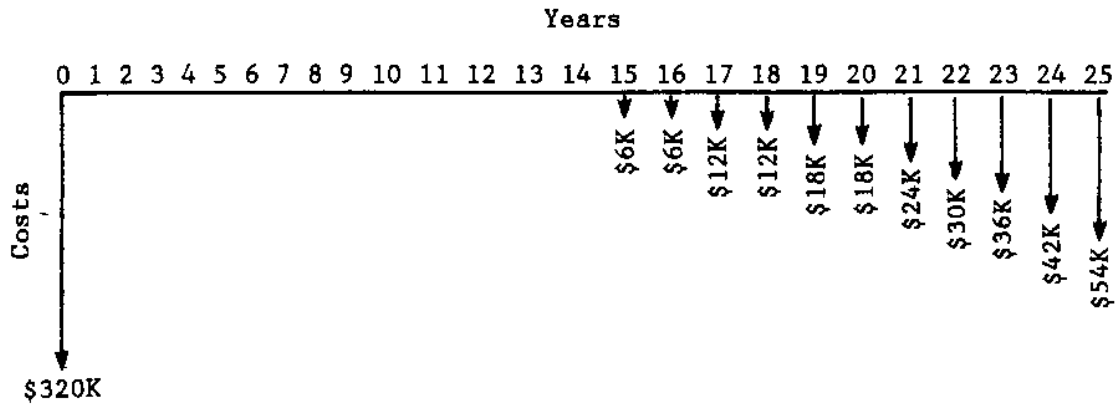

Alternative 1

Project Year(s)	Cost Element	Amount One-Time	Amount Recurring	Discount Factor	Discounted Cost
0	Installation	$320,000		1.000	$320,000
1-14	none				
15	Repair leaks	6,000		0.251	1,506
16	Repair leaks	6,000		0.228	1,368
17	Repair leaks	12,000		0.208	2,496
18	Repair leaks	12,000		0.189	2,268
19	Repair leaks	18,000		0.172	3,096
20	Repair leaks	18,000		0.156	2,808
21	Repair leaks	24,000		0.142	3,408
22	Repair leaks	30,000		0.129	3,870
23	Repair leaks	36,000		0.117	4,212
24	Repair leaks	42,000		0.107	4,494
25	Repair leaks	54,000		0.097	5,238
		Total Net Present Value Cost:			$354,764

13.4.4.2 Cost - Alternative 2 --Steel with Cathodic Protection. Cost of steel line with cathodic protection - $332,800. Annual cost of cathodic system maintenance - $1,800. Major rehabilitation of cathodic protection system every 15 years - $4,300.

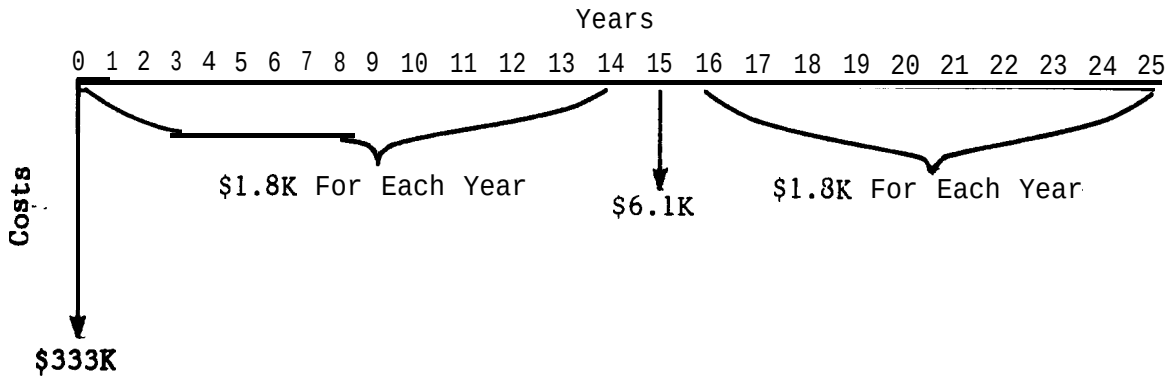

Alternative 2

Project Year(s)	Cost Element	Amount One-Time	Amount Recurring	Discount Factor	Discounted cost
0	Installation	$332,800		1.000	$332,800
l-25	Maintenance		$1,800	9.524	17,143
15	Rehabilitation	$4,300		0.251	1,079
		Total Net Present Value Cost:			$351,022

13.4.4.3 Cost - Alternative 3--Plastic Line. Cost of plastic line - $256,000. Cost to repair leaks - @ $6,000 each.

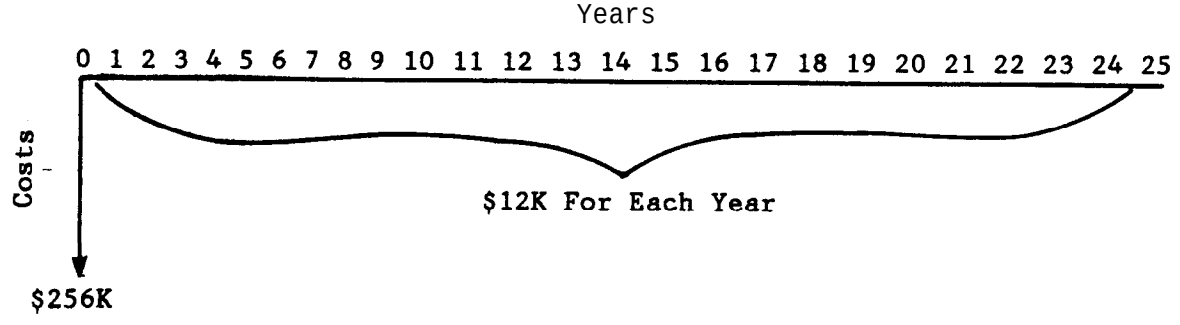

Alternative 3

Project Year(s)	Cost Element	Amount One-Time	Amount Recurring	Discount Factor	Discounted Cost
0	Installation	$256,000		1.000	$256,000
1-25	Repair leaks		$12,000	9.524	114,288
		Total Net Present Value Costs:			$370,288

13.4.4.4 Benefits. A significant benefit of utilizing cathodic protection is that, at the end of the economic life of the structure, the structure remains in functional condition and can be maintained in that condition essentially indefinitely at low cost.

13.4.5 Compare Costs/Benefits

a) Alternative 1 - Net present value = $354,764

b) Alternative 2 - Net present value = $351,022

c) Alternative 3 - Net present value = $370,288

Alternative 2, steel line with cathodic protection, suggests the least life-cycle cost proposal.

13.5 Economic Analysis - Example 2

13.5.1 Objective. Install a fuel pipeline, 8 inches in diameter and 15,000 feet long.

13.5.2 Alternative

a) Steel line without cathodic protection.

b) Steel line with cathodic protection.

13.5.3 Assumptions

a) The soil resistivity is equal to 5,000 ohm-cm, pH 6, which is a moderately aggressive corrosion environment.

b) The economic life of a fuel pipeline is 25 years. It is assumed that no salvage value will be remitted in year 25 unless total replacement is cost justified at that point in time.

c) The predicted number of leaks on the steel line without cathodic protection increases exponentially after the first leak in year 10. This prediction is based on historical data and technical expertise.

d) The predicted number of leaks on the steel line with cathod protection is zero. Continued maintenance and protection is assumed. A major rehabilitation of the system is required every 15 years. This prediction is based on historical data and technical expertise.

e) To compute present values, a 10 percent discount rate is assumed.

f) Costs of labor and materials rise (or lower) with the gener inflation rate. Cost of fuel, however, requires special treatment when determining the value lost (disbenefit) from a pipeline leak. Otherwise, this analysis requires no special treatment of inflation.

13.5.4 Cost/Benefit Analysis

13.5.4.1 Cost - Alternative 1--Steel Line Without Cathodic Protection. Cost of steel line without cathodic protection - $960,000. Cost to repai leaks - @ $10,000 each.

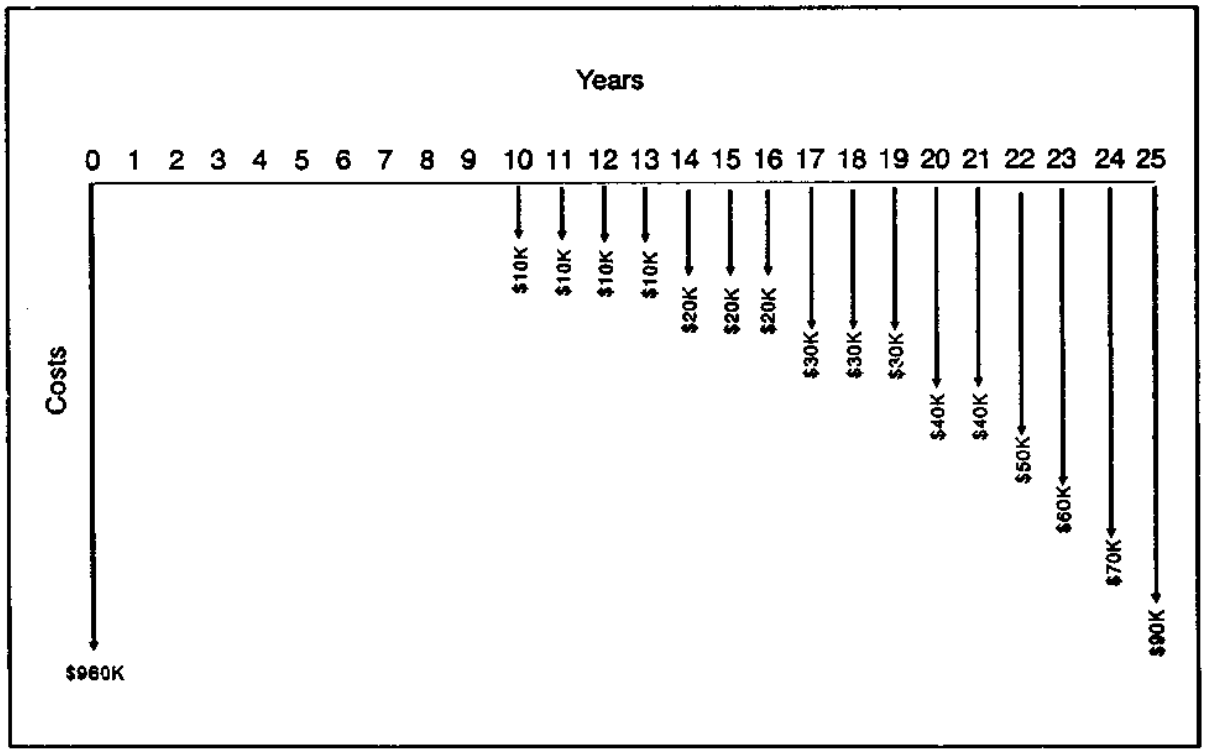

Alternative 1

Project Year(s)	Cost Element	Amount One-Time	Amount Recurring	Discount Factor	Discounted Cost
0	Installation	$960,000		1.000	$ 960,000
1-9	none				
10	Repair leaks	10,000		0.405	4,050
11	Repair leaks	10,000		0.368	3,680
12	Repair leaks	10,000		0.334	3,340
13	Repair leaks	10,000		0.304	3,040
14	Repair leaks	20,000		0.276	5,520
15	Repair leaks	20,000		0.251	5,020
16	Repair leaks	20,000		0.228	4,560
17	Repair leaks	30,000		0.208	6,240
18	Repair leaks	30,000		0.189	5,670
19	Repair leaks	30,000		0.172	5,160
20	Repair leaks	40,000		0.156	6,240
21	Repair leaks	40,000		0.142	5,680
22	Repair leaks	50,000		0.129	6,450
23	Repair leaks	60,000		0.117	7,020
24	Repair leaks	70,000		0.107	7,490
25	Repair leaks	90,000		0.097	8,730
		Total Net Present Value Cost:			$1,047,890

13.5.4.2 Cost - Alternative 2--Steel Line With Cathodic Protection. Cost of steel line with cathodic protection - $998,000. Annual cost of cathodic system maintenance - $3,500. Major rehabilitation of cathodic protection system every 15 years - $12,000.

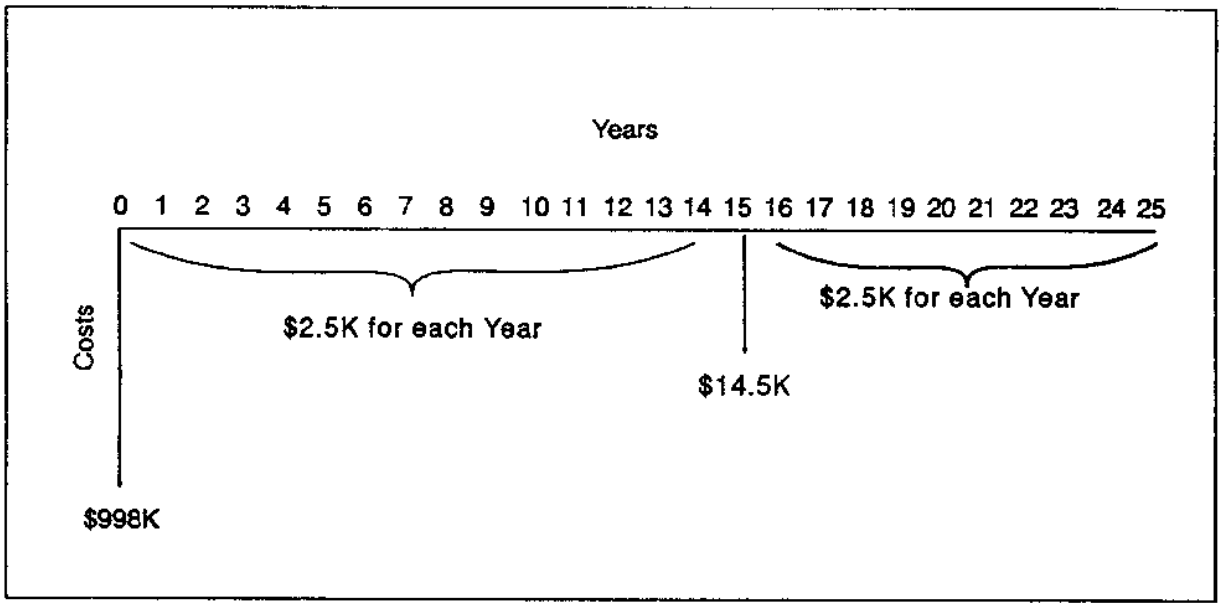

Alternative 2

Project Year(s)	Cost Element	Amount One-Time	Amount Recurring	Discount Factor	Discounted Cost
0	Installation	$998,000		1.000	$998,000
1-25	Maintenance		$2,500	9.524	23,810
15	Rehabilitation	12,000		0.251	3,012
				Total Net Present Value Cost:	$1,024,822

13.5.4.3 Benefits. As in the case of the waterline in the previous example, a significant benefit of cathodic protection is that the functio of the line is maintained.

13.5.5 Compare Costs/Benefits

a) Alternative 1 - Net present value = $1,047,890

b) Alternative 2 - Net present value = $1,024,822

Alternative 2, installation of a steel line with cathodic protection, suggests the least life-cycle cost proposal.

13.5.6 Conclusions and Recommendations. In addition to the economic benefits of protection, addition factors such as safety, reliable operation, loss of product, environmental pollution and regulation indicate that cathodic protection should be installed.

13.6 Economic Analysis - Example 3

13.6.1 Objective. Install a steel (fuel) pipeline, using cathodic protection, 8 inches in diameter and 15,000 feet long.

13.6.2 Alternatives

a) Impressed current cathodic protection system

b) Galvanic anode cathodic protection system

13.6.3 Assumptions

a) The soil resistivity is equal to 5,000 ohm-cm, pH 6, which is a moderately aggressive corrosion environment.

b) The economic life of a fuel pipeline is 25 years. It is assumed that no salvage value will be remitted in year 25 unless total replacement is cost justified at that point in time.

c) The predicted number of leaks on a steel fuel line with impressed current cathodic protection is zero. Continued protection and maintenance is assumed. Repair of the rectifier is required every 10 years. Replacement of the anodes is required every 20 years. This prediction is based on historical data and technical expertise.

d) The predicted number of leaks on a steel fuel line with galvanic anode cathodic protection is zero. Continued protection and maintenance is assumed. A major rehabilitation of the system is required every 15 years. This prediction is based on historical data and technical expertise.

e) To compute present values, a 10 percent discount rate is assumed.

f) Costs of labor and materials rise (or lower) with the general inflation rate. Cost of fuel, however, requires special treatment when determining the value lost (disbenefit) from a pipeline leak. Otherwise, this analysis requires no special treatment of inflation.

13.6.4 Cost/Benefit Analysis

13.6.4.1 Cost - Alternative 1--Impressed Current Cathodic Protection. Cost of steel line with impressed current system - $998,000. Annual cost of maintenance with impressed cathodic protection system - $4,200. Cost to repair rectifier every 10 years - $1,500. Cost to replace anodes every 20 years - $8,000.

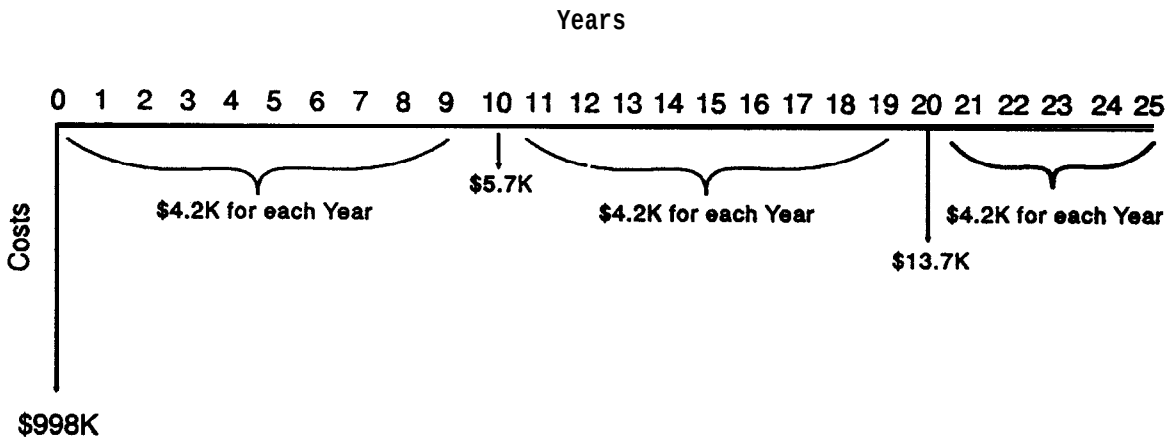

Alternative 1

Project Year(s)	cost Element	Amount One-Time	Amount Recurring	Discount Factor	Discounted cost
0	Installation	$998,000		1.000	$ 998,000
1-25	Maintenance		$4,200	9.524	40,001
10	Repair/rectifier	1,500		0.405	607
20	Repair/rectifier	1,500		0.156	234
20	Replace/anodes	8,000		0.156	1,248
		Total Net Present Value Cost:			$1,040,090

13.6.4.2 Cost - Alternative 2--Galvanic Anode System. Cost of steel line with galvanic anode system - $986,000. Annual cost of galvanic anode system maintenance - $3,800. Major rehabilitation of cathodic protection system every 15 years - $12,000.

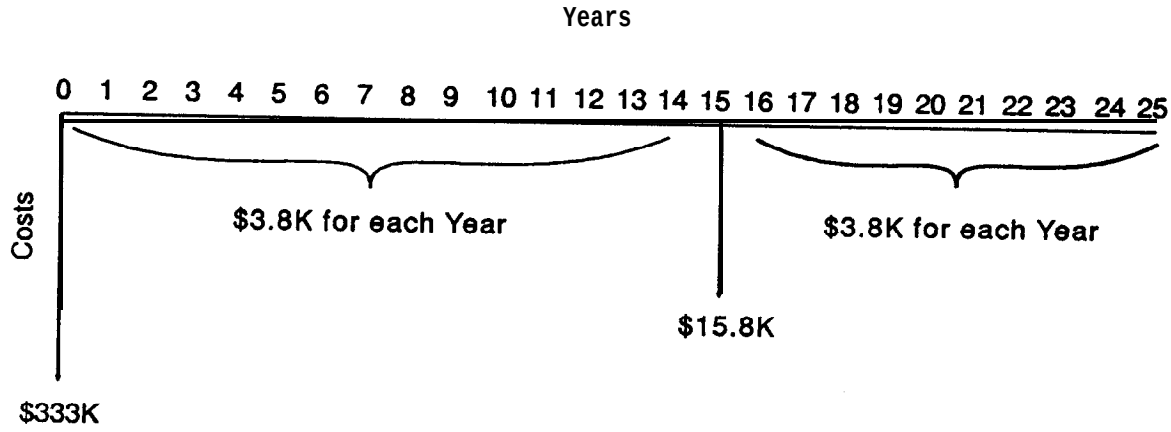

Alternative 2

Project Year(s)	Cost Element	Amount One-Time	Amount Recurring	Discount Factor	Discounted Cost
0	Installation	$986,000		1.000	$ 986,000
1-25	Maintenance		$3,800	9.524	36,191
15	Rehabilitation	12,000		0.251	3,012
				Total Net Present Value:	$1,025,203

13.6.5 Compare Costs/Benefits

a) Alternative 1 - Net present value = $1,040,090

b) Alternative 2 - Net present value = $1,025,203

Alternative 2, installation of a steel line, with a galvanic anode cathodic protection system, suggests the least life-cycle cost proposal.

13.7 Economic Analysis - Example 4

13.7.1 Objective. Determine whether cathodic protection should be continued on a steel fuel pipeline, 8 inches in diameter and 15,000 feet long.

13.7.2 Alternatives

a) Cathodic protection system maintenance continued.

b) Cathodic protection system maintenance discontinued.

13.7.3 Assumptions

a) Same assumptions as in para. 13.5.3.

b) Next major rehabilitation, on existing line, required in 7 years.

13.7.4 Cost/Benefit Analysis

13.7.4.1 Cost - Alternative 1--Cathodic Protection System Maintenance Continued. Annual cost of cathodic protection system maintenance - $3,500. Major rehabilitation of cathodic protection system every 15 years - $12,000. Salvage value of steel line - $24,000.

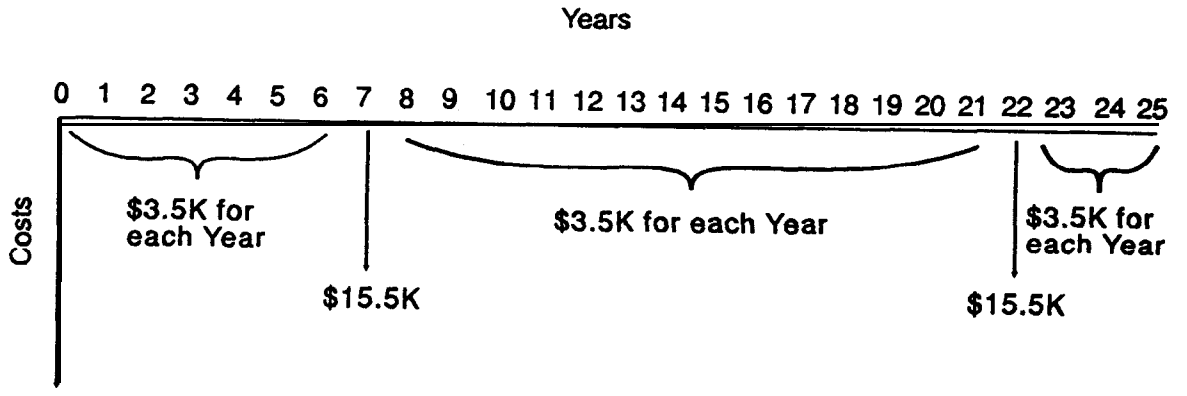

Alternative 1

Project Year(s)	cost Element	Amount One-Time	Amount Recurring	Discount Factor	Discounted cost
l-25	Maintenance		$3,500	9.524	$33,334
7	Rehabilitation	$12,000		0.538	6,456
22	Rehabilitation	12,000		0.129	1,548
		Total Net Present Value Cost:			$41,338

13.7.4.2 Cost - Alternative 2--Cathodic Protection System Maintenance Discontinued. Cost to repair leaks - @ $10,000 each. Salvage value of steel line - $24,000.

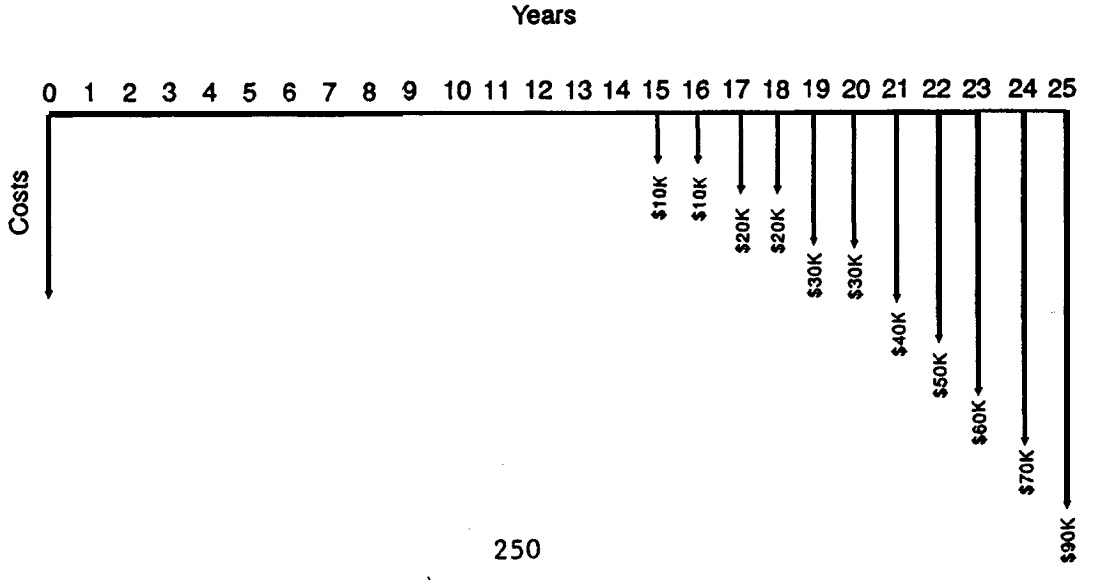

Alternative 2

Project Year(s)	Cost Element	Amount One-Time	Amount Recurring	Discount Factor	Discounted Cost
0-14	none				
15	Repair leaks	$10,000		0.251	$2,510
16	Repair leaks	10,000		0.228	2,280
17	Repair leaks	20,000		0.208	4,160
18	Repair leaks	20,000		0.189	3,780
19	Repair leaks	30,000		0.172	5,160
20	Repair leaks	$30,000		0.156	$4,680
21	Repair leaks	40,000		0.142	5,680
22	Repair leaks	50,000		0.129	6,450
23	Repair leaks	60,000		0.117	7,020
24	Repair leaks	70,000		0.107	7,490
25	Repair leaks	90,000		0.097	8,730
			Total Net Present Value:		$57,940

13.7.5 Compare Benefits and Costs

a) Alternative 1 - Net present value = $41,338

b) Alternative 2 - Net present value = $57,940

Alternative 1, continued cathodic protection, suggests the least life-cycle cost proposal.

13.8 Economic Analysis Goal. The goal of the economic process is to provide quantitative information in an unbiased manner and to provide the decision-maker with relevant information. Adhering to the six-step economic process will meet this goal.

THIS PAGE INTENTIONALLY LEFT BLANK

Section 14: CORROSION COORDINATING COMMITTEE PARTICIPATION

14.1 Introduction. In order to reduce the adverse effects of interference from cathodic protection systems in congested areas, corrosion coordinating committees have been established in almost every area of the United States and Canada as well as in major industrial or metropolitan areas in foreign countries.

14.2 Functions of Corrosion Coordinating Committees. The purpose of these committees is to serve as a "clearing house" for information regarding cathodic protection systems.

14.3 Operation of the Committees. Anyone planning, installing, or modifying cathodic protection systems, underground structures, or potential sources of stray currents in the area covered is expected to notify the appropriate corrosion coordinating committee(s). Members of the committees are representatives of all interested parties in the area. The committees have no power to enforce procedures or regulations but they are responsible for establishing notification procedures and they assist in establishing test programs and maintaining pertinent records in their areas.

14.4 Locations of Committees. Most corrosion coordinating committees, both in the United States and in foreign countries, are affiliated with the National Association of Corrosion Engineers. A list of the currently operating committees, including the names and addresses of current officers, can be obtained from the National Association of Corrosion Engineers, P.O. Box 218340, Houston, Texas, 77218.

THIS PAGE INTENTIONALLY LEFT BLANK

APPENDIX A

UNDERGROUND CORROSION SURVEY CHECKLIST

SECTION A - NEW CONSTRUCTION

1. Meeting With Architect/Engineer (A/E) or Owner:

   a. Description of facilities to be constructed:

      (1) What is included?

         a) Gas
         b) Water
         c) Buried electrical and grounding systems
         d) Buried communications or signal systems
         e) Tanks
         f) Pilings
         g) Bulkheads
         h) Building structural members
         i) Other

      (2) Materials to be used and where?

         a) Steel
         b) Cast iron
         c) Lead

         d) Concrete
         e) Copper
         f) Aluminum
         g) Other

      (3) Construction methods specified:

         a) Coatings - Types?
         b) Insulation between structures?
         c) Are special fills being used?
         d) Road and railroad casings? Are they insulated?
         e) Type pipe joints - weld, flange, dresser, other?
         f) Type grounding connecting cables?
         g) Layout of structures (distance between those of varying materials, etc.)?
         h) Roadways - Will deicing salts leach down into buried structures?
         i) Lawns - Their location. Is it objectionable to install abovegrade test stations, etc., in or near them?
         j) Pavement - Its location and type. What buried facilities will be placed under it?

APPENDIX A (continued)

b. Get complete drawings of all facilities:

(1) The following are usually included:

a) Electrical
b) Mechanical
c) Communications
d) Fire protection
e) Piling
f) Fuel systems
g) Storage tanks

(2) Be sure they are the latest.

(3) Ask to be kept advised of any changes.

c. Get the following information on ownership of facilities:

(1) Gas, water, power, telephone, etc. - Which are to be included in project? Which are "utility owned?"
(2) Where does utility's ownership and plant's jurisdiction begin?

(3) Will the utility install insulation?

d. What life does the owner expect from facilities? How many years?

e. What does a corrosion failure cost? (Each type facility.)

f. Are any facilities extremely critical? (No failures of any kind to be tolerated because of costs or hazard.)

g. Is direct current being used anywhere in this plant or nearby? Get:

(1) Complete information on where and why.

(2) Wiring diagrams and schematics.

(3) Method of grounding.

h. Are any abandoned facilities located in the vicinity? (Metal pipes, etc., may be used as ground beds.) Are they connected or to be connected to anything else?

2. Field Tests That Should Be Conducted:

a. Soil Resistivity. If site is uniform, take 5-foot and 10-foot (usual depth of buried structures) readings at suitably spaced grid (20-foot to 100-foot readings may be required). Do not exceed 100-foot spacing with vibroground instrument. If route of piping or structure is known, follow the route. Take readings of fill, if any.

b. Soil pH. Take pH at same places as resistivity, if soil is moist.

APPENDIX A (continued)

c. Soil Samples and Water Samples (Steam Riser, etc.). Take samples for sulfides and sulfate (and pH) at representative grid locations (minimum of six).

d. Stray Currents. Using two copper sulfate cells, take soil potential profile readings in a rosette pattern as necessary.

3. Work to Accomplish:

a. Contact corrosion or maintenance engineers of operators in the area, including the:

(1) Oil transmission pipelines.

(2) Gas transmission pipelines.

(3) Gas distribution company.

(4) Telephone company.

(5) Water department.

(6) Electrical power company.

(7) Manufacturing plants in the area.

(8) Corrosion Coordinating Committee.

(9) Railroad (Do nearby railroads have signal system? Electrical propulsion - ac or dc?).

b. Data or Information to Get From Corrosion or Maintenance Engineers:

(1) Failure and corrosion experience.

(2) Is cathodic protection being used? Type? Rectifier locations?

(3) Personnel to contact for coordination tests - names, addresses, and telephone numbers.

(4) Place and time of Coordinating Committee meeting.

(5) Is stray current a problem? Its source? What structures have been affected?

(6) Are deicing salts used in streets?

(7) Are underground structures coated? Which ones? Type coating?

(8) Get drawings and other location information on all structures in the area. Mark those protected and locations of rectifiers.

APPENDIX A (continued)

(9) Are other new facilities planned for this area? Utilities, pipelines, etc.

(10) Will these new facilities be coated and cathodically protected?

(11) Is it objectionable to use impressed current cathodic protection?

SECTION B - EXISTING STRUCTURES

1. Meeting With A/E or Owner:

a. Find out what facilities are to be covered by this investigation. Also get data on all other facilities in the area.

(1) Look for the following:

a) Gas
b) Water
c) Buried electrical and grounding systems
d) Buried communications or signal systems
e) Tanks
f) Pilings
g) Bulkheads
h) Building structural members
i) Other

(2) What materials have been used and where:

a) Steel
b) Cast iron
c) Lead
d) Concrete
e) Copper
f) Aluminum
g) Other

(3) Construction methods used:

a) Coatings - Types?
b) Insulation between structures?
c) Are special fills being used?
d) Road and railroad casings? Are they insulated?
e) Type of pipe joints - weld, flange, dresser, other?
f) Type of grounding connecting cables?
g) Layout of structures (distance between those of varying materials, etc.)?
h) Roadways - Will deicing salts leach down into buried structures?
i) Lawns - Their location. Is it objectionable to install abovegrade test stations, etc., in or near them?
j) Pavement - Its location and type. What buried facilities will be placed under it?

APPENDIX A (continued)

k) Have test wires been installed on buried structures?
l) Where can connections to buried structures be made? Exposed valves, sections of pipe, etc.

b. Get complete drawings of all facilities:

(1) The following are usually included:
a) Electrical
b) Mechanical
c) Communications
d) Fire protection
e) Piling
f) Fuel systems
g) Storage tanks

(2) Be sure they are the latest.

(3) Ask to be kept advised of any changes.

(4) Test station locations.

(5) Test station wiring diagrams.

(6) Insulation joint locations.

(7) Insulation joint types.

c. Get the following information on ownership of facilities:

(1) Gas, water, power, telephone, etc. - Which are to be included in project? Which are "utility owned?"

(2) Where does utility's ownership end and plant's jurisdiction begin?

(3) Will the utility install insulation?

(4) Are utility companies using cathodic protection?

(5) Have the utility companies made any tests or investigations on the systems covered by this survey?

d. What life does the owner expect from facilities?

e. What does a corrosion failure cost? (Each type facility.)

f. Are any facilities extremely critical? (No failures of any kind to be tolerated because of cost or hazard.)

g. Have any corrosion failures been experienced?

(1) How many?

APPENDIX A (continued)

(2) When (dates)?

(3) Where? (Mark on drawings.)

(4) What was their appearance?

h. Have other failures occurred? (Investigate to be sure they were not really corrosion.)

i. Is direct current being used anywhere in this plant or nearby? Get:

(1) Complete information on where and why.

(2) Wiring diagrams and schematics.

(3) Method of grounding.

j. Are any abandoned facilities located in the vicinity? (Metal pipes, etc., may be used as ground beds.) Are they connected or to be connected to anything else?

k. Are additional facilities planned? (Immediate or long range.) If so, get the following information:

(1) Type and methods of construction.

(2) Probable location.

(3) How will they be connected to existing facilities?

(4) Will direct current be used?

2. Field Tests That Should Be Conducted:

a. Soil resistivity. If site is uniform, take 5-foot and 10-foot (usual depth of buried structures) readings at suitably spaced grid (20-foot and 100-foot readings may be required). Do not exceed 100-foot spacing with vibroground instrument. If route of piping or structure is known, follow the route. Take readings of fill, if any.

b. Soil pH. Take pH samples at same places as resistivity, if soil is moist.

c. Soil samples and water samples (steam riser, etc.). Take samples for sulfides and sulfate (and pH) at representative grid locations. (Minimum of six.)

d. Structure-to-soil voltage (at discretion of engineer):

(1) A thorough test of bare structure requires one over structure and one on each side every 25 feet.

(2) Coated structure - less frequent readings are needed.

APPENDIX A (continued)

e. IR drop (get at least one on every structure).

(1) Always test external circuit resistance.

(2) Correct readings if necessary.

(3) Be sure to indicate polarity of all readings.

f. Voltage between structures. Test voltage between all metallic structures. (Be sure to indicate polarity of each reading.)

g. Insulating joint - Test resistance of all known joints and look for others. Use four connections (two on each side of joint) with DC method.

h. For mechanical pipe joints:

(1) Test each piping system to find out if mechanical joints exist.

(2) Test representative number of mechanical joints to determine quantitative resistance per joint.

(3) Be sure to use the four point contact method with direct current.

i. Electrical and communications cables in duct:

(1) All electrical tests at each manhole:

a) As in b, e, and f above.
b) Be sure to test voltage between all cables in multiple run duct systems.

(2) Visually inspect all hardware in each manhole:

a) Brackets
b) Bonds
c) Condition of cables
d) Note material of each component and its condition
e) Note fastening methods and insulation between components

j. Investigate stray current:

(1) Stray currents must be indicated by abnormal structure-to-soil voltages or IR drop. (Either steady or fluctuating.)

(2) If stray current is suspected, investigate:
a) Any possible source of direct current in the area.
b) Operating cathodic protection.

(3) Have suspected source turned off and on to establish its affect on any structure.

APPENDIX A (continued)

(4) Get additional IR drop and voltage readings to establish circuit.

k. Current requirement test (for cathodic protection). At least cursory current requirement tests should usually be conducted if there is any chance of using cathodic protection at the site.

(1) Test using an artificial ground bed for both magnesium anode and impressed current designs.
(2) Extent of testing is determined by the scope of work laid out by the client. (Is all design data to be included with this survey?)

l. For existing cathodic protection:

(1) Visually inspect all equipment.

(2) Test to determine protection being given and possible interference to other structures.

(3) Get operating record.

(4) Find out when installed and turned on.

m. Miscellaneous - Note any other corrosion problems (chemical, water, atmospheric, etc.) that could use further detailed study.

3. Consulting Work To Be Accomplished:

a. Contact all plant personnel who have knowledge of structures being studied and get all possible information from them.

b. Contact corrosion and maintenance engineers or operators in the area, including the:

(1) Oil transmission pipelines.

(2) Gas transmission pipelines.

(3) Gas distribution company.

(4) Telephone company.

(5) Water department.

(6) Electrical power company.

(7) Manufacturing plants in the area.

(8) Corrosion Coordinating Committee.

(9) Railroad (Do nearby railroads have signal systems? Electrical propulsion - AC or DC?)

APPENDIX A (continued)

c. Data to get from those contacted in b above:

(1) Failure and corrosion experience.

(2) Is cathodic protection being used? Type? Rectifier locations?

(3) Personnel to contact for coordination tests - names, addresses, and telephone numbers.

(4) Place and time of Coordinating Committee meetings.

(5) Is stray current a problem? Its source? What structures have been affected?

(6) Are deicing salts used in streets?

(7) Are underground structures coated? Which ones? Type coating?

(8) Get drawings or other location information on all structures in the area. Mark those protected and locations of rectifiers.

(9) Are other new facilities planned for this area? Utilities, pipelines, etc.

(10) Will these new facilities be coated and cathodically protected?

(11) Is it objectionable to use impressed current cathodic protection?

THIS PAGE INTENTIONALLY LEFT BLANK

APPENDIX B

ECONOMIC LIFE GUIDELINES*

To provide a basis for comparison between competing projects, economic lives are established for the general investment classifications listed below. These are guidelines to be used in the absence of better information. However, due to the constraints of mission life and technological life, the economic life chosen should not exceed the applicable figure below.

1. ADP Equipment..... 8 years

2. Buildings

   a. Permanent..... 25 years

   b. Semipermanent, nonwood..... 25 years

   c. Semipermanent, wood..... 20 years

   d. Temporary or rehabilitated..... 15 years

3. Operating Equipment..... 25 years

4. Utilities, Plants, and Utility Distribution Systems..... 25 years

   (This category includes investment projects for electricity, water, gas, telephone, and similar utilities.)

5. Energy Conserving Assets

   a. Insulation, solar screens, heat recovery systems, and solar energy installations..... 25 years

   b. Energy Monitoring and Control Systems..... 15 years

   c. Controls (e.g., thermostats, limit switches, automatic ignition devices, clocks, photocells, flow controls, temperature sensors,etc.)..... 15 years

   d. Refrigeration compressors..... 15 years

*Source: NAVFAC P-442, Economic Analysis Handbook.

THIS PAGE INTENTIONALLY LEFT BLANK

APPENDIX C

PROJECT YEAR DISCOUNT FACTORS

Table A PRESENT VALUE OF $1 (Single Amount--to be used when cash flows accrue in varying amounts each year)		Table B PRESENT VALUE OF $1 (Cumulative Uniform Series--to be used when cash flows accrue in the same amount each year)
Project Year	10%	10%
1	0.954	0.954
2	0.867	1.821
3	0.788	2.609
4	0.717	3.326
5	0.652	3.977
6	0.592	4.570
7	0.538	5.108
8	0.489	5.597
9	0.445	6.042
10	0.405	6.447
11	0.368	6.815
12	0.334	7.149
13	0.304	7.453
14	0.276	7.729
15	0.251	7.980
16	0.228	8.209
17	0.208	8.416
18	0.189	8.605
19	0.172	8.777
20	0.156	8.933
21	0.142	9.074
22	0.129	9.203
23	0.117	9.320
24	0.107	9.427
25	0.097	9.524
26	0.088	9.612
27	0.080	9.692
28	0.073	9.765
29	0.066	9.831
30	0.060	9.891

NOTE: Table A factors are based on continuous compounding at a 10 percent effective annual discount rate, assuming uniform cash flows throughout stated 1 year periods. Table A factors are approximated by an arithmetic average of beginning and end of year single amount factors found in standard present value tables. Table B factors represent the cumulative sum of Table A factors through any given project year. Formulae for these factors are provided in Appendix D.

THIS PAGE INTENTIONALLY LEFT BLANK

APPENDIX D

PRESENT VALUE FORMULAE

Project Year 10 Percent Discount Factors

Table A Single Amount Factor:

$$a_n = (e^r - 1)/re^n r = 0.1/r(1.1)^n$$

Table B Cumulative Uniform Series Factor:

$$b_n = (e^{nr} - 1)/re^n r = [(1.1)^n - 1]/r(1.1)^n$$

where

n = number of years

e = 2.718281828459..., the base of the natural logarithms

r = ln(1 + R) = ln(1.1) = 0.09531018..., and

R = 0.10, the effective annual discount rate

THIS PAGE INTENTIONALLY LEFT BLANK

APPENDIX E

DOT REGULATIONS

Subpart I-Requirements for Corrosion Control

Source: Amdt. 192-4, 36 FR 12302, June 30, 1971, unless otherwise noted.

N 192.451 Scope.

(a) This subpart prescribes minimum requirements for the protection of metallic pipelines from external, internal, and atmospheric corrosion.

[Amdt. 192-4, 36 FR 12302, June 30, 1971, as amended by Amdt. 192-27, 41 FR 34606, Aug. 16, 1976; Amdt. 192-33, 43 FR 39389, Sept. 5, 1978]

- - -

N 192.452 Applicability to converted pipelines.

Notwithstanding the date the pipeline was installed or any earlier deadlines for compliance, each pipeline which qualifies for use under this part in accordance with N 192.14 must meet the requirements of this subpart specifically applicable to pipelines installed before August 1, 1971, and all other applicable requirements within 1 year after the pipeline is readied for service. However, the requirements of this subpart specifically applicable to pipeline installed after July 31, 1971, apply if the pipeline substantially meets those requirements before it is readied for service or it is a segment which is replaced, relocated, or substantially altered.

[Amdt. 192-30, 42 FR 60148, Nov. 25, 1977]

- - -

N 192.453 General.

Each operator shall establish procedures to implement the requirements of this subpart. These procedures, including those for the design, installation, operation and maintenance of cathodic protection systems, must be carried out by, or under the direction of, a person qualified by experience and training in pipeline corrosion control methods.

- - -

N 192.455 External corrosion control: Buried or submerged pipeline installed after July 31, 1971.

(a) Except as provided in paragraphs (b), (c), and (f) of this section, each buried or submerged pipeline installed after July 31, 1971, must be protected against external corrosion, including the following:

(1) It must have an external protective coating meeting the requirements of N 192.461.

APPENDIX E (continued)

(2) It must have a cathodic protection system designed to protect the pipeline in its entirety in accordance with this subpart, installed and placed in operation within one year after completion of construction.

(b) An operator need not comply with paragraph (a) of this section, if the operator can demonstrate by tests, investigation, or experience in the area of application, including, as a minimum, soil resistivity measurements and tests for corrosion accelerating bacteria, that a corrosive environment does not exist. However, within 6 months after an installation made pursuant to the preceding sentence, the operator shall conduct tests, including pipe-to-soil potential measurements with respect to either a continuous reference electrode or an electrode using close spacing, not to exceed 20 feet, and soil resistivity measurments at potential profile peak locations, to adequately evaluate the potential profile along the entire pipeline. If the tests made indicate that a corrosive condition exists, the pipeline must be cathodically protected in accordance with paragraph (a)(2) of this section.

(c) An operator need not comply with paragraph (a) of this section, if the operator can demonstrate by tests, investigation, or experience that-

(1) For a copper pipeline, a corrosive environment does not exist; or

(2) For a temporary pipeline with an operating period of service not to exceed 5 years beyond installation, corrosion during the 5-year period of service of the pipeline will not be detrimental to public safety.

(d) Notwithstanding the provisions of paragraph (b) or (c) of this section, if a pipeline is externally coated, it must be cathodically protected in accordance with paragraph (a)(2) of this section.

(e) Aluminum may not be installed in a buried or submerged pipeline if that aluminum is exposed to an environment with a natural pH in excess of 8, unless tests or experience indicate its suitability in the particular environment involved.

(f) This section does not apply to electrically isolated, metal alloy fittings in plastic pipelines if:

(1) For the size fitting to be used, and operator can show by tests, investigation, or experience in the area of application that adequate corrosion control provided by alloyage; and

(2) The fitting is designed to prevent leakage caused by localized corrosion pitting.

[Amdt. 192-4, 36 FR 12302, June 30, 1971, as amended at Amdt. 192-28, 42 FR 35654, July 11, 1977; Amdt. 192-39, 47 FR 9844, Mar. 8, 1982]

- - -

APPENDIX E (continued)

N **192.457 External corrosion control: Buried or submerged pipelines installed before August 1, 1971.**

(a) Except for buried piping at compressor, regulator, and measuring stations, each buried or submerged transmission line installed before August 1, 1971, that has an effective external coating must be cathodically protected along the entire area that is effectively coated, in accordance with this subpart. For the purposes of this subpart, a pipeline does not have an effective external coating if its cathodic protection current requirements are substantially the same as if it were bare. The operator shall make tests to determine the cathodic protection current requirements.

(b) Except for cast iron or ductile iron, each of the following buried or submerged pipelines installed before August 1, 1971, must be cathodically protected in accordance with this subpart in areas in which active corrosion is found:

(1) Bare or ineffectively coated transmission lines.

(2) Bare or coated pipes at compressor, regulator, and measuring stations.

(3) Bare or coated distribution lines. The operator shall determine the areas of active corrosion by electrical survey, or where electrical survey is impractical, by the study of corrosion and leak history records, by leak detection survey, or by other means.

(c) For the purpose of this subpart, active corrosion means continuing corrosion which, unless controlled, could result in a condition that is detrimental to public safety.

[Amdt. 192-4, 36 FR 12302, June 30, 1971, as amended by Amdt. 192-33, 43 FR 39390, Sept. 5, 1978]

- - -

N **192.459 External corrosion control: Examination of buried pipeline when exposed.**

Whenever an operator has knowledge that any portion of a buried pipeline is exposed, the exposed portion must be examined for evidence of external corrosion if the pipe is bare, or if the coating is deteriorated. If external corrosion is found, remedial action must be taken to the extent required by N 192.483 and the applicable paragraphs of NN 192.485, 192-487.487, or 192.489.

- - -

N **192-461 External corrosion control: Protective coating.**

(a) Each external protective coating, whether conductive or insulating, applied for the purpose of external corrosion control must:

APPENDIX E (continued)

(1) Be applied on a properly prepared surface;

(2) Have sufficient adhesion to the metal surface to effectively resist underfilm migration moisture;

(3) Be sufficiently ductile to resist cracking;

(4) Have sufficient strength to resist damage due to handling and soil stress; and

(5) Have properties compatible with any supplemental cathodic protection.

(b) Each external protective coating which is an electrically insulating type must also have low moisture absorption and high electrical resistance.

(c) Each external protective coating must be inspected just prior to lowering the pipe into the ditch and backfilling, and any damage detrimental to effective corrosion control must be repaired.

(d) Each external protective coating must be protected from damage resulting from adverse ditch conditions or damage from supporting blocks.

(e) If coated pipe is installed by boring, driving, or other similar method, precautions must be taken to minimize damage to the coating during installation.

- - -

N **192.463 External corrosion control: Cathodic protection**

(a) Each cathodic protection system required by this subpart must provide a level of cathodic protection that complies with one or more of the applicable criteria contained in Appendix D of this part. If none of these criteria is applicable, the cathodic protection system must provide a level of cathodic protection at least equal to that provided by compliance with one or more of these criteria.

(b) If amphoteric metals are included in a buried or submerged pipeline containing a metal of different anodic potential-

(1) The amphoteric metals must be electrically isolated from the remainder of the pipeline and cathodically protected; or

(2) The entire buried or submerged pipeline must be cathodically protected at a cathodic potential that meets the requirements of Appendix D of this part for amphoteric metals.

(c) The amount of cathodic protection must be controlled so as not to damage the protective coating or the pipe.

APPENDIX E (continued)

N 192.465 External corrosion control: Monitoring

(a) Each pipeline that is under cathodic protection must be tested at least once each calendar year, but with intervals not exceeding 15 months, to determine whether the cathodic protection meets the requirements of N 192.463. However, if tests at those intervals are impractical for separately protected short sections of mains or transmission lines, not in excess of 100 feet, or separately protected service lines, these pipelines may be surveyed on a sampling basis. At least 10 percent of these protected structures, distributed over the entire system must be surveyed each calendar year, with a different 10 percent checked each subsequent year, so that the entire system is tested in each 10-year period.

(b) Each cathodic protection rectifier or other impressed current power source must be inspected six times each calendar year, but with intervals not exceeding 2-1/2 months, to insure that it is operating.

(c) Each reverse current switch, each diode, and each interference bond whose failure would jeopardize structure protection must be electrically checked for proper performance six times each calendar year, but with intervals not exceeding 2-1/2 months. Each other interference bond must be checked at least once each calendar year, but with intervals not exceeding 15 months.

(d) Each operator shall take prompt remedial action to correct any deficiencies indicated by the monitoring.

(e) After the initial evaluation required by paragraphs (b) and (c) of N 192.455 and paragraph (b) of 192.457, each operator shall, at intervals not exceeding 3 years, revaluate its unprotected pipelines and cathodically protect them in accordance with this subpart in areas in which active corrosion is found. The operator shall determine the areas of active corrosion by electrical survey, or where electrical survey is impractical, by the study of corrosion and leak history records, by leak detection survey, or by other means.

[Amdt. 192-4, 36 FR 12302, June 30, 1971, as amended by Amdt. 192-33, 43 FR 39390, Sept. 5, 1978; Amdt. 192-35A, 45 FR 23441, Apr. 7, 1980]

- - -

N 192.467 External corrosion control: Electrical isolation.

(a) Each buried or submerged pipeline must be electrically isolated from other underground metallic structures, unless the pipeline and the other structures are electrically interconnected and cathodically protected as a single unit.

(b) One or more insulating devices must be installed where electrical isolation of a portion of a pipeline is necessary to facilitate the application of corrosion control.

APPENDIX E (continued)

(c) Except for unprotected copper inserted in ferrous pipe, each pipeline must be electrically isolated from metallic casings that are a part of the underground system. However, if isolation is not achieved because it is impractical, other measures must be taken to minimize corrosion of the pipeline inside the casing.

(d) Inspection and electrical tests must be made to assure that electrical isolation is adequate.

(e) An insulating device may not be installed in an area where a combustible atmosphere is anticipated unless precaution are taken to prevent arcing.

(f) Where a pipeline is located in close proximity to electrical transmission tower footings, ground cables or counterpoise, or in other areas where fault currents or unusual risk of lightning may be anticipated, it must be provided with protection against damage due to fault currents or lightning, and protective measures must also be taken at insulating devices.

[Amdt. 192-4, 36 FR 12302, June 30, 1971, as amended by Amdt. 192-33, 43 FR 39390, Sept. 5, 1978]

- -

N **192.469 External corrosion control: Test stations.**

Each pipeline under cathodic protection required by this subpart must have sufficient test stations or other contact points for electrical measurement to determine the adequacy of cathodic protection.

[Amdt. 192-27, 41 FR 34606, Aug. 16, 1976]

- - -

N **192.471 External corrosion control: Test leads.**

(a) Each test lead wire must be connected to the pipeline so as to remain mechanically secure and electrically conductive.

(b) Each test lead wire must be attached to the pipeline so as to minimize stress concentration on the pipe.

(c) Each bared test lead wire and bared metallic area at point of connection to the pipeline must be coated with an electrical insulating material compatible with the pipe coating and the insulation on the wire.

- - -

APPENDIX E (continued)

N **192.473 External corrosion control: Interference currents.**

(a) Each operator whose pipeline system is subjected to stray currents shall have in effect continuing program to minimize the detrimental effects of such currents.

(b) Each impressed current type cathodic protection system or galvanic anode system must be designed and installed so as the minimize any adverse effects on existing adjacent underground metallic structures.

[Amdt. 192-4, 36 FR 12302, June 30, 1971, as amended by Amdt. 192-33, 43 FR 39390, Sept. 5, 1978]

N **192.475 Internal corrosion control: General.**

(a) Corrosive gas may not be transported by pipeline, unless the corrosive effect of the gas on the pipeline has been investigated and steps have been taken to minimize internal corrosion.

(b) Whenever any pipe is removed from a pipeline for any reason, the internal surface must be inspected for evidence of corrosion. If internal corrosion is found.-

(1) The adjacent pipe must be investigated to determine the extent of internal corrosion:

(2) Replacement must be made to the extent required by the applicable paragraphs of NN 192.485, 192.487, or 192.489; and

(3) Steps must be taken to minimize the internal corrosion.

(c) Gas containing more than 0.1 grain of hydrogen sulfide per 100 standard cubic feet may not be stored in pipe-type or bottle-type holders.

[Amdt. 192-4, 36 FR 12302, June 30, 1971, as amended by Amdt. 192-33, 43 FR 39390, Sept. 5, 1978]

- - -

N **192.477 Internal corrosion control: Monitoring.**

If corrosive gas is being transported, coupons or other suitable means must be used to determine the effectiveness of the steps taken to minimize internal corrosion. Each coupon or other means of monitoring internal corrosion must be checked two times each calendar year, but with intervals not exceeding 7-1/2 months.

[Amdt. 192-33, 43 FR 39390, Sept. 5, 1978]

- - -

APPENDIX E (continued)

N **192.479 Atmospheric corrosion control: General.**

(a) Pipelines installed after July 31, 1971. Each aboveground pipeline or portion of a pipeline installed after July 31, 1971 that is exposed to the atmosphere must be cleaned and either coated or jacketed with a material suitable for the prevention of atmospheric corrosion. An operator need not comply with this paragraph, if the operator can demonstrate by test, investigation, or experience in the area of application, that a corrosive atmosphere does not exist.

(b) Pipelines installed before August 1, 1971. Each operator having an above-ground pipeline or portion of a pipeline installed before August 1, 1971 that is exposed to the atmosphere, shall-

(1) Determine the areas of atmospheric corrosion on the pipeline;

(2) If atmospheric corrosion is found, take remedial measures to the extent required by the applicable paragraphs of NN 192.485, 192.487, or 192.489; and

(3) Clean and either coat or jacket the areas of atmospheric corrosion on the pipeline with a material suitable for the prevention at atmospheric corrosion.

[Amdt. 192-4, 36 FR 12302, June 30, 1971, as amended by Amdt. 192-33, 43 FR 39390, Sept. 5, 1978]

- - -

N **192.481 Atmospheric corrosion control: Monitoring.**

After meeting the requirements of N 192.479 (a) and (b), each operator shall, at intervals not exceeding 3 years for onshore pipelines and at least once each calendar year, but with intervals not exceeding 15 months, for offshore pipelines, re-evaluate each pipeline that is exposed to the atmosphere and take remedial action whenever necessary to maintain protection against atmospheric corrosion.

[Amdt. 192-33, 43 FR 39390, Sept. 5, 1978]

- - -

N **192.483 Remedial measures: General.**

(a) Each segment of metallic pipe that replaces pipe removed from a buried or submerged pipeline because of external corrosion must have a properly prepared surface and must be provided with an external protective coating that meets the requirements of N 192.461.

(b) Each segment of metallic pipe that replaces pipe removed from a buried or submerged pipeline because of external corrosion must be cathodically protected in accordance with this subpart.

APPENDIX E (continued)

(c) Except for cast iron or ductile iron pipe, each segment of buried or submerged pipe that is required to be repaired because of external corrosion must be cathodically protected in accordance with this subpart.

- - -

N **192.485 Remedial measures: Transmission lines.**

(a) General corrosion. Each segment of transmission line with general corrosion and with a remaining wall thickness less than that required for the maximum allowable operating pressure of the pipeline must be replaced or the operating pressure reduced commensurate with the strength of the pipe based on actual remaining wall thickness. However, if the area of general corrosion is small, the corroded pipe may be repaired. Corrosion pitting so closely grouped as to affect the overall strength of the pipe is considered general corrosion for the purpose of this paragraph.

(b) Localized corrosion pitting. Each segment of transmission line pipe with localized corrosion pitting to a degree where leakage might result must be replaced or repaired, or the operating pressure must be reduced commensurate with the strength of the pipe, based on the actual remaining wall thickness in the pits.

[Amdt. 192-4, 36 FR 12302, June 30, 1971, as amended by Amdt. 192-33, 43 FR 39390, Sept. 5, 1978]

- - -

N **192.487 Remedial measures: Distribution lines other than cast iron or ductile iron lines.**

(a) General corrosion. Except for cast iron or ductile iron pipe, each segment of generally corroded distribution line pipe with a remaining wall thickness less than that required for the maximum allowable operating pressure of the pipeline, or a remaining wall thickness less than 30 percent of the nominal wall thickness, must be replaced. However, if the area of general corrosion is small, the corroded pipe may be repaired. Corrosion pitting so closely grouped as to affect the overall strength of the pipe is considered general corrosion for the purpose of this paragraph.

(b) Localized corrosion pitting. Except for cast iron or ductile iron pipe, each segment of distribution line pipe with localized corrosion pitting to a degree where leakage might result must be replaced or repaired.

- - -

N **192.489 Remedial measures: Cast iron and ductile iron pipelines.**

(a) General graphitization. Each segment of cast iron or ductile iron pipe on which general graphitization is found to a degree where a fracture or any leakage might result, must be replaced.

APPENDIX E (continued)

(b) Localized graphitization. Each segment of cast iron or ductile iron pipe on which localized graphitization is found to a degree where any leakage might result, must be replaced or repaired or sealed by internal sealing methods adequate to prevent or arrest any leakage.

- - -

N **192.491 Corrosion control records**

(a) Each operator shall maintain records or maps to show the location of cathodically protected piping, cathodic protection facilities, other than unrecorded galvanic anodes installed before August 1, 1971, and neighboring structures bonded to the cathodic protection system.

(b) Each of the following records must be retained for as long as the pipeline remains in service:

(1) Each record or map required by paragraph (a) of this section.

(2) Records of each test, survey, or inspection required by this subpart, in sufficient detail to demonstrate the adequacy of corrosion control measures or that a corrosive condition does not exist.

[Amdt. 192-4, 36 FR 12302, June 30, 1971, as amended by Amdt. 192-33, 43 FR 39390, Sept. 5, 1978]

- - -

Appendix D - Criteria For Cathodic Protection And Determination Of Measurements

I. Criteria for cathodic protection

A. Steel, cast iron, and ductile iron structures.

(1) A negative (cathodic) voltage of at least 0.85 volt, with reference to a saturated copper-copper sulfate half cell. Determination of this voltage must be made with the protective current applied, and in accordance with sections II and IV of this appendix.

(2) A negative (cathodic) voltage shift of at least 300 millivolts. Determination of this voltage shift must be made with the protective current applied, and in accordance with sections II and IV of this appendix. This criterion of voltage shift applies to structures not in contact with metals of different anodic potentials.

(3) A minimum negative (cathodic) polarization voltage shift of 100 millivolts. This polarization voltage shift must be determined in accordance with sections III and IV of this appendix.

APPENDIX E (continued)

(4) A voltage at least as negative (cathodic) as that originally established at the beginning of the Tafel segment of the E-log-I curve. This voltage must be measured in accordance with section IV of this appendix.

(5) A net protective current from the electrolyte into the structure surface as measured by an earth current technique applied at predetermined current discharge (anodic) points of the structure.

B. Aluminum structures.

(1) Except as provided in paragraphs (3) and (4) of this paragraph, a minimum negative (cathodic) voltage shift of 150 millivolts, produced by the application of protective current. The voltage shift must be determined in accordance with sections II and IV of this appendix.

(2) Except as provided in paragraph (3) and (4) of this paragraph, a minimum negative (cathodic) polarization voltage shift of 100 millivolts. This polarization voltage shift must be determined in accordance with sections III and IV of this appendix.

(3) Notwithstanding the alternative minimum criteria in paragraphs (1) and (2) of this paragraph, aluminum, if cathodically protected at voltages in excess of 1.20 volts as measured with reference to a copper-copper sulfate half cell, in accordance with section IV of this appendix, and compensated for the voltage (IR) drops other than those across the structure-electrolyte boundary may suffer corrosion resulting from the build-up of alkali on the metal surface. A voltage in excess of 1.20 volts may not be used unless previous test results indicate no appreciable corrosion will occur in the particular environment.

(4) Since aluminum may suffer from corrosion under high pH conditions, and since application of cathodic protection tends to increase the pH at the metal surface, careful investigation or testing must be made before applying cathodic protection to stop pitting attack on aluminum structures in environments with a natural pH in excess of 8.

C. Copper structures. A minimum negative (cathodic) polarization voltage shift of 100 millivolts. This polarization voltage shift must be determined in accordance with sections III and IV of this appendix.

D. Metals of different anodic potentials. A negative (cathodic) voltage, measured in accordance with section IV of this appendix, equal to that required for the most anodic metal in the system must be maintained. If amphoteric structures are involved that could be damaged by high alkalinity covered by paragraphs (3) and (4) of paragraph B of this section, they must be electrically isolated with insulting flanges, or the equivalent.

APPENDIX E (continued)

II. Interpretation of voltage measurement. Voltage (IR) drops other than those across the structure-electrolyte boundary must be considered for valid interpretation of the voltage measurement in paragraphs A(1) and (2) and paragraph B(1) of section I of this appendix.

III. Determination of polarization voltage shift. The polarization voltage shift must be determined by interrupting the protective current and measuring the polarization decay. When the current is initially interrupted, an immediate voltage shift occurs. The voltage reading after the immediate shift must be used as the base reading from which to measure polarization decay in paragraphs A(3), B(2), and C of section I of this appendix.

IV. Reference half cells. A. Except as provided in paragraphs B and C of this section, negative (cathodic) voltage must be measured between the structure surface and a saturated copper-copper sulfate half cell contacting the electrolyte.

B. Other standard reference half cells may be substituted for the saturated copper-copper sulfate half cell. Two commonly used reference half cells are listed below along with their voltage equivalent to -0.85 volt as referred to a saturated copper-copper sulfate half cell:

(1) Saturated KCl calomel half cell: -0.78 volt.

(2) Silver-silver chloride half cell used in sea water: -0.80 volt.

C. In addition to the standard reference half cells, an alternate metallic material or structure may be used in place of the saturated copper-copper sulfate half cell if its potential stability is assured and if its voltage equivalent referred to a saturated copper-copper sulfate half cell is established.

[Amdt. 192-4, 36 FR 12305, June 30, 1971]

- - -

N **195.236 External corrosion protection.**

Each component in the pipeline system must be provided with protection against external corrosion.

- - -

N **195.238 External coating.**

(a) No pipeline system component may be buried or submerged unless that component has an external protective coating that-

(1) Is designed to mitigate corrosion of the buried or submerged component;

(2) Has sufficient adhesion to the metal surface to prevent underfilm migration of moisture;

APPENDIX E (continued)

(3) Is sufficiently ductile to resist cracking;

(4) Has enough strength to resist damage due to handling and soil stress; and

(5) Supports any supplemental cathodic protection.

In addition, if an insulating-type coating is used it must have low moisture absorption and provide high electrical resistance.

(b) All pipe coating must be inspected just prior to lowering the pipe into the ditch or submerging the pipe, and any damage discovered must be repaired.

- - -

N **195.242 Cathodic protection system.**

(a) A cathodic protection system must be installed for all buried or submerged facilities to mitigate corrosion that might result in structural failure. A test procedure must be developed to determine whether adequate cathodic protection has been achieved.

(b) A cathodic protection system must be installed not later than 1 year after completing the construction.

- - -

N **195.244 Test leads.**

(a) Except for offshore pipelines, electrical test leads used for corrosion control or electrolysis testing must be installed at intervals frequent enough to obtain electrical measurements indicating the adequacy of the cathodic protection.

(b) Test leads must be installed as follows:

(1) Enough looping or slack must be provided to prevent test leads from being unduly stressed or broken during backfilling.

(2) Each lead must be attached to the pipe so as to prevent stress concentration on the pipe.

(3) Each lead installed in a conduit must be suitably insulated from the conduit.

- - -

N **195.414 Cathodic protection.**

(a) No operator may operate an interstate pipeline after March 31, 1973, or an intrastate pipeline after October 19, 1988, that has an effective external surface coating material, unless that pipeline is cathodically

APPENDIX E (continued)

protected. This paragraph does not apply to breakout tank areas and buried pumping station piping. For the purposes of this subpart, a pipeline does not have an effective external coating and shall be considered bare, if the cathodic protection current requirements are substantially the same as if it were bare.

(b) Each operator shall electrically inspect each bare interstate pipeline before April 1, 1975, and each bare intrastate pipeline before October 20, 1990 to determine any areas in which active corrosion is taking place. The operator may not increase its established operating pressure on a section of bare pipeline until the section has been so electrically inspected. In any areas where active corrosion is found, the operator shall provide cathodic protection. Section 195.416 (f) and (g) apply to all apply to all corroded pipe that is found.

(c) Each operator shall electrically inspect all breakout tank areas and buried pumping station piping on interstate pipelines before April 1, 1973, and on intrastate pipelines before October 20, 1988 as to the need for cathodic protection, and cathodic protection shall be provided where necessary.

[Amdt. 195-33, 50 FR 15899, Apr. 23, 1985; 50 FR 38660, Sept. 24, 1985]

- - -

N **195.416 External corrosion control.**

(a) Each operator shall, at intervals not exceeding 15 months, but at least once each calendar year, conduct tests on each underground facility in its pipeline systems that is under cathodic protection to determine whether the protection is adequate.

(b) Each operator shall maintain the test leads required for cathodic protection in such a condition that electrical measurements can be obtained to ensure adequate protection.

(c) Each operator shall, at intervals not exceeding 2-1/2 months, but at least six times each calendar year, inspect each of its cathodic protection rectifiers.

(d) Each operator shall, at intervals not exceeding 5 years, electrically inspect the bare pipe in its pipeline system that is not cathodically protected and must study leak records for that pipe to determine if additional protection is needed.

(e) Whenever any buried pipe is exposed for any reason, the operator shall examine the pipe for evidence of external corrosion. If the operator finds that there is active corrosion, that the surface of the pipe is generally pitted, or that corrosion has caused a leak, it shall investigate further to determine the extent of the corrosion.

APPENDIX E (continued)

(f) Any pipe that is found to be generally corroded so that the remaining wall thickness is less than the minimum thickness required by the pipe specification tolerances must either be replaced with coated pipe that meets the requirements of the part or, if the area is small, must be repaired. However, the operator need not replace generally corroded pipe if the operating pressure is reduced to be commensurate with the limits on operating pressure specified in this subpart, based on the actual remaining wall thickness.

(g) If localized corrosion pitting is found to exist to a degree where leakage might result, the pipe must be replaced or repaired, or the operating pressure must be reduced commensurate with the strength of the pipe based on the actual remaining wall thickness in the pits.

(h) Each operator shall clean, coat with material suitable for the prevention of atmospheric corrosion, and, maintain this protection for, each component in its pipeline system that is exposed to the atmosphere.

[Amdt. 195-22, 46 FR 38360, July 27, 1981, as amended by Amdt, 195-24, 47 FR 46852, Oct. 21, 1982; Amdt. 195-31, 49 FR 36384, Sept. 17, 1984]

- - -

N **195.418 Internal corrosion control.**

(a) No operator may transport any hazardous liquid that would corrode the pipe or other components of its pipeline system, unless it has investigated the corrosive effect of the hazardous liquid on the system and has taken adequate steps to mitigate corrosion.

(b) If corrosion inhibitors are used to mitigate internal corrosion the operator shall use inhibitors in sufficient quantity to protect the entire part of the system that the inhibitors are designed to protect and shall also use coupons or other monitoring equipment to determine their effectiveness.

(c) The operator shall, at intervals not exceeding 7-1/2 months, but at least twice each calendar year, examine coupons or other types of monitoring equipment to determine the effectiveness of the inhibitors or the extent of any corrosion.

(d) Whenever any pipe is removed from the pipeline for any reason, the operator must inspect the internal surface for evidence of corrosion. If the pipe is generally corroded such that the remaining wall thickness is less than the minimum thickness required by the pipe specification tolerances, the operator shall investigate adjacent pipe to determine the extent of the corrosion. The corroded pipe must be replaced with pipe that meets the requirements of this part or, based on the actual remaining wall thickness, the operating pressure must be reduced to be commensurate with the limits on operating pressure specified in the subpart.

[Amdt. 195-22, 46 FR 38360, July 27, 1981, as amended by Amdt. 195-20B, 46 FR 38922. July 30, 1981; Amdt. 195-24, 47 FR 46852, Oct. 21, 1982]

THIS PAGE INTENTIONALLY LEFT BLANK

REFERENCES

NOTE: Unless otherwise specified in the text, users of this handbook should utilize the latest revisions of the documents cited herein.

FEDERAL/MILITARY SPECIFICATIONS, STANDARDS, BULLETINS, HANDBOOKS, AND NAVFAC GUIDE SPECIFICATIONS:

The following specifications, standards, and handbooks form a part of this document to the extent specified herein. Unless otherwise indicated, copies are available from Commanding Officer, Naval Publications and Forms Center, ATTENTION: NPODS, 5801 Tabor Avenue, Philadelphia, PA 19120-5099.

SPECIFICATION

MILITARY

MIL-A-18001	Anodes, Corrosion Preventive, Zinc; Slab Disc and Rod-Shaped

NAVY MANUALS, DRAWINGS, P-PUBLICATIONS, AND MAINTENANCE OPERATING MANUALS:

Available from Commanding Officer, Naval Publications and Forms Center (NPFC), 5801 Tabor Avenue, Philadelphia, PA 19120-5099. To Order these documents: Government agencies must use the Military Standard Requisitioning and Issue Procedure (MILSTRIP); the private sector must write to NPFC, ATTENTION: Cash Sales, Code 1051, 5801 Tabor Avenue, Philadelphia, PA 19120-5099.

MO-306	Corrosion Prevention and Control
MO-307	Cathodic Protection Systems Maintenance
P-442	Economic Analysis Handbook

OTHER GOVERNMENT DOCUMENTS AND PUBLICATIONS:

The following Government publication forms a part of this document to the extent specified herein.

DEPARTMENT OF TRANSPORTATION (DOT)

Code of Federal Regulations, No. 49

(Unless otherwise indicated, copies are available from Superintendent of Documents, U.S. Government Printing Office, Washington, DC 20402.)

NON-GOVERNMENT PUBLICATIONS:

The following publications form a part of this document to the extent specified herein. Unless otherwise specified, the issues of the documents which are DOD adopted are those listed in the Department of Defense Index of Specification & Standards (DODISS).

AMERICAN SOCIETY FOR TESTING AND MATERIALS (ASTM)

ASTM B-148-67	Standard Specification for Aluminum-Bronze Sand Castings (DOD adopted)

(Unless otherwise indicated, copies are available from American Society for Testing and Materials, 1916 Race Street, Philadelphia, PA 19103 Telephone (215) 299-5400.)

NATIONAL ASSOCIATION OF CORROSION ENGINEERS (NACE)

NACE RP-01-69	Recommended Practice for Control of External Corrosion on Underground or Submerged Metallic Piping Systems
NACE RP-02-85	Control of External Corrosion on Metallic Buried, Partially Buried, or Submerged Liquid Storage Systems
NACE RP-05-72	Design, Installation, Operation, and Maintenance of Impressed Current Deep Groundbeds

(Unless otherwise indicated, copies are available from National Association of Corrosion Engineers (NACE), P.O. Box 218340, Houston, Texas 77218.)

NATIONAL FIRE PROTECTION ASSOCIATION (NFPA)

NEC 70	National Electrical Code (DOD adopted)

(Unless otherwise indicated, copies are available from National Fire Protection Association (NFPA), Batterymarch Park, Quincy, MA 02269.)

GLOSSARY

ADP. Automatic Data Processor-Computer.

Alkyds. A family of protective coatings based upon the use of alkyd resins.

Anaerobic. Free of air or uncombined oxygen; anaerobic bacteria are those that do not use oxygen in their life cycle.

Annular Space. The separation between two cylindrical components.

Anode. The electrode in an electrolytic cell at which oxidation is the principal reaction. (Electrons flow away from the anode in the external circuit. It is usually the electrode where corrosion occurs and metal ions enter solution.)

Anode-to-Electrolyte Potential. The electrochemical energy difference between the anode in an electrochemical cell and the surrounding environment.

Anodic 1. When used to compare the potentials of two metals or a direction of change of potential, the more negative.

Anodic 2. A phenomenon occuring at the anode of an electrochemical cell such as anodic polarization.

As-Built. A drawing which reflects tha actual configuration of a structure when completed.

ASTM. American Society of Testing and Materials.

Augered Holes. Excavations made by the use of a screw type excavator or auger.

AWG. American Wire Gauge - a standard system for measuring the conductor size in electrical wires and cables.

Backfill. Material used to refill an excavation. Usually material used to surround either a sacrificial or impressed current anode. Also, the material used to refill the ditch surrounding a pipeline.

Bentonite. A natural clay. In sacrificial anodes, it is commonly used as a component of the backfill around the anode.

Brinell. A measurement of metal hardness performed using a standard method.

Carbonaceous. Having a high content of carbon such as carbonaceous backfill.

Carcenogenic. Cancer causing such as carcenogenic compounds.

Cast-In Core. Same as cast-in straps.

Cast-In Straps. Metal (usually steel) sections placed inside sacrificial anodes during the casting process which are used for attaching the anodes to the structure to be protected.

Cathodic 1. When used to compare the potentials of two metals or a direction of change of potential, the more positive.

Cathodic 2. A phenomenon occuring at the cathode of an electrochemical cell such as cathodic polarization (antonym: anodic).

Cathodic Protection. A technique to prevent the corrosion of a metal surface by making that surface the cathode of an electrochemical cell.

Corrosivity. A measurement of the tendency of an environment to cause corrosion such as in a high corrosivity soil.

Dielectric. A nonconductor of electricity or insulator.

Disbondment. Separation between a coating and substrate.

EFD. Engineering Field Division - An organization within the Naval Facilities Engineering Command responsible for functions in and located within a specific geogrpahical area.

Electrochemical. A phenomenon where chemical change occurs through the indirect exchange of electrons.

Electrogalvanized. Coated with zinc in an electroplating process. Electrogalvanized zinc coatings are usually much thinner than hot-dip galvanized zinc coatings.

Electrolyte. A chemical substance or mixture, usually liquid, containing ions that migrate in an electric field. Usually refers to the soil or liquid adjacent to and in contact with a buried or submerged metallic structure, including the moisture or other chemicals contained in it.

Ellipsoidal. Having the shape generated through the rotation of an ellipse.

Embrittlement. Causing a loss of ductility such as hydrogen embrittlement where the introduction of hydrogen into a metal reduces its ductility.

Extrusions. Materials formed by forcing the material through an orifice or die.

FEP. Flourinated Ethylene Propylene - An insulating polymer.

Flow-Protective Current. The movement of electrons in an electrical conductor or ions in an electrolyte which are associated with the cathodic protection of a structure.

Flush-Mounted. Attached very close to or touching the surface.

Full-Wave. In a rectifier, the production of pulsating direct current from both the positive and negative portions of the alternating current input. See half-wave.

Galvanic. Pertaining to the electrochemical interaction between two metals such as in galvanic couple or galvanic series.

Galvanic Anode. A metal which, because of its relative position in the galvanic series, provides sacrificial protection to metal or metals that are more noble in the series, when coupled in an electrolyte. The anodes are the current source in one type of cathodic protection.

Groundbed. An array of anodes, usually impressed current type, used in a cathodic protection system.

Half-Wave. In a rectifier, the production of pulsating direct current from only the positive or negative portion of the alternating current input. See full-wave.

HMWPE. High molecular weight polethylene. A high performance insulating material used for electrical cables.

HSCBCI. High silicon-chromium bearing cast iron. A material used as an impressed current cathodic protection system anode.

Ion. An electrically charged atom or molecule.

kWh. Kilowatt-hour. A measurement of electrical power consumption.

Magnetite. A form of iron oxide. Sometimes used for an impressed current anode.

Mastic. A thick coating or sealing material.

Micromhos. A measurement of electrical conductivity. A mho is a reciprocal ohm, a measurement of electric resistance.

Mill-Coated. Coated in a factory (antonym: field-coated).

Milliampere. One thousandth of an ampere. A measurement of electric current.

MV. Millivolt. One thousandth of a volt, a measurement of electric potential.

NACE. National Association of Corrosion Engineers.

NAVFAC. Naval Facilities Engineering Command.

Nichrome. An alloy of iron, nickel, and chromium which is used for wires with high electrical resistance.

Ohm-Centimeter. A measurement of bulk electrical resistivity of a material. A material having a resistance of one ohm when measured across opposite faces of a one centimeter cube has a resistivity of one ohm-centimeter. Equivalent to ohms per cubic centimeter.

Out-of-Phase. In alternating current electricity having the opposite polarity.

Over-The-Ditch-Coating. A field applied coating applied immediately before placing the pipe in the excavation.

Pad-Mounted. Usually refers to electrical equipment mounted on a raised foundation near ground level.

Passivate. A reduction in the current flow from an electrode due to either the flow of electric current, the formation of an insulating corrosion product, or a change in environment.

pH. A measurement of acidity or alkalinity of a solution. Specifically the negative logarithm of the hydrogen ion concentration. Ranges from 0 to 14 with 7 being neutral, lower than 7 acidic, and higher than 7 alkaline.

Photovoltaic. Capable of generating electric current directly from light.

Platinized. Coated with platinum. A family of impressed current anodes use platinum coatings over an inert substrate.

POL. Petroleum oil, lubricant. An acronym used for petroleum fuels and lubricants.

Pole-Mounted. Usually refers to electrical equipment mounted on a service pole.

Polyalkene. A type of insulating material based upon polymerization of alkene molecules.

Polychlorinated Biphenyls (PCBs). Chemical compounds formerly used as insulating and cooling liquids in electrical equipment. Due to their carcenogenic properties, they are no longer used in new equipment.

Polypropylene. An insulating material based upon polymerization of propylene molecules.

PVF2. A type of polyvinyl flouride used as an insulating material.

PZ Piling. A configuration of interlocking steel sheet piling commonly used for bulkheads.

Quaywall. A waterfront structure consisting of a bulkhead.

Recalcined. Refers to carbonaceous material which has been reheated to drive off additional volatile material subsequent to the initial heating process which changes coal to coke.

Retrofit. To modify an original construction.

Silverized. A type of lead with high silver content which is used as an impressed current anode.

Structure-to-Electrolyte Potential. (Also structure-to-soil potential or pipe-to-soil potential) The voltage difference between a buried metallic structure and the electrolyte which surrounds it as measured with respect to a reference electrode in contact with the electrolyte.

Sulphate. An ion containing one sulfur atom and four oxygen atoms. Also a chemical compound containing sulfate ions.

TFE. Tetrafluroethylene. A type of electrical insulating material.

Thermocouple. A combination of two metals which produce a potential difference between them, which is proportional to temperature.

Thermoelectric. Capable of generating electric current directly from heat.

Thermo-Welding. A technique which is used to join metals wherein an exothermic chemical reaction produces molten metal.

Wye. A method of connection of three-phase electrical circuits where all three phases are connected to a single point.

CUSTODIAN
NAVY - YD
ARMY
AIR FORCE

PREPARING ACTIVITY
NAVY - YD

PROJECT NO.
FACR- 0260

THIS PAGE INTENTIONALLY LEFT BLANK