UFC 4-171-01N
16 January 2004

# UNIFIED FACILITIES CRITERIA (UFC)

# DESIGN: AVIATION TRAINING FACILITIES

**APPROVED FOR PUBLIC RELEASE; DISTRIBUTION UNLIMITED**

UNIFIED FACILITIES CRITERIA (UFC)

# DESIGN: AVIATION TRAINING FACILITIES

Any copyrighted material included in this UFC is identified at its point of use.
Use of the copyrighted material apart from this UFC must have the permission of the copyright holder.

U.S. ARMY CORPS OF ENGINEERS

NAVAL FACILITIES ENGINEERING COMMAND (Preparing Activity)

AIR FORCE CIVIL ENGINEERING SUPPORT AGENCY

Record of Changes (changes indicated by **1**\ ... /**1**/ )

| Change No. | Date | Location |
|---|---|---|
| | | |
| | | |

# FOREWORD

The Unified Facilities Criteria (UFC) system is prescribed by MIL-STD 3007 and provides planning, design, construction, sustainment, restoration, and modernization criteria, and applies to the Military Departments, the Defense Agencies, and the DoD Field Activities in accordance with USD(AT&L) Memorandum dated 29 May 2002. UFC will be used for all DoD projects and work for other customers where appropriate.

UFC are living documents and will be periodically reviewed, updated, and made available to users as part of the Services' responsibility for providing technical criteria for military construction. Headquarters, U.S. Army Corps of Engineers (HQUSACE), Naval Facilities Engineering Command (NAVFAC), and Air Force Civil Engineer Support Agency (AFCESA) are responsible for administration of the UFC system. Defense agencies should contact the preparing service for document interpretation and improvements. Technical content of UFC is the responsibility of the cognizant DoD working group. Recommended changes with supporting rationale should be sent to the respective service proponent office by the following electronic form: Criteria Change Request (CCR). The form is also accessible from the Internet sites listed below.

UFC are effective upon issuance and are distributed only in electronic media from the following sources:

- Unified Facilities Criteria (UFC) Index http://65.204.17.188//report/doc_ufc.html.
- USACE TECHINFO Internet site http://www.hnd.usace.army.mil/techinfo/index.htm.
- NAVFAC Engineering Innovation and Criteria Office Internet site http://criteria.navfac.navy.mil.
- Construction Criteria Base (CCB) system maintained by the National Institute of Building Sciences at Internet site http://www.nibs.org/ccb.

Hard copies of UFC printed from electronic media should be checked against the current electronic version prior to use to ensure that they are current.

AUTHORIZED BY:

DONALD L. BASHAM, P.E.
Chief, Engineering and Construction Division
U.S. Army Corps of Engineers

DR. JAMES W WRIGHT, P.E.
Chief Engineer
Naval Facilities Engineering Command

KATHLEEN I. FERGUSON, P.E.
The Deputy Civil Engineer
DCS/Installations & Logistics
Department of the Air Force

Dr. GET W. MOY, P.E.
Director, Installations Requirements and Management
Office of the Deputy Under Secretary of Defense (Installations and Environment)

**CONTENTS**

Page

CHAPTER 1 INTRODUCTION

Paragraph 1-1 PURPOSE AND SCOPE ..... 1-1
1-2 APPLICABILITY ..... 1-1
1-2.1 General Building Requirements ..... 1-1
1-2.2 Safety ..... 1-1
1-2.3 Fire Protection ..... 1-1
1-2.4 Antiterrorism/Force Protection ..... 1-1

APPENDIX A MIL-HDBK 1027/4A..... A-1

# CHAPTER 1

# INTRODUCTION

1-1 **PURPOSE AND SCOPE**. This UFC is comprised of two sections. Chapter 1 introduces this UFC and provides a listing of references to other Tri-Service documents closely related to the subject. Appendix A contains the full text copy of the previously released Military Handbook (MIL-HDBK) on this subject. This UFC serves as criteria until such time as the full text UFC is developed from the MIL-HDBK and other sources.

This UFC provides general criteria for the design of aviation training facilities.

Note that this document does not constitute a detailed technical design, maintenance or operations manual, and is issued as a general guide to the considerations associated with the design of aviation training facilities.

1-2 **APPLICABILITY**. This UFC applies to all Navy service elements and Navy contractors; all other DoD agencies and contractors preparing designs of aviation training facilities may use this document if not explicitly directed otherwise.

1-2.1 **GENERAL BUILDING REQUIREMENTS**. All DoD facilities must comply with UFC 1-200-01, *Design: General Building Requirements*. If any conflict occurs between this UFC and UFC 1-200-01, the requirements of UFC 1-200-01 take precedence.

1-2.2 **SAFETY**. All DoD facilities must comply with DODINST 6055.1 and applicable Occupational Safety and Health Administration (OSHA) safety and health standards.

**NOTE**: All **NAVY** projects, must comply with OPNAVINST 5100.23 (series), *Navy Occupational Safety and Health Program Manual*. The most recent publication in this series can be accessed at the NAVFAC Safety web site: www.navfac.navy.mil/safety/pub.htm. If any conflict occurs between this UFC and OPNAVINST 5100.23, the requirements of OPNAVINST 5100.23 take precedence.

1-2.3 **FIRE PROTECTION**. All DoD facilities must comply with UFC 3-600-01, *Design: Fire Protection Engineering for Facilities*. If any conflict occurs between this UFC and UFC 3-600-01, the requirements of UFC 3-600-01 take precedence.

1-2.4 **ANTITERRORISM/FORCE PROTECTION**. All DoD facilities must comply with UFC 4-010-01, *Design: DoD Minimum Antiterrorism Standards for Buildings*. If any conflict occurs between this UFC and UFC 4-010-01, the requirements of UFC 4-010-01 take precedence.

# APPENDIX A

## MIL-HDBK 1027/4A
## AVIATION TRAINING FACILITIES

INCH-POUND

MIL-HDBK-1027/4A
09 MARCH 1998

SUPERSEDING
MIL-HDBK-1027/4
31 DECEMBER 1993

DEPARTMENT OF DEFENSE
HANDBOOK

# AVIATION TRAINING FACILITIES

AMSC N/A

AREA FACR

DISTRIBUTION STATEMENT A. Approved for public release; distribution is unlimited.

## ABSTRACT

This handbook is provided as basic design guidance for facilities covered by facility category codes 171-20 and 171-35 for use by experienced architects and engineers. The contents include design criteria for simulator facilities, maintenance training facilities, and aviation survival training center facilities.

# FOREWORD

This handbook has been developed from an evaluation of facilities in the shore establishment, from surveys of training manufacturer's facility requirements, and from selection of the best design practices of the Naval Facilities Engineering Command (NAVFACENGCOM), other Government agencies, and the private sector. This handbook was prepared using, to the maximum extent feasible, national professional society, association, and institute standards. Deviations from these criteria in the planning, engineering, design, and construction of naval shore facilities cannot be made without prior approval of NAVFACENGCOM Criteria Office.

Design cannot remain static any more than can the functions it serves or the technologies it uses. Recommendations for improvement are encouraged from within the Navy, other Government agencies, and the private sector and should be furnished on the DD Form 1426 provided inside the back cover to Commanding Officer, Southern Division, Naval Facilities Engineering Command, Code 0712DB, 2155 Eagle Drive, P.O. Box 190010, North Charleston, South Carolina 29419-9010; telephone (803) 820-7321.

DO NOT USE THIS HANDBOOK AS A REFERENCE DOCUMENT FOR PROCUREMENT OF FACILITIES CONSTRUCTION. IT IS TO BE USED IN THE PURCHASE OF FACILITIES ENGINEERING STUDIES AND DESIGN (FINAL PLANS, SPECIFICATIONS, AND COST ESTIMATES). DO NOT REFERENCE IT IN MILITARY OR FEDERAL SPECIFICATIONS OR OTHER PROCUREMENT DOCUMENTS.

TRAINING FACILITIES CRITERIA MANUALS

| Criteria Manual | Title | PA |
|---|---|---|
| MIL-HDBK-1027/1 | Firefighting School Facilities | LANTDIV |
| MIL-HDBK-1027/2 | General Training Facilities (Proposed) | SOUTHDIV |
| MIL-HDBK-1027/3 | Range Facilities and Miscellaneous Training Facilities other than Buildings | SOUTHDIV |
| MIL-HDBK-1027/4 | Aviation Training Facilities | SOUTHDIV |

AVIATION TRAINING FACILITIES

CONTENTS


| | | | Page |
|---|---|---|---|
| Section | 1 | INTRODUCTION | |
| | 1.1 | Scope | 1 |
| | 1.2 | Distribution of Responsibilities | 1 |
| | 1.3 | Background | 1 |
| | 1.3.1 | Simulator Facilities | 1 |
| | 1.3.2 | Maintenance Training Facilities | 2 |
| | 1.3.3 | Aviation Survival Training Center (ASTC) Facilities | 2 |
| | 1.4 | Planning Criteria | 2 |
| | 1.5 | Project Engineering (PE) Phase | 2 |
| | 1.6 | Construction Phasing | 3 |
| | 1.7 | Site Verification | 3 |
| | 1.8 | Operation and Maintenance Support Information | 4 |
| | 1.9 | Cancellation | 4 |
| Section | 2 | SIMULATOR FACILITIES | |
| | 2.1 | Functional Requirements | 5 |
| | 2.1.1 | Special Program Considerations | 5 |
| | 2.1.2 | Future Growth | 5 |
| | 2.2 | Facility Design | 6 |
| | 2.2.1 | Site Planning | 6 |
| | 2.2.2 | Architectural | 6 |
| | 2.2.2.1 | Adjacency | 6 |
| | 2.2.2.2 | Circulation | 8 |
| | 2.2.2.3 | Functional Priorities | 8 |
| | 2.2.2.4 | Spaces and Characteristics | 8 |
| | 2.2.2.5 | Interior Design | 16 |
| | 2.2.2.6 | Signs | 17 |
| | 2.2.2.7 | Windows | 19 |
| | 2.2.2.8 | Doors and Hardware | 19 |
| | 2.2.2.9 | Natural Lighting | 21 |
| | 2.2.2.10 | Building Thermal Insulation and Vapor Retarders | 21 |
| | 2.2.2.11 | Handicapped Design | 22 |
| | 2.2.2.12 | Elevators and Stairs | 22 |
| | 2.2.2.13 | Dumbwaiters | 22 |
| | 2.2.2.14 | Access Floor Systems | 22 |
| | 2.2.2.15 | Ceilings | 22 |
| | 2.2.2.16 | Walls | 23 |
| | 2.2.2.17 | Acoustical Control | 23 |
| | 2.2.3 | Landscape Architecture | 23 |
| | 2.2.3.1 | Site Analysis and Development Concept | 23 |
| | 2.2.3.2 | Planting | 23 |
| | 2.2.3.3 | Landscape Lighting | 24 |
| | 2.2.3.4 | Exterior Signs | 24 |
| | 2.2.3.5 | Utilities | 24 |
| | 2.2.3.6 | Site Furnishings | 24 |
| | 2.2.3.7 | Equipment Screens and Walls | 24 |
| | 2.2.3.8 | Selection of Plant Material | 24 |
| | 2.2.4 | Civil | 25 |

Page
2.2.4.1 Roads, Parking, and Walkways.....25
2.2.4.2 Handicapped Access.....25
2.2.4.3 Loading Dock Ramp Protection.....26
2.2.5 Structural.....26
2.2.5.1 Clearspan Requirements.....26
2.2.5.2 Weight Handling Equipment.....26
2.2.5.3 Floors.....26
2.2.5.4 Roof Loads.....27
2.2.6 Heating, Ventilating and Air Conditioning.....27
2.2.6.1 Design Conditions.....28
2.2.6.2 Ventilation.....28
2.2.6.3 Zoning, System Selection and Part Load Performance..28
2.2.6.4 Special Requirements for WTT and OFT.....28
2.2.6.5 Controls.....29
2.2.6 Trenches.....29
2.2.7 Plumbing.....29
2.2.7.1 Hydraulic Support and Pump Rooms.....30
2.2.7.2 Trenches.....30
2.2.7.3 Compressed Air.....30
2.2.7.4 Electric Water Coolers.....31
2.2.7.5 Waste Systems.....31
2.2.8 Electrical.....31
2.2.8.1 Closed Circuit Television.....31
2.2.8.2 Telecommunications.....31
2.2.8.3 Warning Lights and Signal Circuits.....31
2.2.8.4 Computers and Training Devices.....31
2.2.8.5 Lighting.....32
2.2.8.6 Lightning Protection.....32
2.2.8.7 Facility Low Voltage Power.....32
2.2.8.8 Intrusion Detection System (IDS).....32
2.2.8.9 Uninterruptible Power Supply (UPS).....33
2.2.8.10 400 Hz Power.....33
2.2.8.11 Facility Shielding.....33
2.2.8.12 Grounding.....33
2.2.9 Fire Protection.....33
2.2.10 Safety.....34
2.2.11 Security.....35
2.3 Collateral Equipment.....35
2.3.1 Collateral Equipment List.....35
2.3.2 Furniture/Equipment Footprint.....36
2.3.3 Training Aids.....36
2.3.3.1 Special Training Device Requirements.....36
2.3.3.2 Personal Computer (PC) Stations.....36
2.3.3.3 Audiovisual Requirements.....36
2.3.3.4 Electronic Information Delivery Systems (EIDS).....37
2.4 Supporting Functions and Utilities.....37
2.5 Supporting Personnel.....37
2.6 Special Contractor Support Spaces.....37
2.7 Environmental Requirements.....37

Page

Section 3 AVIATION MAINTENANCE TRAINING FACILITIES
3.1 Functional Requirements....57
3.2 Facility Design....57
3.2.1 Site Planning....57
3.2.2 Architectural....57
3.2.2.1 Adjacency....58
3.2.2.2 Circulation....58
3.2.2.3 Functional Priorities....58
3.2.2.4 Spaces and Characteristics....58
3.2.2.5 Interior Design....66
3.2.2.6 Signs....67
3.2.2.7 Windows....68
3.2.2.8 Doors and Hardware....71
3.2.2.9 Natural Lighting....71
3.2.2.10 Building Thermal Insulation and Vapor Retarders....71
3.2.2.11 Handicapped Design....71
3.2.2.12 Elevators and Stairs....72
3.2.2.13 Access Floor Systems....72
3.2.2.14 Ceilings....72
3.2.2.15 Walls....72
3.2.2.16 Acoustical Control....72
3.2.3 Landscape Architecture....72
3.2.3.1 Site Analysis and Development Concept....73
3.2.3.2 Planting....73
3.2.3.3 Landscape Lighting....73
3.2.3.4 Exterior Signs....73
3.2.3.5 Utilities....73
3.2.3.6 Site Furnishings....74
3.2.3.7 Equipment Screens and Walls....74
3.2.3.8 Selection of Plant Material....74
3.2.4 Civil....74
3.2.4.1 Roads, Parking and Walkways....74
3.2.4.2 Handicapped Access....75
3.2.4.3 Loading Dock Ramp Protection....75
3.2.5 Structural....75
3.2.5.1 Clearspan Requirements....75
3.2.5.2 Weight Handling Equipment....75
3.2.5.3 Floors....76
3.2.5.4 Roof Loads....76
3.2.6 Heating, Ventilating and Air Conditioning....76
3.2.6.1 Design Conditions....76
3.2.6.2 Ventilation....76
3.2.6.3 Zoning, System Selection and Part Load Performance..77
3.2.6.4 Controls....77
3.2.7 Plumbing....77
3.2.7.1 Mechanical Pump Rooms....77
3.2.7.2 Compressed Air....77
3.2.7.3 Electric Water Coolers....77
3.2.7.4 Waste Systems....77
3.2.7.5 Emergency Eyewash/Shower....77
3.2.8 Electrical....77

Page

3.2.8.1 Closed Circuit Television....78
3.2.8.2 Telecommunications....78
3.2.8.3 Computers and Training Devices....78
3.2.8.4 Lighting....78
3.2.8.5 Lightning Protection....79
3.2.8.6 Facility Low Voltage Power....79
3.2.8.7 Intrusion Detection System (IDS)....79
3.2.8.8 Uninterruptible Power Supply (UPS)....79
3.2.8.9 400 Hz Power....79
3.2.8.10 Facility Shielding....79
3.2.9 Fire Protection....79
3.2.10 Safety....80
3.2.11 Security....80
3.3 Collateral Equipment....81
3.3.1 Collateral Equipment List....81
3.3.2 Furniture/Equipment Footprint....81
3.3.3 Training Aids....81
3.3.3.1 Special Training Device Requirements....81
3.3.3.2 Audiovisual Requirements....82
3.3.3.3 Electronic Information Delivery Systems (EIDS)....83
3.4 Environmental Requirements....83

Section 4 AVIATION SURVIVAL TRAINING CENTER FACILITIES - PHYSIOLOGICAL
4.1 Functional Requirements....116
4.2 Facility Design....116
4.2.1 Site Planning....116
4.2.2 Architectural....116
4.2.2.1 Adjacency....117
4.2.2.2 Circulation....117
4.2.2.3 Functional Priorities....117
4.2.2.4 Spaces and Characteristics....117
4.2.2.5 Interior Design....123
4.2.2.6 Signs....124
4.2.2.7 Windows....127
4.2.2.8 Doors and Hardware....127
4.2.2.9 Natural Lighting....128
4.2.2.10 Building Thermal Insulation and Vapor Retarders....128
4.2.2.11 Handicapped Design....128
4.2.2.12 Elevators and Stairs....128
4.2.2.13 Ceilings....128
4.2.2.14 Walls....128
4.2.2.15 Acoustical Control....129
4.2.3 Landscape Architecture....129
4.3.1 Site Analysis and Development Concept....129
4.2.3.2 Planting....129
4.2.3.3 Landscape Lighting....130
4.2.3.4 Exterior Signs....130
4.2.3.5 Utilities....130
4.2.3.6 Site Furnishings....130
4.2.3.7 Equipment Screens and Walls....130

Page

4.2.3.8 Selection of Plant Material.....130
4.2.4 Civil.....130
4.2.4.1 Roads, Parking and Walkways.....131
4.2.4.2 Handicapped Access.....131
4.2.4.3 Loading Dock Ramp Protection.....131
4.2.5 Structural.....131
4.2.5.1 Clearspan Requirements.....131
4.2.5.2 Weight Handling Equipment.....132
4.2.5.3 Floors.....132
4.2.5.4 Roof Loads.....132
4.2.6 Heating, Ventilating and Air Conditioning.....132
4.2.6.1 Design Conditions.....132
4.2.6.2 Ventilation.....132
4.2.6.3 Zoning, System Selection and Part Load Performance.132
4.2.6.4 Controls.....133
4.2.7 Plumbing.....133
4.2.7.1 Compressed Air.....133
4.2.7.2 Electric Water Coolers.....133
4.2.7.3 Waste Systems.....133
4.2.7.4 Emergency Eyewash/Shower.....133
4.2.8 Electrical.....133
4.2.8.1 Telecommunications.....134
4.2.8.2 Lighting.....134
4.2.8.3 Lightning Protection.....134
4.2.8.4 Facility Low Voltage Power.....134
4.2.8.5 Intrusion Detection System (IDS).....134
4.2.9 Fire Protection.....135
4.2.10 Safety.....135
4.2.11 Security.....135
4.3 Collateral Equipment.....135
4.3.1 Collateral Equipment List.....136
4.3.2 Furniture/Equipment Footprint.....136
4.3.3 Training Aids.....136
4.3.3.1 Special Training Device Requirements.....136
4.3.3.2 Audiovisual Requirements.....136
4.4 Environmental Requirements.....137

Section 5 AVIATION SURVIVAL TRAINING CENTER FACILITIES - WATER SURVIVAL
5.1 Functional Requirements.....148
5.2 Facility Design.....148
5.2.1 Site Planning.....148
5.2.2 Architectural.....148
5.2.2.1 Adjacency.....149
5.2.2.2 Circulation.....149
5.2.2.3 Functional Priorities.....149
5.2.2.4 Spaces and Characteristics.....149
5.2.2.5 Interior Design.....152
5.2.2.6 Signs and Markings.....154
5.2.2.7 Windows and Natural Lighting.....154
5.2.2.8 Doors and Hardware.....154

Page
5.2.2.9 Thermal Insulation and Vapor Retarders.....155
5.2.2.10 Handicapped Design.....155
5.2.2.11 Stairs, Ladders, and Rails.....155
5.2.2.12 Elevators.....155
5.2.2.13 Walls.....155
5.2.2.14 Acoustical Control.....155
5.2.3 Landscape Architecture.....157
5.2.4 Civil.....157
5.2.4.1 Roads, Parking and Walkways.....157
5.2.4.2 Handicapped Access.....159
5.2.5 Structural.....159
5.2.5.1 Floors.....159
5.2.6 Heating, Ventilating and Air Conditioning.....159
5.2.6.1 Design Conditions.....159
5.2.6.2 Ventilation.....159
5.2.6.3 Air Distribution System.....160
5.2.6.4 Zoning.....160
5.2.6.5 Specialties.....160
5.2.6.6 HVAC Controls.....160
5.2.6.7 Noise.....161
5.2.7 Plumbing.....161
5.2.7.1 Pool Water Treatment, Recirculation, and Filtration.....161
5.2.7.2 Vacuum System.....163
5.2.7.3 Compressed Air Systems.....163
5.2.7.4 Specialties.....163
5.2.8 Electrical.....164
5.2.8.1 Telecommunications.....164
5.2.8.2 Lighting.....164
5.2.8.3 Lightning Protection.....165
5.2.8.4 Facility Low Voltage Power.....165
5.2.8.5 Intrusion Detection System (IDS).....165
5.2.9 Fire Protection.....165
5.2.10 Safety.....166
5.3 Environmental Requirements.....166

APPENDICES

Appendix A Water Survival Pool Trainer.....172
Appendix B Typical Aviation Survival Training Devices.....173

FACILITY PLATES

| Category Code | Title | Sheet No. | Page |
|---|---|---|---|
| 171-35 | F18 WTT First Floor Plan..... | A1 | 41 |
| 171-35 | F18 WTT Second Floor Plan..... | A2 | 42 |
| 171-35 | F18 WTT High Bay Section..... | A3 | 43 |
| 171-35 | F18 WTT Computer Room CE Area..... | A4 | 46 |
| 171-35 | F18 WTT Computer Room TIG/CIG..... | A5 | 47 |

| | | Page |
|---|---|---|
| 171-35 | F18 WTT Computer Room EMS/CIG.....A6 | 48 |
| 171-35 | F18 OFT Floor Plan.....A7 | 53 |
| 171-35 | F18 PTT Floor Plan & Equipment Summary.....A8 | 56 |
| 171-20 | F/A-18 Main Landing Gear Trainer-Isometric....B1 | 86 |
| 171-20 | F/A-18 Secondary Flight Controls Trainer-Isometric.....B2 | 88 |
| 171-20 | F/A-18 Environmental Control System Trainer-Isometric.....B3 | 92 |
| 171-20 | F/A-18 Primary Flight Controls Trainer-Isometric.....B4 | 95 |
| 171-20 | F/A-18 Fuel System Sim Aircraft Maintenance Trainer-Isometric.....B5 | 98 |
| 171-20 | F/A-18 Fuel System Sim Aircraft Maintenance Trainer-Floor Plan.....B6 | 99 |
| 171-20 | F/A-18 Avionics System-Isometric.....B7 | 102 |
| 171-20 | F/A-18 Avionics System-Floor Plan.....B8 | 103 |
| 171-20 | F/A-18 Flt Cntrl Electronics Sys Simulated Aircraft Maint Trainer-Isometric.....B9 | 106 |
| 171-20 | F/A-18 Flt Cntrl Electronics Sys Simulated Aircraft Maint Trainer-Floor Plan.....B1O | 107 |
| 171-20 | F/A-18 Armament System Simulated Aircraft Maint Trainer-Isometric.....B11 | 110 |
| 171-20 | F/A-18 Armament System Simulated Aircraft Maint Trainer-Floor Plan.....B12 | 111 |
| 171-20 | F/A-18 Hydraulic System Trainer-Room Floor Plan.....B13 | 114 |
| 171-20 | F/A-18 Hydraulic System Trainer-Isometric.....B14 | 115 |
| 171-20 | Typical Floor Plan-Small ASTC.....C1 | 138 |
| 171-20 | Typical Floor Plan-Large ASTC.....C2 | 139 |
| 171-20 | Floor Plan-Decompression Chamber.....C3 | 142 |
| 171-20 | Isometric/Cutaway View-Decompression Chamber..C4 | 143 |
| 171-20 | Top and Side View-Ejection Seat Trainer.....C5 | 146 |
| 171-20 | Isometric-Ejection Seat Trainer.....C6 | 147 |
| 171-20 | Typical Piping Diagram.....D1 | 168 |
| 171-20 | Flipper and Goggle Rack.....D2 | 169 |
| 171-20 | Underwater Accessories.....D3 | 170 |
| 171-20 | Typical Water Survival Training Facility.....D4 | 171 |


FIGURES


| | | |
|---|---|---|
| Figure 1 | Simulator Facility Bubble Diagram | 7 |
| Figure 2 | Maintenance Training Bubble Diagram | 59 |
| Figure 3 | Aviation Survival Training Center Bubble Diagram | 118 |
| Figure 4 | Aviation Survival Training Center Water Survival Bubble Diagram | 156 |
| Figure 5 | Indoor Pool Energy Loss | 158 |

TABLES


| Number | Title | Page |
|---|---|---|
| Table 2.1 | Recommended Finishes: Simulator Facilities | 20 |
| 2.2 | F/A-18 (WTT) Trainer Facility Data | 38 |
| 2.3 | F/A-18 (WTT) Trainer Equipment Summary-Computer Room | 44 |
| 2.4 | F/A-18 (OFT) Trainer Facility Data | 49 |
| 2.5 | F/A-18 (OFT) Trainer Equipment Summary | 51 |
| 2.6 | F/A-18 (PTT) Trainer Facility Data | 54 |
| 3.1 | Recommended Finishes: Aviation Maintenance Training Facilities | 69 |
| 3.2 | F/A-18 Trainer Facility Data Landing Gear and Arresting Hook | 84 |
| 3.3 | F/A-18 Trainer Facility Data Secondary Flight Control Trainer | 87 |
| 3.4 | F/A-18 Trainer Facility Data Environmental Control System Trainer | 90 |
| 3.5 | F/A-18 Trainer Facility Data Primary Flight Controls Trainer | 93 |
| 3.6 | F/A-18 Trainer Facility Data Fuel System Trainer | 96 |
| 3.7 | F/A-18 Trainer Facility Data Avionics System (SAMT) Trainer | 100 |
| 3.8 | F/A-18 Trainer Facility Data Flight Control Electronics System (SAMT) Trainer | 104 |
| 3.9 | F/A-18 Trainer Facility Data Armament System (SAMT) Trainer | 108 |
| 3.10 | F/A-18 Trainer Facility Data Hydraulic System | 112 |
| 4.1 | Recommended Finishes-Physiological Training Facilities | 125 |
| 4.2 | Trainer Facilities Data-Rapid Decompression Chamber - Device 9AIC | 140 |
| 4.3 | Trainer Facilities Data-Universal Ejection Seat Trainer - Device 9E6 | 144 |
| 5.1 | Recommended Finishes - Water Survival Training Facilities | 153 |
| 5.2 | Water Survival Facilities - Hazardous Materials Data | 167 |

REFERENCES.....185

GLOSSARY.....189

# Section 1: INTRODUCTION

1.1 Scope. This handbook is intended to assist in design of the highest quality aviation training facilities at reasonable cost and in compliance with DoD criteria. It covers the design requirements for aircraft operational and maintenance training facilities. Special attention is focused on accommodating a dynamic training environment which is on the leading edge of current technology. Terse statements from other criteria may appear in the text for prompting the user on unique issues; however, references are generally made to appropriate criteria in order to avoid redundancy and assure the use of the latest criteria.

1.2 Distribution of Responsibilities. Shore activities and A/E designers using this handbook are advised that there are several participants in the development of aviation training facility design. First, there is the local command and resource sponsor that identify the need for a new, enlarged, or upgraded facility and initiate the project development process. Second, there is the Naval Air Warfare Center, Training Systems Division, which is responsible for the procurement of training systems for the Navy and Marine Corps as directed by the Naval Air Systems Command. Third, there is the Naval Facilities Engineering Command (NAVFAC), which is responsible for management of design and construction of all Navy shore facilities.

1.3 Background

1.3.1 Simulator Facilities. The flight simulator was introduced during World War II to train aviators quickly and safely in the fundamentals of flight. Today's simulators perform this function and, when combined with visual systems, can train pilots in landing at sea, air combat maneuvering and weapons delivery. Technology has produced stationary trainers capable of simulating the motion of high performance jet aircraft through seat assembly "g-cuing" dynamics with hydraulic and pneumatic-driven components and realistic cathode ray tube (CRT) projection systems mounted directly to the canopy. Adoption of these "stationary" trainers will undoubtedly reduce the mechanical and structural requirements typically required by trainers on motion pedestals with hydraulic needs and dynamic structural loads. Helicopters and certain other aircraft will continue to use motion systems. Demand for simulation devices will continue to grow as economic merits are fully realized and as both reservists and those on active duty are required to maintain a high state of readiness. Operational Flight Trainers (OFTs) with motion and visual capabilities are being used for "flight hour substitution."

Innovations in visual display technology such as miniature visual display headgear, cockpit controls, and sophisticated dual screen touch screen CRTs may eventually enable commands to conduct intermediate level training exclusive of motion systems and domes. Single and double domes can be as large as 40 feet in diameter. Future trainers may downsize domes; however, visual equipment placed outside the smaller domes could still justify the same spatial requirements in the high bay area. Advancements which can accurately simulate acceleration vectors, emerging head and eye-tracked display systems, and wider fields of view are major developments.

Future training systems will operate in an integrated mode. Facilities must then accommodate computer areas in close proximity to a

central computer managing the training environment. Integrating training systems to perform combined operations, such as flying a mission with attack aircraft and fighter escort, could require the use of satellite communications between bases. Antisubmarine warfare (ASW) helicopter simulators can now be linked in pairs for combined training with each other and with the antisubmarine sensor operator and acoustic trainers. The P-3C OFT has the capability of coupling with a P-3C tactical operational readiness trainer which allows accomplishment of certain crew coordination qualification exercises. Previously, these "quals" had to be done in the aircraft. The use of simulators for mission preparation will drive some simulators to become portable for squadrons to carry on deployment yet retain sufficient capability to simulate the mission environment.

1.3.2 Maintenance Training Facilities. Maintenance trainers were developed to instruct students in the methods and procedures required to maintain aircraft systems. The trainers allow the students to see, and in some cases, gain hands on experience with the equipment prior to working on actual gear without producing wear on the actual equipment.

1.3.3 Aviation Survival Training Center (ASTC) Facilities. Aviation Survival Training enhances operational readiness through preservation of human life and conservation of aviation assets by way of the Naval Aviation Survival Training Program (NAPTP), Naval Aviation Water Survival Training Program (NAWSTP), Fleet Air Introduction/Liaison of Survival Aircrew Flight Equipment (FAILSAFE) Program and the Aeromedical Safety Officer (AMSO) Program. Training will familiarize all prospective and designated aeronautical personnel, selected passengers, project specialists, and any other authorized personnel with the aeromedical aspects of flight and prepare them to properly employ aviation life support systems (ALSS) and survival procedures.

The students are allowed to see demonstrations and gain hands-on experience prior to using actual gear.

1.4 Planning Criteria. General planning criteria for training facilities is in NAVFAC P-80, Facility Planning Criteria for Navy and Marine Corps Shore Installations, under Category Code 171 in Chapter 2, Section 1.

1.5 Project Engineering (PE) Phase. During the PE phase, a "Total Team Pre-Design Process" session at the host activity should be used to establish requirements and to familiarize all present with the roles of each team member. Include at the session a project team consisting of the using activity (or customer team which includes public works specialists and the System Safety Working Group (SSWG), Resident Officer in Charge of Construction (ROICC), major claimant and end user), the Engineering Field Division (EFD) engineer- or architect-in-charge, the training equipment manufacturer, the facility design firm (if designed by A/E) and the equipment procuring agency. In addition, for simulators, include the NAVAIR Program Manager Assistant for Training (PMA205) and Shore Facilities Office (Code 09Y), Naval Warfare Center Training Systems Division (NAWCTSD) Trainer Facilities and Electromagnetic Effects (Code 412), and the Contracting Officer Technical Representative (COTR). Include the Naval Air Maintenance Training Group Detachment (NAMTRAGRUDET) for aviation maintenance training facilities. Marine Corps projects must include the Fleet Introduction Team

(FIT) and the S4, which is the Marine counterpart to the Navy Public Works Office. ASTC projects must include the Office of the Assistant Secretary of Defense (Health Affairs) Defense Medical Facilities Office [OASD(HA)DMFO]; Bureau of Medicine and Surgery (BUMED) (Code 43); NAVFAC (Code 09MD); Naval Aerospace and Operational Medical Institute (NAMI); NAWCTSD (Code 412) and Naval Healthcare Support Office (HSO) (Code 44).

For new simulators, the manufacturer's Trainer Facility Report (TFR) is required for simulators as a precedent to ready-for-design certification. Consult NAWCTSD (Code 412) for relocations of existing simulators. The training equipment may continue to undergo development as the building design progresses; therefore, methods of communication between the facility designer and manufacturer via the EFD must be established. NAVAIR engineering personnel are available during design and construction to provide specialized expertise to NAVFAC and can arrange for manufacturers' representatives to attend design reviews. Review sessions attended by the manufacturer must be approved in advance by NAVAIR Codes 09Y and PMA205 and NAWCTSD Code 412. Manufacturer and facility designer schedules must be closely monitored. This will allow design personnel to schedule design submissions to avoid potential design change orders. The type of developmental modifications which traditionally have the greatest impact on the facility design should be identified by the manufacturer. Device related issues account for the majority of design changes. Repositioning of reaction bases and increasing electrical power, HVAC, and hydraulics are often required.

1.6 Construction Phasing. Phasing can severely impact the cost of a project. Aviation Training Facility projects are dynamic in that development of training devices often parallels the building design development. Evaluate construction phasing closely to minimize unnecessary constraints on the construction contractor. The ROICC must be involved early on in the project to advise the project team on any proposed phasing plan. Wall openings required for large training equipment installation must be included in phasing plans to ensure that access is available at the time of delivery and that subsequent closure or panel replacement can be accomplished by the construction contractor. Additions and alterations to existing facilities require special attention since the work may cause unacceptable out-of-service break-in-training conditions for existing devices. For new construction, include time after the building is "punch list ready" for technical training equipment and collateral equipment installation to establish the ready for training date.

1.7 Site Verification. The requirement for aviation training facilities to be located in close proximity to core activity and flight lines must be balanced with the need for a relatively noise free environment for classroom instruction and minimal vibration which can affect simulation equipment. Comply with OPNAV Instruction 11010.36A, Air Installation Compatible Use Zones (AICUZ) Program. Accordingly, aviation training facilities should be classified as Educational Services and are not permitted in noise zones with Day-Night Average Sound Level (DNL) of 75 or above. Refer also to P-970, Planning in the Noise Environment. Training equipment is designed to tolerate a certain strength of electromagnetic fields; however, exceeding the design limits could result in malfunctioning equipment and physical damage. Review siting to confirm if any of the following will impact the project:

a) other construction
b) future expansion
c) archeological
d) wetlands
e) coastal zone management
f) environmental permits
g) fire protection water pressure
h) flood plain
i) security clear zone
j) former hazardous waste spills (contaminated soils)
k) storm water management
l) historic preservation
m) base fire departments
n) separation of structures per MIL-HDBK-1008C, Fire Protection for Facilities Engineering, Design and Construction.
o) significant biological features (vegetation, wildlife, etc.)
p) micro-climatic conditions
q) other land-use factors as noted in Master Plan
r) soil stiffness impact on vibration control
s) high-intensity noise
t) TEMPEST requirements
u) Base Exterior Architecture Plan (BEAP)
v) Electromagnetic Interference (EMI) Survey
w) radiation hazards

1.8 Operation and Maintenance Support Information. Operation and Maintenance Support Information (OMSI) development is mandatory on aviation trainer facilities. The designer will normally prepare the OMSI package using material provided by the construction contractor.

1.9 Cancellation. This handbook, MIL-HDBK-1027/4A, dated 9 March 1998, cancels and supersedes MIL-HDBK-1027/4, dated 31 December 1993.

## Section 2: SIMULATOR FACILITIES

2.1 Functional Requirements. Aviation simulators range from Part Task Trainers (PTT) to Weapons Tactics Trainers (WTT) and vary in size from single room trainers to integrated complexes with several simulators performing the same mission.

a) Part Task Trainers, Aircrew Systems Trainers and Cockpit Procedures Trainers are primarily used to instruct the pilots in the layout of the cockpit and Naval Aviation Training and Operating Procedures Standardization (NATOPS). This could be a mockup of the cockpit or an operators console. Normally the supporting computers for the trainers are not separated from the mockup. A trainer containing a mockup of the cockpit may include hydraulic systems to simulate the control stick resistance and requires approximately 120 additional square feet for the pump.

b) Tactics Trainers normally simulate the non-piloting type positions of the aircraft such as the Radar Intercept Officer (RIO), the Anti-Submarine Warfare (ASW) aspects, and the Naval Flight Officer (NFO) of EA-6B aircraft. Many times these trainers are coupled to an operational flight trainer to integrate the pilots with the crewmen for missions.

c) Operational Flight Trainers (OFTs) can either be static or mounted upon a six degree of freedom (DOF) motion system. Visual systems range from cathode ray tube (CRT) type to the 40 feet diameter dome with projection systems. The procuring activity should include 60 Hz to 400 Hz conversion equipment in the procurement contract for any equipment requiring 400 Hz power.

d) Weapons System Trainer (WST) is basically a combination of the OFT and the tactics trainer. Each portion of the WST is normally capable of operation in either the stand-alone or integrated mode.

e) Weapons Tactics Trainer (WTT) for the F14 and F18 high performance fighters is comparable to having two OFT's integrated into a single trainer. AH-1 and AH-64, on the other hand, use one cockpit for the pilot to fly the aircraft and the second cockpit for the gunner to control the aircraft weapons. The key items that make up a WTT are the visual systems for environment and targets and the ability to integrate as noted above.

The prime document in the facility development is the simulator manufacturer's TFR. The TFR typically outlines facility requirements to accommodate each trainer device and is normally not available until after the equipment contract has been awarded. Coordinate closely with the device manufacturer if the TFR is not available. This handbook contains "Trainer Facility Data" sheets which reflect the pertinent requirements in standard format for the designer.

2.1.1 Special Program Considerations. Device support, physical security, future modification to the equipment, pollution avoidance from the hydraulic fluid spills, adequate computer room air conditioning and clean power are prime considerations for training facilities.

2.1.2 Future Growth. Ascertain any future upgrades and growth patterns which may affect design flexibility for the high bay and computer rooms.

2.2 Facility Design. Locate simulator devices remote from sources of vibration within the building. Identify existing sources of vibration in buildings which are retrofitted for device installation and provide measures to control vibration. In the future, requirements for contractor office space will probably increase with more private contracting for training services.

2.2.1 Site Planning. Base the siting on a thorough investigation and analysis of the existing physical conditions of the land and the functional requirements of the project. Place structure(s) and paved areas to minimize disruption to any existing utilities and/or future expansion. See mechanical sections for requirements on utility entry points into the mechanical room. Accommodate future expansion plans.

The site must provide adequate truck turnaround and maneuvering space for the installation and removal of training equipment. The exterior access drives required for the installation and removal of equipment from the facility will be used for that purpose very infrequently. When not being used for equipment installation and removal, the maneuvering space can be used for other purposes such as extra parking. Consult the using activity and base for needs. Designated pilot and instructor parking spaces are recommended convenient to the building entry. Reevaluate site locations near sources of vibration due to extreme simulator sensitivity where laser projector systems are incorporated. Avoid simulator locations adjacent to heavy equipment vibration sources or truck traffic.

2.2.2 Architectural. Place emphasis on simple, straightforward functional solutions to both interior and exterior design and detailing. Careful interior planning and design are necessary to ensure the most effective training environment. Space planning should result in a Furniture/Equipment Footprint with life safety considerations complying with NFPA 101, Life Safety Code.

Massing for simulator facilities is usually governed by the high bay which encourages two levels of adjoining ancillary support space. If handled properly, this can eliminate multiple roof levels and minimize roof area and overall cost and trainees can usually access dome and motion based cockpits directly from second floor level. Maintain adequate floor to structure clearances. Minimizing heights in the high bay area can severely inhibit flexibility for future trainer modifications. Seismic design may require limits on the height of structures and special design configurations. Follow guidelines given in MIL-HDBK-1001/1, Basic Architectural Requirements and Design Considerations.

2.2.2.1 Adjacency. Some spaces require adjacency for the efficient and correct operation of the equipment installed therein while others provide adjacency for the convenience of the users of the facility. See Figure 1. For instance, a training device with hydraulic systems requires a pump room adjacent to the trainer room, whereas Briefing/Debriefing rooms are located adjacent to the respective trainer for convenience of instructor and trainee.

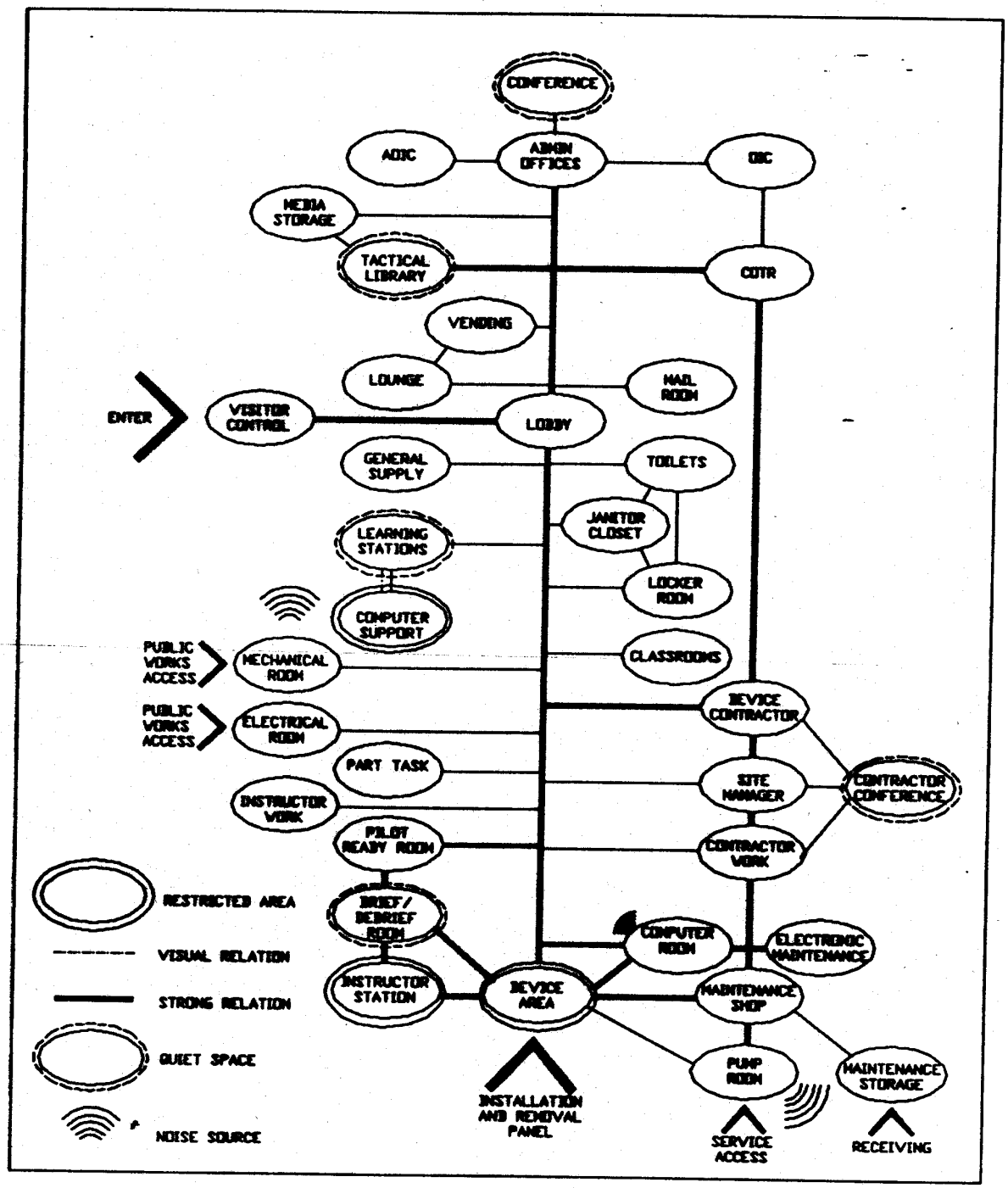


Figure 1
Simulator Facility Bubble Diagram

A primary adjacency requirement is that the device area must be adjacent to the mechanical pump room, the computer room and the instructor station/console space. The maximum distance from six degree of freedom (DOF) devices to the hydraulic room is 150 feet. Place high bay areas of the same or nearly equal height adjacent to each other and combine into one level for simplification of roofing and structural systems and resultant cost savings.

2.2.2.2 Circulation. Circulation patterns in simulator facilities and intensity vary among aviation training facility types. Varying numbers of administrative personnel, contract personnel, trainees, and instructors contribute to the pedestrian traffic load. Arrange spaces to provide the most direct access. Group classrooms utilizing oversized equipment to minimize need for lengthy extra wide access corridors to the exterior. Widen corridors used for display.

Circulation intensities are similar to an administrative facility except that in/out traffic for instructors and pilots is brisk. Simulator facilities must also support contractor personnel, Government administrative support personnel, and visitor traffic. Accommodate pilot trainees' ready access from the building entry to the training stations and Ready Room.

A visitor control point is required for all building entrants for issue of badges and signing in and out. Classified storage areas and classified control can complicate the pedestrian flow and fire exiting patterns. Card reader and key pad access control may be required by the user and the base security officer in conjunction with Naval Criminal Investigative Service Command (NCIS).

2.2.2.3 Functional Priorities. The most important sections of the facility are those that are directly required to perform the training mission. Other portions of the facility are secondary. Space groupings in order of importance are:

a) Training rooms (e.g., classrooms, brief/debrief rooms, trainer rooms, etc.) required to perform the training.

b) Direct support spaces, such as computer rooms, storage rooms for classroom materials, mechanical equipment rooms, instructors' offices, etc., without which, the training would be degraded or impossible to perform.

c) Indirect support spaces, such as toilets, lounges and administrative offices, without which training can be accomplished, but at a cost in the efficiency of the training organization.

2.2.2.4 Spaces and Characteristics

Administrative Offices. Includes secretarial functions, supervisors, and/or security personnel. An open office partition plan in administrative areas should be used for economy of space and open intra-office communications. An acceptable path of travel must be established per NFPA 101 for fire exiting. Provide sound absorbing materials as required in office areas. Provide access flooring where computer networks are required. Refer to MIL-HDBK-1034, Administrative Facilities, for additional data.

Assistant Officer in Charge (AOIC). Reports directly to the Officer in Charge. This space may not be required within all facilities since this person may already have adequate office space elsewhere.

Brief/Debrief Room. The debriefing room is used to instruct the trainees in the training mission prior to the simulated flight and to debrief the trainee on performance and improvement. This instruction incorporates the use of charts and replay of the mission from the simulator computer memory or tapes.

Accommodate two to eight people and a debriefing computer console where required by the TFR. Access flooring is required for consoles. A CRT screen, keyboard, and disk or tape drive unit cabinet are utilized. Provide chart pin-up wall space and a marker board where required. One room at 100 square feet is required for each WTT or OFT. Maintain a maximum noise level of 35 Dba complying with DM 1.03, Architectural Acoustics.

Classroom Equipment Storage. Provide a lockable closet accessible from the classroom. Centralize other storage shared by other classrooms on the same floor.

Computer Room. Generally contains the visual image generation equipment, simulation computers, computer memory and peripherals, and freestanding cooling equipment. This space is subject to modifications whenever the training device is upgraded. Avoid other functions in computer rooms which require unnecessary intrusions increase dust and air conditioning loads.

A typical OFT requires computer equipment area, work space and access space plus additional space for computer room air conditioning equipment. The required access floor is typically 18 inches in height and, if possible, depress the concrete subfloor 18 inches so the top of the access floor is the same height as the facility finish floor adjacent to the room. The access floor space will usually serve as a supply air plenum.

Conference Room. Address all types of conference space utilization to ascertain needs. Accommodate flexibility in occupancy counts and table arrangements. Consider providing the capability of subdividing the room(s) with accordion folding partitions having a Sound Transmission Class (STC) rating not less than 40 and provide maximum sound absorption in finishes. Provide porcelain "marker board," bulletin board, and pull down projection screen. Provide two means of egress with door swings in the direction of exit travel for rooms exceeding an occupancy of 50 people.

Contracting Officer's Technical Representative (COTR) Office. The COTR monitors contractor performance and serves as the primary point of contact between the contractor and the Government. The COTR requires administrative office space in close proximity but separate from the contractor. Provide lockable private office for Government representative(s). COTR's require efficient access to a variety of spaces in the facility including the high bay, contractor offices and library.

Contractor Conference. Ready access to a conference room large enough for the contractor to meet in private with all personnel is required.

Contractor Work Room. The Contractor Operation and Maintenance of Simulators (COMS) personnel will require their own work areas to perform their administrative functions and work. Space requirements will vary with contract requirements.

Corridors. Set the width of corridors considering trainee occupancy loads and exiting and heavy circulation points, such as stairways and vending areas. Base minimum width dimensions on building occupancy, complying with NFPA 101 and minimum width of equipment maneuvering space, whichever is greater. Where lockers are not provided, provide coat and foul weather gear hanging areas near entrance in recessed alcoves or in student lounges.

Darkroom. This facility may be required where instructional support work is done. A 12 feet by 16 feet space is usually adequate.

Dedicated Classroom. One or more dedicated classrooms may be required for classified teaching material. Provide adequate STC ratings for walls in accordance with levels of security.

Device Area or Trainee Room. Often referred to as the "high bay," this space contains the simulator device. Operational in-flight trainers usually incorporate some form of cockpit simulation with various combinations of motion/non-motion and dome/non-dome visual projection systems. Visual projection systems may require special maintenance access provisions in the manufacturer's TFR such as wrap around catwalks or mobile scaffolds. Organizational ("O") level maintenance is performed at the device.

Allow stowage space for moveable service platforms. Height of the high bay area should be set generously with regard to the highest excursion limit anticipated in proposed training device(s) and clearances for overhead crane during installation/removal and operation. Current worst case space requirements for a single trainer are for an OFT non-motion simulator with a 40 feet diameter dome utilizing externally mounted visual projectors. Keep all facility elements and fixtures outside the excursion limits of motion simulators.

Provide trenches instead of access floor systems and route from the device to the hydraulic pump room and mechanical and computer rooms. Provide trenches for pneumatic and hydraulic tubing and air ducts. Carefully coordinate trench layouts by device manufacturer to avoid conflicts with catwalk platform bases, trainer supports, motion system pads, and other obstructions.

Device Contractor Office. The office is required for the administrative work associated with fulfilling the contract for the operation and maintenance of the training equipment. It should be located near the maintenance room and the COTR office. This room may be combined with or be identical to the Site Manager's Office. Provide lockable office space. More than one contractor may be present on site. Provide work space for contract instructors if required by the COTR.

Electrical Room. This space contains the facility main distribution panel, subdistribution panels and step down transformers required for the operation of the facility. Frequency converter and telephone panelboard

may be included. Do not combine the Electrical Room with the Mechanical Room.

Electronic Maintenance and Repair. Minor repair of the trainer components is undertaken here by the device contractor. Provide workbenches for minor repair. Include these on the Collateral Equipment List. Consider peg mounting boards on the wall for hanging cables. The standard Navy electronic workbench, type NEB-2 with PS-1A 24VDC electric-converter is recommended for electronic maintenance shops. Verify if 400 Hz and other power characteristics are required. Workbenches may be ordered through the Aviation Supply Office, Philadelphia, PA. Typical installation consists of three 24-inch wide modules with back panels for an assembled size of 72 inches wide by 33-7/8 inches deep by 60-1/4 inches high. Suggested components follow:

| | | |
|---|---|---|
| 3 ea- | FSN: 1N6625-851-2158 | Back Panel and Shelf Assembly |
| 3 ea- | FSN: 1N6110-839-8026 | Electrical Distribution Box |
| 2 ea- | FSN: 1N6625-851-2157 | Base Assembly |
| 2 ea- | FSN: 1N6625-851-2156 | Cabinet Assembly |
| 1 ea- | FSN: 1N6625-851-2159 | Table Assembly |
| 1 ea- | FSN: 1HM613000-4108488TM | PS-1A electric-converter |

General Academic Classroom. Seating arrangement is the most important factor in determining the size and shape of a classroom. Accommodate any special requirements for static and operative displays and team teaching, such as small, medium, and/or large class seating arrangement flexibility within the same classroom boundaries. The length required for the front marker board also affects the shape and orientation of the room. Refer to Timesaver Standards for Building Types, 2nd Edition, (McGraw-Hill Book Company) for detailed data on seating arrangements. Optimize the classroom sizes and shapes for flexibility and enhancement of instruction. Avoid "pie shape" and other configurations which limit alternate seating arrangements. Determine seating types and audiovisual characteristics before finalizing configuration. Fixed seating tiers can decrease flexibility. Consider fixed seating and tiers only in facilities with a minimum of three classrooms. Use of maps and fold out materials by trainees may require seating at tables.

Aviation training facilities typically use training devices requiring mechanical systems support. Consequently, classrooms are often exposed to a variety of support equipment noises in addition to HVAC unit noise which can distract from instruction. Provide sound baffles, absorbent materials at noise sources, and locate mechanical units remote from classrooms. Avoid sound masking in classrooms. Acoustic design level for classrooms should be RC-30 with 50 STC (minimum) walls. Provide sound absorbing materials in lecture rooms to limit reverberation time to 1.0 second, and provide sound-reflecting surfaces on the forward ceiling and wall surfaces for sound reinforcement. Since classrooms are repetitive spaces, intense effort is required to assure quality in each duplicated space. Consider the following major factors for design of classrooms:

1) Seating types and arrangements and writing surfaces

2) Space and furnishings for the lecturer

3) The use of wall space, including teaching aids and windows

4) Projection and TV facilities

5) Coat racks, storage and other conveniences

6) Acoustics and lighting

7) Heating, ventilating and air conditioning

8) Aesthetic considerations

Provide acoustically rated accordion folding panel partitions with integral door where flexibility is desirable for subdividing classrooms. Extend details above finished ceiling to assure integrity of specified sound transmission class (STC) in the interstitial space.

TV monitors and special projection systems in addition to traditional marker boards or porcelain boards may be used. Refer to paragraph entitled "Audiovisual Requirements." Porcelain marker boards are preferred over "chalkboards." Include a display rail with clip fasteners. Wall perimeter tack strips should be provided for graphic display, such as maps and charts. Non-obtrusive observation sidelights are required at classroom entries. Provide lockable storage space for items such as student guides, training aids, small portable mockups and trainers. Limit storage areas for audiovisual equipment to those items dedicated to each classroom.

Provide small portable platform units in lieu of permanent raised platforms (plus or minus, 8 inches high) for classroom lectern areas utilizing demonstration techniques and in rooms with over 5 seating rows. Permanent platforms can severely limit future rearrangements in seating and subdivisions. Allow a generous width for the instructor to transverse the platform for the full length of the marker board. Centralize other storage on the same floor.

General Supply Storeroom. Provide double doors in lieu of overhead door to exterior loading area for better control of air infiltration. Verify if dutch door or issue counter is required by the user.

Hydraulic Repair Shop. This is a work station for the contract personnel. Provide shop air and on-site collection of hydraulic fluid.

In-Service Engineering Office (ISEO). This function is administrative in nature and is required only at selected facilities and maintains the configuration of the hardware and software of the training equipment with each aircraft type. An ISEO is ordinarily dedicated to one major weapon system and is located at an installation that is a primary training site for that weapon system. A main frame computer room with access floor system and secure storage such as classified safes may be required. Numerous hardware and software publications are used. Classified information must be stored in accordance with OPNAVINST 5510.1H, Department of the Navy Information and Personnel Security Program Regulation and MIL-HDBK-1013/1, Design Guidelines for Physical Security of Fixed Land-Based Facilities.

Instructor Station/Console. The Instructor Station/Console controls the simulation. Depending upon the functional requirements of the training equipment, the instructor station or console is either a free standing unit or is incorporated into the trainee station to allow the instructor a direct view of the trainee. Visual contact with the device is often desirable and can provide relief to an otherwise cavernous space, as well as provision for monitoring pilot access in and out of the device. The console provides the instructor with the capability of monitoring trainee activities and controlling the training session. Separate space for this station is not always required for flight simulators.

Provide an access floor system. This may also be an integral part of the simulator device contained on-board or in other cases, both separated and integral stations could be required. Consoles for double dome trainers may be adjacent to each other, but a folding curtain must be incorporated for temporary separation. Wall mountings for charts may be required.

Instructor Work Room. Separate dedicated instructor work space from trainee gathering areas and trainee pedestrian traffic. Locate near or contiguous with the Library/Learning Center for access to resource materials.

Provide large, clear areas for instructor work space to permit flexibility in reapportionment of spaces. This area should be designed around a modular scheme for the greatest possible flexibility in arrangement. When individual offices are required within general areas, they should be enclosed by lightweight, movable partitions. Systems or modular furniture provides privacy and acoustical control in an open environment and allows great flexibility for changing instructor work space. PC work stations may be used here on a network. Design power, telephone, and data distribution wiring systems in this area to allow for frequent changes.

Janitor Closet. Provide adjustable shelving and storage space for cleaning equipment and supplies, mop rack, and a deep sink or mop receptor on each floor.

Learning Stations. The learning stations are primarily computer aided instruction utilizing student carrels. The instruction proceeds at the students' own pace and ability to learn the material.

Learning Station Computer Support. Most computer aided instruction systems now in use require a central processor which is usually located adjacent to the learning stations area. Direct and dedicated support of learning stations is provided. Provide access floor where required. Future technology advancements may replace the central processor with a desktop computer unit located in the learning stations area. Interactive courseware (ICW) may be used.

Up to eight classified file safes may be used. Provide security measures as required by the user and the base security officer in conjunction with NCIS.

Library/Learning Center. This space provides information and resources. Larger centers require control of equipment and materials with a service counter and work space which will provide orderly issue and receipt

as well as inventory control and repair. Audiovisual or other equipment repair may be required.

In addition to books, the learning center may contain records, tapes, closed circuit TV facilities, film, cameras, Video Cassette Recorders (VCRs) and projection equipment. Larger centers may need separate stack and reading areas. Provide storage for Navy publications and rate-training manuals. Accommodate a classified file safe where required by the user. Acoustic controlling materials are necessary to ensure a quiet environment.

Provide for computerized Electronic Information Delivery System (EIDS) and carrels if required by the user. Carrels where needed must be sized to accommodate the EIDS. The EIDS may require a separate room for the host computer depending on the system and may be restricted to authorized personnel only.

Lobby. Locate for direct visual supervision of central control. Provide wall area for a bulletin board and building directory. Accommodate any memorabilia provided by the user. Include a recessed scuff area at the entry point for control of debris from foot traffic. A vestibule is recommended for energy conservation.

Locker Room. Provide permanent built-in curb mounted lockers except where future flexibility is required. Provide adequate lockers and clothes hooks for trainee occupancy load and adequate garment changing area with wall mounted number 8 finish stainless steel mirror. Minimize blind spots and/or visual obstructions except as required for privacy.

Lounge. Provide kitchen alcove, visually hidden from lounge with dishwasher, microwave oven, and small upright refrigerator. The seating area can double as conference and as an instructor work area if arranged so that kitchen users do not have to intrude.

Mail Room. Locate the mail room off the corridor and contiguous to the administrative area for use by the staff. Provide individual mailboxes with two sided access. Design area to prevent queues of personnel from obstructing corridor passage.

Maintenance Shop. Minor miscellaneous repair of the trainer components is undertaken here by the device contractor. Base size on the number of simulators to be housed within the facility and the number of proposed maintenance/support personnel. Provide space for the storage and maintenance of simulator system technical documentation and an area where the documentation can be laid out and used for maintenance procedures.

Maintenance Storage. Size this space to support the number of simulators in the facility. This is primarily a storage space for electronic and mechanical equipment, fixtures, and publications. To keep the trainer functional for use, it is necessary to procure spare parts, technical documentation (including drawings), tools and test equipment. These items require storage and, in general, the larger the trainer the more storage will be required.

Locking hardware is required. Include an "On Site Spares" area which can be secured separately and can accommodate anticipated quantities.

Provide mobile shelving systems as needed to accommodate storage in retrofits where space allocations are restrictive.

Mechanical Pump Room. Typically contains the hydraulic and pneumatic pumps. Since both device contractor and construction contractor furnished equipment may be located in the same space, determine interface point between the two. Provide adequate access for maintenance. Include space for hydraulic fluid storage. Provide concrete curbs around perimeter of hydraulic pump bases and/or metal pan under pump seals with drainage slope to sump to retain fluid waste for proper disposal.

Isolate floors and acoustically treat walls and doors where this source of vibration and sound can adversely affect adjacent spaces. Isolate the noise transmitted through the trench to the high bay area. Avoid locating pump rooms on upper levels where sound can reverberate through structural systems.

Access to both interior of the building and exterior is recommended. Pump rooms supporting large hydraulic systems may require high ceilings to allow maintenance access with a permanent or temporary overhead crane to assist in the maintenance procedures. Allow adequate access space around and above equipment for maintenance.

Mechanical Room. This space normally contains the facility related heating, ventilating and air conditioning (HVAC) equipment as well as the sprinkler valves and piping. Area requirement for facility HVAC equipment is typically 5 percent of gross floor space; however, the requirement can vary depending on space criteria and other factors such as use of a basewide steam system. Mechanical rooms for aviation training facilities typically contain a variety of equipment types which must be accommodated early in the design. Avoid locating rooms with HVAC equipment on upper levels where sound can reverberate through structural systems. Provide adequate access space around equipment for operation, maintenance, and servicing. Locate hydraulic and pneumatic equipment which support the trainer devices in a separate pump room due to air contaminants, noise, and safety considerations. The device manufacturer's TFR will provide space requirements for equipment to be located in the mechanical and pump rooms.

Media Storage Room. Provisions for centralized storage and retrieval of each type media must be provided. In multifloor facilities, locate an additional media storage room on each floor. Include storage as needed for slides, film, microfilm, filmstrips, video tapes, audio tapes, records, computer discs and other storage media, maps and charts, projection equipment, and audio equipment. Refer to MIL-HDBK-1008C for fire protection requirements for magnetic tape and film storage. Adjustable shelving is required. Verify with the user and manufacturer if a centralized VCR control panel area is required. Provide issue window, dutch door, or counter where required for customer service.

Officer in Charge (OIC). The person charged with controlling the use of the facility, scheduling the use of classrooms and training devices and maintaining curriculum occupies this space. This person is also typically the Training Officer. This space may not be required within all facilities since this person may already have adequate office space elsewhere.

Part Task Trainer. This is usually a one or two station trainer used to familiarize the trainee with the controls and operation of the station. Generally the computers are housed in the same area as the station. These generally do not require hydraulics, but do require 400 Hz power. Size varies on these units due to changes in the number of stations and complexity of the simulation. Access floor system is required.

Pilot Ready Room. This is an area where the student pilots wait for their training briefing and "flight" in the simulator. Several trainers require the trainees to be in their flight suits during the training to make use of the g-suit in the simulation. This area must accommodate male and female changing areas where separate locker rooms are not available. The Ready Room could also double as a lounge.

Print Shop. This space may be required where a subject facility provides regional instructional support such as an In-Service Engineering Office (ISEO). Include printing equipment in the Collateral Equipment List.

Site Manager's Office. Provide a single person on-site private office for the device contractor's manager of operation and maintenance and supervisor of contractor personnel. Private conversations are conducted here between the supervisor and personnel. Provide quiet lockable office and acoustical rating complying with DM 1.03.

Tactical Library. Base justification on trainee load. Vault may be required. Refer to MIL-HDBK-1013/1, Design Guidelines For Physical Security Of Fixed Land-based Facilities, for guidance in vault design. Provide sprinkler protection in the vault.

Toilets. Specify ceiling hung partitions for easier cleaning and drainage to eliminate rusting of floor mounts. Provide solid plastic partition finish for better hygiene and graffiti resistance. Provide shelf for temporary stowage of hand carried items such as hats and books.

Vending. Provide an alcove or a separate area off the corridor such that pedestrian traffic is not restricted, but also located convenient to or within lounge area. Locate vending machines where they can be properly serviced and maintained with minimal disturbance to facility operations. Provide secure brackets to prevent overturning of machines and a hard surface floor sloped to floor drains adjacent to vending machines. Buildings having more than 100 federal employees located therein or 15,000 square feet or more should have one or more satisfactory sites for a blind-operated vending facility.

Visitor Control. Locate the checkpoint at the primary pedestrian entrance to the facility adjacent to the lobby and near administrative areas. Provide 42 inch high counter with sign-in area, under counter files, lockable storage, intercom console where required, and staff phone. Accommodate number of personnel designated by the user. Include a recessed scuff area at the entry point for control of debris from foot traffic. A vestibule is recommended for energy conservation.

2.2.2.5 Interior Design. NAVFAC DM-14.01, Interior Design provides interior design guidance. Provide imaginative and creative use of colors and furnishings. Design solutions should also be economical and the furnishings

maintainable. Fully integrate interior design with the work of other design and engineering disciplines at all stages of the facility design process. Provide only those finish systems which have a proven track record of use and testing. Selection criteria should balance all factors related to installation and usage: initial and life cycle costs, ease of maintenance, comfort, etc. Refer to appropriate tables for suggested interior finishes.

a) Color. Develop a color plan that is consistent with the building program. Use color to stimulate positive human physical and emotional reactions and to enhance the overall functions of the building. For example, color may be used to direct and orient users to color-keyed functions on floors. Color selection can also support maintenance management. As a general rule, fixed building materials (e.g., pavers, ceramic tile, resilient flooring, ceilings, etc.) should be relatively neutral. Introduce stronger accent colors on more changeable finishes (e.g., paint, wall coverings, carpet, furnishings). This will allow color changes at minimum cost as areas are refinished in the future.

b) Floors. Training facilities are subject to heavy trainee in/out pedestrian traffic. Entry points and corridors must withstand heavy foot traffic. Minimize tracked in dirt by using walk-off mats at entry points to protect flooring and to reduce maintenance. Provide durable and easily maintained floors. Consider safety, noise impact, traffic bearing requirements, chemicals and compounds used on flooring and moisture that flooring will be subjected to under normal and special conditions. Carpeting may be used in accordance with Table 2.1, Recommended Finishes, MIL-HDBK-1001/1, Basic Architectural Requirements, and MIL-HDBK-1008C, Fire Protection for Facilities, Engineering, Design, and Construction.

c) Ceilings. Metal slat ceiling systems are prohibited, since they do not allow heat to collect at heat detectors. Value Engineering reports also show significant implemented savings for acoustical tile ceilings over metal slat systems. Ceiling systems for corridors which usually must accommodate an array of utilities must be thoroughly evaluated against ease of access, sound control, fire protection requirements, future utility adaptations, life cycle cost, and maintainability. Techniques for maintenance, repairs, and changing lighting fixture bulbs in the high bay may render a finished ceiling with recessed fixture mounts inappropriate. Finished dropped ceiling in the high bay is prohibited.

2.2.2.6 Signs. Provide a signage plan, legend and details. Design signs as an integral part of an overall building and site system, to be furnished and installed under the construction contract. Economy, aesthetics, durability, flexibility, ease of installation and maintenance are important considerations of signage design. Design the system to inhibit vandalism but with flexibility to enable the addition or deletion of information. Select a mounting mechanism for the signs to permit the reuse of signs as the facility changes. Specify an easily-read letter form such as Helvetica Medium. Indicate the design, location and installation method in the plan, elevations and specifications. Require the contractor, in the project specifications, to make a comprehensive submittal of the proposed signage system and to provide information necessary for acquiring new or replacement signs. The exterior signage system must be respected both on and off the specific facility site. Any signage must also be harmonious in the landscape. Care must be taken to use signs only when necessary and to restrict the use of

random styles, placement and colors. Prepare a Signage Manual to instruct the activity in maintenance of the signage system and provide specialized equipment and materials necessary for same.

a) Entrance Sign. Entrance signs at roadway, walkway and/or building entry point may be necessary to introduce the training facilities to visitors. Position these signs for visibility and install consistently in relationship to the roadway, walkway or building which they serve. Reinforce desired building entry points for all visitors, including the handicapped, with entrance signs. Entrance signs should clearly identify the building name, function, number, and organization, and should be consistent with the installation's overall signage system. Often, several building entry signs are required to identify those activities that may be reached via a specific entry point when a building has more than one primary entrance.

b) Building Identification Sign. Training facility identification signs identify a building by name and number. Design identification signs as part of the overall signage system of an installation, using freestanding signs and/or wall mounted signs. Locate and size building identification signs for visibility from the main access street. Coordinate building numbers with the Public Works Office and fire service requirements, and position at standard locations on the building.

c) Building Directory. Locate a building directory where it is clearly visible to all visitors as they enter the building. The building directory should consist of a permanent header panel with the name of the building or the major organization in the building, plus a directory section that lists each tenant. Provide a changeable letter board with changeable letters or message slots for the directory section. In large training facilities, a building locator plan to identify building spaces, key activities, and personnel may be a necessary addition to the directory. Locate floor or building section directories to be clearly visible to pedestrians entering from elevators, stairs, or major corridors.

d) Directional Signs. Locate directional signs to indicate the location of high priority destinations, departments and functions of a building at every decision point - opposite the elevators, opposite the stairways, and at each corridor intersection. Indicate route to classrooms by number groupings. Include directions to toilets, lounge, library, vending and outdoor smoking areas.

e) Room Identification Signs. Room signs identify room entrances and services such as toilets, telephones housekeeping activities, and stairs. Room numbers in addition to names are essential for repetitive spaces such as classrooms and offices.

f) Regulatory Signs. These prohibit certain activity, for example, "No Smoking" or "No Entry." Many safety signs are required by law or regulation and may include building evacuation, fire exit maps, or exit maps specifically for the handicapped.

g) Informational Signs. Additional signs may be required to list building and activity operating hours.

h) Notice/Bulletin Boards. These are especially important in training facilities to control clutter and readily accommodate changing information throughout the building. Provide tack board surfaces or similar surface management systems to accommodate unanticipated messages, signs, posters, announcements, etc., in high traffic areas, doors, elevators, counters, columns, drinking fountains, public telephones, lounges, etc.

i) Handicapped Criteria. Coordinate all signs with the handicapped requirements of Federal Standard 795, Uniform Federal Accessibility Standards and Americans with Disabilities Act Accessibility Guidelines (ADAAG).

j) Additional Guidelines. Refer to NFGS-10440, Signs, for additional guidelines. Also, Air Force Pamphlet AFP 88-40, Sign Standards, provides excellent guidelines for Department of Defense facilities in general. The information is nonproprietary and easily modified to match specific facility designs and Base Exterior Architectural Plan (BEAP) standards.

2.2.2.7 Windows. Comply with NFPA 101 and MIL-HDBK-1008C for special requirements such as sprinklers and emergency lighting for windowless buildings and with NFPA 101 for window size and mounting heights. Natural light is desirable, but certain rooms will require blackout shades or draperies for visual aids. Sun screens, roof overhangs, and recessed windows can effectively control direct light penetration. Provide window head details to accommodate installation of window coverings and ease of operations. operable windows for natural light and ventilation where permitted by security provisions. Provide windowless spaces where security regulations apply. Do not use eye level windows which can be a distraction for trainees in classroom settings. Provide clerestory windows in the classrooms where practical for natural light and ventilation unless security criteria is prohibitive.

Provide non-obtrusive observation glass panels where desired by the user in classrooms, laboratories and other non-private trainee occupied areas. Glazed openings that are subject to accidental human impact due to location, such as sidelights that extend to the floor, should comply with 16 CFR Part 1201, Safety Standard for Architectural Glazing Materials, issued by the U.S. Consumer Product Safety Commission.

2.2.2.8 Doors and Hardware. Exterior wall overhead doors can be a critical source of extreme heat gain/loss and air and moisture infiltration into lab/ classroom settings where temperature and humidity conditions must be maintained. Overhead coiling doors to the exterior are not acceptable for environmentally conditioned spaces. Provide weathersealed insulated vertical lift, or sectional doors, or insulated removable panels with lifting eyes. Insulated panels must be easily removable by facility personnel. Provide adequately sized interior corridor doors for classrooms with oversized equipment, where possible, in lieu of exterior openings into each classroom, to minimize exposure to exterior elements. Size all doors to accommodate the path of oversized equipment from loading areas to destination and between rooms. Provide inactive leafs and removable transoms where equipment moves are infrequent. Allow for maneuverability in tight corridors.

TABLE 2.1
RECOMMENDED FINISHES - SIMULATOR FACILITIES

| ROOM | WALLS | FLOOR | BASE | CEILING | REMARKS |
|---|---|---|---|---|---|
| ADMINISTRATION | PTD OR VWC | VCT OR CPT | RUBBER | ACT | |
| AOIC | PTD OR VWC | CPT | RUBBER | ACT | |
| BRIEF/DEBRIEF | PTD | ACCESS | RUBBER | ACT | |
| CLASSROOMS | PTD | VCT OR CPT | RUBBER | ACT | 1 |
| CLASS EQUIP STO | PTD | VCT | NONE | ACT | |
| COMPUTER RM | PTD | ACCESS | RUBBER | ACT | 2 |
| CONFERENCE | PTD OR VWC | CPT | RUBBER | ACT | |
| CONTR CONFERENCE | PTD OR VWC | CPT | RUBBER | ACT | |
| CONTR SITE MGR | PTD/VWC | CARPET | RUBBER | ACT | |
| CONTRACTOR WORK | PTD | VCT OR CPT | RUBBER | ACT | |
| CORRIDORS | PTD | VCT | RUBBER | ACT | 1,3,4 |
| COTR | PTD/VWC | CARPET | RUBBER | ACT | |
| DEVICE CONTRACTOR | PTD | VCT OR CPT | RUBBER | ACT | |
| DEVICE/TRAINEE | PTD | CNC/SLR/HDR | RUBBER | EXP&P | 5 |
| ELECTRICAL ROOM | EXP | CNC | NONE | EXP&P | |
| ELECTRONIC MAINT | PTD | VCT | RUBBER | ACT | |
| GARAGE | PTD | CNC/SLR | NONE | EXP | |
| GENERAL SUPPLY | PTD | CNC/SLR | NONE | EXP | |
| INSTR STATION | PTD | ACCESS | RUBBER | ACT | |
| INSTRUCTOR WORK | PTD | CPT | RUBBER | ACT | |
| JANITOR CLOSET | PTD | VCT | NONE | EXP&P | |
| LEARNING STATIONS | PTD | ACCESS | RUBBER | ACT | 7 |
| LS COMPUTER SUPP | PTD | ACCESS | RUBBER | ACT | |
| LOBBY | PTD | QT | QT | ACT | 1,4,6 |
| LOCKER ROOM | PTD | VCT OR QT | RUBBER/QT | ACT | |
| LOUNGE | PTD | VCT/CPT | RUBBER | ACT | 1 |
| MAIL ROOM | PTD | VCT | RUBBER | ACT | |
| MAINTENANCE SHOP | PTD | VCT | RUBBER | EXP&P | 1 |
| MAINTENANCE STOR | PTD | CNC/SLR | NONE | EXP&P | 1 |
| MECHANICAL ROOM | EXP | CNC/SLR | NONE | EXP&P | |
| MECH PUMP ROOM | EXP | CNC/SLR | NONE | EXP&P | |
| MEDIA STORAGE | PTD | VCT | NONE | ACT | |
| OIC | PTD OR VWC | CPT | RUBBER | ACT | |
| PART TASK | PTD | VCT | RUBBER | ACT | 9 |
| PILOT READY ROOM | PTD OR VWC | CPT | RUBBER | ACT | |
| SHOP | PTD | CNC/SLR | RUBBER | EXP&P | 1 |
| SITE MANAGER | PTD OR VWC | CPT | RUBBER | ACT | |
| TACTICAL LIBRARY | PTD OR VWC | CPT | RUBBER | ACT | |
| TOILET | PTD | CT | CT | ACT | |
| VENDING | PTD | VCT/QT | RUBBER | ACT | 1,8 |
| VISITOR CONTROL | PTD | CPT | RUBBER | ACT | |

TABLE 2.1 (Continued)

RECOMMENDED FINISHES - SIMULATOR FACILITIES

General Notes:
1. See Glossary for finish material abbreviations
2. VWC and alkyd paint use is limited.

Remarks:
1. Provide washable paint with eggshell or semigloss finish.
2. Seal lower perimeter wall area and provide pigmented hardener/sealer on concrete floor below raised computer room access flooring to accommodate air supply plenum.
3. Carpet is discouraged. Provide other methods of sound control.
4. Metal slat ceilings are prohibited.
5. Device/Trainee spaces such as those for part task trainers adjacent to finish ceiling areas may use ceiling system to match.
6. Consider alternate durable floors such as terrazzo.
7. Consider acoustical wall panels where additional sound absorption is required.
8. Provide quarry tile base for quarry tile floors.
9. Verify finishes with device manufacturer.

Security requirements at the main entry usually require a single entry point with visitor control. Remote locks, video cameras, card readers, and/or key pads may be required by NCIS as components of the intrusion detection system (IDS). Provide closers on doors with card readers and key pads. Emergency exits should have no hardware on the door exterior. Consult public works and base fire departments for exterior hardware required for access to mechanical rooms, electrical rooms, sprinkler control rooms and fire alarm enunciator panels.

Provide four hinges where required on heavy use doors. Avoid panic hardware except where specifically required by criteria, since the Navy does not classify training facilities as schools.

2.2.2.9 Natural Lighting. Natural light is encouraged, as it contributes significantly to the energy efficiency of the building and communicates a feeling of well-being and openness. Natural light can be used in conjunction with high efficiency artificial lighting, featuring photosensitive controls for maintaining lighting levels automatically. Skylights are not permitted, due to excessive solar heat gain and leak potential. Classroom wing corridors and other interior occupied spaces may incorporate monitors with conventional roofing and vertical windows. High bay spaces may incorporate clerestory windows in cases where natural lighting is desired without any distracting or unsightly views.

2.2.2.10 Building Thermal Insulation and Vapor Retarders. Locate vapor retarders with care in view of the thermal differentials associated with training buildings. Do not use vinyl wall covering and impervious paint on the interior surface of exterior walls in humid areas, unless calculations show that condensation will not occur within the wall.

Special purpose rooms such as laboratories and computer rooms normally require stringent air conditioning requirements. Provide adequate insulation and vapor transmission barriers to minimize the loads on the mechanical system. Ceiling decks of spaces below supercooled computer rooms and perimeter walls are apt to collect condensate if not properly insulated.

2.2.2.11 Handicapped Design. Provide barrier-free access to civilian work spaces and spaces intended for public access. It is increasingly necessary to support handicapped access with the advent of more private contractors providing operation and maintenance personnel instead of utilizing military personnel. Design facilities to locate handicapped access spaces on first floor only, unless the size of the facility's administrative and other accessible areas requires a second floor. Certain portions of the facility will not lend themselves to a handicap design, such as the device area platforms, and are exempt from the requirement due to their hazardous nature. Comply with current criteria in Uniform Federal Accessibility Standards (UFAS).

2.2.2.12 Elevators and Stairs. Comply with requirements of DM 3.09, Elevators, Escalators, Dumbwaiters, Access Lifts, and Pneumatic Tube Systems and handicapped criteria in UFAS. For safety related measures, comply with ASME/ANSI A17.1, Safety Code for Elevators and Escalators, and NFPA 13, Standard for the Installation of Sprinkler Systems.

Provide freight elevators where stairs cannot accommodate the weight and size of routinely transported equipment. Consider the weight associated with transporting security vaults or training equipment to upper levels. Provide stair tread nosings that are resistant to heavy trainee pedestrian traffic volume.

2.2.2.13 Dumbwaiters. Comply with requirements of DM 3.09, Elevators, Escalators, Dumbwaiters, Access Lifts, and Pneumatic Tube Systems.

Consider a dumbwaiter where high volume floor to floor transport of such items as audiovisual equipment, publications and printing, and general supplies is required.

2.2.2.14 Access Floor Systems. Provide access flooring in computer rooms and in administrative spaces where networks are used. The underfloor space must be properly sealed if used as an air conditioning supply plenum. Provide sealer to concrete decking and exposed perimeter lower walls. Plastic laminate covering is preferred for access floor panels except where sound control is paramount.

Walls must penetrate access flooring and secure to structural slab to meet fire protection, security, and/or sound requirements. Provide sleeves and intumescent packing where pipes and conduit penetrate fire rated walls. Waterproof perimeter of depressed area if it adjoins a building edge below grade. The access floor space will usually serve as a supply air plenum.

2.2.2.15 Ceilings. Provide access where projection services, mechanical and electrical equipment, including adjustment, maintenance and shutoff devices, are located. Ceilings should be maintainable and easily repaired.

Projections from the ceiling such as sprinklers and light fixtures can impinge on clearances required for device installation and removal, as well as crane and hoist operations. Coordinate all ceiling items on a comprehensive reflected ceiling plan.

2.2.2.16 Walls. Impervious finishes applied to the interior side of exterior walls, must be carefully evaluated against dew points to prevent vapor dams and subsequent failure of the installation. Protect the corners of walls and columns in areas where equipment moves are frequent.

2.2.2.17 Acoustical Control. A Noise Level Reduction (NLR) minimum factor of 30 is required in the 70 to 75 DNL zone and an NLR minimum factor of 25 is required in the 65 to 70 DNL zone. There are no special requirements in the DNL zone below 65.

Conform to noise and sound transmission criteria cited in DM 1.03, Architectural Acoustics. Prevent sound transmission over walls. Acoustic absorbing material should be fire and smoke rated as required in MIL-HDBK-1008C.

2.2.3 Landscape Architecture. The framework for planning and design of all landscape architectural elements is found in the activity Master Plan and more specifically in the Base Exterior Architecture Plan (BEAP). General guidance for all design elements can be found in NAVFAC P-960, Installation Design. Landscape design must enhance positive image for the facility and should direct pedestrians to a primary entry. Design for minimal maintenance. Provide landscape fabric for weed prevention. Select hardy specimen species indigenous to the area. Locate hose bibbs convenient for additional irrigation.

Outdoor pedestrian-oriented spaces are often useful for building entry plazas, for break and lunch areas, and to provide pleasant views from the building interior. Design outdoor areas to harmonize with the architectural and natural site character of their surroundings, but to also moderate environmental and climatic extremes, such as noise, sun, wind and seasonal precipitations.

2.2.3.1 Site Analysis and Development Concept. If the analysis and development is successful, the biological integrity of the site will be retained or improved, while successfully meeting the program needs of the user in a comfortable, attractive and functional setting. Minimize clearing of existing vegetation and avoid excessive grading.

2.2.3.2 Planting. Guidance for planting design is provided in NAVFAC Publication P-905, Planting and Establishment of Trees, Shrubs, Ground Covers and Vines. Plantings can provide a pleasant setting and visual asset, and minimize the environmental impact of development. The following is a list of minimum guidelines to be considered in implementing new planting schemes for the facility:

a) Preserve Existing Vegetation. Existing mature stands of trees or other significant vegetation are to be preserved and enhanced, where possible.

b) Provide Indigenous Plant Materials. Plant materials chosen will be indigenous to the site.

c) Design for Minimum Maintenance.

d) Define Space and Screen Conflicting Uses. Use plant material to define space and screen visually conflicting uses, where appropriate. See section on screens and walls below.

e) Promote Energy Conservation. Plant materials are to be used to reduce energy requirements, where possible, such as shading with deciduous trees. Enhance any desirable climatic effects, such as clear areas at large glass areas oriented for winter sun heat gain.

f) Establish Unifying Elements. Use planting as a means to unify different elements of an installation.

2.2.3.3 Landscape Lighting. The creative use of lighting can greatly improve the visual character of a project landscape, while providing the nighttime functions of safety, security and path finding. In addition to simply achieving a higher level of illumination, the lighting levels, color, patterns and style should be energy efficient, attractive and functional in a coordinated landscape scheme.

2.2.3.4 Exterior Signs. Provide directional signage for pilot trainees from parking to entry.

2.2.3.5 Utilities. Grouping in corridors, underground placement, and screening and grading can de-emphasize the impact of utilities on a site. Flow tests must be conducted to determine the available water supply for fire protection. Indicate a static pressure and a residual pressure at a certain flow.

2.2.3.6 Site Furnishings. In conjunction with the site and landscape design, provide appropriate signs; structures; outdoor furniture and equipment, such as tables and seating; vending machine shelters; telephone booths; screen wall and fences; as well as the more symbolic elements, such as flag poles, memorials and military equipment displays. The lack of coordination, as well as concern for detail, are the primary problems related to site furnishings. Select site furniture that is simple, requiring low maintenance, and relating in color, texture, and form to the building design and established base character and BEAP guidelines. Definitive design and other data for flagstaffs are available in MIL-HDBK-1034, Administrative Facilities.

2.2.3.7 Equipment Screens and Walls. Screens and walls for mechanical and electrical equipment are encouraged for aesthetic purposes, but can severely penalize equipment performance. Carefully coordinate design with each engineering discipline. Shade for mechanical equipment is desirable; however, leaves may clog equipment.

2.2.3.8 Selection of Plant Material. Select plant materials on the basis of hardiness and degree of maintenance required. Avoid plants which require more frequent attention than the users can provide to stay in a healthy condition or have an attractive appearance.

2.2.4 Civil. NAVFAC Criteria Manual Series (MIL-HDBK-1005 series) on civil engineering, provides general guidance for civil engineering, site work and other related topics. Refer to MIL-HDBK-1008C for location and spacing of fire hydrants. Refer to Manual on Uniform Traffic Control Devices for Streets and Highways, (MUCTCD) for traffic control devices. Provide surface bearing capacity for heavy equipment or trucks outside the high bay doors. Consider loaded forklift wheel loads on the paving design. Forklifts will normally be used to transport equipment into the building from the delivery truck. Edges more than 1 inch in height cannot be negotiated by forklifts. Provide clear path for delivery and removal of equipment from access roads to loading dock. Account for all obstacles and provide adequate turning radii.

Coordinate location of mechanical equipment pads with mechanical design and show major pieces of equipment on civil engineering drawings. Locate noisy equipment remote from occupied spaces and as near as possible to the mechanical spaces. Distribution piping (utilities, refrigerant, condenser water etc.) should enter the building only through mechanical spaces. Shade is desirable; however, equipment should not be located beneath trees, where it can become clogged with leaves and debris.

2.2.4.1 Roads, Parking, and Walkways. These are three of the most land consuming uses on a site. Negative visual impact can be minimized by locating facilities convenient to each other, encouraging pedestrian use and other non-vehicular modes of access.

Vehicular or pedestrian paving should be in character with a safe, functional and visually pleasing landscape. The sharing of parking and road requirements will minimize total impact. Small parking lots are usually preferable to large lots, since they allow for conforming to the natural topography and other site features and are visually less obtrusive. Provide appropriate paved area and adequate maneuvering space for semi-tractor trailer and other truck deliveries. Provide ramps at curbs along routes leading to storerooms to facilitate wheeled access. Accommodate training device transportation into and out of the building through adequate turning radii and appropriate loading facilities. Provide vehicle protective barriers for transformers, light standards and fire apparatus as required.

Pedestrian access to training facilities is normally restricted to a single entrance point, due to security criteria. Pedestrian traffic to and from the parking lot is heavy due to multiple daily training sessions. Determine if egress is permissible through secondary exterior doors and, if so, accommodate with walkways. OPNAVINST 5530.14B, Physical Security and Loss Prevention, prohibits parking of privately-owned vehicles within 15 feet of any building. Designate special parking spaces for pilot trainees, COTR, and device contractor as required by the user.

Include concrete surfaces for bicycle racks and motorcycles. Storm drainage and other grates must be oriented with parallel slots perpendicular to the paths of bicycles. Criteria for vehicle parking area design is shown on NAVFAC drawing number 1404837, entitled "PARKING AREA CRITERIA FOR VEHICLES."

2.2.4.2 Handicapped Access. Provide curb ramps, access aisles, and handicapped parking spaces near accessible entrances.

2.2.4.3 Loading Dock Ramp Protection. Each facility requiring a loading dock ramp should be provided side-edge protection in compliance with Section 1910.23c of Public Law 29, Code of Federal Regulations, Occupational Safety and Health Act Standards Manual.

2.2.5 Structural. Structural design should comply with MIL-HDBK-1002 series, Structural Engineering, and NAVFAC P-355, Seismic Design for Buildings. Base an economical structural system on facility size, projected load requirements, quality of locally available materials, local labor and construction materials, and local wind, snow, seismic, geologic and permafrost conditions. Design in flexibility for future high bay ceiling height extensions.

Depress structural framing and slabs in lab areas where access flooring occurs to provide uniform, continuous finish floor levels between adjacent spaces.

Include the weight of any classified file safe such as those in Library/Learning Centers in floor loading.

2.2.5.1 Clearspan requirements. Columns in the high bay training area are typically prohibited. Check excursion limits for device and accommodate flexibility.

2.2.5.2 Weight Handling Equipment. Cranes and monorails should comply with DM 38.01, Weight Handling Equipment. Conform to NAVFAC NFGS-14637, Cranes, Overhead Electric, Underrunning (Under 50,000 Pounds), and NFGS-L14622, Monorails with Electric Powered Hoists, where applicable. Provide platforms, catwalks, access ladders, and any other provisions for inspection and maintenance of cranes and hoists.

Three-ton bridge cranes or monorails are normally required for dome type devices. Obtain user and device manufacturer input regarding controls and speed criteria for hoist, trolley, and bridge, hook heights, capacities and service area. Micro-inching is required in horizontal and vertical movement. Bridge cranes allow more extensive area of service and may alleviate need for redundant smaller special purpose cranes. Acknowledge crane area of service. A 1/2 ton hoist may be required for servicing the visual displays, gravity ("G") seats, and canopy removal. Where mezzanine areas are used for storage, provide a 1/2 ton crane and rail. Provide crane hook height clearance and bridge crane operating limit diagrams on drawings as required by the device manufacturer for the highest expected level and area of operation. Note that lifting the device will require more clearance than necessary for stationary position.

2.2.5.3 Floors. Design floor slabs along the travel path of any equipment to withstand the heaviest wheel loads anticipated during the installation. Obtain the weights and attachment locations of the simulator and associated equipment from the equipment manufacturer via the procuring activity. Current computer equipment trends are toward more compact, yet denser and heavier components. Future floor loads will probably localize into more extreme concentrated loads. Some training systems may be highly sensitive to external shock and vibration and may require damping or shock isolation mounting. Six DOF motion systems require a substantial reaction mass to resist the forces and moments placed on the floor. Motion systems may

require device area floor slab isolation from the rest of the facility. Isolate the mechanical equipment room floor slabs from the remainder of the facility.

2.2.5.4 Roof Loads. Mechanical equipment is preferred at ground level; however, where roof mounting is necessary, design screening in accordance with local wind loads and directional patterns. Anticipate other roof structure mounted accessories, such as catwalks, ladders, hoists and cranes.

2.2.6 Heating, Ventilating and Air Conditioning. Comply with MIL-HDBK-1003/3, Heating, Ventilating, Air Conditioning, and Dehumidifying Systems and refer to MIL-HDBK-1008C for coordination with fire protection systems. Provide 100 percent capacity back-up HVAC equipment to maintain critical operations. Coordinate exterior mechanical equipment location with civil design. Locate noisy chillers and other equipment remote from occupied spaces and as near as possible to the mechanical spaces. Shade is desirable; however, equipment should not be located beneath trees, where it can become clogged with leaves and debris. Distribution piping for utilities, including refrigerant and condenser water, should enter the building only through the mechanical room. Avoid routing chilled water piping over computer areas and trainer devices, to prevent damage to high cost equipment from leakage and condensation. Provide isolation valves to facilitate maintenance without system shutdown. Comply with Army TM5-805-4, Noise and Vibration Control, where adjacent spaces and/or sensitive equipment cannot tolerate noise and vibration. Special requirements for designated spaces follow:

Computer Rooms. Design spaces containing computers and other electronic equipment requiring access flooring systems in compliance with the Sections 4 and 8 of MIL-HDBK-1012/1, Electronic Facilities Engineering, and Chapter 17 of the ASHRAE HVAC Applications Handbook. The most demanding air conditioning requirement will be the computer room. A prime user complaint is lack of cooling for critical and high cost computer equipment. Denser equipment modules require more air volume and generate intensely concentrated heat loads. Select HVAC units specifically designed for computer room installation. Divide required capacity incrementally and provide multiple units to match the load. Install one or more extra incrementally sized units to allow for back-up. Computer equipment has a narrow range of operation with regard to temperature and relative humidity. Operation outside of the required range of temperature and relative humidity will cause damage and a decrease in the life of components. The building HVAC system should accommodate the personnel comfort and external environmental loads; however, a dedicated system to handle computer equipment loads is essential. Computer equipment is subject to revision and can easily overtax a building HVAC system. A dedicated system will help accommodate future upgrades with minimal impact on the building HVAC system. Provide methods for direct cooling to equipment. Most computer cooling fans are near the bottom of the equipment. Provide floor fed direct air. Avoid air current paths that overcool the occupants while undercooling computer equipment. Typical equipment units requiring direct fed cooling are freestanding computer processing units and instructor/operator consoles.

Dust and particulate filtration systems may be required in the TFR for the HVAC system to provide dust-free environment. Consider filters, seals, positive pressures, forced air at entrances, and anterooms as required.

High Bay Area. Coordinate structural, crane and hoist systems, and device equipment amenities with routing of supply and return air ductwork. Platforms, HVAC, and ductwork supporting the device are normally supplied by the device manufacturer.

2.2.6.1 Design Conditions. Design conditions for comfort conditioning should be determined in compliance with MIL-HDBK-1190. Electronic and computer procurement documents require that equipment function properly in an air conditioning environment between 60 degrees and 80 degrees Fahrenheit and between 45 degrees and 120 degrees for mechanical equipment including hydraulics. Special facility conditions follow:

a) Space conditioning requirements below 75 degrees Fahrenheit (F) at 50 percent relative humidity, or tolerances tighter than plus or minus 2 degrees F and plus or minus 10 percent relative humidity are prime causes of operational problems after the building is occupied. Such requirements should be justified by NAVAIR and/or NAWCTSD. If these are valid requirements, pay special attention to architectural treatments with respect to space moisture sealing and insulation.

b) Dedicated heat rejection equipment (such as compressors, condensers, and condensing units) serving training devices should be located outside of environmentally conditioned spaces. For equipment requiring internal cooling (e.g. cockpit cooling, projection domes, etc.) or with special cooling requirements outside normal comfort air conditioning limits, cooling should be provided by the manufacturer of the training equipment.

c) The environment for hydraulics should be between 45 degrees and 120 degrees. Provide heat as necessary to maintain the minimum temperature.

2.2.6.2 Ventilation. Provide ventilation rates for occupied spaces as required in ASHRAE STD 62, Ventilation for Acceptable Indoor Air Quality. Provide thermostatically controlled forced ventilation in mechanical, electrical and hydraulic spaces. Cool hydraulic pump rooms and compressor rooms by mechanical ventilation only.

2.2.6.3 Zoning, System Selection and Part Load Performance. Occupancy of classroom areas varies drastically with respect to training schedule. Consider each classroom/training area as a separate temperature and humidity control zone. Provide individual temperature controls for each classroom. Size terminal equipment to accommodate minimum as well as maximum loads. Multiple air handling units (allowing staged turn-down of system capacity as sensible load falls) should be considered. Terminal reheat is permitted to meet part-load humidity performance requirements; in electronic equipment spaces, the amount of reheat available should be approximately equal to the sensible electronic load within the space.

2.2.6.4 Special Requirements for WTT and OFT

a) Mechanical Pump Room. This space is normally not air conditioned. Provide adequate ventilating air flow. Chilled water supply and return lines are required in six DOF motion systems for connection to a heat exchanger which is attached to the large hydraulic pumps. Chilled water source should be provided by the manufacturer of the training device.

b) Device Area or Trainee Room. Most motion simulators will have integral air conditioners for the cockpit and dome areas provided by the device manufacturer. Locate manufacturer provided condensers, condensing units and other device associated heat rejection equipment outside the facility such that heat removed from the device is not released into the device area and does not become part of the facility air conditioning load. Non-motion simulators normally require specialized ducting from manufacturer provided air conditioners to cool the space inside the dome and cockpit. Training equipment installed in this area by the manufacturer should be equipped with integral filters at cooling air intakes to minimize dust circulation in and around sensitive electronic equipment. See "trenches" below for routing of ducts. Temperature stratification within the high bay must be avoided as the top of the dome visual display will collect heat on the inside surface, requiring cooling air at that point. Provide drains for collection and discharge of condensate. High bay ceiling fans may assist in circulating stratified air. Locate ceiling fans above lighting to avoid distracting shadows from moving blades. Where tape and/or disc drives are used in this area, refer to requirements of Computer Rooms above.

c) OFT Trainer Room. Exhaust air from under the platform directly to outside. Provide supply make up air.

d) Maintenance Storage. Air conditioning is required to prevent deterioration of the parts stored.

e) Computer Room and Instructor/Operator Station. Select air conditioning units specifically designed for electronic facilities.

2.2.6.5 Controls. Direct digital control (DDC) is the control system of choice for HVAC systems. Consider life cycle cost, maintenance requirements, and customer preference.

2.2.6.6 Trenches. The simulator manufacturer may require a trench to accommodate dome and cockpit air conditioning ducts. Flexible ducts for cockpit conditioning will extend through a trench cover cutout up and into the cockpit housing. Identify trenches which contain air ducts and provide cover plate cut out configurations per device manufacturer recommendations. Seal inside of trench with epoxy except where synthetic hydraulic fluids are used. Consult hydraulic fluid manufacturer for trench sealer where synthetic fluids are used.

2.2.7 Plumbing. General guidance for plumbing design is provided in DM-3.01, Plumbing Systems. Coordinate plumbing with structural design to avoid conflicts between underground pipes, trenches and footings. Provide shut-off valves to isolate systems when doing maintenance, so that entire facility is not affected by an outage. Do not locate roof drains and roof drainage piping over computer spaces and trainer devices to prevent damage to equipment in case of leakage or condensation.

Computer Room. Provide rising water alarm under the access floor to monitor condensate and water table seepage. Consider floor drains below access floor where water infiltration is likely.

2.2.7.1 Hydraulic Support and Pump Rooms. Floor drains subject to oil spills must drain to an oil separator. Provide flexible couplings between pumps and piping systems for vibration and sound control.

Simulator hydraulic equipment is usually provided by the simulator manufacturer. Where six DOF motion systems are used, the hydraulic pumps normally include a manufacturer provided chilled water system to remove the heat from the fluid. Visual equipment within the high bay may also require accommodations for manufacturer provided chilled water supply and return lines for cooling. Any trainer device requiring chilled water cooling should include a chiller with its own procurement.

Hydraulic Repair Shop. Provide for on-site collection of hydraulic fluid. Pneumatic piping for standard shop air may be required by the user.

2.2.7.2 Trenches. Training equipment utilizing hydraulic power normally requires routing the hydraulic lines in trenches covered by metal plates. Plumbing, pneumatic hoses, ducts, sprinkler piping, and cabling are also routed in trenches. Trenches typically route utilities between the computer room and trainer and between the mechanical room and trainer. Verify the layout of the trenches between equipment with the facility designer during the design. Kerfed plate covers are required for drainage into trench from slab level. Trench covers must support the wheel load of a loaded forklift. The device manufacturer normally supplies all piping, clamps, brackets, and supports required for hydraulics.

Hydraulic systems can be pressurized to 2000 pounds per square inch (psi) and a leak in the line can be extremely hazardous. The heavier the load on the motion system and the more responsive a motion system has to be, then the higher the pressure used in the system. Assemble hydraulic fluid piping systems with O-ring sealed straight threaded connections. Tapered National Pipe Thread (NPT) joints are not permissible.

Slope hydraulic piping trenches away from computer rooms and to a sump to collect waste fluid for proper disposal. A dead level floor area is required where the trainer supports for six DOF and domes meet the floor at the same elevation. Comply with requirements of MIL-HDBK-1005/9, Industrial and Oily Wastewater Control, and MIL-HDBK-1005/8, Domestic Wastewater Control. Treat fluid as a pollutant in accordance with federal, state, and local regulations. Federal agencies are required to properly manage the use and disposal of all toxic substances. Conform to the installation's spill prevention control plan. Pneumatic hoses may be routed in the trench by the manufacturer for flight crew filtered breathing air. Carefully coordinate trench layouts with device manufacturer to avoid conflicts with catwalk platform bases and other obstructions to trench access.

Device Area or Trainee Room. Provide condensate drains for the cockpit air conditioners. Incorporate a lip to prevent contamination of the drain with hydraulic fluid.

2.2.7.3 Compressed Air. Comply with the requirements of NAVFAC DM-3.5, Compressed Air and Vacuum Systems.

Hydraulic Repair Shop. Pneumatic piping for standard shop may be required.

2.2.7.4 Electric Water Coolers. Splash resistant basins are recommended to prevent slippage on the floor and shock hazard. Handicapped models should be recessed as required to minimize obstruction to passage.

2.2.7.5 Waste Systems. Guidance is provided in DM-3.01, Plumbing Systems. Accommodate oil separators and interceptors as well as special drain requirements for HVAC, chillers, and trainer equipment.

2.2.8 Electrical. Typically, specific electrical requirements for training facilities and/or training device(s) are contained in a TFR or Technical Manual. Applicable NAVFAC design manuals and military handbooks provide general guidance on electrical engineering. Use them in conjunction with the current editions of NFPA 70, National Electric Code, and ANSI C2, National Electric Safety Code.

Provide required filtered/conditioned power with the electrical parameters outlined in the Simulator or Training Device TFR. Provide centralized 400 Hz solid state invertor and 24 VDC power, both with backup and in accordance with parameters outlined in the TFR.

Mechanical Pump Rooms. Provide steel conduit with liquid type fittings where electrical cables are located in the same trench with hydraulic piping.

Classrooms. Locate 120 volt convenience outlets for use of portable audiovisual equipment. Provide conduit stub-outs with pull wire in ceiling space for future ceiling mounted audiovisual aids, such as projection systems.

Corridors. A shock hazard exists from convenience outlets in areas where floor buffers are used. Provide locking type outlets mounted high above splash zones.

2.2.8.1 Closed Circuit Television. Comply with MIL-HDBK-1004/7, Wire Communication and Signal Systems. Centralized VCR Signal Distribution System should be provided where possible, in lieu of portable equipment. Portable VCRs on mobile stands are repair intensive and require unnecessary set-up time in individual rooms. Include cable outlet in the lounge for training.

2.2.8.2 Telecommunications. Provide a structured telecommunications system including interior and exterior conduits, cabling, pull wire, telecommunications backboards, and outlets. Provide a telecommunications outlet for each elevator in the facility. Refer to MIL-HDBK-1012/3, Telecommunications Premises Distribution Planning, Design, and Estimating for interior telecommunications cabling. Consider telephone and communication outlets in maintenance areas and dedicated lines at devices where networking is anticipated. Accommodate any special simulator contractor communication requirements which may require intercom features integrated into the telephone system.

2.2.8.3 Warning Lights and Signal Circuits. Accommodate remote locks, card readers, safety alarms, and key pads for doors.

2.2.8.4 Computers and Training Devices. Refer to manufacturer's TFR and comply with MIL-HDBK-1004/1, Electrical Engineering Preliminary Design

Considerations, MIL-HDBK-1004/4, Electrical Utilization Systems, and MIL-HDBK-1012/1. Comply with FIBS PUB 94, Federal Information Processing Standards Publication, for computer rooms. In training facilities with high concentrations of micro computers, control the effects of harmonics when designing branch circuits serving the computer areas. Provide surge protection, filter/conditioning power in accordance with requirements of the TFR. In the absence of specific requirements in the TFR, review the quality of power which will serve the proposed facility and provide surge protection, filters, and conditioners as necessary. See Trainer Facility Data and Equipment Summary sheets for each aircraft type in this handbook for preliminary planning purposes.

2.2.8.5 Lighting. Overhead fluorescent lighting can hamper vision at radar scopes, test scopes, and other CRT screens. Provide appropriate lighting for these functions to reduce glare. Provide fluorescent fixtures with battery packs for emergency lighting and/or wall packs in lieu of a central system.

a) Brief/Debrief. Provide means for reducing light level by discrete switching of lights.

b) Console. Provide direct and aimable overhead lighting at trainer console location with dimming controls. Provide adequate lighting with discrete switching in addition to the dedicated console lighting for janitorial services and maintenance after working hours.

c) High Bay. In high bay areas, include provisions for maintenance access to fixtures for repair and re-lamping. Do not locate lighting fixtures directly over a motion-based simulator cockpit. Consider wall mounted lighting. Task lighting for device access platforms is normally supplied by the device manufacturer; however, circuitry (junction box) for this function must be provided convenient to the platforms.

(d) Classrooms. Provide classroom lighting controls (dimmers and/or selective lamp and ballast switching) with discrete circuits for the front of the room to allow for effective visual use of television monitors, projectors, view graphs, etc.

(e) Instructor Station/Console. Task lights may be required.

2.2.8.6 Lightning Protection. Perform a lightning protection risk assessment on all aviation training facility types, in compliance with Appendix I of NFPA-780, Lightning Protection Code, to justify lightning protection when required by the regional Engineering Field Division. Comply with applicable sections of MIL-HDBK-1004/6, Lightning Protection.

2.2.8.7 Facility Low Voltage Power. Refer to applicable TFR or Technical Manual and comply with MIL-HDBK-1004/1 and MIL-HDBK-1004/4. Generally provide 480Y/277 volt, three phase, four-wire service to the facility along with dry type transformers to step voltage down for 120, 208 and 240 volt requirements.

2.2.8.8 Intrusion Detection System (IDS). Facility IDS systems are procured and installed via contracts administered by NCIS. Coordinate with NCIS for facility planning, design and construction schedules. IDS systems including sensors and alarm panels.

Provide a commercial power supply, conduit, pull wire, and associated control system conduit for IDS. IDS for Marine Corps projects are separately funded and managed and do not require NCIS coordination. Provide IDS support requirements and startup specification where required, in accordance with MIL-HDBK-1012/1.

2.2.8.9 Uninterruptible Power Supply (UPS). UPS systems, when required and justified by the user and dedicated to the support of an item of personal property, are typically procured for Military Construction(MILCON) projects via contract administered by Naval Facilities Engineering Services Center East Coast Detachment (NFEFC), and are installed by the facility construction contractor (i.e., Government furnished/contractor installed). Provide UPS support requirements and startup specification where required, in accordance with MIL-HDBK-1012/1.

2.2.8.10 400 Hz Power. Comply with MIL-HDBK-1004/5, 400-Hertz Medium-Voltage Conversion/Distribution And Low-Voltage Utilization Systems. Due to the size of the load, solid state 400 Hz power supplies located in close proximity to the utilization equipment are required.

2.2.8.11 Facility Shielding. TEMPEST shielding must be validated by the Naval Electronics Systems Engineering Center (NESSEC). MIL-HDBK-1195, Radio Frequency Shielded Enclosures, provides additional guidance.

2.2.8.12 Grounding. Building grounding system should comply with NFPA 70. Computer/electronic signal grounding system , if required, should comply with MIL-HDBK-419A, Grounding, Bonding, And Shielding For Electronic Equipments And Facilities, and NFPA 70. When conflicts arise between facility and/or training device requirements and MIL-HDBK-419A and/or NFPA 70, the MIL-HDBK-419A and NFPA 70 will rule.

2.2.9 Fire Protection. Comply with MIL-HDBK-1008C, Uniform Building Code (UBC), and NFPA 101. Classroom facilities for Navy installations are considered "business" occupancies per NFPA 101. Assembly occupancies, conference rooms and classrooms with fixed seating, require special attention. Requirements for sprinkler systems, carbon dioxide extinguishing systems, fire alarm systems and protection of electronic equipment installations, are determined by MIL-HDBK-1008C. Hand held portable halon extinguishers are permitted; however, automatic halon extinguishing systems are not. Convey fire alarm signals to the base fire department via the base fire reporting system. Verify the type of system with the station fire department.

a) Hydraulic Fluid Piping Systems. High pressure 2000 psi hydraulic fluid has a high flashpoint and atomizing fluid leaks can self ignite with friction. Spaces containing exposed hydraulic fluid piping are subject to special protection. Provide fire stop seal where piping and cable in trenches pass through fire rated walls.

b) Hydraulic Pump Rooms. Provide sprinkler protection in hydraulic piping trenches. Hydraulic piping trenches and pump rooms are potentially Class I electrical hazard areas per NFPA 70 depending on the characteristics of the hydraulic fluid used. Specify electrical fixtures in

the pump room as Class I, Division I explosion proof. Provide two-hour fire resistive rated perimeter walls, if an ordinary petroleum-based hydraulic fluid is used.

c) Computer Rooms and Other Electronic Spaces. Comply with MIL-HDBK-1008C. Provide sprinkler protection. Controls should automatically shut down computer, electronic and simulator power upon activation of the sprinkler system. Provide a plaque citing, "WARNING--Fire suppression system will shut down computer power to minimize damage--loss of data may occur." Smoke detection is required in subfloor spaces. Design computer/electronic and air conditioning equipment power to shut down upon activation of sub-floor smoke detectors in the associated room. An automatic carbon dioxide fire extinguishing system may be required by MIL-HDBK-1008C. Place exits in accordance with occupancy counts and travel distances around equipment to comply with NFPA 101.

d) Media Storage Rooms. Comply with NFPA 232, Protection of Records.

e) High Bay. Fire protection beneath the simulator device should consist of either a fixed, automatic carbon dioxide fire extinguishing system or smoke detectors and a wheeled carbon dioxide extinguisher. Refer to MIL-HDBK-1008C. Provide ionization-type smoke detectors in either case. Provide a fire alarm audio and/or visual device connected to the building fire alarm system to alert the trainee in the simulator module. Provide sprinkler piping and heads with heat detectors in hydraulic trenches. Extend sprinkler piping and provide tap for device protection.

2.2.10 Safety. The design of all military facilities that serve as places of employment should conform to, or be consistent with, all applicable standards published under the Occupational Safety and Health Act (OSHA) of 1970. Note that Chapters 5 through 7 of this reference state that whenever construction criteria and OSHA standards conflict, "the standard providing the greatest degree of safety should govern." Obtain a System Safety Working Group (SSWG) Preliminary Hazard List (PHL) and Risk Assessment Code (RAC) established by the activity and found in the facility study. Typical hazards include equipment guards and clearances, carbon dioxide discharge and hydraulic systems.

Moving and electrically energized parts and pressurized hydraulic systems are primary concerns. Include a safety eyewash/shower in accordance with ANSI Z358.1, American National Standard for Emergency Eyewash and Shower Equipment where hydraulic or other petroleum, oil, and lubricant (POL) materials are used in the building. Arrange for hydraulic pumps to shut down automatically if a leak or break occurs in the line at any point. Provide emergency shutoff switches for the hydraulic pumps at the instructor's station. Provide three feet safety clearances around training devices. Paint floor around any rotating device yellow and black and indicate the type of hazard, e.g., "Strike hazard-rotating device - stay clear." The TFR requires equipment manufacturers to identify safety concerns for the facility design. Accommodate the following manufacturer provided safety features in the facility electrical design:

a) "DEVICE IN OPERATION-DO NOT ENTER" lighted flashing signs indicating trainer operation and red warning flashers are located at entry

doors to operate whenever the motion system hydraulics are pressurized. Both indicators must be visible from all approach points.

b) Device area door alarms and/or hydraulic equipment shutdown for safety of entrants.

c) Emergency egress lights are located within the on-board trainee/instructor areas to allow safe egress in event of power failure. An emergency mode of OFT ingress/egress ramp deployment is also provided.

d) Emergency off switches are normally provided at all rack clusters and other locations where personnel may be working to shut down the entire trainer system.

2.2.11 Security. A checkpoint for identification of entrants to the building may be required. MIL-HDBK-1013/1 provides security information.

2.3 Collateral Equipment. When MILCON "Personal Property" facility projects are programmed, the installation criteria for the equipment must be shown in, or attached to, the facility studies for the projects involved. Major claimants, users, and equipment procurement agencies for projects of this type, are responsible for providing these criteria as part of the MILCON planning process. "Personal Property" is defined as plant equipment which is procured and installed by the major claimants, users, or equipment procurement agencies, with funds from other appropriations. This category of equipment includes technical, training, simulation, and automated data processing equipment. Detailed requirements for the aforementioned can be found in NAVFACINST 11010.44E.

Furniture items must be researched and specified in accordance with the Federal Acquisitions Regulations (FAR) Part 8 Required Sources of Supply. Each furniture piece specified must be the lowest priced item which meets the minimum functional and aesthetic needs of the facility which they will support. The functional aspect of each furniture piece must consider, as a minimum, function, ergonomics, appropriateness, and maintainability. Aesthetics must consider, as a minimum, scale, style, finishes and fabrics where applicable. All furniture items must be a level of quality which is comparable to the finishes specified for the facility itself.

2.3.1 Collateral Equipment List. The collateral equipment list is an essential programming and budgeting document. Preliminary collateral equipment lists are a means to establish a budget for funding purposes and are not intended to be used as a "buy" list. Consult the Project Interior Designer at the EFD to assist in developing functional requirements as part of the interior design process. Integrate these functional requirements with the building design and space planning effort, which is reflected in the Furniture/Equipment Footprint. Maintain a continuing update of the Collateral Equipment List with the using activity, to ensure all budget estimates are current and are adequately accommodated in the design. Include fire extinguishers and consider shredders or incinerators where classified material is used.

2.3.2 Furniture/Equipment Footprint. The Furniture/Equipment Footprint should use standard or "generic" furniture sizes to demonstrate the adequacy of each space area and the Collateral Equipment List, and to communicate to other engineering disciplines the utilities and services required for each space. It also demonstrates that life safety exit patterns are accommodated with the furniture and equipment in place. Provide a Furniture/Equipment Footprint for the PE phase or prior to 35%.

Locate lockers for books, if required by the user, for easy access between classes. Lockers in the corridor or elsewhere in the facility are at the discretion of the user. Consider locker groupings for personal belongings and foul weather gear near the main entry or student lounge.

2.3.3 Training Aids

2.3.3.1 Special Training Device Requirements. Maintain a continuing update of the proposed equipment with the user, to ensure all items are current and are adequately accommodated in the design.

2.3.3.2 Personal Computer (PC) Stations. PC based trainers with 1 or 2 monitors for use with interactive courseware may be required.

2.3.3.3 Audiovisual Requirements

a) Rear Screen Projection. Rear screen projection is discouraged in light of improved state-of-the-art media and additional space requirements. Where rear screen projection is essential, provide at least 6 feet clear space width behind the screen, which can accommodate the projection path and serve as media storage and instructor work space.

b) Presentation Hardware and Projection Systems. Personal computer (PC) based digitizing graphics hardware and projectors are current state-of-the-art media for visual aids in the classroom.

c) Slide and Overhead Projectors. Provide storage space for portable carts. See concerns for aspect ratios below.

d) Projection Screens. Base selection of permanently mounted or stand alone screens on user preference. Permanently mounted screens can limit marker board area. Base justification of electrified projection screens on local requirements; however, maintenance and repair costs must be considered. Successful visual presentations depend on arrangements of the marker board and projection screen relative to the seating configuration.

1) Avoid visual obstructions. Provide clearspan structural systems where possible. Large demonstration tables when raised on platforms can obscure the lower areas of marker boards.

2) Slope the floor and raise the speaker's platform only where space is dedicated to projection and large capacity lecture functions.

3) Consider the viewing distances.

4) Conform to the vertical and horizontal viewing angles. Place seats at a distance from a screen not less than twice nor more than six

times the width of the screen image to be viewed. The angle of elevation from the eye to the top edge of the screen or marker board should not exceed 30 degrees. Where room or seating depth is known, the screen width can be determined by W=D/6 (preferred) or W=D/10 (minimum), where W=screen width and D=depth of room or seating. Select particular projection equipment based on aspect ratios compatible with height and width ratios for the screen. Refer to Time-Saver Standards for Building Types, 2nd edition, McGraw-Hill Book Company, for graphic data on projection angles and screen widths. Consult Architectural Graphic Standards, John Wiley and Sons, for viewing zone limits and projection medium aspect ratios.

e) Chalkboard and Marker Boards. Porcelain surface marker boards are generally preferred since they are cleaner and can double as projection screens; however, scrutinize their use in high security areas due to the potential retention of images after erasure. Avoid chalkboards in computer rooms. Airborne chalk dust can damage computer hardware.

2.3.3.4 Electronic Information Delivery Systems (EIDS). Accommodate computerized EIDS and carrels where required. Carrels must be wider than normal to accommodate the EIDS.

2.4 Supporting Functions and Utilities. The facility usually requires administrative functions not directly related to the trainers, but necessary for the smooth functioning of the training organization. These functions usually include the Officer in Charge and NCO assistant, and the secretarial staff.

2.5 Supporting Personnel. These personnel include the administrative personnel, ISEO, training analysts, and others not absolutely essential to the day to day operations, but necessary for training effectiveness. Accommodate special contractor support spaces such as Contractor Total Training Systems Support (CTTSS) or any level of private contractor support where required.

2.6 Special Contractor Support Spaces. The operation and maintenance of simulators is normally provided by contractors instead of Government personnel. As such, the contractor has control of simulator spare parts and maintenance areas and usually requires lockable spaces and an administrative office space.

2.7 Environmental Requirements. For applicable discharge criteria, consult with the NAVFAC Criteria Office and the cognizant EFD. Refer to MIL-HDBK-1005/8, Domestic Wastewater Control. Design facilities to meet environmental requirements at federal, state and local levels. Obtain a MSDS (material safety data sheet) on every toxic or suspected toxic product to be used at the facility and design in protective measures and ventilation methods. Comply with all applicable pollution abatement criteria.

TABLE 2.2
TRAINER FACILITIES DATA-F/A-18 WTT

Non-motion devices with 2- 40' diameter projection domes
Room dimensions shown are minimums unless noted.
Model facility plates may show site specific larger dimensions.

**** CAUTION: This document is for preliminary planning only.****
****Verify with NAWCTSD and NAVAIR prior to use.****

**REFERENCE DOCUMENTS**

General Requirements for Aviation Training Facilities, NAWCTSD Orlando
TRAINER FACILITY INFORMATION, NAWCTSD Orlando
Trainer Facility Report, F/A-18 WTT TFR, September 1990, Hughes Aircraft Co.

**ARCHITECTURAL**

| SPACE NAME | MIN DIMENSIONS (LxWxH) | MAX NOISE | ACCESS LEVEL | FLOOR | REMARKS |
|---|---|---|---|---|---|
| Device/Trainee Area. | **120'x 65'x 44'** | | 55Db(A) | none | 2 |
| Instructor/Operator | **40'x 23'x 10'** | | 55Db(A) | 18" h | |
| Debrief Station | **23'x 17'x 10'** | | 35Db(A) | verify | |
| Computer Room (CIG) | **32'x 23'x 10'** | | 65Db(A) | 18" h | 2 |
| Computer Room (digital) | **46'x 40'x 10'** | | 65Db(A) | 18" h | |
| Mech Pump Room (2-ea) | **20'x 10'x 10'** | | 75Db(A) | none | 1 |

General Notes:
Above requirements are WTT specific. See other data for administrative & support spaces. Equipment noise is indicated on the F/A-18 (WTT) Trainer Equipment Summary.

Remarks:
1. Reduce noise to trainee and instructor area.
2. 44' is clear crane hook height. Clear ceiling height is dependent on crane configuration.

TABLE 2.2 (Continued)
TRAINER FACILITIES DATA-F/A-18 WTT

**STRUCTURAL**

Device transport method: 3 ton capacity overhead bridge crane at high bay.
Vibration Control. Isolate mechanical room. Resonant frequency = 13 Hz maximum for light valve platforms.
Special permanent installation/removal equipment: See 3 ton crane above.

**MECHANICAL**

| SPACE NAME | TEMPERATURE DEGREES(f) | HUMIDITY PERCENT | SPECIAL DUCTING | REMARKS |
|---|---|---|---|---|
| Device/Trainee Area | 60-80 | 40-60 | remark 1 | 2 |
| Instructor/Operator | 60-80 | 40-60 | remark 4 | |
| Debrief Station | 60-80 | 40-60 | | |
| Computer Room (CIG) | 60-80 | 40-60 | remark 5 | |
| Computer Room (digital) | 60-80 | 40-60 | remark 5 | |
| Mechanical Pump Room | 50-90 | 10-90 | | 3 |
| Maintenance Room | 70-80 | 40-60 | | |
| Maintenance Storage | 70-80 | 40-60 | | |

General Notes:
Refer to WTT Trainer Equipment Summary and architectural for equipment cooling supply/exhaust ports and equipment and personnel loads. Include heat release from cockpit and dome air conditioning.

Remarks:
1. Non-motion versions require special ducting by the manufacturer from trench to inside the dome and cockpit.
2. 24 inch wide x 18 inch deep trench. Slope to drain to sewer or sump.
3. Fresh air ventilation
4. Cool air supply ports direct to underside of console.
5. Under access floor supply plenum. Provide perforated panels as required for airflow.

TABLE 2.2 (Continued)
TRAINER FACILITIES DATA-F/A-18 WTT

**ELECTRICAL**

| SPACE NAME | VOLTS | HZ | WIRE COUNT | PHASE | LIGHT LEVEL | ZONES | REMARKS |
|---|---|---|---|---|---|---|---|
| Device/Trainee Area | 120/208 | 60 | 4+GND | 3 | 50fc | 2 | 1,4 |
| Instructor/Operator | 120/208 | 60 | 4+GND | 3 | 50fc | 2 | 2,4 |
| Debrief Station | 120/208 | 60 | 4+GND | | | | 4 |
| Computer Room (CIG) | 120/208 | 60 | 4+GND | 3 | 50fc | 2 | 4 |
| Computer Room (digital) | 120/208 | 60 | 4+GND | 3 | 50fc | | 4,5 |
| Mechanical Pump Room. | 120/208 | 60 | 4+GND | 3 | 50fc | | 3,4 |
| Maintenance Room. | 120/208 | 60 | 4+GND | 3 | 50fc | | |
| Maintenance Storage. | 120/208 | 60 | 4+GND | | 15fc | | |

Remarks:

1. Primary zone should be on/off. Secondary zone includes Instructor Station and should have dimmer.
2. Included in Device Area zone. Locate controls for Device Area and Instructor Station near the Instructor Station. Provide aimable & dimmable lights over console work surface.
3. Device contractor will step voltage up for 480 volt requirement.
4. Conditioned power.
5. Cable trenches and vertical cable raceways required between computer rooms and training devices as noted.

General Notes:

Training Devices Connects: Device contractor supplies component wiring and conduit from device to government disconnects or panel. Main power switch in computer room.

Grounding: Building, Equipment, and Signal Grounds required.

Lightning Protection: (if required)

CAUTION: This drawing is for preliminary planning only.
Verify with NTSC and NAVAIR prior to use.

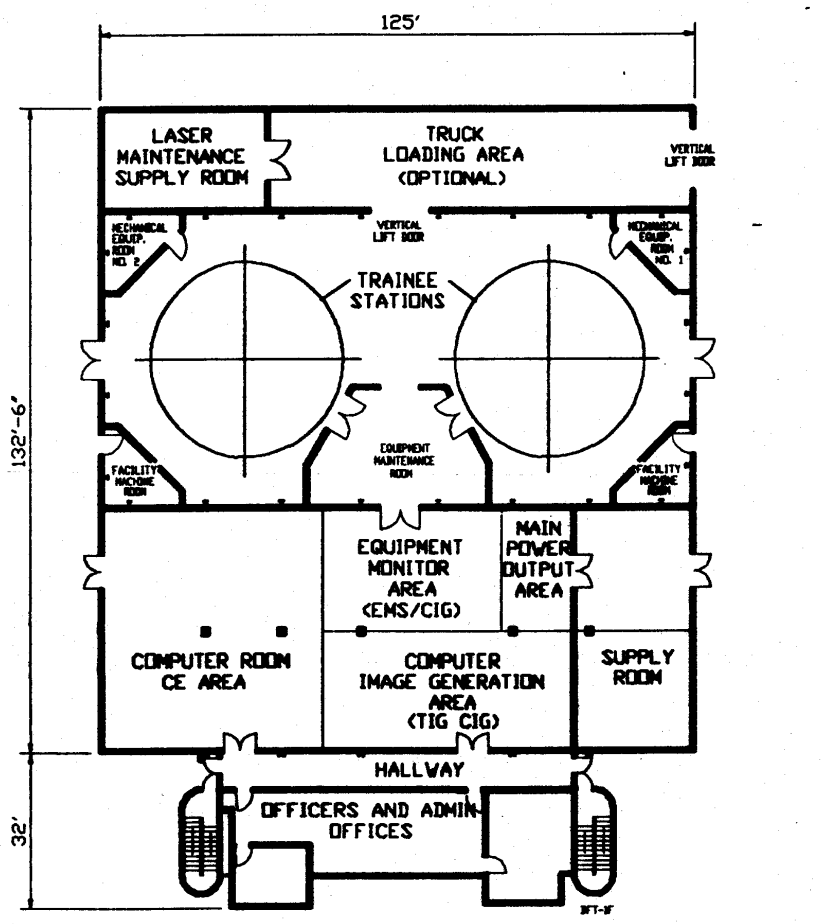


1/32" = 1'-0"  20' 0 20' 40' 60' 80' 100'

| TITLE F/A-18 SIMULATOR BUILDING FIRST FLOOR PLAN | DATE MAY 1991 | FACILITY PLATE NO. 171 35 | SHEET A1 |
|---|---|---|---|

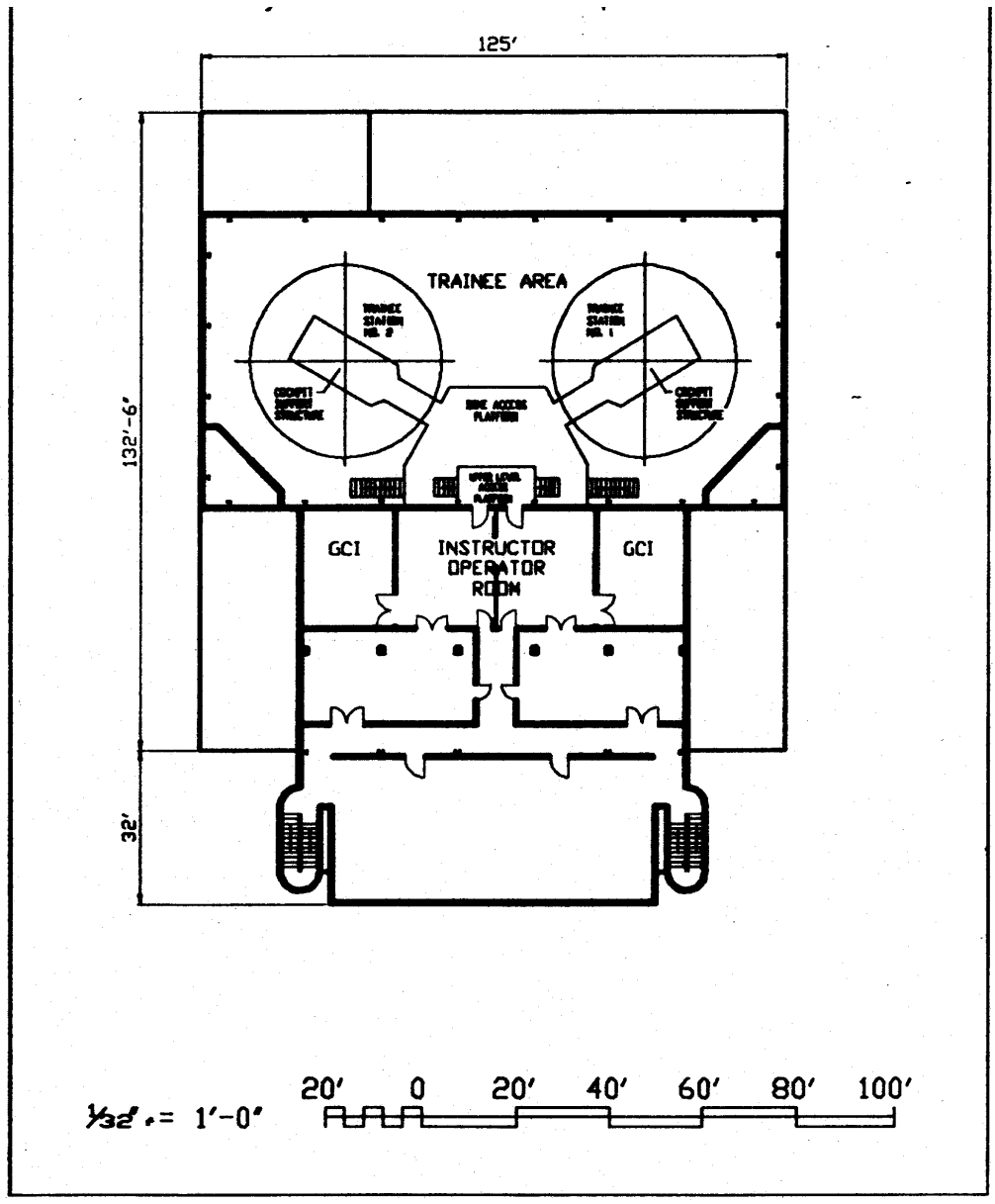


| TITLE F/A-18 SIMULATOR BUILDING SECOND FLOOR PLAN | DATE MAY 1991 | FACILITY PLATE NO. 171 35 | SHEET A2 |
|---|---|---|---|

CAUTION: This drawing is for preliminary planning only.
Verify with NTSC and NAVAIR prior to use.

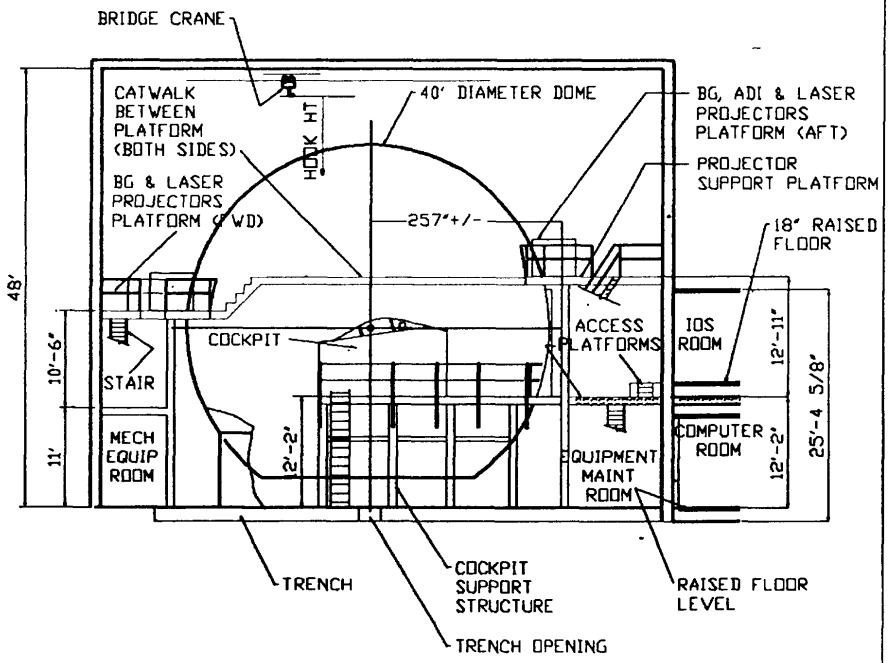


1/16" = 1'-0"  10' 0 10' 20' 30' 40' 50'

| TITLE F/A-18 (WTT) HIGH BAY SECTION | DATE MAY 1991 | FACILITY PLATE NO. 171 35 | SHEET A3 |
|---|---|---|---|

Table 2.3
TRAINER EQUIPMENT SUMMARY-F/A-18 WTT-Computer Room

**** CAUTION: This document is for preliminary planning only.****
****Verify with NAWCTSD and NAVAIR prior to use. ****

REFERENCE

Trainer Facilities Report, Kuwait Weapons Tactics Trainer (WTT), HAC REF. NO. JO268, Hughes Aircraft Company, Training and Support Systems Group, PO Box 10011, Manhattan Beach, CA 90266-8511, July 1990.

| Unit | Description | size(inches) W | D | H | weight (lb) | heat (BTU/HR) | EST KVA | cool (CFM) |
|---|---|---|---|---|---|---|---|---|
| 001 | Proc/Periph Cab | 48 | 38 | 71 | 950 | 44300 | 13.0 | 2738 |
| 012 | I/O Terminals | 20 | 20 | 20 | 120 | 5100 | 1.5 | 315 |
| 013 | I/O Terminals | 20 | 20 | 20 | 120 | 5100 | 1.5 | 315 |
| 014 | I/O Terminals | 20 | 20 | 20 | 120 | 5100 | 1.5 | 315 |
| 018 | I/O Controller (IOC) | 48 | 33 | 71 | 950 | 34000 | 10.4 | 2104 |
| 051 | Proc/Periph | 48 | 38 | 71 | 950 | 44300 | 13.0 | 2738 |
| 062 | I/0 Terminal | 20 | 20 | 20 | 120 | 5100 | 1.5 | 315 |
| 063 | I/0 Terminal | 20 | 20 | 20 | 120 | 5100 | 1.5 | 315 |
| 064 | I/0 Terminal | 20 | 20 | 20 | 120 | 5100 | 1.5 | 315 |
| 101 | Target Image Gen | 26 | 38 | 71 | 600 | 15600 | 4.6 | 963 |
| 102 | Target Image Gen | 26 | 38 | 71 | 600 | 15600 | 4.6 | 963 |
| 103 | TIG Terminal | 16 | 21 | 14 | 130 | 10200 | 3.0 | 632 |
| 130 | Radar Sys Maint | 36 | 30 | 36 | 100 | - | - | - |
| 131 | Alliant FX80 | 49 | 34 | 43 | 1200 | 35000 | 10.4 | 2160 |
| 132 | Radar Sys Disc Cab | 49 | 34 | 71 | 1500 | 22000 | 6.4 | 1358 |
| 134 | SSIG Disk Cabinet | 26 | 35 | 71 | 750 | 11000 | 3.2 | 679 |
| 135 | Encore Processor | 25 | 38 | 71 | 750 | 13600 | 4.0 | 840 |
| 136 | SSIG Maint Station | 36 | 60 | 36 | 100 | 0 | 0 | 0 |
| 136A1 | VDT (Conrac) | 16 | 21 | 14 | 85 | 6000 | 1.8 | 370 |
| 136A2 | VDT (GE) | 16 | 21 | 14 | 65 | 6000 | 1.8 | 370 |
| 136A3 | Joystick | 10 | 9 | 6 | 10 | 700 | .2 | 43 |
| 137 | Compuscene IV-A | 360 | 36 | 78 | 16410 | 200000 | 58.5 | 12345 |
| 140 | Radar Sys Maint | 36 | 30 | 36 | 100 | - | - | - |
| 141 | Alliant FX80 | 49 | 34 | 43 | 1200 | 35000 | 10.4 | 2160 |
| 142 | Radar Sys Disc Cab | 49 | 34 | 71 | 1500 | 22000 | 22.0 | 1358 |
| 144 | SSIG Disc Cabinet | 26 | 35 | 71 | 750 | 11000 | 3.2 | 679 |
| 145 | Encore Processor | 25 | 38 | 71 | 750 | 13600 | 4.0 | 840 |
| 146 | SSIG Maint Station | 36 | 60 | 36 | 100 | - | - | - |

Table 2.3 (Continued)
TRAINER EQUIPMENT SUMMARY-F/A-18 WTT-Computer Room

| Unit | Description | size(inches) W | D | H | weight (lb) | heat (BTU/HR) | EST KVA | cool (CFM) |
|---|---|---|---|---|---|---|---|---|
| 146A1 | VDT (Conrac) | 16 | 21 | 14 | 85 | 6000 | 1.8 | 370 |
| 146A2 | VDT (GE) | 16 | 21 | 14 | 65 | 6000 | 1.8 | 370 |
| 146A3 | Joystick | 10 | 9 | 6 | 10 | 700 | .2 | 43 |
| 147 | Compuscene IV-A | 360 | 36 | 78 | 16410 | 200000 | 58.5 | 12345 |
| 231 | ASIC | 75 | 30 | 76 | 1300 | 13600 | 4.0 | 843 |
| 241 | ASIC | 75 | 30 | 76 | 1300 | 13600 | 4.0 | 843 |
| 254 | EMS | 75 | 30 | 76 | 900 | 6800 | 2.0 | 421 |
| 321 | Main Input Pwr Cab | 60 | 30 | 65 | 1000 | 6800 | 2.0 | 421 |
| 323 | EMG Power Cabinet | 28 | 24 | 42 | 375 | 3400 | 1.0 | 210 |
| 324 | Power Cabinet | 32 | 30 | 60 | 1100 | 7000 | 2.0 | 432 |
| 326 | Computer Pwr Cabinet | 28 | 24 | 42 | 1000 | 3400 | 1.0 | 210 |

General Note:
1. "-" indicates unknown quantity.

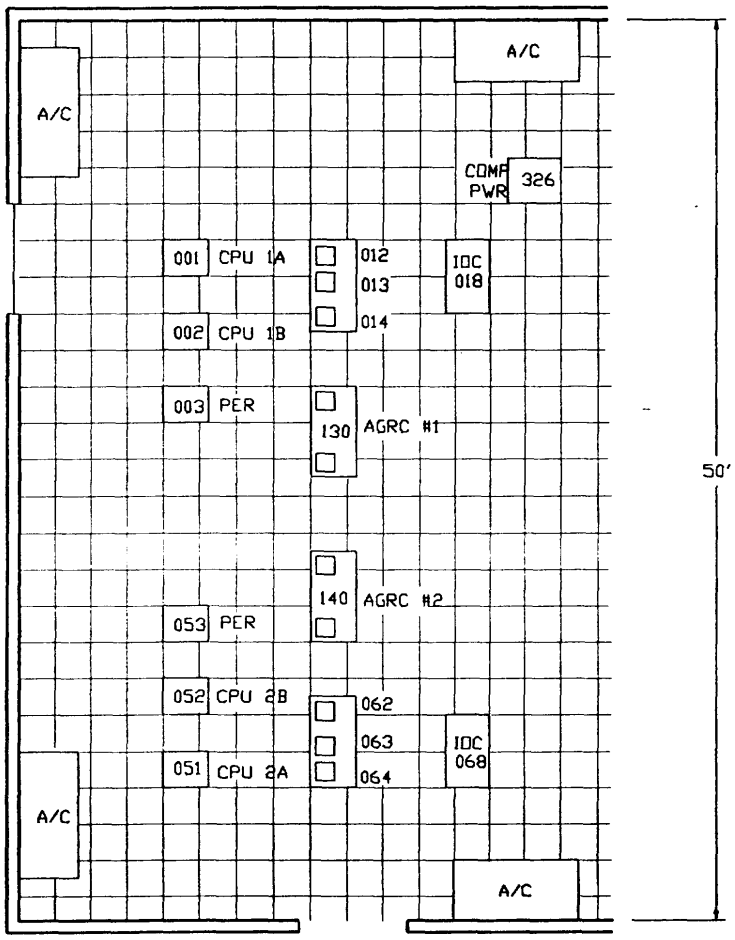


CAUTION:
This drawing is for preliminary planning only.
Verify with NTSC and NAVAIR prior to use.

1/8" = 1'-0"  5' 0 5' 10' 15' 20' 25'

| TITLE F/A-18 (WTT) COMPUTER ROOM-CE AREA | DATE MAY 1991 | FACILITY PLATE NO. 171 35 | SHEET A4 |
|---|---|---|---|

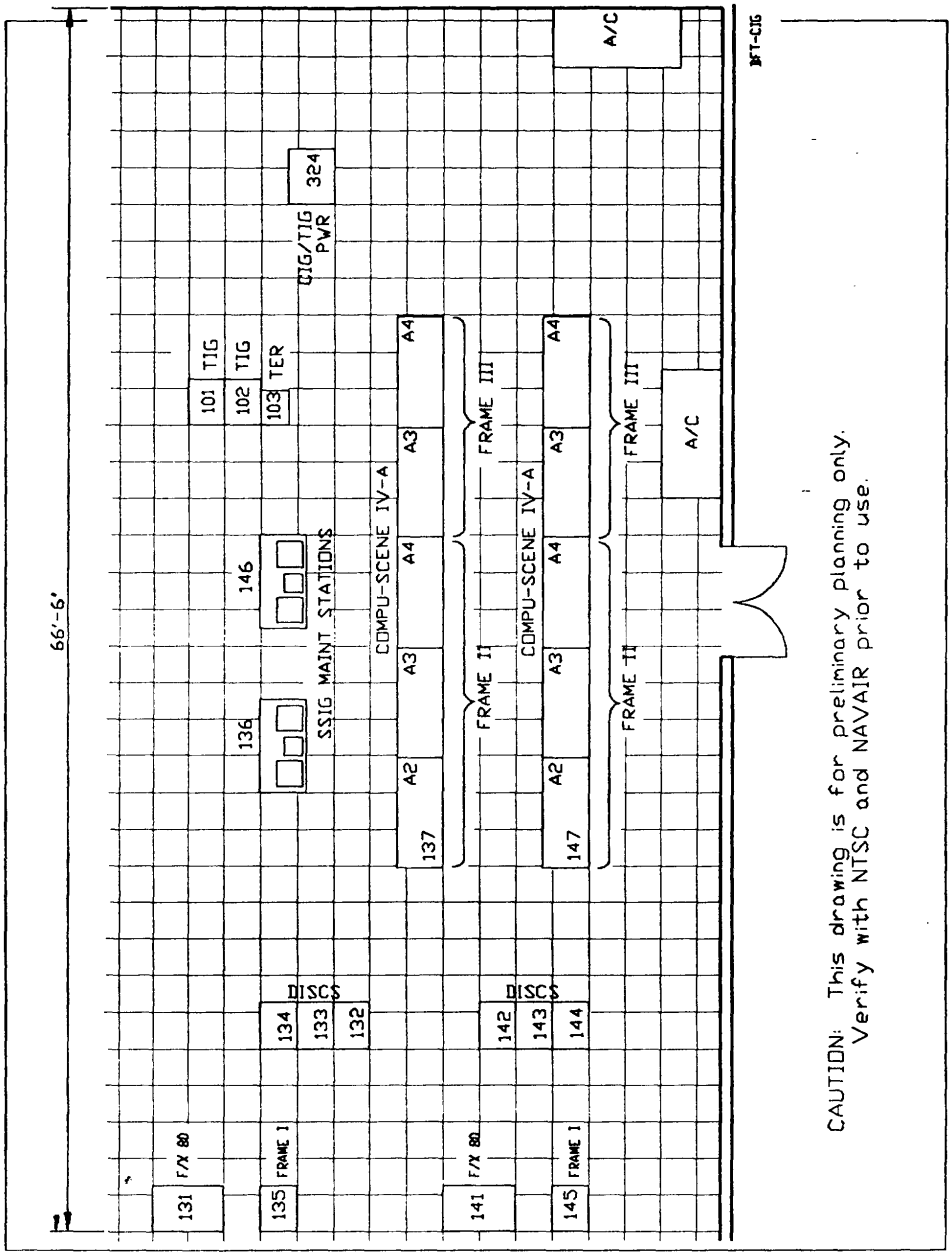


| TITLE | DATE | FACILITY PLATE NO. | SHEET |
|---|---|---|---|
| F/A-18 (WTT) COMPUTER ROOM-TIG/CIG | MAY 1991 | 171 35 | A5 |

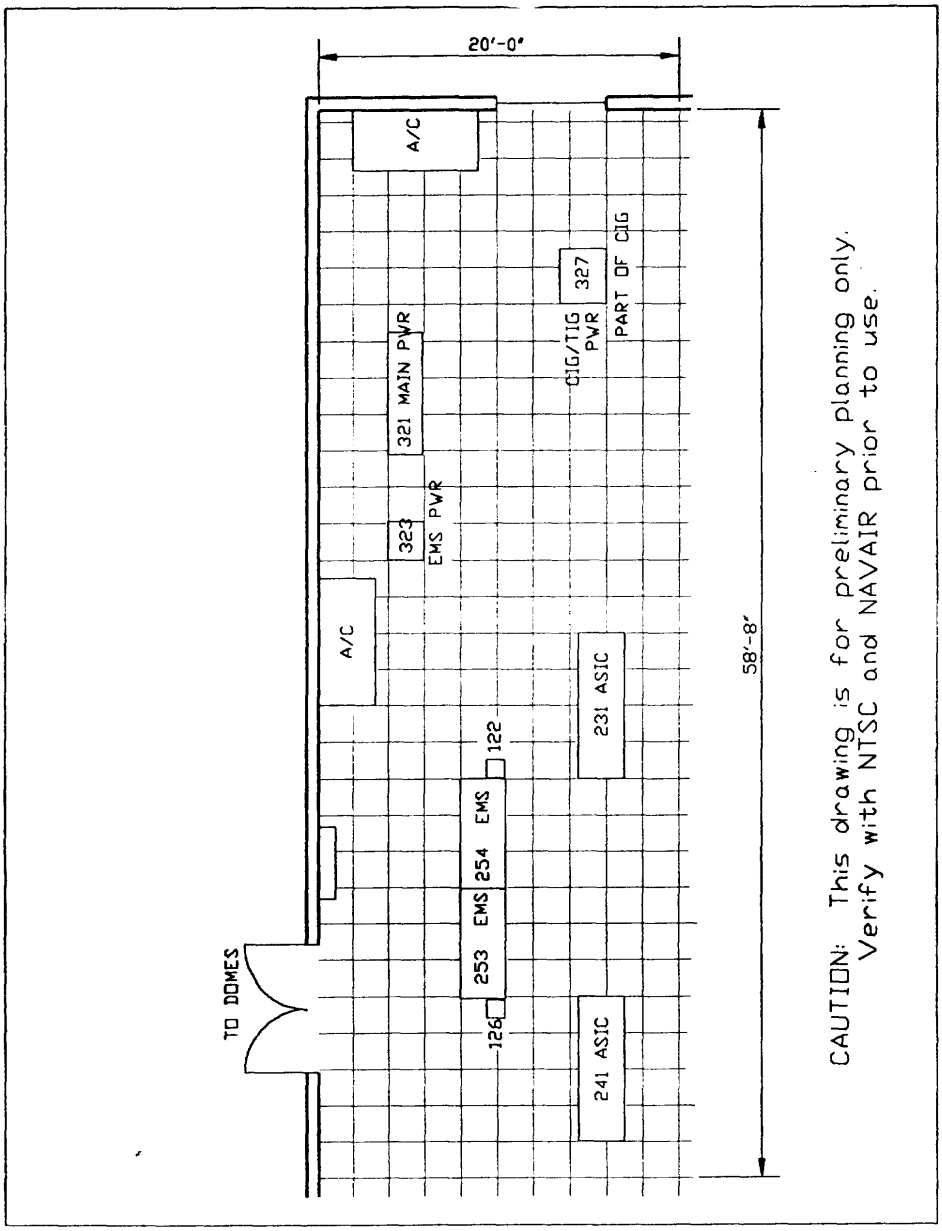


| TITLE F/A-18 (WTT) COMPUTER ROOM-EMS/CIG | DATE MAY 1991 | FACILITY PLATE NO. 171 35 | SHEET A6 |
|---|---|---|---|

TABLE 2.4
TRAINER FACILITIES DATA-F/A-18 OFT

Motion device with visual system
Room dimensions shown are minimums unless noted.
Model facility plates may show site specific larger dimensions.

**** CAUTION: This document is for preliminary planning only.****
****Verify with NAWCTSD and NAVAIR prior to use. ****

**REFERENCE DOCUMENTS**

Trainer Facilities Report, Device 2F132 F/A-18 OFT #7, Rev. A, March 1988, Honeywell, 13775 McLearen Road, Herndon, Virginia 22071

**ARCHITECTURAL**

| SPACE NAME | MIN DIMENSIONS (LxWxH) | MAX NOISE LEVEL | ACCESS FLOOR | REMARKS |
|---|---|---|---|---|
| Device/Trainee Area. 1 | **17'x 31'x 18'** | 55Db(A) | | |
| Instructor/Operator | **17'x 31'x 11.5'** | 55Db(A) | 10" h | 2,4 |
| Computer Room | **29'x 31'x 9'** | 65Db(A) | 10" h | 3,4 |
| Utility Area 3 | **22'x 6'x 8'** | remark 5 | | |

General Notes:
Above requirements are WTT specific. See other data for administrative & support spaces.

Remarks:
1. Special door @ 6'-0"w x 8'-6"h
2. Special door @ 4'-0"w x 8'-0"h
3. Special door @ 4'-0"w x 7'-0"h
4. Flooring to be IAW MIL F 29046 (TD) and electrostatic protected.
5. Equipment produces noise level of 95 Db.

TABLE 2.4 (Continued)
TRAINER FACILITIES DATA-F/A-18 OFT

**STRUCTURAL**

Device components transport method: Cockpit by casters and lifted by lifting fixtures or fork lift truck.
Special equipment: Overhead track and hoist with 500 pound capacity.
Maximum concentrated computer access floor load: 47.8 pounds per square inch.
Max column floor pad load from trainee station: 18.0 pounds per square inch.

**MECHANICAL**

| SPACE NAME | TEMPERATURE DEGREES(f) | HUMIDITY PERCENT | EQUIP HEAT (BTU/HR) |
|---|---|---|---|
| Device/Trainee Area | 60-80 | 40-60 | 103,400 |
| Instructor/Operator | 60-80 | 40-60 | 9600 |
| Computer Room | 60-80 | 40-60 | 111,390 |
| Utility Area | 40-100 | 50-80 | 51,360 |

**ELECTRICAL**

| SPACE NAME | VOLTS | HZ | WIRE COUNT | PHASE | LIGHT LEVEL |
|---|---|---|---|---|---|
| Device/Trainee Area | 120 | 60 | 2+GND | | 50fc |
| Instructor/Operator | 120 | 60 | 2+GND | | 75fc |
| Computer Room | 120/208 | 60 | 4+GND | 3 | 75fc |
| Utility Area | 480Y/277 | 60 | 4+GND | 3 | 50fc |

General note: Electrical power furnished by the facility should be:
160 AMP, 120/208 VAC, three phase, 60 Hz, four wire plus ground
55 AMP, 480Y/277 VAC, three phase, 60 Hz, four wire plus ground

Grounding: Earth Ground required.

Table 2.5
TRAINER EQUIPMENT SUMMARY-F/A-18 OFT-DEVICE 2F132

**** CAUTION: This document is for preliminary planning only.****
****Verify with NAWCTSD and NAVAIR prior to use. ****

**REFERENCE**

Operation and Maintenance Instructions Overall Trainer
F/A-18 Operational Flight Trainer, Device 2F132, 6930-LL-C00-5211
Hughes Simulation System, Inc., Herndon, Virginia 22071, 2 October 1989

| Unit Description | size (inches) W | D | H | weight (lb) |
|---|---|---|---|---|
| 1 Trainee Station | 44 | 146 | 58 | 2000 |
| 2 Instructor Console | 132 | 47 | 56 | 600 |
| 3 Visual/Monitor Cons | 41 | 59 | 93 | 900 |
| 4 Input/Output Unit | 22 | 28 | 79 | 500 |
| 5 Input/Output Unit | 22 | 28 | 79 | 500 |
| 6 (not assigned) | | | | |
| 7 Aural/ICS | 22 | 28 | 79 | 400 |
| 8 CRT Controller | 22 | 28 | 79 | 500 |
| 9 Mission Computer | 22 | 28 | 79 | 400 |
| 10 (not assigned) | | | | |
| 11 Flight Control Comp | 22 | 33 | 79 | 400 |
| 12 (not assigned) | | | | |
| 13 AC Power Dist | 44 | 28 | 79 | 1000 |
| 14 Digital Computer | 69 | 35 | 56 | 1200 |
| 15-17 (not assigned) | | | | |
| 18 Sing Prt Disc Drv | 22 | 36 | 36 | 567 |
| 19 Sing Prt Disc Drv | 22 | 36 | 36 | 567 |
| 20 Printer/Plotter | 24 | 24 | 37 | 120 |
| 21 A/N CRT | 16 | 19 | 14 | 25 |
| 22-25 (not assigned) | | | | |
| 26 Mag Tape/Disc Drive | 19 | 13 | 25 | 170 |
| 27 Visual Image Gen | 22 | 31 | 79 | 700 |
| 28 Visual Image Proc | 22 | 31 | 79 | 500 |
| 29 Visual Data Terminal | 19 | 26 | 33 | 200 |
| 31 Hydraulic Power Unit | 52 | 38 | 50 | 900 |
| 32 Pneumatic Power Unit | 66 | 28 | 55 | 900 |

Table 2.5 (Continued)
TRAINER EQUIPMENT SUMMARY-F/A-18 OFT-DEVICE 2F132

| Unit Description | size (inches) W | D | H | weight (lb) |
|---|---|---|---|---|
| 33 Air Dryer | 18 | 12 | 14 | 75 |
| 34 400 Hz Freq Conv | 28 | 21 | 28 | 300 |
| 35 Cockpit Pwr Sup Assy | 22 | 27 | 41 | 350 |
| 36 Cockpit Air Cond | 38 | 64 | 38 | 900 |
| 37 Cockpit Serv Platfrm | 168 | 240 | 54 | 4000 |
| 38 Motion Control Assy | 58 | 36 | 38 | 300 |
| 39 Visual Display Unit | 40 | 26 | 33 | 400 |
| 40 Visual Display Unit | 40 | 26 | 33 | 400 |
| 41 Visual Display Unit | 40 | 26 | 33 | 400 |
| 42 Motion Seat Assembly | 27 | 35 | 110 | 500 |
| 43 MICS Junction Box | 21 | 10 | 8 | 15 |
| 44 MICS Station | 18 | 18 | 43 | 25 |
| 45 MICS Station | 18 | 18 | 43 | 25 |
| 46 MICS Station | 18 | 18 | 43 | 25 |
| 47 MICS Station | 18 | 18 | 43 | 25 |
| 48 MICS Station | 18 | 18 | 43 | 25 |
| 49 MICS Station | 18 | 18 | 43 | 25 |
| 50 MICS Station | 18 | 18 | 43 | 25 |
| 51 MICS Station | 18 | 18 | 43 | 25 |

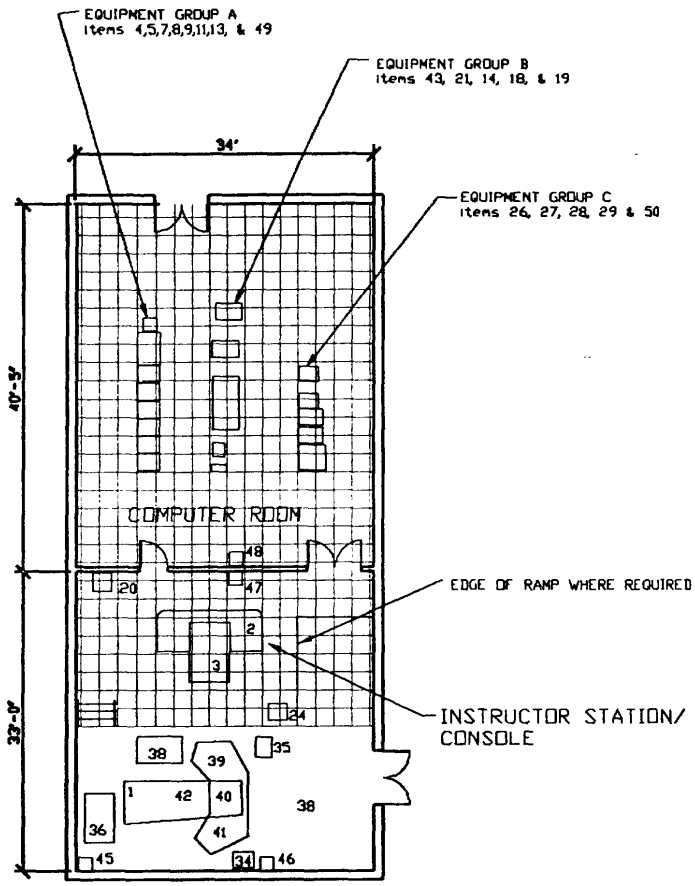


CAUTION: This drawing is for preliminary planning only.
Verify with NTSC and NAVAIR prior to use.

1/16" = 1'-0"  10' 0 10' 20' 30' 40' 50'

| TITLE F/A-18 (OFT) FLOOR PLAN | DATE DEC 1992 | FACILITY PLATE NO. 171 35 | SHEET A7 |
|---|---|---|---|

Table 2.6
TRAINER FACILITIES DATA-F/A-18 PTT

Non-motion devices
Room dimensions shown are minimums unless noted.
Model facility plates may show site specific larger dimensions.

**** CAUTION: This document is for preliminary planning only.****
****Verify with NAWCTSD and NAVAIR prior to use. ****

**REFERENCE DOCUMENTS**

General Requirements for Aviation Training Facilities, NAWCTSD Orlando
TRAINER FACILITY INFORMATION, NAWCTSD Orlando
Trainer Facilities Report for F/A-18 Part Task Trainer, HI 84-33/7002, 21 June 1984, Gould Inc., Systems and Simulation Division, 50 Marcus Drive, Mellville, NY 11747

**ARCHITECTURAL**

| SPACE NAME | MIN DIMENSIONS (LxWxH) | OCCUPANT COUNT | MAX NOISE LEVEL | ACCESS FLOOR | REMARKS |
|---|---|---|---|---|---|
| Device/Trainee Area. | **30'x 22'x 8'** | 6 | 55Db(A) | 12" h | 1 & 2 |
| Computer Area | | | | | 3 |
| Maintenance Area | | | | | 3 |

General Notes:
Above requirements are PTT specific. See other data for administrative & support spaces. Equipment noise is indicated on the Trainer Equipment Summary.

Remarks:
1. 10' ceiling height preferred in this size room.
2. 72"w x 84"h hinged door required for equipment access.
3. Space is included in Device/Trainee Area.

**STRUCTURAL**

Device transport method: 4 casters at 2 square inches each load bearing surface.
Vibration Control: None required.
Permanent installation pads: 4 at 2.76 square inches each

Table 2.6 (Continued)
TRAINER FACILITIES DATA-F/A-18 PTT

**MECHANICAL**

| SPACE NAME | TEMPERATURE DEGREES(f) | HUMIDITY PERCENT |
|---|---|---|
| Device/Trainee Area | 50-98.6 | 80 (max) |
| Computer Room Area | 50-98.6 | 80 (max) |
| Maintenance Area | 70-80 | 40-60 |

**ELECTRICAL**

| SPACE NAME | VOLTS | HZ | AMPS | WIRE COUNT | PHASE | LIGHT LEVEL | ZONE | REMARKS |
|---|---|---|---|---|---|---|---|---|
| Device/Trainee Area | 120/208 | 60 | 75 | 4+GND | 3 | 50fc | 2 | 1,2,3 |
| Computer Area | (see TFR) | | | | | | | 3 |
| Maintenance Area | 120 | 60 | 20 | 2+GND | 3 | 70fc | 1 | |

Remarks:
1. 100 ampere service recommended for trainers.
2. Dimming control or fluorescent tube switching recommended.
3. Provide utility outlets at every other cabinet and at each trainee station for service lighting.

General Notes:

Power Regulation & Filtering: Provide three power line interference suppression filters.

Training Devices Connects: Provide 75 ampere master switch circuit breaker. Device contractor supplies component wiring and conduit from device to government disconnects or panel.

Grounding: DC power supply ground and digital and analog signal grounds required. Provide isolated system tied to single common point.

Lightning Protection: (if required)

Bonding: Conform to MIL-STD-1310.

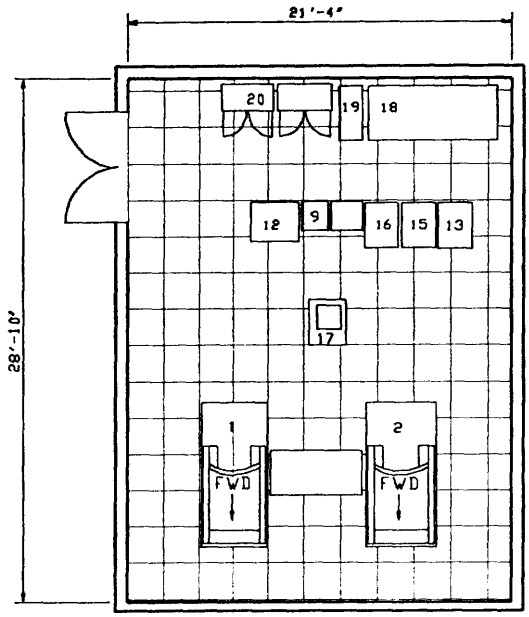


| Unit Description | size (inches) W | D | H | weight (lbs) | heat (BTU/HR) | cooling intake | notes |
|---|---|---|---|---|---|---|---|
| 1 Cockpit #1 | 46 | 96 | 52 | 774 | | | |
| 2 Cockpit #2 | 46 | 96 | 52 | 774 | | | |
| 3 Table | 60 | 60 | 30 | | | | |
| 4 Portable Contr Term #1 | 4 | 7 | 2 | .75 | | | |
| 5 Portable Contr Term #2 | 4 | 7 | 2 | .75 | | | note 1 |
| 6 CPU | 25 | 33 | 71 | 750 | | | |
| 7 Mag Tape Unit | 19 | 17 | 24 | 85 | | | |
| 8 10 Meg Disc | | | | 6 | | | |
| a. Formatter | 19 | 20 | 3 | 25 | | | note 1 |
| b. Drive | 19 | 29 | 9 | 130 | | | note 1 |
| 9 Mag Tape/Disc Cab | 25 | 33 | 71 | 234 | | | |
| 10 Battery Backup Unit | 19 | 28 | 12 | 200 | | | note 1 |
| 11 CPU CRT/Keyboard Term | 15 | | 15 | 25 | | | note 1 |
| 12 Line Printer | 33 | 26 | 45 | 370 | | | |
| 13 AC Power Dist & Contr | 22 | 30 | 70 | 400 | | | |
| 14 400 HZ Converter | 14 | 15 | 12 | 165 | | | note 1 |
| 15 RTI Unit & Cabinet | 22 | 30 | 78 | 300 | | | |
| 16 Mission Computer Cab | 22 | 30 | 78 | 520 | | | |
| 17 Comp Operator's Table | 60 | 30 | 30 | 80 | | | |
| 18 Work Bench | 84 | 36 | 30 | 147 | | | |
| 19 File Cabinet | 15 | 26 | 52 | 143 | | | |
| 20 Storage Cabinets | 36 | 18 | 72 | 238 | | | |

CAUTION: This drawing is for preliminary planning only. Verify with NTSC and NAVAIR prior to use.

REFERENCE:
Trainer Facilities Report for F/A-18 Part Task Trainer, Device 15C13, HI 84-33/7002, Gould Inc., Systems and Simulation Division, Melville, NY 11747, 21 June 1984.

NOTE 1: Sizes are rounded to nearest foot.

| TITLE F/A-18 (PTT) FLOOR PLAN AND EQUIPMENT SUMMARY | DATE JAN 1992 | FACILITY PLATE NO. 171 35 | SHEET A8 |
|---|---|---|---|

## Section 3: AVIATION MAINTENANCE TRAINING FACILITIES

3.1 Functional Requirements. A Naval Air Maintenance Training Group Detachment (NAMTRAGRUDET) is an organizational subunit of the Naval Air Maintenance Training Group composed of an officer-in-charge, assistant-officer-in-charge, and experienced enlisted Navy and Marine maintenance instructors. NAMTRAGRUDETs are established and positioned to provide on-station academic classroom and laboratory type technical training. They contain maintenance trainers, training aids, curricula, lesson guides, technical library, standard and special tools, supporting test equipment, and such other training material as may be required to effectively teach the approved courses of instruction. NAMTRAGRUDETs are normally co-located at the station (home port) of the specific model aircraft they teach to facilitate on-site academic classroom and laboratory training. They typically provide technical training for officer and enlisted personnel in the operation, maintenance, and repair of the particular aircraft.

Maintenance trainers may evolve into larger "composite trainers" which will require larger rooms. Address the potential for future expansion and reconfiguration of spaces at the programmatic phase.

3.2 Facility Design. Flexibility is a critical need. Educational philosophies and training devices and aids are subject to change as new techniques are accepted. Identify future growth areas and accommodate through user input and careful monitoring of program directions.

A primary concern in the design of Aviation Maintenance Training Facilities is the access and efficient circulation patterns of training equipment for use in the lab/classrooms. Ensure adequate accessibility for servicing and removal/replacement of equipment.

3.2.1 Site Planning. Base the siting on a thorough investigation and analysis of the existing physical conditions of the land and the functional requirements of the project. Place structure(s) and paved areas to minimize disruption to any existing utilities and/or future expansion. See mechanical sections for requirements on utility entry points into the mechanical room. Accommodate future expansion plans.

The site must provide adequate truck turnaround and maneuvering space for the installation and removal of training equipment. The exterior access drives required for the installation and removal of equipment from the facility will be used for that purpose very infrequently. When not being used for equipment installation and removal, the maneuvering space can be used for other purposes such as extra parking. Consult the using activity and base for parking needs.

The loading area may have requirements for elevating heavy equipment up to truck bed height. A freestanding detached ramp or dock lift is an alternative to a raised loading dock or depressed ramp. A raised dock requires a high finish floor level which may hamper day to day operations and a depressed ramp is subject to standing water and debris.

3.2.2 Architectural. Place emphasis on simple, straightforward functional solutions to both interior and exterior design and detailing. Seismic design may require limits on the height of structures and special

design configurations. Follow the guidelines given in MIL-HDBK-1001/1, Basic Architectural Requirements and Design Considerations. Group facility spaces requiring high ceilings to minimize changes in the roof levels. Group classrooms utilizing oversized equipment to minimize need for lengthy extra wide access corridors to the exterior. Aviation Maintenance Training facilities are often sited near flight lines where sound transmission control is essential.

3.2.2.1 Adjacency. Some spaces require adjacency for the efficient and correct operation of the equipment installed therein while others provide adjacency for the convenience of the users of the facility. See Figure 2. For instance, a training device with hydraulic systems requires a pump room adjacent to the trainer room, whereas Briefing/Debriefing rooms are located adjacent to the respective trainer for convenience of instructor and trainee.

Place high bay areas of the same or nearly equal height adjacent to each other and combine into one level for simplification of roofing and structural systems and resultant cost savings.

3.2.2.2 Circulation. Circulation patterns and intensity vary among aviation training facility types. Varying numbers of administrative personnel, contract personnel, trainees, and instructors contribute to the pedestrian traffic load.

Maintenance training facilities typically support heavy trainee pedestrian traffic. Separate trainee circulation patterns from instructors where possible. Arrange spaces to minimize circulation and to provide the most direct access. Widen corridors used for display, gathering areas, and casual CRT viewing. Provide a security checkpoint for identification of all entrants to the building.

3.2.2.3 Functional Priorities. The most important sections of the facility are those that are directly required to perform the training mission. Other portions of the facility are secondary. Space groupings in order of importance are:

a) Training rooms (e.g., classrooms, trainer rooms, etc.) required to perform the training.

b) Direct support spaces, such as computer rooms, storage rooms for classroom materials, mechanical equipment rooms, instructors offices, etc., without which the training would be degraded or impossible to perform.

c) Indirect support spaces, such as toilets, lounges and administrative offices, without which training can be accomplished, but at a cost in the efficiency of the training organization.

3.2.2.4 Spaces and Characteristics

Administrative. Includes secretarial functions, supervisors, and security personnel. An open office partition plan in administrative areas should be used for economy of space and open intra-office communications. An acceptable path of travel must be established per NFPA 101 for fire exiting. Provide sound absorbing materials as required in office areas. Refer to MIL-HDBK-1034, Administrative Facilities, for additional data.

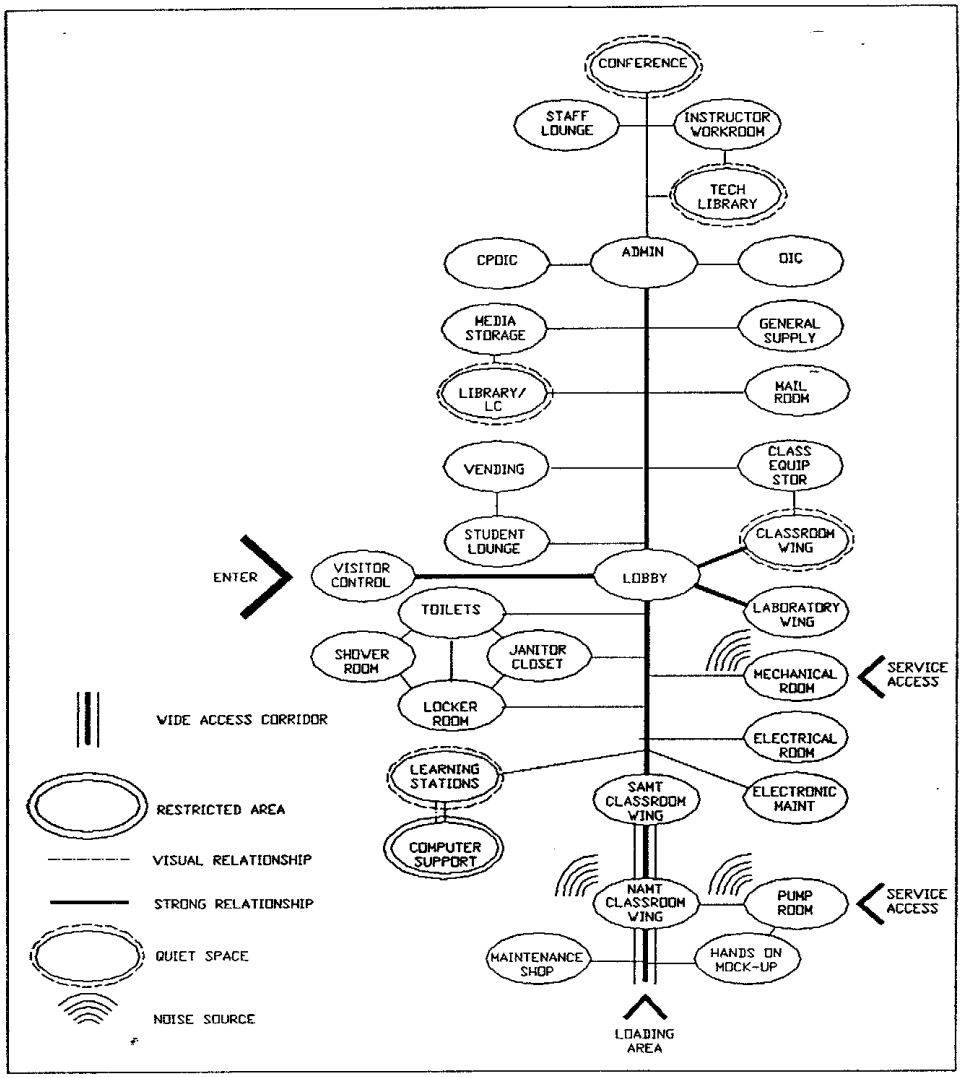


FIGURE 2
MAINTENANCE TRAINING BUBBLE DIAGRAM

Armament Systems Trainer. Simulates armament systems. These are simulated for normal testing and troubleshooting as specified by the manuals. the students may be trained in the removal and installation procedures for the pylons, ejector rack, practice multiple bomb rack, and missile launchers.

Avionics Trainer. Provides systems maintenance training on all avionics and related systems. The instructor may induce malfunctions such as broken wiring, bad components and defective switches or antennas with all appropriate indications occurring.

Berthing Room. A one-person overnight watch may be required.

Chief Petty Officer-in-Charge (CPOIC). Reports directly to and assists the Officer in Charge.

Conference Room. Provide porcelain "chalkboard," bulletin board, and pull down projection screen. Accommodate flexibility in occupancy counts and table arrangements. Address all types of applicable space utilization to ascertain needs. Consider providing the capability of subdividing the room(s) with accordion folding partitions having a STC rating not less than 40 and provide maximum sound absorption in finishes. Provide two means of egress with door swings in the direction of exit travel for rooms exceeding an occupancy of 50 people.

Corridors. Consider trainee occupancy loads and exiting, heavy circulation points, such as stairways and vending areas, and the size of equipment to be transported to and from classrooms allowing for maneuvering equipment through doorways. Base minimum width dimensions on building occupancy, complying with NFPA 101 and minimum width of equipment maneuvering, whichever is greater. Where lockers are not provided, provide coat and foul weather gear hanging areas near entrance in recessed alcoves or in student lounges where lockers are not provided.

Electrical Room. This space contains the facility main distribution panel, subdistribution panels and step down transformers required for the operation of the facility. Frequency converter and telephone panelboard may be included. Do not combine the Electrical Room with the Mechanical Room.

Electrical Systems Trainer. Simulates the aircraft electrical system, lighting, AC/DC power generating and bus logic.

Electronic Maintenance and Repair. Minor repair of the trainer components is undertaken here by the device contractor. Provide workbenches for minor repair. Include these on the Collateral Equipment List. Consider peg mounting boards on the wall for hanging cables. The standard Navy electronic workbench, type NEB-2 with PS-1A 24VDC electric-converter is recommended for electronic maintenance shops. Verify if 400 Hz and other power characteristics are required. Workbenches may be ordered through the Aviation Supply Office, Philadelphia, PA. Typical installation consists of three 24-inch wide modules with back panels for an assembled size of 72 inches wide x 33-7/8 inches deep x 60-1/4 inches high. Suggested components follow:

3 ea-FSN: 1N6625-851-2158 Back Panel and Shelf Assembly
3 ea-FSN: 1N6110-839-8026 Electrical Distribution Box
2 ea-FSN: 1N6625-851-2157 Base Assembly
2 ea-FSN: 1N6625-851-2156 Cabinet Assembly
1 ea-FSN: 1N6625-851-2159 Table Assembly
1 ea-FSN: 1HM613000-4108488TM PS-1A electric-converter

Fuel Systems Trainer. Demonstrates the operation, fault isolation, adjustment, and testing of fuel systems.

General Academic Classrooms. Seating arrangement is the most important factor in determining the size and shape of a classroom. Accommodate any special requirements for static and operative displays and team teaching, such as small, medium, and/or large class seating arrangement flexibility within the same classroom boundaries. The length required for the front chalkboard can also affect the shape and orientation of the room. Refer to Timesaver Standards for Building Types, 2nd Edition, (McGraw-Hill Book Company) for detailed data on seating arrangements. Optimize the classroom sizes and shapes for flexibility and enhancement of instruction. Avoid "pie shape" and other configurations which limit alternate seating arrangements. Determine seating types and audiovisual characteristics before finalizing configuration. Fixed seating tiers can decrease flexibility. Consider fixed seating and tiers only in facilities with a minimum of 3 classrooms. Use of maps and fold out materials by trainees may require seating at tables. Since classrooms are repetitive spaces, intense effort is required to assure quality in each duplicated space. Consider the following major factors for design of classrooms:

1) Seating types and arrangements and writing surfaces

2) Space and furnishings for the lecturer.

3) The use of wall space, including teaching aids and windows.

4) Projection and TV facilities.

5) Coat racks, storage and other conveniences.

6) Acoustics and lighting

7) Heating, ventilating and air conditioning

8) Aesthetic considerations

TV monitors and special projection systems in addition to traditional chalkboards or porcelain boards may be used. Verify and document the requirement for rear screen projection before accommodating in the design. Refer to audiovisual requirements for projection systems.

Aviation training facilities typically use training devices requiring mechanical systems support. Consequently, classrooms are often exposed to a variety of support equipment noises in addition to HVAC unit noise which can distract from instruction. Provide sound baffles, absorbent materials at noise sources, and locate mechanical units remote from classrooms. Avoid sound masking in classrooms. Acoustic design level for

classrooms should be RC-30 with 50 STC (minimum) walls. Provide acoustically rated accordion folding panel partitions with integral door where flexibility is desirable for subdividing classrooms. Extend details above finished ceiling to assure integrity of specified STC in the interstitial space.

Porcelain marker boards are preferred over "chalkboards." Include a display rail with clip fasteners. Wall perimeter tack strips should be provided for graphic display, such as maps and charts. Non-obtrusive observation sidelights are required at classroom entries. Limit storage areas for audiovisual equipment to those items dedicated to each classroom.

Provide small portable platform units in lieu of permanent raised platforms (plus or minus, 8 inches high) for classroom lectern areas utilizing demonstration techniques and in rooms with over 5 seating rows. Permanent platforms can severely limit future rearrangements in seating and subdivisions. Allow a generous width for the instructor to transverse the platform for the full length of the chalkboard. Centralize other storage.

General Supply Storeroom. Provide double doors in lieu of overhead door to loading area for better control of air infiltration. Verify if dutch door or issue counter is required by the user.

Dedicated Classroom. One or more dedicated classrooms may be required for classified teaching material. Provide adequate STC ratings for walls in accordance with levels of security.

Flight Control Systems Trainer. A full size aircraft mockup which is used to train future aircraft structural and hydraulic mechanics and electricians in the moving systems which control the aircraft in flight. It uses real and like-real aircraft components in areas of training where intricate physical relationships need to be demonstrated and fine mechanical skills are to be practiced.

Hands-On Mock-Ups. The major determinant for room volume is typically the training device and how it is demonstrated and operated. Allow for a maximum of six students except where directed otherwise. Where high bay spaces are required, use mezzanine space for storage or observation area. Accommodate any clearances and other requirements for rolling service platforms. Avoid obstructing moving parts with utility feeds. Exposed structure provides ready access to utilities for service. Acoustic absorbing materials will be required in spaces where device noise such as hydraulic pump support equipment is a nuisance to instruction and in other spaces with noise level above RC-30, and/or above levels of ear safety. Direct application of acoustical material to the underside of deck instead of using suspended acoustical ceiling tiles allows more ease of access and visibility to service utilities.

Instructor and Staff Lounge. Provide kitchen alcove, visually hidden from lounge with dishwasher, microwave oven, and small upright refrigerator. The seating area can double as conference and as an instructor work area if arranged so that kitchen users do not have to intrude.

Instructor Work Room. Requirements can vary from work stations for supervisors only to work stations for all instructors. Separate dedicated instructor work space from trainee gathering areas and trainee pedestrian

traffic. Locate near or contiguous with the Library/Learning Center for access to resource materials.

Provide large, clear areas for instructor work space to permit flexibility in reapportionment of spaces. This area should be designed around a modular scheme for the greatest possible flexibility in arrangement. When individual offices are required within general areas, they should be enclosed by lightweight, movable partitions. Systems or modular furniture provides privacy and acoustical control in an open environment and allows great flexibility for changing instructor work space. PC work stations may be used here on a network. Design power, telephone, and data distribution wiring systems in this area to allow for frequent changes.

Janitor Closet. Provide adjustable shelving and storage space for cleaning equipment and supplies, mop rack, and a deep sink or mop receptor on each floor.

Lab/Classroom. Academic classroom areas in the same space with the trainer device allows instructors to relate directly to devices under study during lectures. An unusually low trainee/teacher ratio such as 4:1 can be expected due to safety concerns related to devices. A second instructor in the class is considered a safety observer. Provide space for 2 trainees per table. Tables are preferred to individual desks due to the array of manuals and fold-out data used in the classroom. Normal class size is 8. Up to 10 trainees per class may be accommodated under extreme conditions.

Laboratory. Trainees are instructed here in electronics and hydraulic testing. Lab hoods may be required for soldering.

Landing Gear Trainer. Allows aircraft hydraulic and pneumatic mechanics, aircraft electrical systems technicians and aircraft structures mechanics to receive organizational level maintenance training related to the landing gear components for which they are responsible. They can demonstrate both normal and abnormal operation of the landing gear and subsystems, location of landing gear components and troubleshooting techniques for isolating faults.

Learning Stations. The learning stations are primarily computer aided instruction utilizing student carrels. The instruction proceeds at the students' own pace and ability to learn the material.

Learning Station Computer Support. Most computer aided instruction systems now in use require a central processor which is usually located adjacent to the learning stations area. Direct and dedicated support of learning stations is provided. Provide access floor where required. Future technology advancements may replace the central processor with a desktop computer unit located in the learning stations area.

Up to eight classified file safes may be used. Provide security measures as required by the user and the base security officer in conjunction with NCIS.

Library/Learning Center. This space provides information and resources. Larger centers require control of equipment and materials with a service counter and work space which will provide orderly issue and receipt

as well as inventory control and repair. Audiovisual or other equipment repair may be required.

In addition to books, the learning center may contain records, tapes, closed circuit TV facilities, film, cameras, VCRs and projection equipment. Larger centers may need separate stack and reading areas. Provide storage for Navy publications and rate-training manuals. Accommodate a classified file safe where required by the user. Acoustic controlling materials are necessary to ensure a quiet environment.

Provide for computerized Electronic Information Delivery System (EIDS) and carrels if required by the user. Carrels where needed must be sized to accommodate the EIDS. The EIDS may require a separate room for the host computer depending on the system and may be restricted to authorized personnel only.

Lobby. Locate for direct visual supervision of central control. Provide wall area for a bulletin board and building directory. Accommodate any memorabilia provided by the user. Include a recessed scuff area at the entry point for control of debris from foot traffic. A vestibule is recommended for energy conservation.

Locker Room. Provide permanent built-in curb mounted lockers except where future flexibility is required. Provide adequate lockers and clothes hooks for trainee occupancy load and adequate garment changing area with wall mounted number 8 finish stainless steel mirror. Minimize blind spots and/or visual obstructions except as required for privacy.

Mail Room. Locate off the corridor and contiguous to the administrative area for use by the staff. Provide mailboxes with two sided access. Design area to prevent queues of personnel from obstructing corridor passage.

Maintenance Shop. Some facilities may require intermediate ("I") level maintenance. Provide appropriate workbenches for minor miscellaneous repair. Include these on the Collateral Equipment List. Carbon dioxide containers for "I" level maintenance are preferred at a protected outdoor location.

Media Storage Room. Provisions for storage and retrieval of each type media must be provided. In multifloor facilities, locate an additional media storage room on each floor. Include centralized storage as needed for slides, film, microfilm, filmstrips, video tapes, audio tapes, records, computer discs and other storage media, maps and charts, projection equipment, and audio equipment. Refer to MIL-HDBK-1008C for fire protection requirements for magnetic tape and film storage. Adjustable shelving is required. Verify with the user if a centralized VCR control panel area is required. Provide issue window, dutch door, or counter where required for customer service.

Mechanical Room. This space normally contains the heating, ventilating and air conditioning (HVAC) equipment as well as the sprinkler valves and piping. Avoid locating rooms with HVAC equipment on upper levels where sound can reverberate through structural systems. Preliminary designs should allow 5 percent of the gross floor area for facility related

mechanical room space. This floor area requirement can vary in the final design due to factors such as use of a basewide steam system. Mechanical rooms for aviation training facilities typically contain a variety of equipment types which must be accommodated early in the design. Provide adequate space for operation, maintenance, and servicing of both device contractor and construction contractor supplied equipment. Locate hydraulic and pneumatic training device equipment in a separate dedicated space due to air contaminants, noise, and safety considerations.

Mechanical Pump Room. Access to both interior of the building and exterior is recommended. Pump rooms supporting large hydraulic systems may require high ceilings to allow maintenance access with a permanent or temporary overhead crane to assist in the maintenance procedures. Allow adequate access space around and above equipment for maintenance. Include space for hydraulic fluid storage. Provide concrete curbs around perimeter of hydraulic pump bases and/or metal pan under pump seals with drainage slope to sump to retain fluid waste for proper disposal. Avoid locating pump rooms on upper levels where sound can reverberate through structural systems. Isolate floors and acoustically treat walls and doors where vibration and sound can adversely affect adjacent spaces.

Officer in Charge (OIC). The person charged with controlling the use of the facility, scheduling the use of classrooms and training devices and maintaining curriculum occupies this space.

Power Plants Trainer. Trains aircraft mechanics to operate, test, and troubleshoot the aircraft engine system. The engine as simulated on the trainer responds to changes of atmospheric conditions, altitude, and airspeed.

Shower Room. Verify if facilities are required for training mission support.

Student Lounge. Locate convenient to vending machines and coffee mess.

Technical Library. This space is used by trainees and instructors. It is heavily used by those involved with avionics.

Toilets. Specify ceiling hung partitions for easier cleaning and drainage to eliminate rusting of floor mounts. Provide solid plastic partition finish for better hygiene and graffiti resistance. Provide shelf for temporary stowage of hand carried items such as hats and books.

Vending. Provide an alcove or a separate area off the corridor such that pedestrian traffic is not restricted, but also located convenient to or within lounge area. Locate vending machines where they can be properly serviced and maintained with minimal disturbance to facility operations. Provide secure brackets to prevent overturning of machines. Provide a hard surface floor sloped to floor drains adjacent to vending machines. Buildings having more than 100 federal employees located therein or 15,000 square feet or more should have one or more satisfactory sites for a blind-operated vending facility.

Visitor Control. Locate the checkpoint at the primary pedestrian entrance to the facility adjacent to the lobby and near administrative areas with a visitor control security checkpoint. Include a recessed scuff area at the entry point for control of debris from foot traffic. A vestibule is recommended for energy conservation. Provide 42 inch high counter with sign-in area, intercom system where required, under counter files, lockable storage, and staff phone. Accommodate number of personnel designated by the user.

3.2.2.5 Interior Design. NAVFAC DM-14.01, Interior Design, provides interior design guidance. Provide imaginative and creative use of colors and furnishings. Design solutions should also be economical and the furnishings maintainable. Fully integrate interior design with the work of other design and engineering disciplines at all stages of the facility design process. Provide only those finish systems which have a proven track record of use and testing. Selection criteria should balance all factors related to installation and usage: initial and life cycle costs, ease of maintenance, comfort, etc. Refer to appropriate tables for suggested interior finishes.

Maintenance training buildings are heavily used. The continued success of initially achieved design objectives is dependent upon the longevity of the materials used. Select all interior materials and finishes on the basis of their durability, safety, and suitability for cleaning procedures. Corridors, for example, must be designed for transportation of training aids and devices as well as heavy trainee traffic. Terrazzo flooring in laboratory settings has proven high resistance to wear and maintains good appearance.

a) Color. Develop a color plan that is consistent with the building program. Use color to stimulate positive human physical and emotional reactions and to enhance the overall functions of the building. For example, color may be used to direct and orient users to color-keyed functions on floors. Color selection can also support maintenance management. As a general rule, fixed building materials (e.g., pavers, ceramic tile, resilient flooring, ceilings, etc.) should be relatively neutral. Introduce stronger accent colors on more changeable finishes (e.g., paint, wall coverings, carpet, furnishings). This will allow color changes at minimum cost as areas are refinished in the future.

b) Floors. Training facilities are subject to heavy trainee in/out pedestrian traffic. Entry points and corridors must withstand heavy foot traffic. Minimize tracked in dirt by using walk-off mats at entry points to protect flooring and to reduce maintenance. Provide durable and easily maintained floors. Consider safety, noise impact, traffic bearing requirements, chemicals and compounds used on flooring and moisture that flooring will be subjected to under normal and special conditions. Carpeting may be used in accordance with Table 2.1, Recommended Finishes, MIL-HDBK-1001/1, Basic Architectural Requirements, and MIL-HDBK-1008C, Fire Protection for Facilities Engineering Design and Construction.

c) Ceilings. Metal slat ceiling systems are prohibited, since they do not allow heat to collect at heat detectors. Value Engineering reports also show significant implemented savings for acoustical tile ceilings over metal slat systems. Ceiling systems for corridors which

usually must accommodate an array of utilities must be thoroughly evaluated against ease of access, sound control, fire protection requirements, future utility adaptations, life cycle cost, and maintainability.

3.2.2.6 Signs. Provide a signage plan, legend and details. Design signs as an integral part of an overall building and site system, to be furnished and installed under the construction contract. Economy, aesthetics, durability, flexibility, ease of installation and maintenance are important considerations of signage design. Design the system to inhibit vandalism but with flexibility to enable the addition or deletion of information. Select a mounting mechanism for the signs to permit the reuse of signs as the facility changes. Specify an easily-read letter form such as Helvetica Medium. Indicate the design, location and installation method in the plan, elevations and specifications. Require the contractor, in the project specifications, to make a comprehensive submittal of the proposed signage system and to provide information necessary for acquiring new or replacement signs. The exterior signage system must be respected both on and off the specific facility site. Any signage must also be harmonious in the landscape. Care must be taken to use signs only when necessary and to restrict the use of random styles, placement and colors. Prepare a Signage Manual to instruct the activity in maintenance of the signage system and provide specialized equipment and materials necessary for same.

Since course durations are often short, each incoming class must be able to orient easily. Place emphasis on directional signage to immediately familiarize trainees with the room names and numbers. Wall-mounted signs extending into the corridor will indicate room identifications from a distance and greatly enhance efficient access to the appropriate rooms.

a) Entrance Sign. Entrance signs at roadway, walkway and/or building entry point may be necessary to introduce the training facilities to visitors including the handicapped. Entrance signs should be positioned for visibility and clearly identify the building name, function, number and organization, and should be consistent with the installation's overall signage system. Often, several building entry signs are required to identify those activities that may be reached via a specific entry point when a building has more than one primary entrance.

b) Building Identification Sign. Training facility identification signs identify a building by name and number. Design identification signs as part of the overall signage system of an installation, using freestanding signs and/or wall mounted signs. Locate and size building identification signs for visibility from the main access street. Coordinate building numbers with the Public Works Office and fire service requirements, and position at standard locations on the building.

c) Building Directory. Locate a building directory where it is clearly visible to all visitors as they enter the building. The building directory should consist of a permanent header panel with the name of the building or the major organization in the building, plus a directory section that lists each tenant. Provide a changeable letter board with changeable letters or message slots for the directory section. In large training facilities, a building locator plan to identify building spaces, key

activities, and personnel may be a necessary addition to the directory. Locate floor or building section directories to be clearly visible to pedestrians entering from elevators, stairs, or major corridors.

d) Directional Signs. Locate directional signs to indicate the location of high priority destinations, departments and functions of a building at every decision point - opposite the elevators, opposite the stairways, and at each corridor intersection. Indicate route to classrooms by number groupings. Include directions to toilets, lounge, library, vending and outdoor smoking areas.

e) Room Identification Signs. Room signs identify room entrances and services such as toilets, telephones, housekeeping activities and stairs. Room numbers in addition to names are essential for repetitive spaces such as classrooms and offices.

f) Regulatory Signs. These prohibit certain activity, for example, "No Smoking" or "No Entry." Many safety signs are required by law or regulation and may include building evacuation, fire exit maps, or exit maps specifically for the handicapped.

g) Informational Signs. Additional signs may be required to list building and activity operating hours.

h) Notice/Bulletin Boards. These are especially important in training facilities to control clutter and readily accommodate changing information throughout the building. Provide tack board surfaces or similar surface management systems to accommodate unanticipated messages, signs, posters, announcements, etc. at high traffic areas, doors, elevators, counters, columns, drinking fountains, public telephones, lounges, etc.

i) Handicapped Criteria. Coordinate all signs with the handicapped requirements of Federal Standard 795 and ADAAG.

j) Additional Guidelines. Refer to NFGS-10440G, Signs for additional guidelines. Also, Air Force Pamphlet AFP 88-40, Sign Standards, provides excellent guidelines for Department of Defense facilities in general. The information is nonproprietary and easily modified to match specific facility designs and Base Exterior Architectural Plan (BEAP) standards.

3.2.2.7 Windows. Natural light is desirable, but certain rooms will require blackout shades or draperies for visual aids. Sun screens, roof overhangs, and recessed windows can effectively control direct light penetration. Provide window head details to accommodate installation of window coverings and ease of operations.

Provide operable windows for natural light and ventilation where permitted by security provisions. Do not use eye level windows which can be a distraction for trainees in classroom settings. Provide clerestory windows in the classrooms where practical for natural light and ventilation unless security criteria is prohibitive. Comply with NFPA 101 for window size and mounting heights.

TABLE 3.1
RECOMMENDED FINISHES-AVIATION MAINTENANCE TRAINING FACILITIES

| ROOM | WALLS | FLOOR | BASE | CEILING | REMARKS |
|---|---|---|---|---|---|
| ADMINISTRATION | PTD OR VWC | VCT OR CPT | RUBBER | ACT | |
| AVIONICS TRAINER | PTD | VCT OR ACCESS | RUBBER | ACT | |
| CLASSROOMS | PTD | VCT OR CPT | RUBBER | ACT | 5 |
| CLASS EQUIP STOR | PTD | VCT | NONE | ACT | |
| CONFERENCE | PTD OR VWC | CPT | RUBBER | ACT | |
| CORRIDORS | PTD | VCT | RUBBER | ACT | 6,4,5 |
| CPOIC | PTD OR VWC | CPT | RUBBER | ACT | |
| ELECTRICAL ROOM | EXP | CNC | NONE | EXP&P | |
| ELECTRONIC MAINT | PTD | VCT | RUBBER | ACT | |
| ENTRY LOBBY | PTD OR VWC | QT | QT | ACT | 7,4,5 |
| GEN SUPPLY | PTD | CNC/SLR | NONE | EXP | |
| Hands-on MOCK-UP | PTD | CNC/SLR | RUBBER | EXP&P | |
| INSTRUCTOR WORK | PTD | CPT | RUBBER | ACT | |
| JANITOR CLOSET | PTD | VCT | NONE | EXP&P | |
| LAB/CLASSROOM | PTD | VCT | RUBBER | ACT | 1,2 |
| LABORATORY | PTD | VCT | RUBBER | ACT | 8 |
| LIBRARY/LC | PTD OR VWC | CPT | RUBBER | ACT | 3 |
| LOCKER ROOM | PTD | VCT OR QT | RUBBER/QT | ACT | |
| I & S LOUNGE | PTD | VCT/CPT | RUBBER | ACT | 5 |
| MAIL ROOM | PTD | VCT | RUBBER | ACT | |
| MAINTENANCE SHOP | PTD | CNC/SLR | RUBBER | EXP&P | |
| MECHANICAL ROOM | EXP | CNC/SLR | NONE | EXP&P | |
| MECH PUMP ROOM | EXP | CNC/SLR | NONE | EXP&P | |
| MEDIA STORAGE | PTD | VCT | NONE | ACT | |
| OIC | PTD OR VWC | CPT | RUBBER | ACT | |
| SHOWER ROOM | CT | CT | CT | PGWB | 9 |
| STUDENT LOUNGE | PTD | VWC | RUBBER | ACT | |
| TECH LIBRARY | PTD OR VWC | CPT | RUBBER | ACT | |
| TOILET | PTD | CT | CT | ACT | |
| TRAINER ROOM | PTD | CNC/SLR/HDR | RUBBER | EXP&P | 10,11 |
| VENDING | PTD | VCT/QT | RUBBER/QT | ACT | |
| VISITOR CONTROL | PTD | CPT | RUBBER | ACT | |

TABLE 3.1 (Continued)
RECOMMENDED FINISHES-AVIATION MAINTENANCE TRAINING FACILITIES

General Notes:
1. See Glossary for finish material abbreviations
2. VWC and alkyd paint use is limited due to vapor infiltration.

Remarks:
1. Alternate durable floors include concrete with hardener/sealer.
2. Exposed and painted ceilings are also acceptable.
3. Consider acoustical wall panels where additional sound absorption is required.
4. Metal slat ceilings are prohibited. Refer to paragraph 3.2.2.5 for further data.
5. Provide washable paint with eggshell or semigloss finish.
6. Carpet is discouraged. Provide other methods of sound control.
7. Consider alternate durable floors such as terrazzo.
8. Consider functions and consult user to verify floor and ceiling finishes.
9. Provide washable and mildew resistant paint with gloss finish.
10. Provide acoustical ceiling tile where sound absorption is needed. See "Avionics Trainer" for special finishes.
11. Provide a white color "dry shake" hardener.

Provide non-obtrusive observation glass panels where desired by the user in classrooms, laboratories and other non-private trainee occupied areas. Glazed openings that are subject to accidental human impact due to location, such as sidelights that extend to the floor, should comply with 16 CFR Part 1201, Safety Standard for Architectural Glazing Materials, issued by the U.S. Consumer Product Safety Commission.

3.2.2.8 Doors and Hardware. Exterior wall overhead doors can be a critical source of extreme heat gain/loss and air and moisture infiltration into lab/ classroom settings where temperature and humidity conditions must be maintained. Overhead coiling doors to the exterior are not acceptable for environmentally conditioned spaces. Provide weathersealed insulated vertical lift or sectional doors or insulated removable panels with lifting eyes. Insulated panels must be easily removable by facility personnel. Provide adequately sized interior corridor doors for classrooms with oversized equipment, where possible, in lieu of exterior openings into each classroom, to minimize exposure to exterior elements. Size all doors to accommodate the path of oversized equipment from loading areas to destination and between rooms. Provide inactive leafs and removable transoms where equipment moves are infrequent. Allow for maneuverability in tight corridors.

a) Classrooms or other areas where classified information is used should not have doors with viewing windows.

b) Provide four hinges where required on heavy use doors. Avoid panic hardware except where specifically required by criteria, since the Navy does not classify training facilities as schools.

3.2.2.9 Natural Lighting. Natural light is encouraged, as it contributes significantly to the energy efficiency of the building and communicates a feeling of well-being and openness. Natural light can be used in conjunction with high efficiency artificial lighting, featuring photosensitive controls for maintaining lighting levels automatically. Skylights are not permitted, due to excessive solar heat gain and leak potential. Classroom wing corridors and other interior occupied spaces may incorporate monitors with conventional roofing and vertical windows. High bay spaces may incorporate clerestory windows in cases where natural lighting is desired without any distracting or unsightly views.

3.2.2.10 Building Thermal Insulation and Vapor Retarders. Locate vapor retarders with care in view of the thermal differentials associated with training buildings. Do not use vinyl wall covering and impervious paint on the interior surface of exterior walls in humid areas, unless calculations show that condensation will not occur within the wall.

Special purpose rooms such as laboratories and computer rooms normally require stringent air conditioning requirements. Provide adequate insulation and vapor transmission barriers to minimize the loads on the mechanical system. Ceiling decks of spaces below supercooled computer rooms and perimeter walls are apt to collect condensate if not properly insulated.

3.2.2.11 Handicapped Design. Provide barrier-free access to civilian work spaces and other spaces intended for public access. Design facilities to locate handicapped access spaces on first floor only, unless the size of the facility's administrative and other accessible areas requires a second floor.

Areas hazardous to handicapped persons need not be accessible. Comply with current criteria in Uniform Federal Accessibility Standards (UFAS).

3.2.2.12 Elevators and Stairs. Comply with requirements of DM 3.09, Elevators, Escalators, Dumbwaiters, Access Lifts, and Pneumatic Tube Systems and handicapped criteria in UFAS. For safety related measures, comply with ASME/ANSI A17.1, Safety Code for Elevators and Escalators, and NFPA 13, Standard for the Installation of Sprinkler Systems.

Provide freight elevators where stairs cannot accommodate the weight and size of routinely transported equipment. Consider the weight associated with transporting security vaults or training equipment to upper levels. Provide stair tread nosings that are resistant to heavy trainee pedestrian traffic volume.

3.2.2.13 Access Floor Systems. The underfloor space must be properly sealed if used as an air conditioning supply plenum. Use plastic laminate covering for access floor panels. Provide access flooring in computer rooms and in administrative spaces where networks are used.

3.2.2.14 Ceilings. Provide access where projection, mechanical and electrical equipment, including adjustment, maintenance and shutoff devices, are located. Ceilings should be maintainable and easily repaired.

Projections from the ceiling such as sprinklers and light fixtures can impinge on clearances required for device installation and removal, as well as crane and hoist operations. Coordinate all ceiling items on a comprehensive reflected ceiling plan.

3.2.2.15 Walls. Impervious finishes applied to the interior side of exterior walls must be carefully evaluated against dew points to prevent vapor dams and subsequent failure of the installation. Protect the corners of walls and columns in areas where equipment moves are frequent.

3.2.2.16 Acoustical Control. A Noise Level Reduction (NLR) minimum factor of 30 is required in the 70-75 DNL zone and an NLR minimum factor of 25 is required in the 65-70 DNL zone. There are no special requirements in the DNL zone below 65.

Use noise and sound transmission criteria cited in DM 1.03, Architectural Acoustics. Prevent sound transmission over walls. Acoustic absorbing material should be fire and smoke rated as required in MIL-HDBK-1008C.

3.2.3 Landscape Architecture. The framework for planning and design of all landscape architectural elements is found in the activity Master Plan and more specifically in the Base Exterior Architecture Plan (BEAP). General guidance for all design elements can be found in NAVFAC P-960, Installation Design. Landscape design must enhance positive image for the facility and should direct pedestrians to a primary entry. Design for minimal maintenance. Provide landscape fabric for weed prevention. Select hardy specimen species indigenous to the area. Locate hose bibbs convenient for additional irrigation.

Outdoor pedestrian-oriented spaces are often useful for building entry plazas, for break and lunch areas, and to provide pleasant views from the building interior. Design outdoor areas to harmonize with the architectural and natural site character of their surroundings, but to also moderate environmental and climatic extremes, such as noise, sun, wind and seasonal precipitations.

3.2.3.1 Site Analysis and Development Concept. If the analysis and development is successful, the biological integrity of the site will be retained or improved, while successfully meeting the program needs of the user in a comfortable, attractive and functional setting. Minimize clearing of existing vegetation and avoid excessive grading.

3.2.3.2 Planting. Guidance for planting design is provided in NAVFAC P-905, Planting and Establishment of Trees, Shrubs, Ground Covers and Vines. Plantings can provide a pleasant setting and visual asset, and minimize the environmental impact of development. The following is a list of minimum guidelines to be considered in implementing new planting schemes for the facility:

a) Preserve Existing Vegetation. Existing mature stands of trees or other significant vegetation are to be preserved and enhanced, where possible.

b) Select Indigenous Plant Materials. Plant materials chosen will be indigenous to the site.

c) Design for Minimum Maintenance.

d) Define Space and Screen Conflicting Uses. Select plant material to define space and screen visually conflicting uses, where appropriate. See section on screens and walls below.

e) Promote Energy Conservation. Plant materials are to be used to reduce energy requirements, where possible, such as shading with deciduous trees. Enhance any desirable climatic effects, such as clear areas at large glass areas oriented for winter sun heat gain.

f) Establish Unifying Elements. Provide planting as a means to unify different elements of an installation.

3.2.3.3 Landscape Lighting. The creative use of lighting can greatly improve the visual character of a project landscape, while providing the nighttime functions of safety, security and path finding. In addition to simply achieving a higher level of illumination, the lighting levels, color, patterns and style should be energy efficient, attractive and functional in a coordinated landscape scheme.

3.2.3.4 Exterior Signs. Conform to requirements of the BEAP.

3.2.3.5 Utilities. Grouping in corridors, underground placement, and screening and grading can de-emphasize the impact of utilities on a site. Flow tests must be conducted to determine the available water supply for fire protection. Indicate a static pressure and a residual pressure at a certain flow.

3.2.3.6 Site Furnishings. In conjunction with the site and landscape design, provide appropriate signs; structures; outdoor furniture and equipment, such as tables and seating; vending machine shelters; telephone booths; screen wall and fences; as well as the more symbolic elements, such as flag poles, memorials and military equipment displays. Definitive design and other data for flagstaffs are available in MIL-HDBK-1034, Administrative Facilities. The lack of coordination, as well as concern for detail, are the primary problems related to site furnishings. Select site furniture that is simple, requiring low maintenance, and relating in color, texture, and form to the building design and established base character and BEAP guidelines.

3.2.3.7 Equipment Screens and Walls. Screens and walls for mechanical and electrical equipment are encouraged for aesthetic purposes, but can severely penalize equipment performance. Carefully coordinate design with each engineering discipline. Shade for mechanical equipment is desirable; however, leaves may clog equipment.

3.2.3.8 Selection of Plant Material. Select plant materials on the basis of hardiness and degree of maintenance required. Avoid plants which require more frequent attention than the users can provide to stay in a healthy condition or have an attractive appearance.

3.2.4 Civil. NAVFAC Criteria Manual Series on civil engineering (MIL-HDBK-1005 series) provides general guidance for civil engineering, site work and other related topics. Refer to MIL-HDBK-1008C for location and spacing of fire hydrants. Refer to Manual on Uniform Traffic Control Devices for Streets and Highways, (MUCTCD) for traffic control devices. Provide surface bearing capacity for heavy equipment or trucks outside the high bay doors. Consider loaded forklift wheel loads on the paving design. Forklifts will normally be used to transport equipment into the building from the delivery truck. Edges more than 1 inch in height cannot be negotiated by forklifts. Provide clear path for delivery and removal of equipment from access roads to loading dock. Account for all obstacles and provide adequate turning radii.

Coordinate location of mechanical equipment pads with mechanical design and show major pieces of equipment on civil engineering drawings. Locate noisy equipment remote from occupied spaces and as near as possible to the mechanical spaces. Distribution piping (utilities, refrigerant, condenser water, etc.) should enter the building only through mechanical spaces. Shade is desirable; however, equipment should not be located beneath trees, where it can become clogged with leaves and debris.

3.2.4.1 Roads, Parking and Walkways. These are three of the most land consuming uses on a site. Negative visual impact can be minimized by locating facilities conveniently to each other, encouraging pedestrian use and other non-vehicular modes of access.

Vehicular or pedestrian paving should be in character with a safe, functional and visually pleasing landscape. The sharing of parking and road requirements will minimize total impact. Small parking lots are usually preferable to large lots, since they allow for conforming to the natural topography and other site features and are visually less obtrusive. Provide appropriate paved area and adequate maneuvering space for semi-tractor trailer and other truck deliveries. Provide ramps at curbs along routes

leading to storerooms to facilitate wheeled access. Accommodate training device transportation into and out of the building through adequate turning radii and appropriate loading facilities. Provide vehicle protective barriers for light standards and fire apparatus.

Pedestrian access to training facilities is normally restricted to a single entrance point, due to security criteria. Pedestrian traffic to and from the parking lot is heavy due to multiple daily training sessions. Determine if egress is permissible through secondary exterior doors and, if so, accommodate with walkways. OPNAVINST 5530.14B, Physical Security and Loss Prevention, prohibits parking of privately owned vehicles within 15 feet of any building. Include concrete surface spaces for bicycle racks and motorcycles. Storm drainage and other grates must be oriented with parallel slots perpendicular to the paths of bicycles. Criteria for vehicle parking area design is shown on NAVFAC drawing number 1404837, entitled "PARKING AREA CRITERIA FOR VEHICLES."

3.2.4.2 Handicapped Access. Provide curb ramps, access aisles, and handicapped parking spaces near accessible entrances.

3.2.4.3 Loading Dock Ramp Protection. Each facility requiring a loading dock ramp should be provided side-edge protection in compliance with Section 1910.23c of Public Law 29, Code of Federal Regulations, Occupational Safety and Health Act Standards Manual.

3.2.5 Structural. Structural design should comply with MIL-HDBK-1002 series, Structural Engineering and NAVFAC P-355, Seismic Design for Buildings. Base an economical structural system on facility size, projected load requirements, quality of locally available materials, local labor and construction materials, and local wind, snow, seismic, geologic and permafrost conditions.

Depress structural framing and slabs in lab areas where access flooring occurs to provide uniform, continuous finish floor levels between adjacent spaces.

Account for the weight of any classified file safe and fuel weights at fuel trainers.

3.2.5.1 Clearspan Requirements. Columns in the high bay training area are typically prohibited. Check excursion limits for device and accommodate flexibility.

3.2.5.2 Weight Handling Equipment. Cranes and monorails should comply with DM 38.01, Weight Handling Equipment. Conform to NAVFAC NFGS-14637H, Cranes, Overhead Electric, Underrunning (Under 50,000 Pounds), and NFGS-L-14622, Monorails with Electric Powered Hoists, where applicable. Provide platforms, catwalks, access ladders, and any other provisions for inspection and maintenance of cranes and hoists.

Obtain user and device manufacturer input regarding controls and speed criteria for hoist, trolley, and bridge, hook heights, capacities and service area. Note that lifting the device will require more clearance than necessary for stationary position. Hoists may be required at specified Lab/Classrooms.

3.2.5.3 Floors. Design floor slabs along the travel path of any equipment to withstand the heaviest wheel loads anticipated during the installation, in compliance with criteria in MIL-HDBK-1002/2, Loads. Training equipment incorporating motion systems will impose static and dynamic forces upon the facility structure.

Isolate the mechanical equipment room floor slabs from the remainder of the facility.

Current computer equipment trends are toward more compact, yet denser and heavier components. Future floor loads will probably localize into more extreme concentrated loads.

3.2.5.4 Roof Loads. Mechanical equipment is preferred at ground level; however, where roof mounting is necessary, design screening in accordance with local wind loads and directional patterns. Anticipate other roof structure mounted accessories, such as catwalks, ladders, hoists and cranes.

3.2.6 Heating, Ventilating, and Air Conditioning. Comply with MIL-HDBK-1003/3 and refer to MIL-HDBK-1008C for coordination with fire protection systems. Consider 100 percent capacity back-up HVAC equipment to maintain critical operations. Coordinate exterior mechanical equipment location with civil design. Locate noisy chillers and other equipment remote from occupied spaces and as near as possible to the mechanical spaces. Shade is desirable; however, equipment should not be located beneath trees, where it can become clogged with leaves and debris. Distribution piping for utilities, including refrigerant and condenser water, should enter the building only through the mechanical room. Avoid routing chilled water piping over computer areas and trainer devices, to prevent damage to high cost equipment from leakage and condensation. Provide isolation valves to facilitate maintenance without system shutdown. Comply with NAVFAC DM-3.10, Noise and Vibration Control of Mechanical Equipment, where adjacent spaces and/or sensitive equipment cannot tolerate noise and vibration.

Ceilings may be higher than normal for classroom settings due to lab trainer requirements. Accommodate appropriate air flow requirements at the trainee table working level.

Lab/Classroom. High ceiling areas may require use of ceiling fans to distribute conditioned air to seated occupants.

3.2.6.1 Design Conditions. Design conditions for comfort conditioning should be determined in compliance with MIL-HDBK-1190. Electronic and computer procurement documents require that equipment function properly in an air conditioning environment between 60 degrees and 80 degrees Fahrenheit for electronics and between 45 degrees and 120 degrees for mechanical equipment including hydraulics.

3.2.6.2 Ventilation. Provide ventilation rates for occupied spaces as required in ASHRAE STD 62. Provide thermostatically controlled forced ventilation in mechanical, electrical and hydraulic spaces. Cool hydraulic pump rooms and compressor rooms by mechanical ventilation only.

3.2.6.3 Zoning, System Selection and Part Load Performance. Occupancy of classroom areas varies drastically with respect to training schedule. Consider each classroom/training area as a separate temperature and humidity control zone. Provide individual temperature controls for each classroom. Size terminal equipment to accommodate minimum as well as maximum loads. Multiple air handling units (allowing staged turn-down of system capacity as sensible load falls) should be considered. Terminal reheat is permitted to meet part-load humidity performance requirements; in electronic equipment spaces, the amount of reheat available should be approximately equal to the sensible electronic load within the space.

3.2.6.4 Controls. DDC is the control system of choice for HVAC systems. Consider life cycle cost, maintenance requirements, and customer preference.

3.2.7 Plumbing. General guidance for plumbing design is provided in DM-3.01, Plumbing Systems. Coordinate plumbing with structural design to avoid conflicts between underground pipes, trenches and footings. Provide shut-off valves to isolate systems when doing maintenance, so that entire facility is not affected by an outage. Do not locate roof drains and roof drainage piping over computer spaces and trainer devices to prevent damage to equipment in case of leakage or condensation.

3.2.7.1 Mechanical Pump Rooms. Floor drains subject to oil spills must drain to an oil separator. Provide flexible couplings between pumps and piping systems for vibration and sound control.

3.2.7.2 Compressed Air. Comply with the requirements of NAVFAC DM-3.5, Compressed Air and Vacuum Systems.

3.2.7.3 Electric Water Coolers. Splash resistant basins are recommended to prevent slippage on the floor and shock hazard. Handicapped models should be recessed as required to minimize obstruction to passage.

3.2.7.4 Waste Systems. Guidance is provided in DM-3.01, Plumbing Systems. Accommodate oil separators and interceptors as well as special drain requirements for HVAC, chillers, and trainer equipment.

3.2.7.5 Emergency Eyewash/Shower. Locate for ready access from hazard areas. Slope floor to drain beneath shower head. Provide curtain and testing apparatus.

3.2.8 Electrical. Typically, specific electrical requirements for training facilities and/or training device(s) are contained in a TFR or Technical Manual. Applicable NAVFAC design manuals and military handbooks provide general guidance on electrical engineering. Consult them in conjunction with the current editions of NFPA 70, National Electric Code, and ANSI C2, National Electric Safety Code.

Provide two-way communications from classrooms to administrative area or security desk, if required by the user. Provide centralized 400 Hz solid state invertor and 24 VDC, both with backup for service to appropriate trainers without integral units.

Mechanical Pump Rooms. Provide steel conduit with liquid type fittings where electrical cables are located in the same trench with hydraulic piping.

Classrooms. Locate 120 volt convenience outlets for use of portable audiovisual equipment. Provide conduit stub-outs with pull wire in ceiling space for future ceiling mounted audiovisual aids, such as projection systems.

Corridors. A shock hazard exists from convenience outlets in areas where floor buffers are used. Provide locking type outlets and metal device covers mounted high above splash zones.

3.2.8.1 Closed Circuit Television. Comply with MIL-HDBK-1004/7. Centralized VCR Signal Distribution System should be provided where possible, in lieu of portable equipment. Portable VCRs on mobile stands are repair intensive and require unnecessary set-up time in individual rooms. Include cable outlet in the lounge for training.

3.2.8.2 Telecommunications. Provide a structured telecommunications system including interior and exterior conduits, cabling, pull wire, telecommunications backboards, and outlets. Provide a telecommunications outlet for each elevator in the facility. Refer to MIL-HDBK-1012/3 for interior telecommunications cabling. Consider telephone and communication outlets in maintenance areas and dedicated lines at devices where networking is anticipated. Accommodate any special simulator contractor communication requirements which may require intercom features integrated into the telephone system.

3.2.8.3 Computers and Training Devices. Refer to manufacturer's TFR and comply with MIL-HDBK-1004/1, MIL-HDBK-1004/4, and MIL-HDBK-1012/1. In training facilities with high concentrations of micro computers control the effects of harmonics when designing branch circuits serving the computer areas. Provide surge protection, filter/conditioning power in accordance with requirements of the TFR. In the absence of specific requirements in the TFR, review the quality of power which will serve the proposed facility and provide surge protection, filters, and conditioners as necessary. See Trainer Facility Data and Equipment Summary sheets for each aircraft type in this handbook for preliminary planning purposes.

3.2.8.4 Lighting. Overhead fluorescent lighting can hamper vision at radar scopes, test scopes, and other CRT screens. Provide appropriate lighting for these functions to reduce glare. Provide fluorescent fixtures with battery packs and/or wall packs for emergency lighting, in lieu of a central system.

Classrooms. Lighting controls (dimmers and/or selective lamp and ballast switching) with discrete circuits for the front of the room, allow for effective visual use of television monitors, projectors, view graphs, etc. Special lighting consideration may be required for lab/classrooms. Ceilings may be higher than normal for lab/classroom settings for better spatial quality due to the size of the room and to accommodate lab trainer device size and excursion limit requirements. Accommodate appropriate lighting intensity requirements at the trainee table working level. Extend lighting fixtures down below any ceiling fans. Trainer mockups may require

more intense lighting than the general classroom ambient level. Use spectrum ranges appropriate for classroom settings. Emergency lighting is required as a safety precaution for operation of equipment during power failures.

3.2.8.5 Lightning Protection. Perform a lightning protection risk assessment on all aviation training facility types, in compliance with Appendix I of NFPA-780, Lightning Protection Code, to justify lightning protection when required by the regional Engineering Field Division. Comply with applicable sections of MIL-HDBK-1004/6, Lightning Protection.

3.2.8.6 Facility Low Voltage Power. Refer to applicable TFR or Technical Manual and comply with MIL-HDBK-1004/1 and MIL-HDBK-1004/4. Generally provide 480Y/277 volt, three phase, four-wire service to the facility along with dry type transformers to step voltage down for 120, 208 and 240 volt requirements.

3.2.8.7 Intrusion Detection System (IDS). Facility IDS systems are procured and installed via contracts administered by NCIS. Coordinate with NCIS for facility planning, design and construction schedules. IDS systems including commercial power supply, utility and control wiring systems are considered personal property. Provide support system in the construction contract, to include conduit with pull wire and device boxes as directed. IDS for Marine Corps projects are separately funded and managed and do not require NCIS coordination. Provide IDS support requirements and startup specification where required, in accordance with MIL-HDBK-1012/1.

3.2.8.8 Uninterruptible Power Supply (UPS). UPS systems, when required and justified by the user and dedicated to the support of an item of personal property, are typically procured for Military Construction(MILCON) projects via contract administered by NFEFC, and are installed by the facility construction contractor (i.e., Government furnished/contractor installed). Provide UPS support requirements and startup specification where required, in accordance with MIL-HDBK-1012/1.

3.2.8.9 400 Hz Power. Comply with MIL-HDBK-1004/5, 400-Hertz Medium-Voltage Conversion/Distribution And Low-Voltage Utilization Systems. Due to the size of the load, solid state 400 Hz power supplies located in close proximity to the utilization equipment are required.

3.2.8.10 Facility Shielding. Provide electromagnetic and/or TEMPEST shielding if required by with MIL-HDBK-1195, Radio Frequency Shielded Enclosures.

3.2.9 Fire Protection. Comply with MIL-HDBK-1008C, Uniform Building Code (UBC), and NFPA 101. Classroom facilities for Navy installations are considered "business" occupancies per NFPA 101. Assembly occupancies, conference rooms and classrooms with fixed seating, require special attention. Berthing rooms require smoke detectors in accordance with MIL-HDBK-1008C and NFPA 72, National Fire Alarm Code. Provide visual fire alarm signals on a case by case basis, where ambient noise in classrooms can prevent hearing audible alarms. Requirements for sprinkler systems, carbon dioxide extinguishing systems, fire alarm systems and protection of electronic equipment installations, are determined by MIL-HDBK-1008C. Hand held portable halon extinguishers are permitted; however, automatic halon extinguishing systems are not. Convey fire alarm signals to the base fire

department via the base fire reporting system. Verify the type of system with the station fire department.

a) Hydraulic Fluid Piping Systems. High pressure 2000 psi hydraulic fluid has a high flashpoint and atomizing fluid leaks can self ignite with friction. Spaces containing exposed hydraulic fluid piping are subject to special protection. Provide fire stop seal where piping and cable in trenches pass through fire rated walls.

b) Hydraulic Pump Rooms. Specify electrical fixtures in the pump room as Class I, Division I explosion proof. Provide two-hour fire resistive rated perimeter walls, if an ordinary petroleum-based hydraulic fluid is used.

c) Computer Rooms and Other Electronic Spaces. Comply with MIL-HDBK-1008C. Provide sprinkler protection. Controls should automatically shut down computer, electronic and simulator power upon activation of the sprinkler system. Provide a plaque citing, "WARNING--Fire suppression system sill shut down computer power to minimize damage--loss of data may occur." Smoke detection is required in subfloor spaces. Design computer/electronic and air conditioning equipment power to shut down upon activation of sub-floor smoke detectors in the associated room. An automatic carbon dioxide fire extinguishing system may be required by MIL-HDBK-1008C. Place exits in accordance with occupancy counts and travel distances around equipment to comply with NFPA 101.

d) Media Storage Rooms. Design in accordance with NFPA 232, Protection of Records.

3.2.10 Safety. The design of all military facilities that serve as places of employment should conform to, or be consistent with, all applicable standards published under the OSHA of 1970. Note that Chapters 5 through 7 of this reference state that whenever construction criteria and OSHA standards conflict, "the standard providing the greatest degree of safety should govern." Obtain a System Safety Work Group (SSWG), PHL and RAC established by the activity and found in the facility study. Typical hazards include equipment guards and clearances, carbon dioxide discharge and hydraulic systems.

Moving and electrically energized parts and pressurized hydraulic systems are primary concerns. Include a safety eyewash/shower in accordance with ANSI Z358.1 where hydraulic or other petroleum, oil and lubricant (POL) materials are used in the building. Arrange for hydraulic pumps to shut down automatically if a leak or break occurs in the line at any point. Provide emergency shutoff switches for the hydraulic pumps at the instructor's station. Provide three feet safety clearances around training devices. Paint floor around any rotating device yellow and black and indicate the type of hazard, e.g., "Strike hazard-rotating device - stay clear."

3.2.11 Security. A checkpoint for identification of entrants to the building may be required. Accommodate storage and use of classified teaching materials. MIL-HDBK-1013/1 provides security information.

3.3 Collateral Equipment. When MILCON "Personal Property" facility projects are programmed, the installation criteria for the equipment must be shown in, or attached to, the facility studies for the projects involved. Major claimants, users, and equipment procurement agencies for projects of this type, are responsible for providing these criteria as part of the MILCON planning process. "Personal Property" is defined as plant equipment which is procured and installed by the major claimants, users, or equipment procurement agencies, with funds from other appropriations. This category of equipment includes technical, training, simulation, and automated data processing equipment. Detailed requirements for the aforementioned can be found in NAVFACINST 11010.44E.

Furniture items must be researched and specified in accordance with the Federal Acquisitions Regulations (FAR) Part 8 Required Sources of Supply. Each furniture piece specified must be the lowest priced item which meets the minimum functional and aesthetic needs of the facility which they will support. The functional aspect of each furniture piece must consider, as a minimum, function, ergonomics, appropriateness, and maintainability. Aesthetics must consider, as a minimum, scale, style, finishes and fabrics where applicable. All furniture items must be a level of quality which is comparable to the finishes specified for the facility itself.

3.3.1 Collateral Equipment List. The collateral equipment list is an essential programming and budgeting document. Preliminary collateral equipment lists are a means to establish a budget for funding purposes and are not intended to be used as a "buy" list. Consult the Project Interior Designer at the EFD to assist in developing functional requirements as part of the interior design process. Integrate these functional requirements with the building design and space planning effort, which is reflected in the Furniture/Equipment Footprint. Maintain a continuing update of the Collateral Equipment List with the using activity, to ensure all budget estimates are current and are adequately accommodated in the design. Include fire extinguishers and consider shredders or incinerators where classified material is used.

3.3.2 Furniture/Equipment Footprint. The Furniture/Equipment Footprint should use standard or "generic" furniture sizes to demonstrate the adequacy of each space area and the Collateral Equipment List, and to communicate to other engineering disciplines the utilities and services required for each space. It also demonstrates that life safety exit patterns are accommodated with the furniture and equipment in place. Provide a Furniture/Equipment Footprint for the PE phase or prior to 35%.

Locate lockers for books, if required by the user, for easy access between classes. Lockers in the corridor or elsewhere in the facility are at the discretion of the user. Consider locker groupings for personal belongings and foul weather gear near the main entry or student lounge.

3.3.3 Training Aids

3.3.3.1 Special Training Device Requirements. Maintenance training devices are broadly classified as simulation (SAMTS) or hands-on equipment (NAMT). SAMTS trainers are used primarily in teaching troubleshooting and operational theory and typically use interactive multipurpose displays (IMPDs). NAMT trainers are actual aircraft stock assemblies with mechanical and/or

electrical actuation to simulate functions. Electrical power for NAMT equipment usually matches actual naval aircraft power characteristics of 200Y/115 volt, three phase, 400 cycle with 28 volts direct current. Some training facilities use "hybrid" trainers which use actual hands-on equipment with computer enhancement. Hybrid systems are usually operated from a PC or mini/microcomputer which requires the same air conditioning needs as other automated data processing (ADP) systems. Totally PC based ICW may be used with dual touch screen.

Maintain a continuing update of the proposed equipment with the user, to ensure all items are current and are adequately accommodated in the design.

3.3.3.2 Audiovisual Requirements

a) Rear Screen Projection. Rear screen projection is discouraged in light of improved state-of-the-art media and additional space requirements. Where rear screen projection is essential, provide at least 6 feet clear space width behind the screen, which can accommodate the projection path and serve as media storage and instructor work space.

b) Presentation Hardware and Projection Systems. Personal computer (PC) based digitizing graphics hardware and projectors are current state-of-the-art media for visual aids in the classroom.

c) Slide and Overhead Projectors. Provide stowage space for portable carts. See concerns for aspect ratios below.

d) Projection Screens. Base selection of permanently mounted or stand alone screens on user preference. Permanently mounted screens can limit chalkboard area. Base justification of electrified projection screens on local requirements; however, maintenance and repair costs must be considered. Successful visual presentations depend on arrangements of the chalkboard and projection screen relative to the seating configuration.

1) Avoid visual obstructions. Provide clearspan structural systems where possible. Large demonstration tables when raised on platforms can obscure the lower areas of chalkboards.

2) Slope the floor and raise the speaker's platform only where space is dedicated to projection and large capacity lecture functions.

3) Consider the viewing distances.

4) Conform to the vertical and horizontal viewing angles. Place seats at a distance from a screen not less than twice nor more than six times the width of the screen image to be viewed. The angle of elevation from the eye to the top edge of the screen or chalkboard should not exceed 30 degrees. Where room or seating depth is known, the screen width can be determined by W=D/6 (preferred) or W=D/10 (minimum), where W=screen width and D=depth of room or seating. Select particular projection equipment based on aspect ratios compatible with height and width ratios for the screen. Refer to Time-Saver Standards for Building Types, 2nd edition, McGraw-Hill Book

Company, for graphic data on projection angles and screen widths. Consult Architectural Graphic Standards, John Wiley and Sons, for viewing zone limits and projection medium aspect ratios.

e) Chalkboard and Marker Boards. Porcelain surface marker boards are generally preferred since they are cleaner and can double as projection screens; however scrutinize their use in high security areas due to the potential retention of images after erasure. Avoid chalkboards in computer rooms, since airborne chalk dust can damage computer hardware.

3.3.3.3 Electronic Information Delivery Systems (EIDS). Accommodate computerized EIDS and carrels where required. Carrels must be wider than normal to accommodate the EIDS.

3.4 Environmental Requirements. For applicable discharge criteria, consult with the NAVFAC Criteria Office and the cognizant EFD. Refer to MIL-HDBK-1005/8. Design facilities to meet environmental requirements at federal, state and local levels. Obtain a MSDS on every toxic or suspected toxic product to be used at the facility and design in protective measures and ventilation methods. Comply with all applicable pollution abatement criteria.

Table 3.2
TRAINER FACILITIES DATA-F/A-18 Landing Gear and Arresting Hook

Room dimensions shown are minimums unless noted.

**** CAUTION: This document is for preliminary planning only.****
****Verify with NAMTRAGRU Code N5 prior to use. ****

**REFERENCE DOCUMENTS**

Technical Manual F18-NAMT-03 Volume 1, Main Landing Gear Trainer, 74D090003-1001 and 74D090003-1003, and 74D090003-1005, McDonnell Aircraft.

**ARCHITECTURAL**

| | MIN DIMENSIONS | OCCUPANT |
|---|---|---|
| Device/Trainee Area. | **30' x 27'** | **10** |
| Device Operating Envelope | **115"x 91"x 95"** | **(none permanent)** |

General Notes: Above requirements are Trainer Device specific. See other data for administrative & support spaces.

**STRUCTURAL**

Device installation transport method: casters
Device shipping weight = **3460** pounds, operating weight = **3100** pounds. (note 1) Floor loading in operating configuration with jack pads = **15.2** psi

Note 1: Trainers #960183 and up

TABLE 3.2 (Continued)
TRAINER FACILITIES DATA-F/A-18 Landing Gear and Arresting Hook

**MECHANICAL**

| SPACE NAME | TEMPERATURE DEGREES (f) | HUMIDITY |
|---|---|---|
| Device/Trainee Area | 78 | 30 |

Hydraulic pressure/flow rate: **3000** psi/**8** gpm. Air Supply: **Nitrogen, 1500** psi

General Note: Refer to specific device equipment list for loads.

**ELECTRICAL**

| | VOLTS | HZ | WIRE COUNT | AMPERES PER PHASE A | B | C | REMARKS |
|---|---|---|---|---|---|---|---|
| Device/Trainer | **120/208** | **60** | **5** | **0.20** | **0.05** | **0.05** | standby |
| | | | | **6.00** | **0.50** | **0.05** | start |
| | | | | **1.20** | **0.50** | **0.05** | operate |

**SAFETY**

Device/Trainee area: **eyewash/shower and safety striping**

**EQUIPMENT**

Hydraulic power unit:
supplied by: construction contractor
installed by: construction contractor

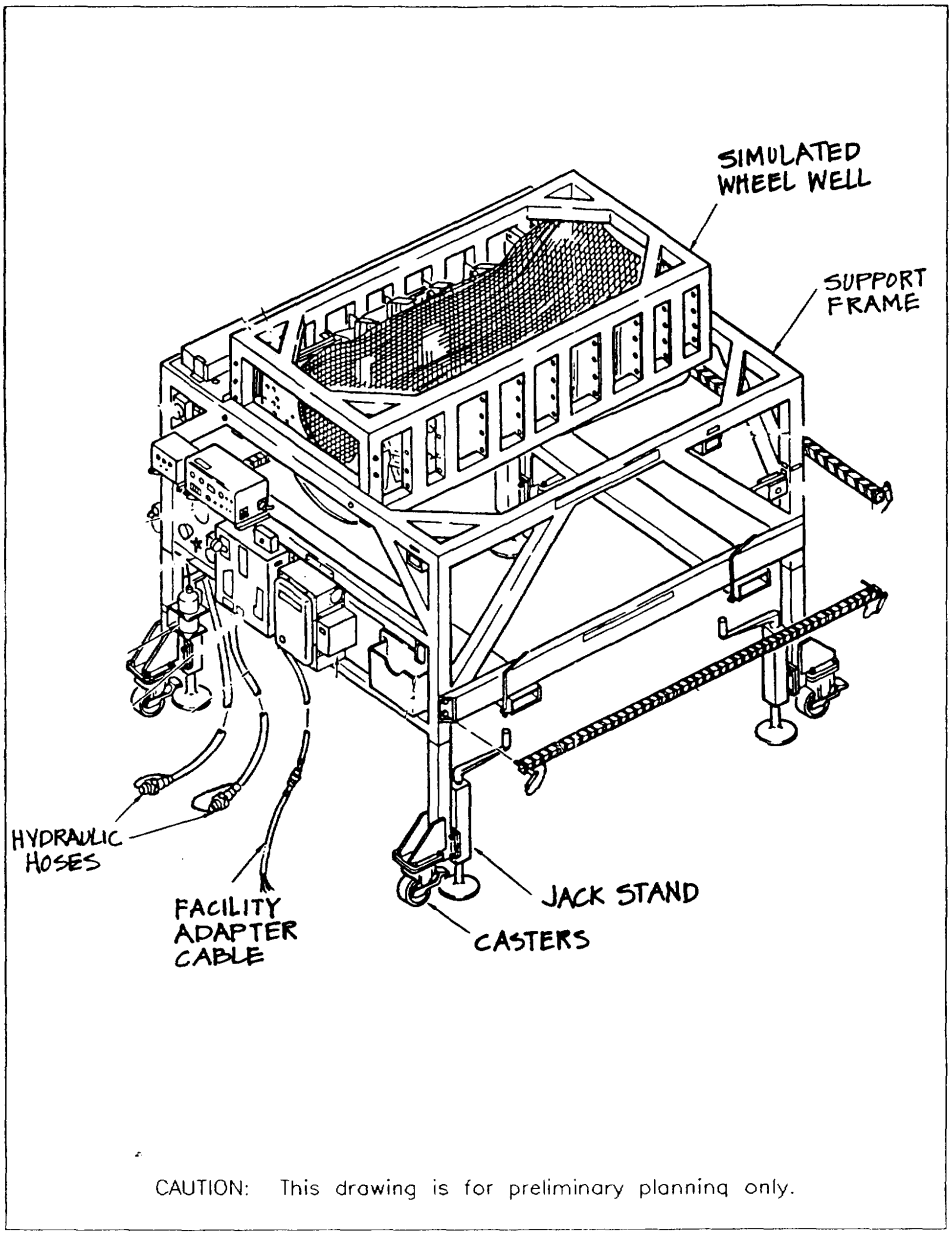


CAUTION: This drawing is for preliminary planning only.

| TITLE F/A-18 MAIN LANDING GEAR TRAINER- ISOMETRIC | DATE MAY 1992 | FACILITY PLATE NO. 171 20 | SHEET FA18 B1 |
|---|---|---|---|

TABLE 3.3
TRAINER FACILITIES DATA-F/A-18 Secondary Flight Control Trainer

Room dimensions shown are minimums unless noted.

**** CAUTION: This document is for preliminary planning only.****
****Verify with NAMTRAGRU Code N5 prior to use. ****

**REFERENCE DOCUMENTS**

Technical Manual F18-NAMT-05 Volume 1, Secondary Flight Controls Trainer, 74D090005-1001 and 74D090005-1003, 74D090005-1005, McDonnell Aircraft.

**ARCHITECTURAL**

| | MIN DIMENSIONS | OCCUPANT |
|---|---|---|
| Device/Trainee Area. | **30'x 26.5'** | **10** |
| Device Operating Envelope | **204"x 172"x 78"** | **(none permanent)** |

General Notes: Above requirements are Trainer Device specific. See other data for administrative & support spaces.

**STRUCTURAL**

Device installation transport method: casters
Device shipping weight = **2866** pounds, operating weight = **2701** pounds.
Floor loading in operating configuration with jack pads = **13.4** psi

**MECHANICAL**

| SPACE NAME | TEMPERATURE DEGREES (f) | HUMIDITY |
|---|---|---|
| Device/Trainee Area | **78** | **30** |

General Note: Refer to specific device equipment list for loads

TABLE 3.3 (Continued)
TRAINER FACILITIES DATA-F/A-18 Secondary Flight Control Trainer

**ELECTRICAL**

| | VOLTS | HZ | WIRE COUNT | PHASE | REMARKS |
|---|---|---|---|---|---|
| Device/Trainer | **120/208** | **60** | **5** | **3** | **7 KVA** |

**SAFETY**

Device/Trainee area: eyewash/shower and safety striping

**EQUIPMENT**

Hydraulic power unit:
supplied by: construction contractor
installed by: construction contractor

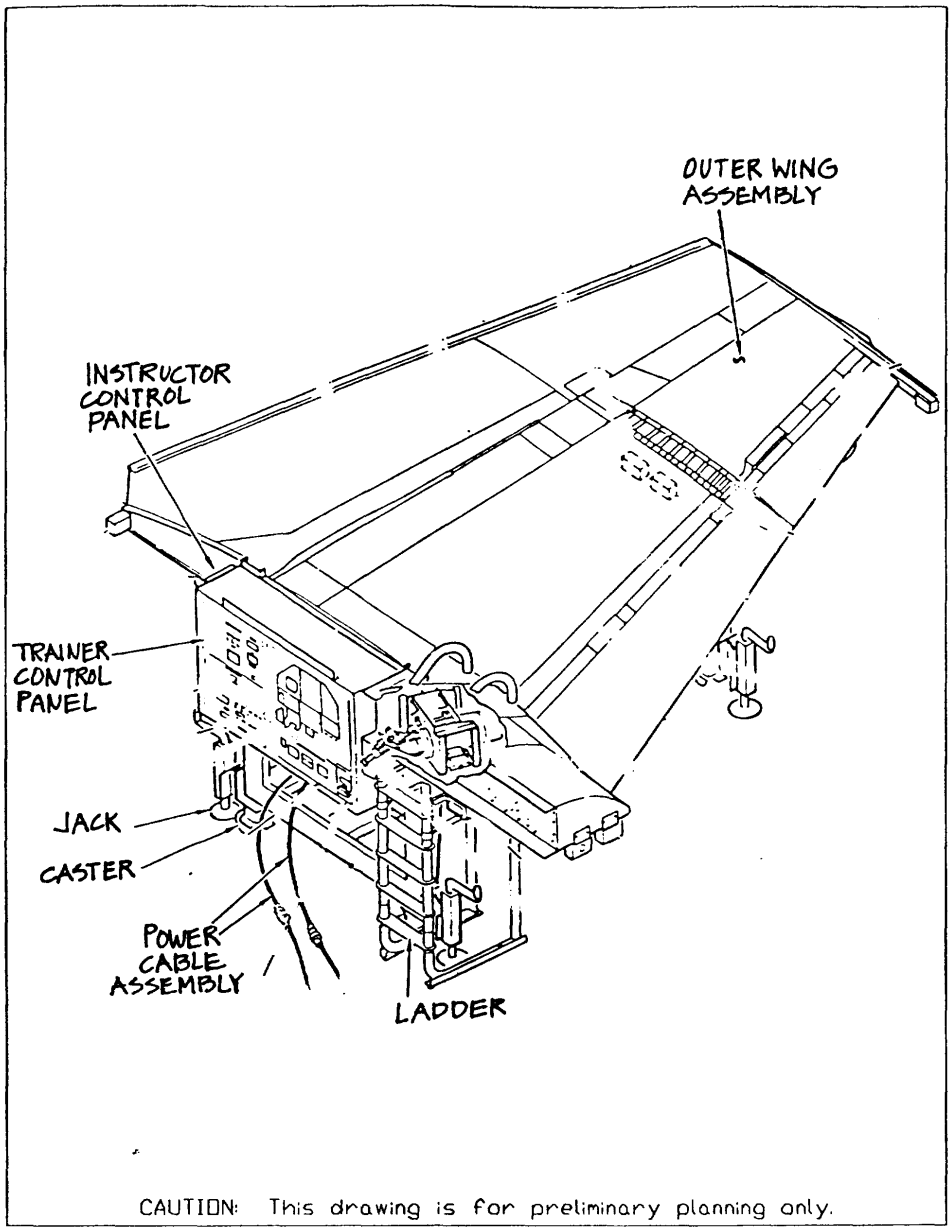


CAUTION: This drawing is for preliminary planning only.

| TITLE | DATE | FACILITY PLATE NO. | SHEET |
|---|---|---|---|
| F/A-18 SECONDARY FLIGHT CONTROLS TRAINER- ISOMETRIC | MAY 1992 | 171 20 | FA18 B2 |

Table 3.4
TRAINER FACILITIES DATA-F/A-18 Environmental Control System Trainer

Room dimensions shown are minimums unless noted.

**** CAUTION: This document is for preliminary planning only.****
****Verify with NAMTRAGRU Code N5 prior to use. ****

**REFERENCE DOCUMENTS**

Technical Manual F18-NAMT-01 Volume 1, Environmental Control System Trainer, 74D090001-1001 and 74D090001-1003, McDonnell Aircraft.

**ARCHITECTURAL**

| | MIN DIMENSIONS |
|---|---|
| Device Operating Envelope | |
| panel 1 | **225.5"x 127"x 101.6"** |
| panel 2 | **114.5"x 48.3"x 63.4"** |
| panel 3 | **54"x 35"x 63"** |

General Notes: Above requirements are Trainer Device specific. See other data for administrative & support spaces.

**STRUCTURAL**

Device installation transport method: casters
Device panel 1 operating weight = **5790** pounds, shipping weight = **6255** pounds.
Floor load for panel 1 in operating configuration with jack pads = **14.0** psi
Device panel 2 operating weight = **1295** pounds, shipping weight = **1635** pounds.
Floor load for panel 2 in operating configuration with jack pads = **6.5** psi
Device panel 3 operating weight = **565** pounds, shipping weight = **565** pounds.
Floor load for panel 3 in operating configuration with casters = **400** psi

Table 3.4 (Continued)
TRAINER FACILITIES DATA-F/A-18 Environmental Control System Trainer

**MECHANICAL**

Air Supply: **Nitrogen(Air), 50** psi

| | | |
|---|---|---|
| Pneumatic: | For panel 1 lift system | **80** psi-**10**scfm |
| | For panel 1 cockpit pressurization | **30** psi-**10**scfm |

General Note: Refer to specific device equipment list for loads.

**ELECTRICAL**

Panel 3 General Power:

| | VOLTS | HZ | WIRE COUNT | PHASE | REMARKS |
|---|---|---|---|---|---|
| To control box from facility | **120/208** | **60** | **5** | **3** | |
| | **120/208** | **400** | **4** | **3** | **9KVA** |

**SAFETY**

Device/Trainee area: eyewash/shower and safety striping

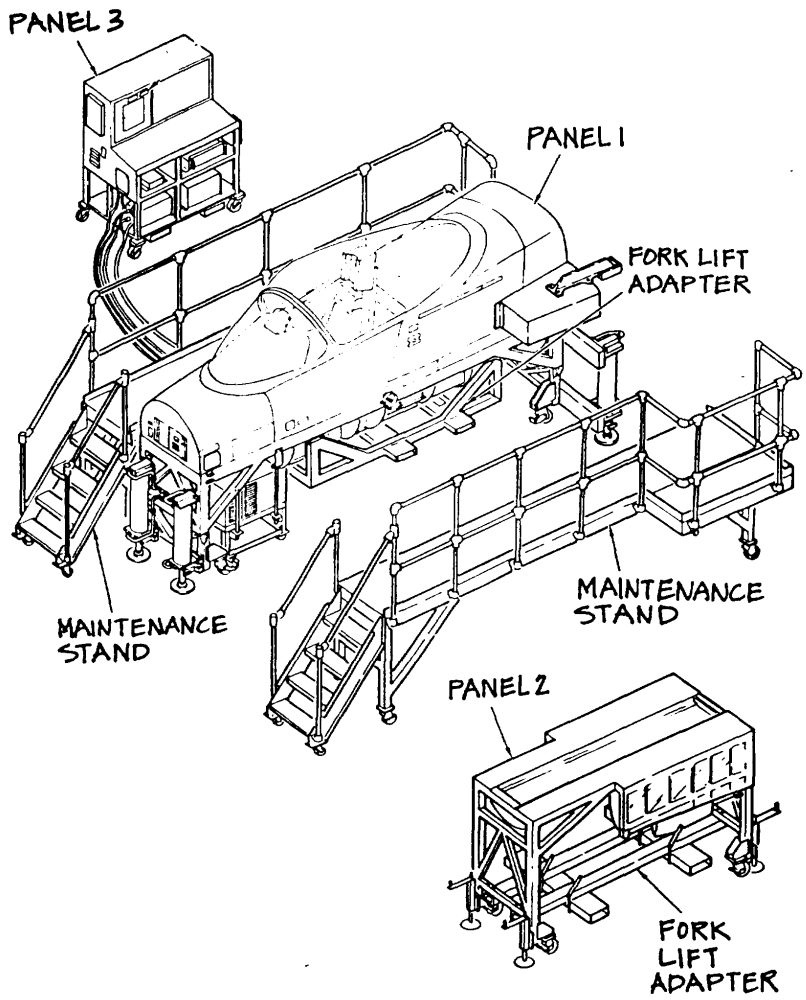


CAUTION: This drawing is for preliminary planning only.

| TITLE F/A-18 ENVIRONMENTAL CONTROL SYSTEM TRAINER ISOMETRIC | DATE MAY 1992 | FACILITY PLATE NO. 171 20 | SHEET FA18 B3 |
|---|---|---|---|

Table 3.5
TRAINER FACILITIES DATA-F/A-18 Primary Flight Controls Trainer

Room dimensions shown are minimums unless noted.

**** CAUTION: This document is for preliminary planning only.****
****Verify with NAMTRAGRU Code N5 prior to use. ****

**REFERENCE DOCUMENTS**

Technical Manual F18-NAMT-04 Volume 1, Primary Flight Controls Trainer, 74D090004-1001 and 74D090004-1003, and 74D09004-1005, McDonnell Aircraft.

**ARCHITECTURAL**

| | MIN DIMENSIONS (LWH or noted) |
|---|---|
| Device Operating Envelopes | |
| panel 1 | **130"x 98"x 78"** |
| panel 2 | **161"x 184"x 61"** |
| panel 3 | **58"x 36"x 61"** |

General Notes: Above requirements are Trainer Device specific. See other data for administrative & support spaces.

**STRUCTURAL**

Device installation transport method: casters
Device panel 1 operating weight = **1580** pounds, shipping weight = **1580** pounds
Device panel 2 operating wt = **3575** lb, shipping wt = **1690** pounds (each section)
Device panel 3 operating weight = **800** pounds, shipping weight = **800** pounds

Table 3.5 (Continued)
TRAINER FACILITIES DATA-F/A-18 Primary Flight Controls Trainer

**MECHANICAL**

Hydraulic: For panel 3 **3000** psi/**20** gpm.
Air Supply: **Nitrogen(Air)** **1500** psi
General Note: Refer to specific device equipment list for loads.

**ELECTRICAL**

| General Power | VOLTS | HZ | WIRE COUNT | PHASE | REMARKS |
|---|---|---|---|---|---|
| To control box from facility | **120/208** | **60** | **5** | **3** | **5KVA** |

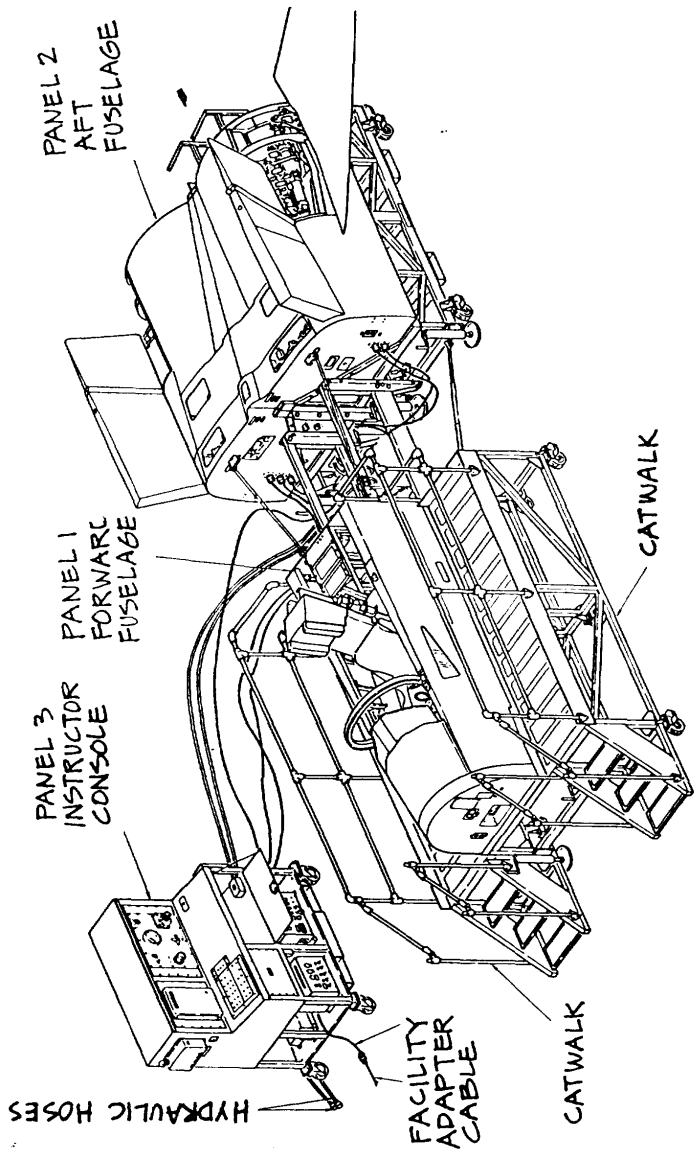


CAUTION: This drawing is for preliminary planning only.

| TITLE F/A-18 PRIMARY FLIGHT CONTROLS TRAINER ISOMETRIC | DATE MAY 1992 | FACILITY PLATE NO. 171 20 | SHEET FA18 B4 |
|---|---|---|---|

Table 3.6
TRAINER FACILITIES DATA-F/A-18 Fuel System (SAMT) Trainer

Room dimensions shown are minimums unless noted.

**** CAUTION: This document is for preliminary planning only.****
****Verify with NAMTRAGRU Code N5 prior to use. ****

**REFERENCE DOCUMENTS**

Technical Manual NAVTRADEV P-5148-1, dated 18 August 1988, F/A-18 FUEL SYSTEM SIMULATED AIRCRAFT MAINTENANCE TRAINER, DEVICE 11H105, ECC International Corp.

**ARCHITECTURAL**

| | MIN DIMENSIONS (LWH or noted) |
|---|---|
| Device Component sizes | |
| panel display #1 | **108"x 30"x 76"** |
| panel display #2 | **108"x 30"x 76"** |
| instructor station | **60"x 24"x 40"** |
| computer console | **29"x 29"x 67"** |
| UPS | **18"x 7"** |

General Notes: Above requirements are Trainer Device specific. See other data for administrative & support spaces.

**MECHANICAL**

| SPACE NAME | TEMPERATURE DEGREES (f) | HUMIDITY (per cent) |
|---|---|---|
| Device/Trainee Area | **39-100** | **80** (operating) **90** (non operating) |

General Note: Specific device equipment loads not available.

Table 3.6 (Continued)
TRAINER FACILITIES DATA-F/A-18 Fuel System (SAMT) Trainer

| ELECTRICAL | | | |
|---|---|---|---|
| General Power: | | | |
| | VOLTS | HZ | PHASE |
| From facility | 115 | 60 | 1 |

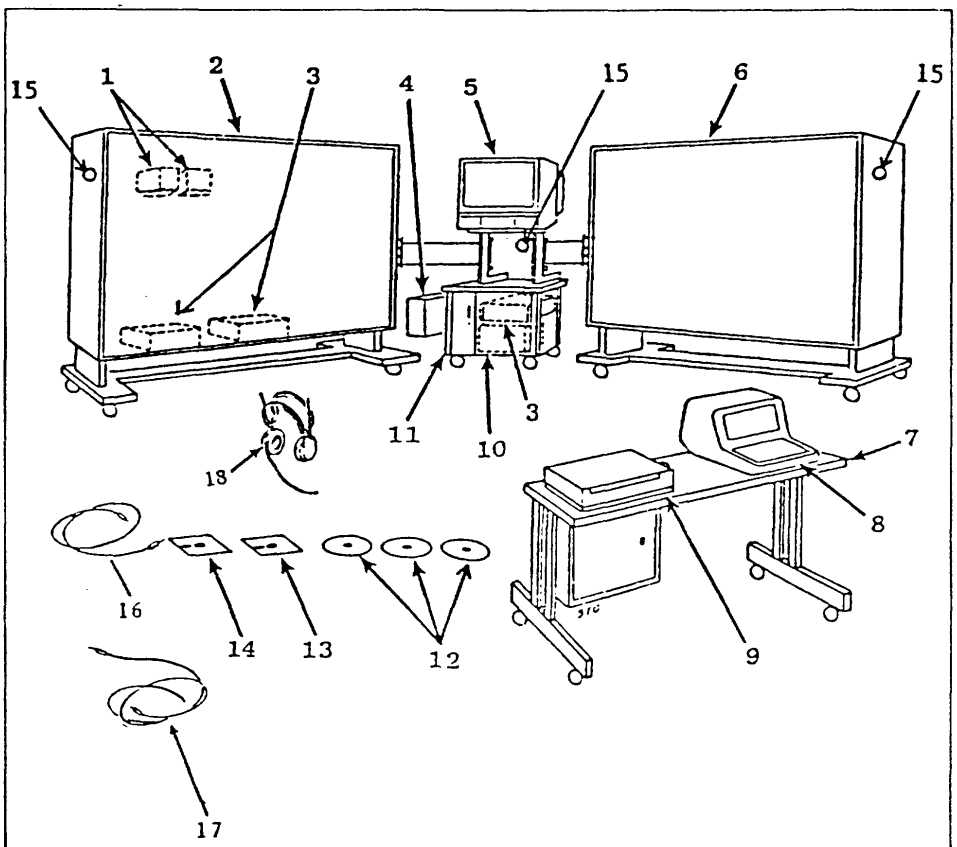


1. Digital display indicators (DDI)
2. Simulation panel 1 (SP1)
3. Videodisc player
4. Uninterruptable power source (UPS)
5. Video monitor
6. Simulation panel 2 (SP2)
7. Instructor station
8. Instructor CRT terminal
9. Printer
10. EC 3 computer
11. Control computer console
12. Videodisc player disc
13. Simulation program diskette
14. Procedural program diskette
15. Emergency Stop Switch
16. Red test lead
17. Black test lead
18. Head set

CAUTION: This drawing is for preliminary planning only.

| TITLE F/A-18 FUEL SYSTEM SIM AIRCRAFT MAINTENANCE TRAINER- ISOMETRIC | DATE MAY 1992 | FACILITY PLATE NO. 171 20 | SHEET FA18 B5 |
|---|---|---|---|

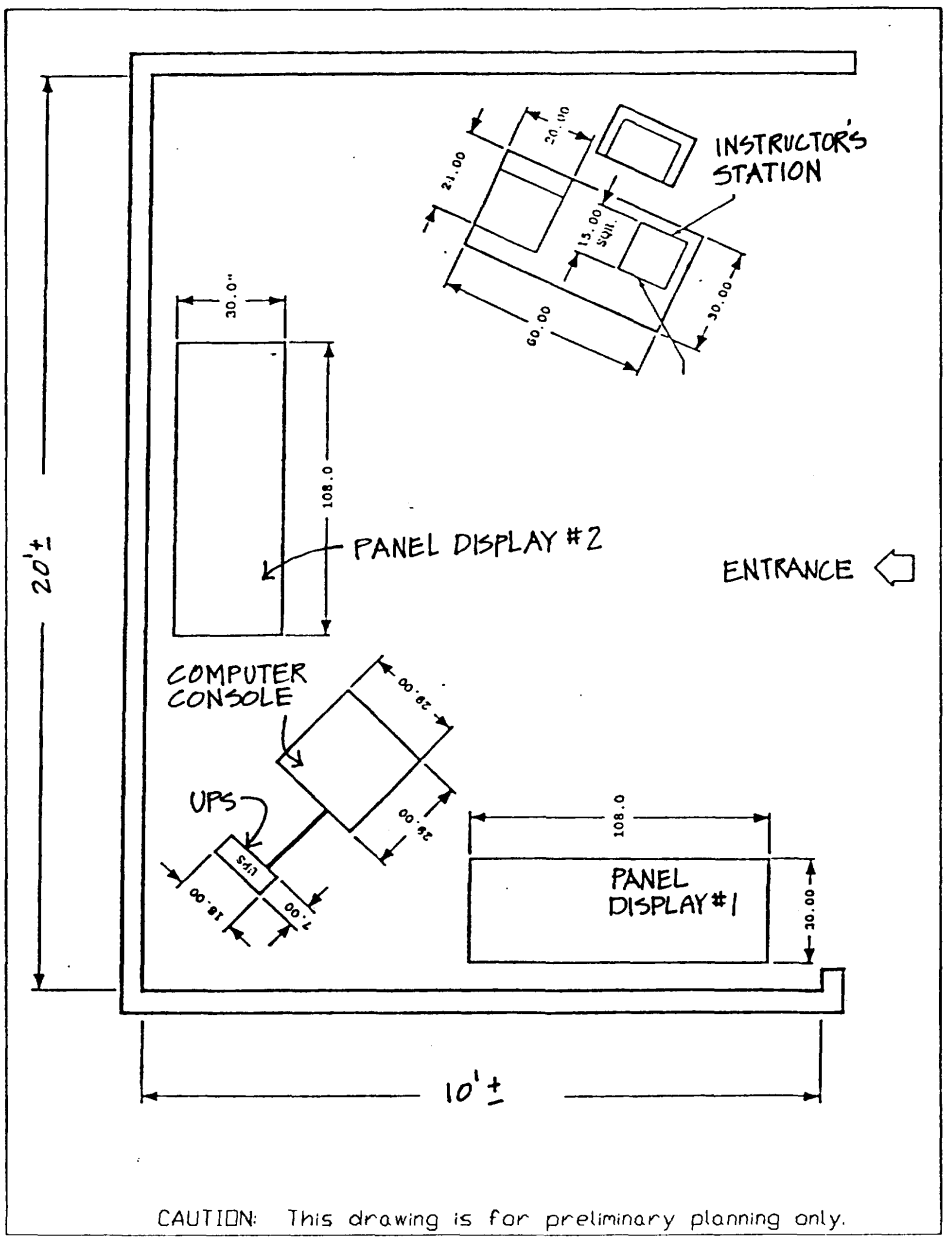


CAUTION: This drawing is for preliminary planning only.

| TITLE | DATE | FACILITY PLATE NO. | SHEET |
|---|---|---|---|
| F/A-18 FUEL SYSTEM SIM AIRCRAFT MAINTENANCE TRAINER- FLOOR PLAN | MAY 1992 | 171 20 | FA18 B6 |

Table 3.7
TRAINER FACILITIES DATA-F/A-18 Avionics System (SAMT) Trainer

Room dimensions shown are minimums unless noted.

**** CAUTION: This document is for preliminary planning only.****
****Verify with NAMTRAGRU Code N5 prior to use. ****

**REFERENCE DOCUMENTS**

Technical Manual NAVTRADEV P-5140-1, Revision A: dated 5 December 1986, F/A-18 AVIONICS SYSTEM SIMULATED AIRCRAFT MAINTENANCE TRAINER, DEVICE 11H103, Educational Computer Corporation.

**ARCHITECTURAL**

| | MIN DIMENSIONS (LWH or noted) |
|---|---|
| Trainee Area | **20'x 18'x 10'** |

General Notes: Additional space required for classroom. See other data for administrative and support spaces.

**STRUCTURAL**

System overall weight: **1200** pounds

**MECHANICAL**

| SPACE NAME | TEMPERATURE DEGREES (f) | HUMIDITY (per cent) |
|---|---|---|
| Device/Trainee Area | **60-90** | **50-90** (operating-non condensing) |

General Note: Specific device equipment loads not available.

Table 3.7 (Continued)
TRAINER FACILITIES DATA-F/A-18 Avionics System (SAMT) Trainer

**ELECTRICAL**

General Power:

| | VOLTS | WIRE COUNT | AMPERES | REMARKS |
|---|---|---|---|---|
| From facility | **220** | **3** | **20** | Note 1 |

Note 1: A 2510 or 2516 Hubbell receptacle is required at the above ratings. See Technical Manual for component electrical characteristics.

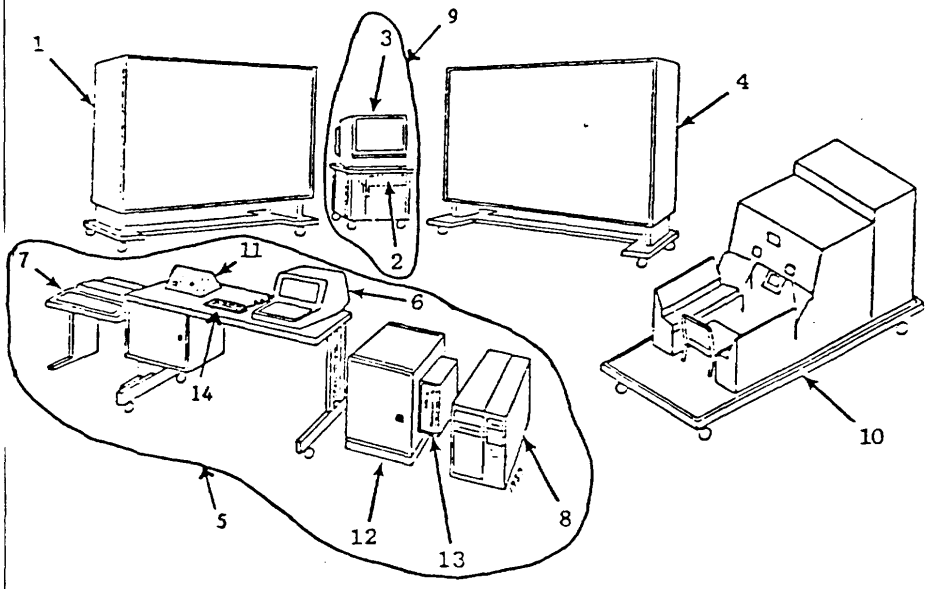


1. Simulation panel 1 (SP1)
2. Videodisc player
3. Video monitor/touchscreen
4. Simulation panel 2 (SP2)
5. Instructor station
6. Instructor CRT terminal
7. Printer
8. VAX computer
9. Student interactive display device (SIDD)
10. Cockpit
11. Radio communications controller
12. Graphics controller
13. Master ac power distribution unit
14. Keypad

CAUTION: This drawing is for preliminary planning only.

| TITLE F/A-18 AVIONICS SYSTEM-ISOMETRIC | DATE MAY 1992 | FACILITY PLATE NO. 171 20 | SHEET FA18 B7 |
|---|---|---|---|

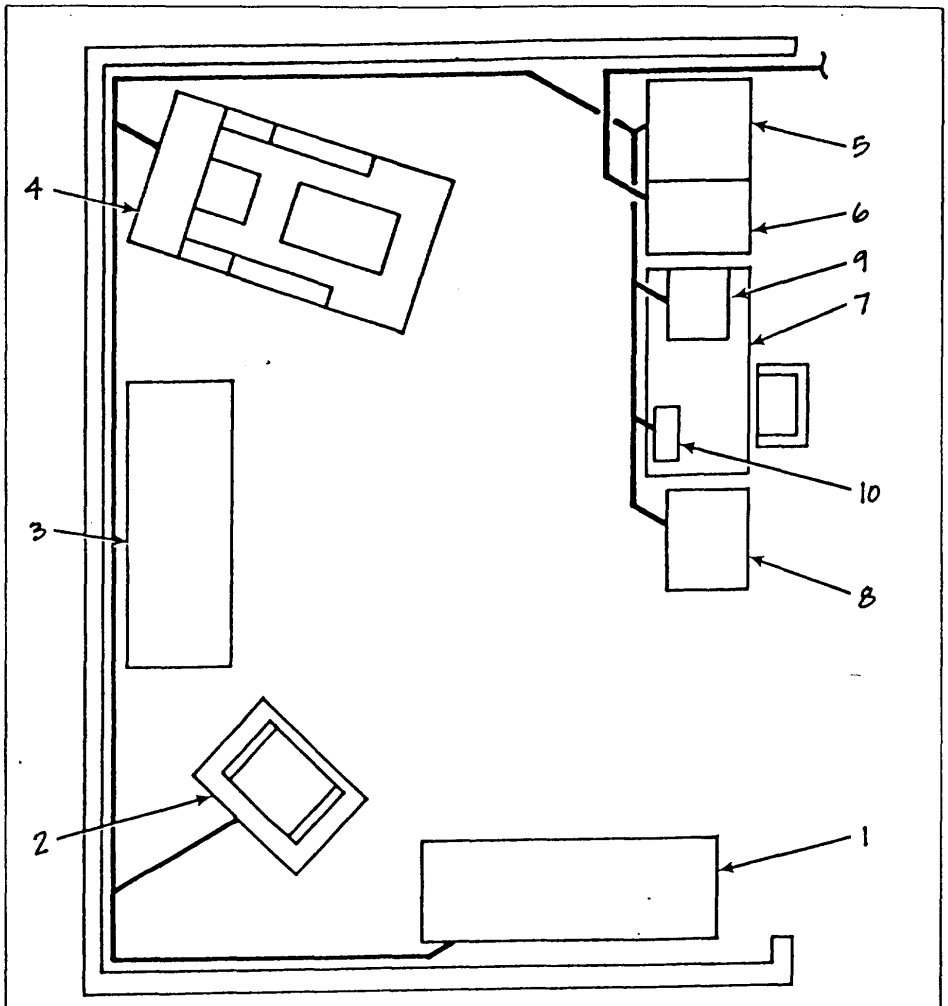


1. Simulation panel 1 (SP1)
2. Student interactive display device (SIDD)
3. Simulation panel 2 (SP2)
4. Cockpit
5. VAX computer
6. Graphics controller
7. Instructor station
8. Printer
9. CRT terminal
10. Radio communications controller

CAUTION: This drawing is for preliminary planning only.

| TITLE | DATE | FACILITY PLATE NO. | SHEET |
|---|---|---|---|
| F/A-18 AVIONICS SYSTEM-FLOOR PLAN | MAY 1992 | 171 20 | FA18 B8 |

Table 3.8
TRAINER FACILITIES DATA-F/A-18
Flight Control Electronics System (SAMT) Trainer

Room dimensions shown are minimums unless noted.

**** CAUTION: This document is for preliminary planning only.****
****Verify with NAMTRAGRU Code N5 prior to use. ****

**REFERENCE DOCUMENTS**

Technical Manual NAVTRADEV P-5136-1, 25 July 1988, F/A-18 FLIGHT CONTROL ELECTRONICS SYSTEM SIMULATED AIRCRAFT MAINTENANCE TRAINER, DEVICE 11H102, ECC International Corp.

**ARCHITECTURAL**

| | MIN DIMENSIONS (LWH or noted) |
|---|---|
| Trainee Area | **20'x 18'x 10'** |

General Notes: Additional space required for classroom. See other data for administrative and support spaces.

**STRUCTURAL**

System overall weight: **1200** pounds

**MECHANICAL**

| SPACE NAME | TEMPERATURE DEGREES (f) | HUMIDITY (per cent) |
|---|---|---|
| Device/Trainee Area | **60-90** | **50-90** (operating-non condensing) |

General Note: Specific device equipment loads not available.

Table 3.8 (Continued)
TRAINER FACILITIES DATA-F/A-18
Flight Control Electronics System (SAMT) Trainer

**ELECTRICAL**

General Power:

| | VOLTS | WIRE COUNT | AMPERES | REMARKS |
|---|---|---|---|---|
| From facility | **220** | **3** | **20** | Note 1 |

Note 1: A 2510 or 2516 Hubbell 2511-P receptacle is required at the above ratings. See Technical Manual for component electrical characteristics.

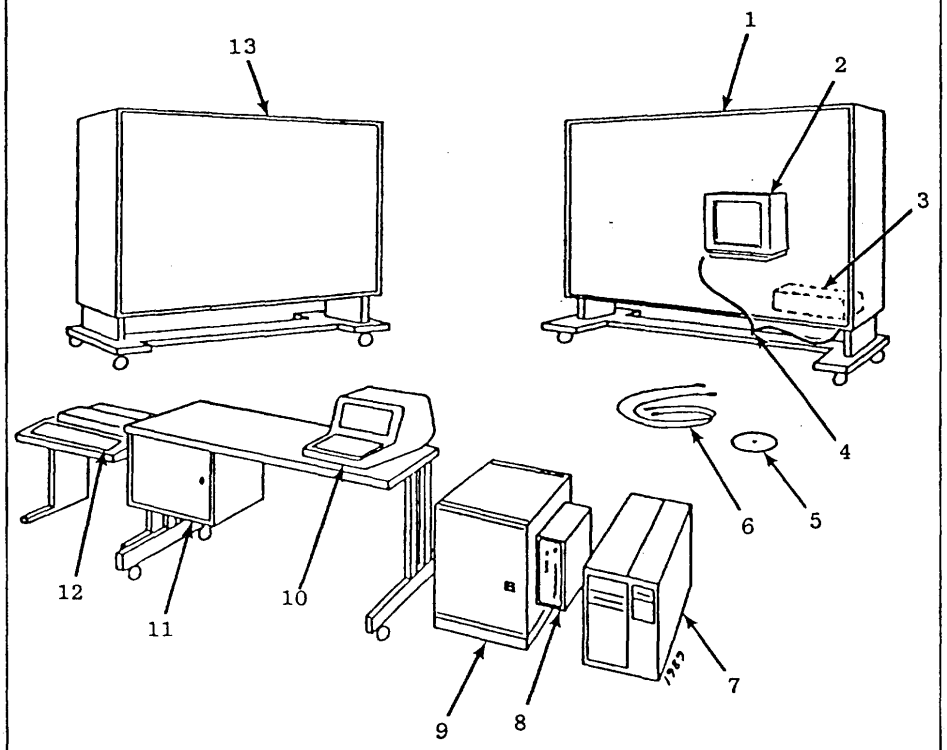


1. Simulation panel 2 (SP2)
2. Video monitor
3. Videodisc player
4. Student interactive display device (SIDD)
5. Videodisc player disc
6. Test Leads
7. VAX computer
8. Master AC Power Distribution Unit
9. Graphics Rack
10. Instructor CRT terminal
11. Instructor station
12. Printer
13. Simulation panel 1 (SP1)

CAUTION: This drawing is for preliminary planning only.

| TITLE | DATE | FACILITY PLATE NO. | SHEET |
|---|---|---|---|
| FLT CNTRL ELECTRONICS SYS SIMULATED AIRCRAFT MAINT TRAINER- ISOMETRIC | MAY 1992 | 171 20 | FA18 B9 |

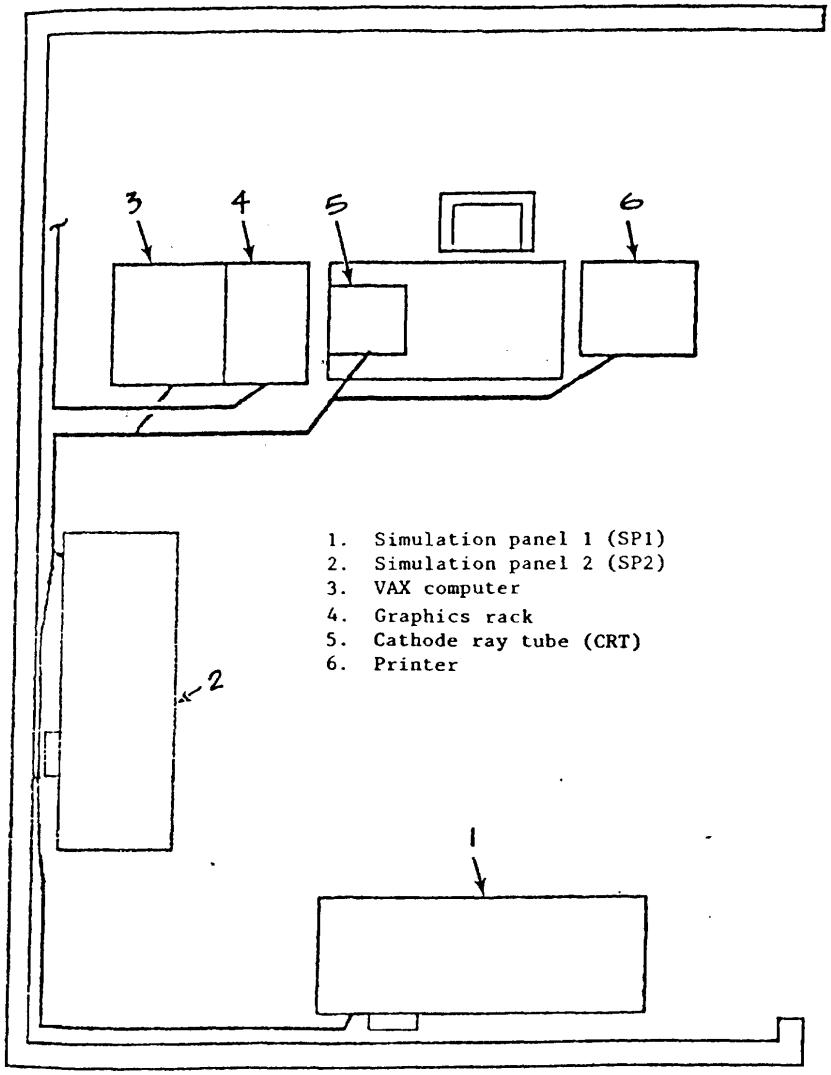


CAUTION: This drawing is for preliminary planning only.

| TITLE | DATE | FACILITY PLATE NO. | SHEET |
|---|---|---|---|
| FLT CNTRL ELECTRONICS SYS SIMULATED AIRCRAFT MAINT TRAINER- FLOOR PLAN | MAY 1992 | 171 20 | FA18 B10 |

Table 3.9
TRAINER FACILITIES DATA-F/A-18 Armament System (SAMT) Trainer

Room dimensions shown are minimums unless noted.

**** CAUTION: This document is for preliminary planning only.****
****Verify with NAMTRAGRU Code N5 prior to use. ****

**REFERENCE DOCUMENTS**

Technical Manual NAVTRADEV P-5144-1, change 5: 6 November 1987, F/A-18 ARMAMENT SYSTEM SIMULATED AIRCRAFT MAINTENANCE TRAINER, DEVICE 11H104, ECC International Corp.

**ARCHITECTURAL**

| | MIN DIMENSIONS (LWH or noted) |
|---|---|
| Trainee Area | **20'x 18'x 10'** |

General Notes: Additional space required for classroom. See other data for administrative and support spaces.

**STRUCTURAL**

System overall weight: **1200** pounds

**MECHANICAL**

| SPACE NAME | TEMPERATURE DEGREES (f) | HUMIDITY (percent) |
|---|---|---|
| Device/Trainee Area | **39-100** | **80** (operating-non condensing) |

General Note: Specific device equipment loads not available.

Table 3.9 (Continued)
TRAINER FACILITIES DATA-F/A-18 Armament System (SAMT) Trainer

**ELECTRICAL**

General Power:

| | VOLTS | WIRE COUNT | AMPERES | REMARKS |
|---|---|---|---|---|
| From facility | **115** | **3** | **20** | Note 1 |

Note 1: A standard three-prong receptacle is required at the above ratings to mate with a Hubbell #8215-C. See Technical Manual for component electrical characteristics.

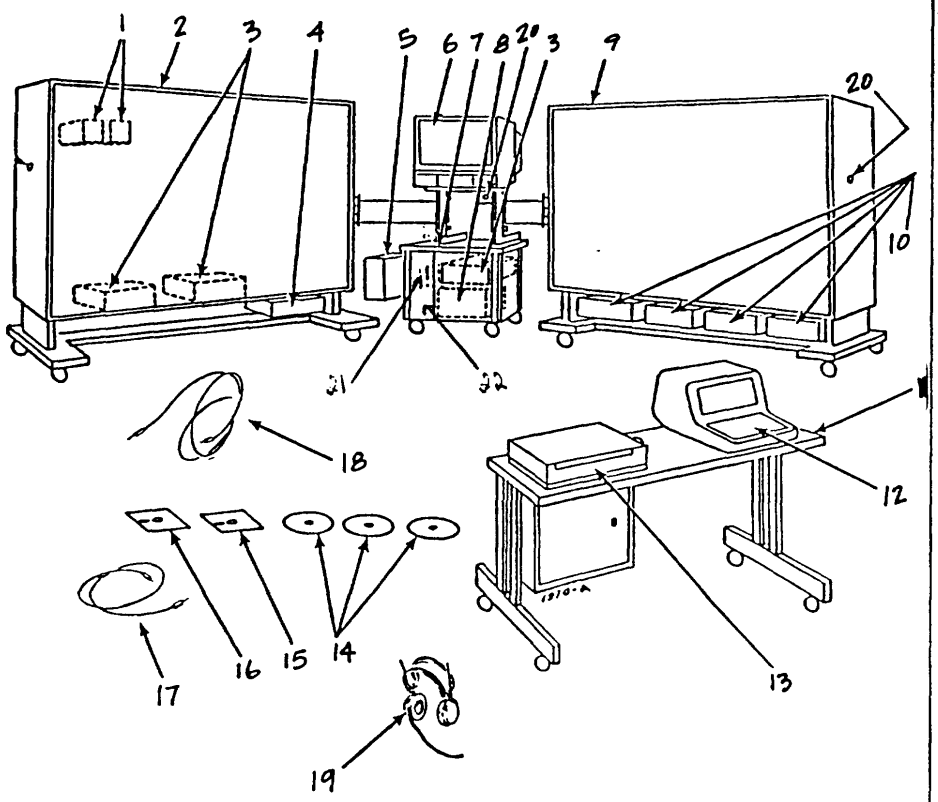


1. Digital display indicators (DDI)
2. Simulation panel 1 (SP1)
3. Videodisc player
4. Enclosure
5. Uninterruptable power source (UPS)
6. Video monitor
7. Control computer console (CCC)
8. EC 3 computer
9. Simulation panel 2 (SP2)
10. Test sets
11. Instructor station
12. Instructor CRT terminal
13. Printer
14. Videodisc player disk
15. Simulation program diskette
16. Procedural program diskette
17. Red test lead
18. Black test lead
19. Audio headset
20. Emergency stop switch
21. Upper diskette drive
22. Lower diskette drive

CAUTION: This drawing is for preliminary planning only.

| TITLE ARMAMENT SYSTEM SIMULATED AIRCRAFT MAINT TRAINER- ISOMETRIC | DATE MAY 1992 | FACILITY PLATE NO. 171 20 | SHEET FA18 B11 |
|---|---|---|---|

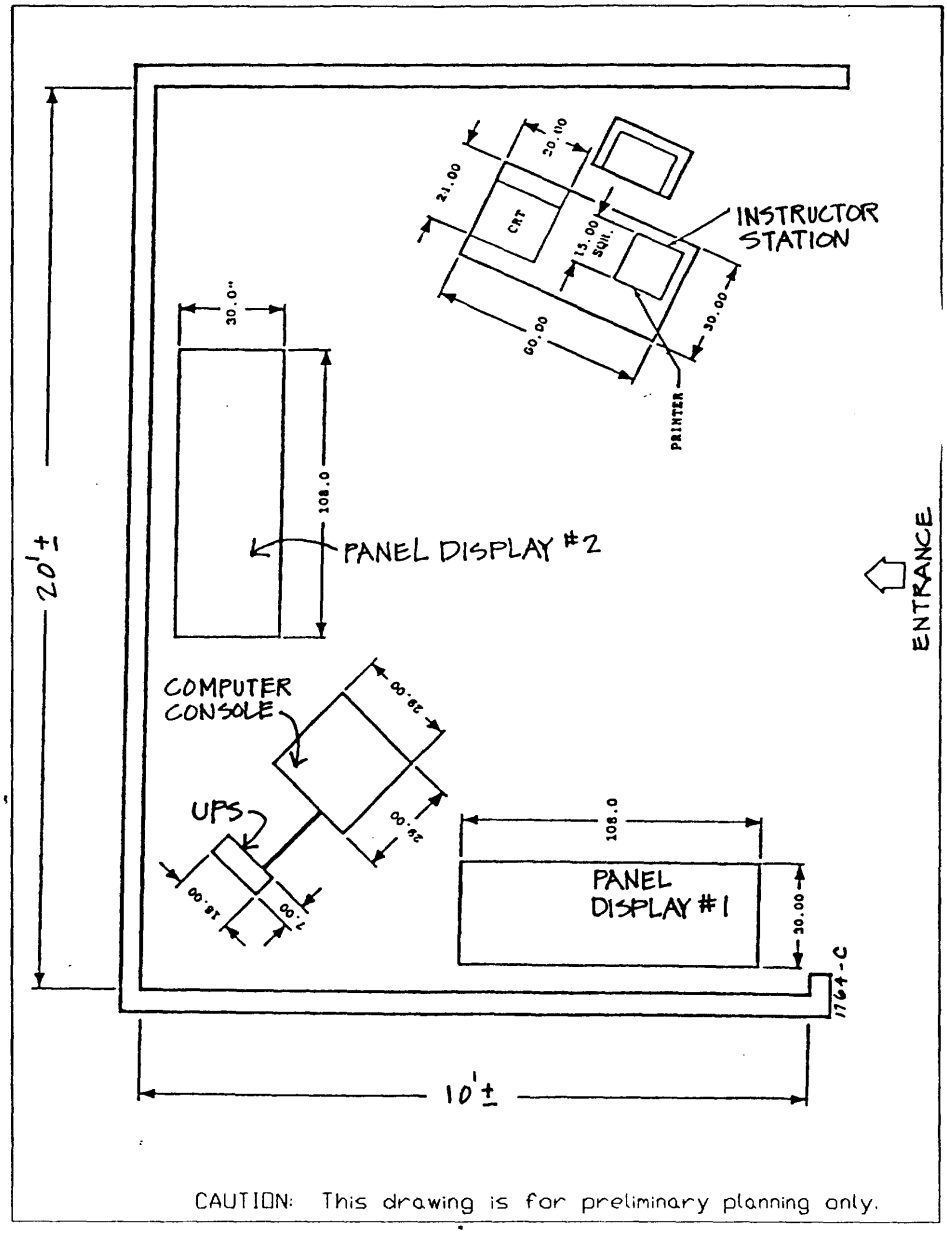


CAUTION: This drawing is for preliminary planning only.

| TITLE ARMAMENT SYSTEM SIMULATED AIRCRAFT MAINT TRAINER- FLOOR PLAN | DATE MAY 1992 | FACILITY PLATE NO. 171 20 | SHEET FA18 B12 |
|---|---|---|---|

Table 3.10
TRAINER FACILITIES DATA-F/A-18 Hydraulic System

Room dimensions shown are minimums unless noted.

**** CAUTION: This document is for preliminary planning only.****
****Verify with NAMTRAGRU Code N5 prior to use. ****

**REFERENCE DOCUMENTS**

Technical Manual F18-NAMT-06 Volume 1, Hydraulic System Trainer, 74D0090006-1001 and 74D090006-1003, McDonnell Aircraft.

**ARCHITECTURAL**

| | MIN DIMENSIONS (LWH or noted) | OCCUPANT COUNT | SPECIAL DOOR | NOISE LEVEL |
|---|---|---|---|---|
| Device/Trainee Area. | **29'x 30'x 10'** | 10 | 21'x30' | 65db |
| Device Operating Envelope | **118"x 124"x 104"** | 0 | none | 65db |

General Notes: Above requirements are Trainer Device specific. See other data for administrative & support spaces.

**STRUCTURAL**

Device installation transport method: casters
Device shipping weight = **1713** pounds, operating weight = **1550** pounds.
Floor loading in operating configuration with jack pads = **7.7** psi

**MECHANICAL**

| SPACE NAME | TEMPERATURE DEGREES (f) | HUMIDITY |
|---|---|---|
| Device/Trainee Area | 78 | 30 |

Hydraulic pressure/flow rate: **3000** psi/**1** gpm. Use MIL-H-83282.
Air Supply: **Nitrogen(Air)**

Table 3.10 (Continued)
TRAINER FACILITIES DATA-F/A-18 Hydraulic System

**ELECTRICAL**

| | VOLTS | | HZ | WIRE COUNT | AMPERES PER PHASE A | B | C | REMARKS |
|---|---|---|---|---|---|---|---|---|
| Device/Trainer | **120/208** | **60** | **5** | **0.10** | **0.05** | **0.05** | standby | |
| | | | | | **1.20** | **0.05** | **0.30** | start |
| | | | | | **0.80** | **0.05** | **0.20** | operate |

**SAFETY**

Device/Trainee area: eyewash/shower and safety striping

**EQUIPMENT**

Hydraulic power unit:
supplied by: construction contractor
installed by: construction contractor

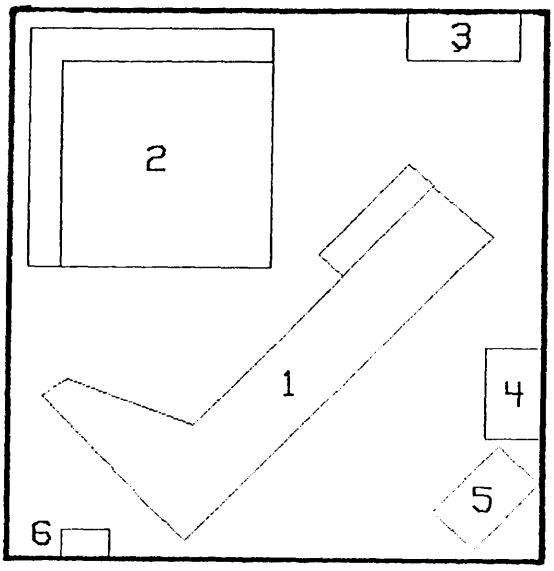


1. HYDRAULIC SYSTEM SAMT (36X78X282)
2. HYDRAULIC SYSTEM TRAINER (108X156X156)
3. BENCH (30X72)
4. DESK (36X60)
5. CONTROL CONSOLE (36X60)
6. LOCKER (18X30)

NOTE: ALL DIMENSIONS ABOVE ARE IN INCHES

ROOM SIZE = 29 FEET X 30 FEET AREA = 870 SQUARE FEET

1/8" = 1'-0" 5' 0 5' 10' 15' 20' 25'

CAUTION: This drawing is for preliminary planning only.

| TITLE | DATE | FACILITY PLATE NO. | SHEET |
|---|---|---|---|
| F/A-18 HYDRAULIC SYSTEM TRAINER ROOM FLOOR PLAN | MAY 1992 | 171 20 | FA18 B13 |

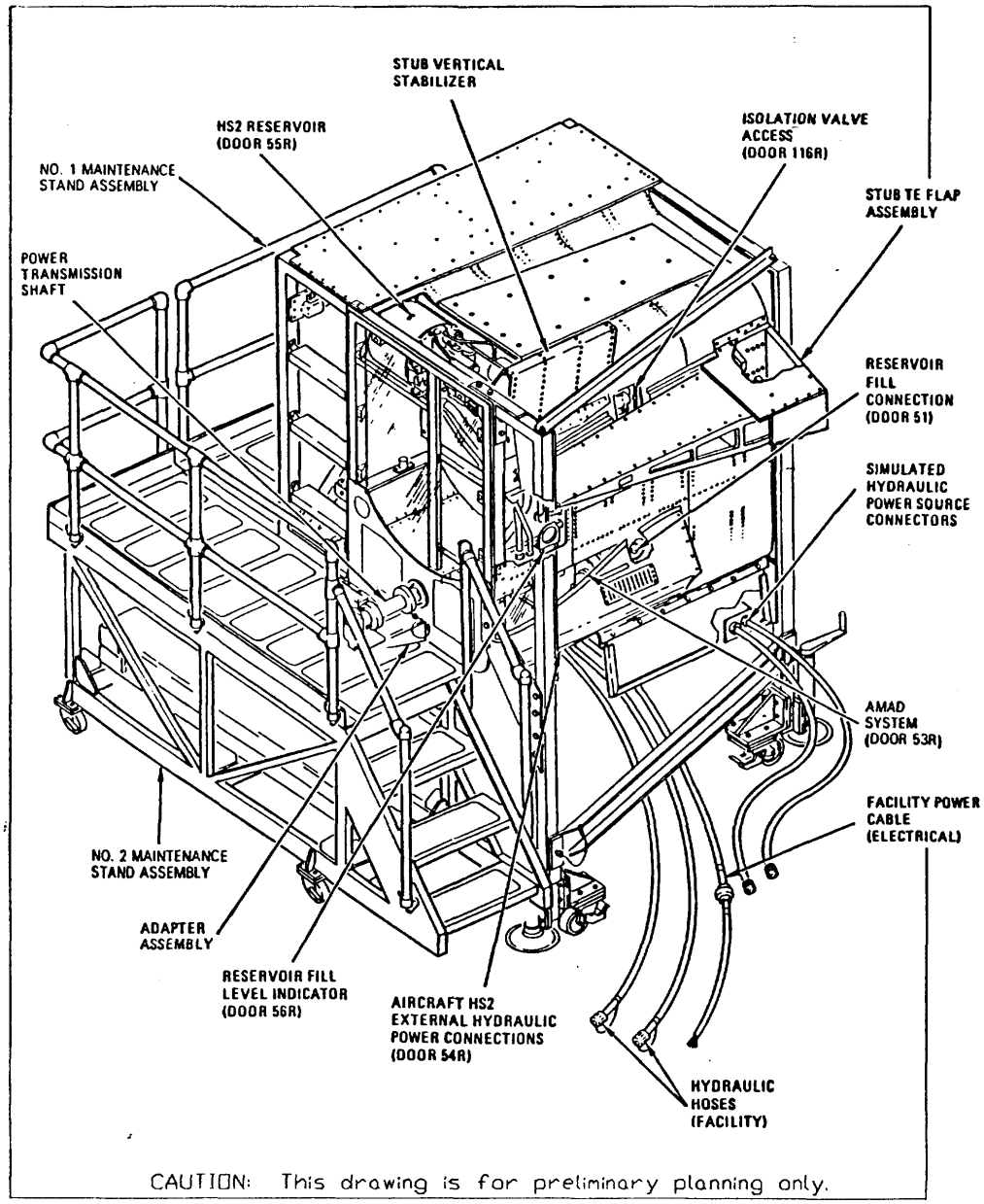


CAUTION: This drawing is for preliminary planning only.

| TITLE F/A-18 HYDRAULIC SYSTEM - TRAINER ISOMETRIC | DATE MAY 1992 | FACILITY PLATE NO. 171 20 | SHEET FA18 B14 |
|---|---|---|---|

## Section 4: AVIATION SURVIVAL TRAINING CENTER FACILITIES

4.1 Functional Requirements. Aviation survival training involves the use of classrooms, hands-on training and training devices, such as hypobaric chambers and ejection seat trainers. Training is normally conducted four days per week for designated Naval Aviators and others as required.

On-site facilities for medical emergencies will be dependent upon the proximity and accessibility of local medical facilities. Likewise, on-site facilities to accommodate physical training such as locker rooms and showers will be dependent on the proximity of such facilities in the vicinity.

4.2 Facility Design. General planning criteria for survival training facilities can be found in P-80 under Category Code 171 in Chapter 2, Section 1. In addition to the "Total Team Pre-Design Process" session project team as described in paragraph 1.5, include the Office of the Assistant Secretary of Defense (Health Affairs) Defense Medical Facilities Office [OASD(HA)DMFO]; the Bureau of Medicine Surgery (BUMED) Codes 02 and 43; Naval Healthcare Support Office (HSO) MCLO; (NAMI) Code 11 and NAVFAC Medical Facilities Design Office (MFDO) Code 09MD. Physiological training facilities may typically use large pressure vessels requiring special access and maneuvering space. Assess the frequency of removal of large devices to determine whether operable doors or knock-out panels are appropriate for retrieval. Device design accommodation, operation and maintenance support, training techniques, medical safety and future modification to the equipment are prime design considerations for physiological training facilities.

Future growth is not likely, due to the limitations in throughput based on capacities of the training devices.

4.2.1 Site Planning. Base the siting on a thorough investigation and analysis of the existing physical conditions of the land and the functional requirements of the project. The site must provide adequate truck turnaround and maneuvering space for the installation and removal of training equipment; however, this space will be used for that purpose very infrequently. When not being used for equipment installation and removal, the maneuvering space can be used for other purposes, such as extra parking. Designated staff parking spaces are recommended convenient to the building entry. Place structure(s) and paved areas to minimize disruption to any existing utilities.

Due to the inherent dangers with physiological training, the site should be located near facilities where immediate emergency treatment can be obtained. Provide direct internal emergency access route to critical areas of the facility.

4.2.2 Architectural. Place emphasis on simple, straightforward functional solutions to both interior and exterior design and detailing. Careful interior planning and design are necessary to ensure the most effective learning environment. Space planning should result in a Furniture/Equipment Footprint with life safety considerations complying with NFPA 101.

Massing for physiological training facilities is affected by the high bay spaces for certain training devices, such as parachute trainers, hypobaric chambers and ejection seat trainers. Provide adequate floor to structure clearances. If handled properly, excessive numbers of roof levels can be avoided by grouping high bays. High bay areas must support excursion limits of equipment, such as ejection seat and parachute trainers. Set height of the high bay area on the highest excursion limit anticipated in proposed training device(s) and on clearances for overhead crane during installation/removal and operation. Seismic design may require limits on the height of structures and special design configurations. Follow guidelines given in MIL-HDBK-1001/1.

4.2.2.1 Adjacency. Place high bay areas of the same or nearly equal height adjacent to each other and combine into one level for simplification of roofing and structural systems and resultant cost savings.

4.2.2.2 Circulation. Circulation patterns and intensity vary among aviation training facility types. Varying numbers of administrative personnel, contract personnel, trainees, and instructors contribute to the pedestrian traffic load. Separate trainee circulation patterns from instructors where possible. Physiological training facilities typically support heavy trainee pedestrian traffic. Identify excursion limits of all training equipment near circulation paths to eliminate dangers to personnel. Direct emergency access by medical personnel is required in critical training areas.

4.2.2.3 Functional Priorities. The most important sections of the facility are those that are directly required to perform the training mission. Other portions of the facility are secondary. Space groupings in order of importance are:

a) Training rooms (e.g., classrooms, trainer rooms, etc.) required to perform the training.

b) Direct support spaces, such as storage rooms for classroom materials, mechanical equipment rooms, instructors' offices, etc., without which the training would be degraded or impossible to perform.

c) Indirect support spaces, such as lounges and administrative offices, without which training can be accomplished, but at a cost in the efficiency of the training organization.

4.2.2.4 Spaces and Characteristics

Aviation Physiologist Office(s). Provide private administrative space. See collateral equipment list for furnishings.

Aviation Physiology Technician Office(s). Provide private administrative space. See collateral equipment list for furnishings.

Aviation Survival Equipmentman Office. Provide private administrative space. See collateral equipment list for furnishings.

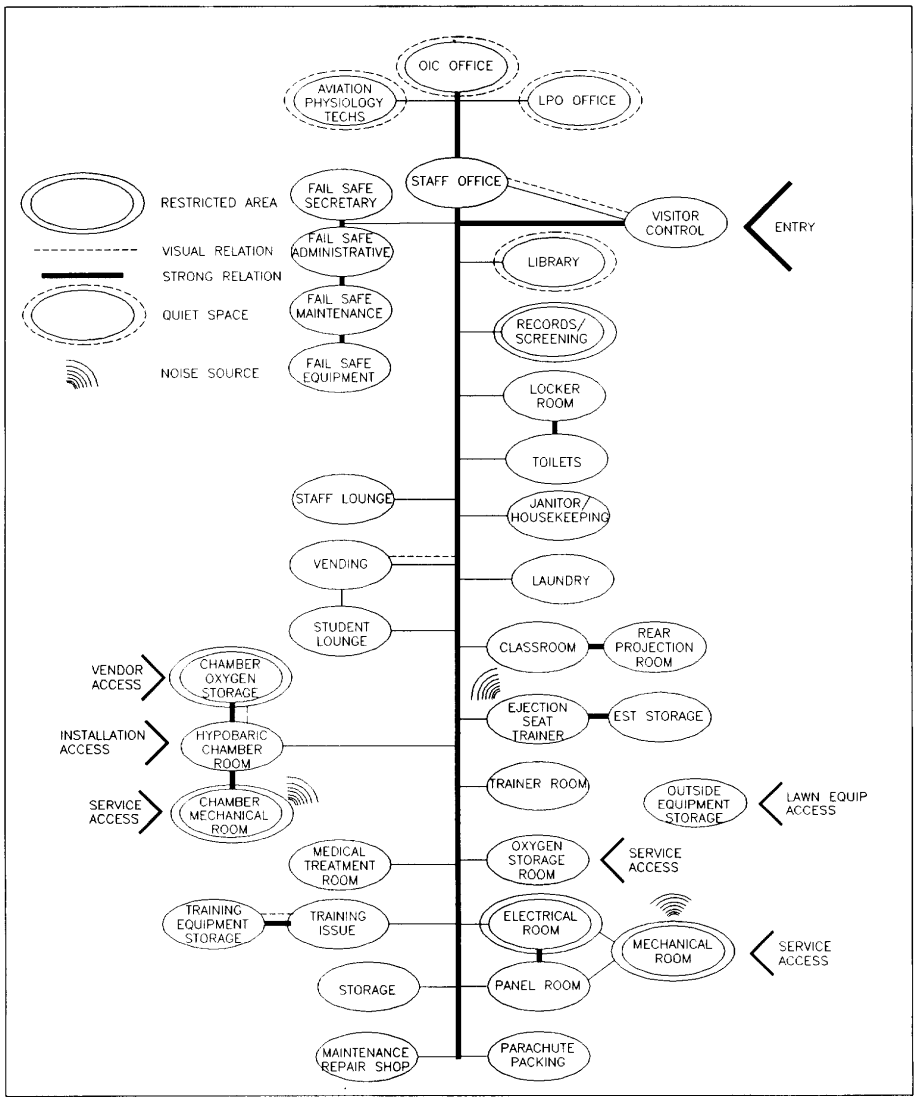


FIGURE 3
AVIATION PHYSIOLOGICAL TRAINING UNIT BUBBLE DIAGRAM

Classroom. Class sizes for small ASTC's are 6 to 8 students per day, with a staff of 8 to 10 personnel; medium sized units have 12 to 14 students per day and a staff of 10 to 12 personnel; large units have approximately 36 students daily and a staff of 18 to 22. Groups outside the building occasionally use the classrooms. Accommodate any special needs cited by the Officer-in-Charge. Seating arrangement is the most important factor in determining the size and shape of a classroom. Accommodate any special requirements for static and operative displays and team teaching, such as small, medium, and/or large class seating arrangement flexibility within the same classroom boundaries. Fixed seating tiers can decrease flexibility. Use of maps and fold out materials by trainees may require seating at tables. Optimize the classroom sizes and shapes for flexibility and enhancement of instruction. Avoid "pie shape" and other configurations which limit alternate seating arrangements. Determine seating types and audiovisual characteristics before finalizing configuration. The length required for the front marker board also affects the shape and orientation of the room. Refer to Timesaver Standards for Building Types, 2nd Edition, (McGraw-Hill Book Company) for detailed data on seating arrangements.

Aviation training facilities typically use training devices requiring mechanical systems support. Consequently, classrooms are often exposed to a variety of support equipment noises in addition to HVAC unit noise which can distract from instruction. Provide sound baffles, absorbent materials at noise sources, and locate mechanical units remote from classrooms. Avoid sound masking in classrooms. Acoustic design level for classrooms should be RC-30 with 50 STC (minimum) walls. Provide sound absorbing materials in lecture rooms to limit reverberation time to 1.0 second, and provide sound-reflecting surfaces on the forward ceiling and wall surfaces for sound reinforcement. Consider the following major factors for design of classrooms:

1) Seating types and arrangements and writing surfaces

2) Space and furnishings for the lecturer

3) The use of wall space, including teaching aids and windows

4) Projection and TV facilities

5) Coat racks, storage and other conveniences

6) Acoustics and lighting

7) Heating, ventilating and air conditioning

8) Aesthetic considerations

Provide acoustically rated accordion folding panel partitions with integral door where flexibility is desirable for subdividing classrooms. Extend details above finished ceiling to assure integrity of specified sound transmission class (STC) in the interstitial space.

Portions of survival training involve hands-on mockups and display of survival gear. TV monitors and special projection systems in addition to traditional marker boards or porcelain boards may be used. Refer to

paragraph entitled "Audiovisual Requirements." Locate podium outside the field of view for the projection screen. Porcelain marker boards are preferred over "chalkboards." Include a display rail with clip fasteners. Wall perimeter tack strips should be provided for graphic display, such as maps and charts. Provide lockable storage space for items such as student guides, training aids, small portable mockups and trainers. Limit storage areas for audiovisual equipment to those items dedicated to each classroom.

Clerical Staff spaces. An open office partition plan in administrative areas should be used for economy of space and open intra-office communications. The area also serves as records storage. An acceptable path of travel must be established per NFPA 101 for fire exiting. Provide sound absorbing materials as required in office areas. Refer to MIL-HDBK-1034 for additional data.

Corridors. Set the width of corridors considering trainee occupancy loads and exiting and heavy circulation points, such as stairways and vending areas. Base minimum width dimensions on building occupancy, complying with NFPA 101 and minimum width of equipment maneuvering space, whichever is greater. Where lockers are not provided, locate coat and foul weather gear hanging areas near entrance in recessed alcoves or in student lounges.

Ejection Seat Trainer. Provide clearances for full excursion limits. Allow adequate floor space clearance for lowering ejection seat track and replacing seat. Provide for nitrogen bottle and additional seat storage.

Electrical Room. This space contains the facility main distribution panel, sub-distribution panels and step down transformers required for the operation of the facility. Frequency converter and telephone panelboard should be in a separate room. Do not combine the Electrical Room with the Mechanical Room.

Ejection Seat Storage.

FAILSAFE Administrative. See collateral equipment list for furnishings.

FAILSAFE Equipment.

FAILSAFE Secretary. Provide private administrative space. See collateral equipment list for furnishings.

FAILSAFE Maintenance.

Four-line release parachute trainer. The four-line release system demonstrator has been used in the parachuting techniques portion of both water survival and ejection seat training. Provide adequate overhead structural support for the trainer.

Hypobaric Chamber Oxygen Storage. Locate oxygen storage bottles in a dedicated fire rated area separate from the training area. Determine appropriate storage rack configuration. Typical storage capacity is 18 cylinders at 300 cubic feet each.

Hypobaric Chamber Toilet. Locate a unisex handicapped accessible toilet near the hypobaric chamber.

Hypobaric Chamber Mechanical Room. This space contains the vacuum pump and both the shop and medical air compressors. The hypobaric pump system is supplied with the trainer device. Since equipment furnished by both device contractor and construction contractor may be located in the same space, determine interface points between the two. Provide adequate space for operation, maintenance, and servicing of equipment including access to both the interior and exterior of the building. Pump rooms may require high ceilings to allow maintenance access with a permanent or temporary overhead crane to assist in the maintenance and repair.

Isolate floors and acoustically treat walls and doors where the source of vibration and sound can adversely affect adjacent spaces. Isolate the noise transmitted through to the chamber area. Avoid locating pump rooms on upper levels where sound can reverberate through structural systems.

Hypobaric Chamber Room. Provide exterior double doors for medical emergency access and implosive venting. Comply with NFPA 99B, Hypobaric Facilities. The need for utility trenches is rare, but must be assessed for each project based on the equipment needs.

Janitor/Housekeeping. Provide adjustable shelving and storage space for cleaning equipment and supplies, mop rack, and a deep sink or mop receptor.

Library. This space provides information and resources. In addition to books, the learning center may contain records, tapes and film. Some facilities may need reading areas. Provide storage for Navy publications and rate-training manuals. Acoustic controlling materials are necessary to ensure a quiet environment. This room may also function as the administrative conference room.

Lobby. While accommodating any memorabilia provided by the user, utilize wall area for a bulletin board and building directory and avoid oversizing corridors and entry areas for static teaching displays. An entrance vestibule is recommended for energy conservation, including a recessed scuff area for control of debris from foot traffic.

Locker Room. Provide 1 full height locker and clothes hook for each military staff person and garment changing area with wall mounted number 8 finish stainless steel mirror. Provide permanent built-in curb mounted lockers except where future flexibility is required. Minimize blind spots and/or visual obstructions except as required for privacy.

LCPO/LPO Office. Private administrative type office is required for the senior enlisted supervisor with a wall mounted key locker. See collateral equipment list for furnishings.

Maintenance Repair Shop. Various power tools are used here by the device contractor. Repairs are made here to aviation life support equipment. Refer to collateral equipment list.

Mechanical Room. This space normally contains the facility related heating, ventilating and air conditioning (HVAC) equipment as well as the sprinkler valves and piping. Area requirement for facility HVAC equipment is typically 5 percent of gross floor space; however, the requirement can vary depending on space criteria and other factors such as use of a basewide steam system. Mechanical rooms typically contain a variety of equipment types which must be accommodated early in the design. Avoid locating rooms with HVAC equipment on upper levels where sound can reverberate through structural systems. Provide adequate access space around equipment for operation, maintenance, and servicing. Locate hydraulic and pneumatic equipment which support the trainer devices in a separate pump room due to air contaminants, noise, and safety considerations.

Medical Treatment Room. Provide cabinets and hospital type sink in counter with gooseneck faucet and sprayer.

Night Vision Trainer Room. The scale model trainer is located here along with a 20 feet eye lane. Lightproofing is required.

Officer in Charge (OIC) Office. This office accommodates the person responsible for controlling the use of the facility, scheduling the use of classrooms and training devices and maintaining curriculum. Visual access to the administrative area is desirable with privacy blinds. See collateral equipment list for furnishings.

Outside Equipment Storage. Provide space for lawn maintenance equipment where required and flammable storage lockers.

Oxygen Storage Room. Provide appropriate racks for approximately 18 oxygen bottles.

Rear Projection Room. Provide if desired by the model manager. Locate between classrooms where possible to conserve space.

Staff/Student Lounge. Provide a minimum 7 feet wide base counter and cabinet with double sink and wall cabinets over.

Staff Office. Provide administrative type space. See collateral equipment list for furnishings.

Storage. Dry storage and a refrigerator are located in this space. See the collateral equipment list.

Student Lounge.

Toilets. Specify ceiling hung partitions for easier cleaning and drainage to eliminate rusting of floor mounts. Provide solid plastic partition finish for better hygiene and graffiti resistance. Provide convenient shelf for temporary stowage of hand carried items, such as hats and books.

Trainer Room. Allow stowage space for moveable service platforms. Set critical ceiling heights based on highest excursion limit of equipment, portable crane operating heights, and area of service expected for both current and future devices.

Training Equipment Room. This space is used for storage and repair of helmets, headsets and torso harnesses. Racks are needed for boots. Sewing machines are located here. Torso harnesses are hung vertically here on standard wooden clothes hangers supported by a 5 feet long double rod.

Training Issue. Provide 3 feet wide pass-through with counter and coiling door.

Vending. Provide an alcove or a separate area off the corridor such that pedestrian traffic is not restricted, but also located convenient to or within lounge area. Locate vending machines where they can be properly serviced and maintained with minimal disturbance to facility operations. Provide secure brackets to prevent overturning of machines and a hard surface floor sloped to floor drains adjacent to vending machines.

Visitor Control. Locate the checkpoint at the primary pedestrian entrance to the facility, adjacent to the lobby and near administrative areas. Provide 42 inch high counter with sign-in area, under counter files, lockable storage, intercom console where required, and staff phone. Records screening occurs here. Accommodate number of personnel designated by the user.

4.2.2.5 Interior Design. NAVFAC DM-14.01 provides interior design guidance. Provide imaginative and creative use of colors and furnishings. Fully integrate interior design with the work of other design and engineering disciplines at all stages of the facility design process. Provide only those finish systems which have a proven track record of use and testing. Materials and finishes selection criteria should balance all factors related to installation and usage: initial and life cycle costs, aesthetics, comfort, durability, safety and ease of maintenance and suitability for cleaning procedures. Corridors, for example, must be designed for transportation of training aids and devices, as well as heavy trainee traffic. Carpet, if specified properly, can serve well as a sound dampening material and is easily maintainable with good wearing longevity. Refer to appropriate tables for suggested interior finishes.

a) Color. Develop a color plan that is consistent with the building program. Use color to stimulate positive human physical and emotional reactions and to enhance the overall functions of the building. Color selection can also support maintenance management. As a general rule, fixed building materials (e.g., pavers, ceramic tile, resilient flooring, ceilings, etc.) should be relatively neutral. Introduce stronger accent colors on more changeable finishes (e.g., paint, wall coverings, carpet, furnishings). This will allow color changes at minimum cost as areas are refinished in the future.

b) Floors. Training facilities are subject to heavy trainee in/out pedestrian traffic. Entry points and corridors must withstand heavy foot traffic. Minimize tracked-in dirt by using walk-off mats at entry points to protect flooring and to reduce maintenance. Provide durable and easily maintained floors. Consider safety, noise impact, traffic bearing requirements, and the effect of moisture and chemicals that flooring will be subjected to. Carpeting may be used in accordance with Table 2.1, Recommended Finishes, MIL-HDBK-1001/1 and MIL-HDBK-1008C.

c) Ceilings. Metal slat ceiling systems are prohibited, since they do not allow heat to collect at heat detectors. Value Engineering reports also show significant implemented savings for acoustical tile ceilings over metal slat systems. Ceiling systems for corridors, which usually must accommodate an array of utilities, must be thoroughly evaluated for initial and life cycle costs, aesthetics, durability, ease of access, sound control, fire protection requirements, future utility adaptations, and maintainability. Techniques available for maintenance, repairs, and re-lamping in the high bay may render a finished ceiling with recessed fixture mounts inappropriate. Finished dropped ceiling in the high bay is discouraged.

4.2.2.6 Signs. Provide a signage plan, legend and details. Design signs as an integral part of an overall building and site system, to be furnished and installed under the construction contract. Economy, aesthetics, durability, flexibility, ease of installation and maintenance are important considerations of signage design. Design the system to inhibit vandalism but with flexibility to enable the addition or deletion of information. Select a mounting mechanism for the signs to permit the reuse of signs as the facility changes. Specify an easily-read letter form such as Helvetica Medium. Indicate the design, location and installation method in the plan, elevations and specifications. Require the contractor, in the project specifications, to make a comprehensive submittal of the proposed signage system and to provide information necessary for acquiring new or replacement signs. The exterior signage system must be respected both on and off the specific facility site. Any signage must also be harmonious in the landscape. Care must be taken to use signs only when necessary and to restrict the use of random styles, placement and colors. Prepare a Signage Manual to instruct the activity in maintenance of the signage system and provide specialized equipment and materials necessary for same. Use universal hazard warning signage.

Physiological training facilities require direct access by emergency medical personnel. Signage must be clear and distinct to avoid any confusion in emergencies. Students are short term and distinct directional signage to each room is necessary. Since course durations are often short, each incoming class must be able to orient easily. Place emphasis on directional signage to immediately familiarize emergency medical personnel and trainees with the room names and numbers. Wall-mounted signs extending into the corridor will indicate room identifications from a distance and greatly enhance efficient access to the appropriate rooms.

a) Entrance Sign. Entrance signs at roadway, walkway and/or building entry point may be necessary to introduce the training facilities to visitors including the handicapped. Entrance signs should be positioned for visibility and should clearly identify the building name, function, number and organization, and should be consistent with the installation's overall signage system.

Table 4.1
RECOMMENDED FINISHES-PHYSIOLOGICAL TRAINING FACILITIES

| ROOM | WALLS | FLOOR | BASE | CEILING | REMARKS |
|---|---|---|---|---|---|
| AVIATION PHYSIOLOGIST | PTD | CPT | RUBBER | ACT | |
| AVIATION PHYSIO TECHNICIANS | PTD | CPT | RUBBER | ACT | |
| CLASSROOM | PTD | VCT | RUBBER | ACT | 1 |
| CLERICAL STAFF | PTD | CPT | RUBBER | ACT | |
| CONTROL | PTD | CPT | RUBBER | ACT | |
| CORRIDORS | PTD | CPT | RUBBER | ACT | 2 |
| EJECTION SEAT TRAINER | PTD | CNC/SLR | RUBBER | EXP&P | |
| ELECTRICAL | PTD | CNC/SLR | NONE | EXP&P | |
| EST STORAGE | PTD | CNC/SLR | NONE | EXP&P | |
| FAILSAFE ADMIN | PTD | CPT | RUBBER | ACT | |
| FAILSAFE EQUIP | PTD | CNC/SLR | NONE | EXP&P | |
| FAILSAFE SECY | PTD | CPT | RUBBER | ACT | |
| FAILSAFE MAINT | PTD | CNC/SLR | RUBBER | ACT | |
| FOUR LINE RELEASE | PTD | CNC/SLR | RUBBER | EXP&P | |
| GENERAL STORAGE | PTD | VCT | RUBBER | ACT | |
| HYPO CHAMBER | PTD | CNC/SLR | RUBBER | EXP&P | |
| HYPO CHAMBER OXYGEN STORAGE | PTD | CNC/SLR | NONE | EXP | |
| HYPO CHAMBER TOILET | PTD | VCT | RUBBER | ACT | |
| HYPO CHAMBER MECHANICAL ROOM | EXP | CNC/SLR | NONE | EXP | |
| JANITOR | PTD | CNC/SLR | NONE | EXP&P | |
| LIBRARY | PTD | CPT | RUBBER | ACT | |
| LOBBY | PTD | VCT | RUBBER | ACT | |
| LOCKER ROOM | PTD | CT | CT | ACT | 3 |
| LPO/LCPO OFFICE | PTD | CPT | RUBBER | ACT | |
| MAINT REPAIR | PTD | CNC/SLR | NONE | ACT | |
| MECHANICAL ROOM | EXP | CNC/SLR | NONE | EXP | |
| MED TREATMENT | PTD | SV | INTEGRAL | ACT | |
| NIGHT VISION | PTD | VCT | RUBBER | ACT | 4 |
| OIC OFFICE | VWC | CPT | RUBBER | ACT | |
| OUTSIDE EQUIP STORAGE | EXP | CNC | NONE | EXP | |
| OXYGEN STORAGE | PTD | CNC/SLR | NONE | EXP&P | |
| PANEL ROOM | PTD | CNC/SLR | NONE | EXP&P | |
| PARACHUTE RIGGER ROOM | PTD | CPT | RUBBER | ACT | |
| REAR PROJECTION | PTD | VCT | NONE | EXP&P | |
| STAFF/STUDENT LOUNGE | VWC | VCT | RUBBER | ACT | |
| STAFF OFFICE | PTD | CPT | RUBBER | ACT | |
| STUDENT LOUNGE | VWC | VCT | RUBBER | ACT | |
| TOILETS | PTD | CT | CT | ACT | |

Table 4.1 (Continued)
RECOMMENDED FINISHES-PHYSIOLOGICAL TRAINING FACILITIES

| ROOM | WALLS | FLOOR | BASE | CEILING | REMARKS |
|---|---|---|---|---|---|
| TRAINING EQUIP /STORE ROOM | PTD | VCT | RUBBER | ACT | |
| TRAINING ISSUE | PTD | VCT | RUBBER | ACT | |
| VENDING | PTD | VCT | RUBBER | ACT | |
| VISITOR CNTRL | VWC | CPT | RUBBER | ACT | |

Note: See Glossary for finish material abbreviations.

Remarks:
1. Alternate floor includes carpet.
2. Provide semi-gloss paint with good cleanability.
3. Provide painted gypsum board if a part of shower room.
4. Non-reflective surfaces are required.

b) Building Identification Sign. Training facility identification signs identify a building by name and number. Design identification signs as part of the overall signage system of an installation, using freestanding signs and/or wall mounted signs. Locate and size building identification signs for visibility from the main access street. Coordinate building numbers with the Public Works Office and fire service requirements, and position at standard locations on the building.

c) Building Directory. Locate a building directory where it is clearly visible to all visitors as they enter the building. The building directory should consist of a permanent header panel with the name of the building or the major organization in the building. Provide a changeable letter board with changeable letters or message slots for the directory section.

d) Directional Signs. Locate directional signs to indicate the location of high priority destinations, departments and functions of a building at every decision point. Indicate route to classrooms by number groupings. Include directions to toilets, lounge, library, vending and outdoor smoking areas.

e) Room Identification Signs. Room signs identify room entrances and services such as toilets, telephones and housekeeping activities. Room numbers in addition to names are essential for repetitive spaces such as classrooms and offices.

f) Regulatory Signs. These prohibit certain activity, for example, "No Smoking" or "No Entry." Many safety signs are required by law or regulation and may include building evacuation, fire exit maps, or exit maps specifically for the handicapped.

g) Informational Signs. Additional signs may be required to list building and activity operating hours.

h) Notice/Bulletin Boards. These are especially important in training facilities to control clutter and readily accommodate changing information throughout the building. Provide tack board surfaces or similar surface management systems to accommodate unanticipated messages, signs, posters, announcements, etc. at high traffic areas, doors, elevators, counters, columns, drinking fountains, public telephones, lounges, etc.

i) Handicapped Criteria. Coordinate all signs with the handicapped requirements of Federal Standard 795 and ADAAG.

j) Additional Guidelines. Refer to NFGS-10440G for additional guidelines. Also, Air Force Pamphlet AFP 88-40 provides excellent guidelines for Department of Defense facilities in general. The information is nonproprietary and easily modified to match specific facility designs and Base Exterior Architectural Plan (BEAP) standards.

4.2.2.7 Windows. Consider monitors and clerestories for internal natural light. Natural light is desirable, in general, but is prohibited in classrooms. Sun screens, roof overhangs, and recessed windows can effectively control direct light penetration. Provide window head details to accommodate installation of window coverings and ease of operations. Provide operable windows for natural light and ventilation where permitted by security provisions. Comply with NFPA 101 for window size and mounting heights.

Provide non-obtrusive observation glass panels where desired by the user in classrooms, laboratories and other non-private trainee occupied areas. Glazed openings that are subject to accidental human impact due to location, such as sidelights that extend to the floor, should comply with 16 CFR Part 1201 issued by the U.S. Consumer Product Safety Commission.

4.2.2.8 Doors and Hardware. Passage doors should be 3 feet wide minimum. Exterior wall overhead doors can be a critical source of extreme heat gain/loss and air and moisture infiltration into lab/ classroom settings where temperature and humidity conditions must be maintained. Overhead coiling doors to the exterior are not acceptable for environmentally conditioned spaces. Provide weathersealed insulated vertical lift or sectional doors or insulated removable panels with lifting eyes. Insulated panels must be easily removable by facility personnel. Provide inactive leafs and removable transoms where equipment moves are infrequent. Provide four hinges where required on heavy use doors. Avoid panic hardware except where specifically required by criteria, since the Navy does not classify training facilities as schools.

a) Provide adequately sized interior corridor doors for classrooms with oversized equipment, where possible, in lieu of exterior openings into each classroom, to minimize exposure to exterior elements. Size all doors to accommodate the path of oversized equipment from loading areas to destination and between rooms. Allow for maneuverability in tight corridors. Classrooms and other areas where classified information is used should not have doors with viewing windows.

b) Trainer spaces housing those trainers which require no scheduled or expected removal and replacement should have insulated removable panels in lieu of operating type door. Provide 4 feet wide door at the

medical treatment room and at all doors opening onto the path of medical emergency access.

c) Night Vision Trainer Room. Provide light tight doors.

4.2.2.9 Natural Lighting. The use of natural light is encouraged, as it contributes significantly to the energy efficiency of the building and communicates a feeling of well-being and openness. Natural light can be used in conjunction with high efficiency artificial lighting, featuring photosensitive controls for maintaining lighting levels automatically. Skylights are not permitted, due to excessive solar heat gain and leak potential. Classroom wing corridors and other interior occupied spaces may incorporate monitors with conventional roofing and vertical windows. High bay spaces may incorporate clerestory windows in cases where natural lighting is desired without any distracting or unsightly views.

4.2.2.10 Building Thermal Insulation and Vapor Retarders. Locate vapor retarders with care in view of the thermal differentials associated with training buildings. Do not use vinyl wall covering and impervious paint on the interior surface of exterior walls in humid areas, unless calculations show that condensation will not occur within the wall.

4.2.2.11 Handicapped Design. Provide barrier-free access to civilian work spaces and other spaces intended for public access. Design facilities to locate handicapped access spaces on first floor only, unless the size of the facility's administrative and other accessible areas requires a second floor. Areas hazardous to handicapped persons need not be accessible. Comply with the more stringent application of current criteria in either the Uniform Federal Accessibility Standards (UFAS) or the Americans with Disabilities Act Accessibility Guidelines (ADAAG).

4.2.2.12 Elevators and Stairs. Comply with requirements of DM 3.09 and handicapped criteria in UFAS. For safety related measures, comply with ASME/ANSI A17.1, and NFPA 13.

Provide stair tread nosings that are resistant to heavy wear by trainee pedestrian traffic.

4.2.2.13 Ceilings. Provide access where projection, mechanical and electrical equipment, including adjustment, maintenance and shutoff devices, are located. Ceilings should be maintainable and easily repaired.

Projections from the ceiling such as sprinklers and light fixtures can impinge on clearances required for device installation and removal, as well as crane and hoist operations. Coordinate all ceiling items on a comprehensive reflected ceiling plan.

4.2.2.14 Walls. Impervious finishes applied to the interior side of exterior walls must be carefully evaluated against dew points to prevent vapor dams and subsequent failure of the installation. Protect the corners of walls and columns in all areas.

4.2.2.15 Acoustical Control. A Noise Level Reduction (NLR) minimum factor of 30 is required in the 70-75 DNL zone and an NLR minimum factor of 25 is required in the 65-70 DNL zone. There are no special requirements in the DNL zone below 65.

Conform to noise and sound transmission criteria cited in DM 1.03. Prevent sound transmission over walls. Acoustic absorbing material should be fire and smoke rated as required in MIL-HDBK-1008C.

4.2.3 Landscape Architecture. The framework for planning and design of all landscape architectural elements is found in the activity Master Plan and more specifically in the Base Exterior Architecture Plan (BEAP). General guidance for all design elements can be found in NAVFAC P-960. Landscape design must enhance positive image for the facility and should direct pedestrians to a primary entry. Design for minimal maintenance. Provide landscape fabric for weed prevention. Select hardy specimen species indigenous to the area. Locate hose bibbs convenient for additional irrigation.

Outdoor pedestrian-oriented spaces are often useful for building entry plazas, for break and lunch areas, and to provide pleasant views from the building interior. Design outdoor areas to harmonize with the architectural and natural site character of their surroundings, but to also moderate environmental and climatic extremes, such as noise, sun, wind and seasonal precipitations.

4.2.3.1 Site Analysis and Development Concept. If the analysis and development is successful, the biological integrity of the site will be retained or improved, while successfully meeting the program needs of the user in a comfortable, attractive and functional setting. Minimize clearing of existing vegetation and avoid excessive grading.

4.2.3.2 Planting. Guidance for planting design is provided in NAVFAC P-905. Plantings can provide a pleasant setting and visual asset, and minimize the environmental impact of development. The following is a list of minimum guidelines to be considered in implementing new planting schemes for the facility:

a) Preserve Existing Vegetation. Existing mature stands of trees or other significant vegetation are to be preserved and enhanced, where possible.

b) Select Indigenous Plant Materials. Plant materials chosen will be indigenous to the site.

c) Design for Minimum Maintenance.

d) Define Space and Screen Conflicting Uses. Select plant material to define space and screen visually conflicting uses, where appropriate. See section on screens and walls below.

e) Promote Energy Conservation. Plant materials are to be used to reduce energy requirements, where possible, such as shading with deciduous trees. Enhance any desirable climatic effects, such as clear areas at large glass areas oriented for winter sun heat gain.

f) Establish Unifying Elements. Use planting as a means to unify different elements of an installation.

4.2.3.3 Landscape Lighting. The creative use of lighting can greatly improve the visual character of a project landscape, while providing the nighttime functions of safety, security and path finding. In addition to simply achieving a higher level of illumination, the lighting levels, color, patterns and style should be energy efficient, attractive and functional in a coordinated landscape scheme.

4.2.3.4 Exterior Signs. Conform to requirements of the BEAP.

4.2.3.5 Utilities. Grouping in corridors, underground placement, and screening and grading can de-emphasize the impact of utilities on a site. Flow tests must be conducted to determine the available water supply for fire protection. Indicate a static pressure and a residual pressure at a certain flow.

4.2.3.6 Site Furnishings. In conjunction with the site and landscape design, provide appropriate signs; structures; outdoor furniture and equipment, such as tables and seating; vending machine shelters; telephone booths; screen wall and fences; as well as the more symbolic elements, such as flag poles, memorials and military equipment displays. Definitive design and other data for flagstaffs are available in MIL-HDBK-1034. The lack of coordination, as well as concern for detail, are the primary problems related to site furnishings. Select site furniture that is simple, requiring low maintenance, and relating in color, texture and form to the building design and established base character and BEAP guidelines.

4.2.3.7 Equipment Screens and Walls. Screens and walls for mechanical and electrical equipment are encouraged for aesthetic purposes, but can severely penalize equipment performance. Carefully coordinate design with each engineering discipline. Shade for mechanical equipment is desirable; however, leaves may clog equipment.

4.2.3.8 Selection of Plant Material. Select plant materials on the basis of hardiness and degree of maintenance required. Avoid plants which require more frequent attention than the users can provide to stay in a healthy condition or have an attractive appearance.

4.2.4 Civil. NAVFAC Criteria Manual Series on civil engineering (MIL-HDBK-1005 series) provides general guidance for civil engineering, site work and other related topics. Refer to MIL-HDBK-1008C for location and spacing of fire hydrants. Provide surface bearing capacity for heavy equipment or trucks outside the high bay doors. Edges more than 1 inch in height cannot be negotiated by forklifts. Provide clear path for delivery and removal of equipment from access roads to loading dock. Account for all obstacles and provide adequate turning radii. Provide space for maneuvering vehicles engaged in device removal or installation. A low boy tractor trailer rig and crane riggings will likely be required for initial delivery of the hypobaric chamber. Allow for heavy equipment impact along the course of delivery to the access point for the hypobaric chamber room. Consult NAWCTSD code 412 for guidance on equipment delivery.

Coordinate location of mechanical equipment pads with mechanical design and show major pieces of equipment on civil engineering drawings. Locate noisy equipment remote from occupied spaces and as near as possible to the mechanical spaces. Distribution piping (utilities, refrigerant, condenser water, etc.) should enter the building only through mechanical spaces. Shade is desirable; however, equipment should not be located beneath trees, where it can become clogged with leaves and debris.

4.2.4.1 Roads, Parking and Walkways. These are three of the most land consuming uses on a site. Negative visual impact can be minimized by locating facilities conveniently to each other, encouraging pedestrian use and other non-vehicular modes of access.

Vehicular or pedestrian paving should be in character with a safe, functional and visually pleasing landscape. The sharing of parking and road requirements will minimize total impact. Small parking lots are usually preferable to large lots, since they allow for conforming to the natural topography and other site features and are visually less obtrusive. Provide appropriate paved area with load capacity and adequate maneuvering space for occasional fire truck access and parking area where facilities are used to train local activity fire department personnel. Provide ramps at curbs along routes leading to storerooms to facilitate wheeled access. Accommodate training device transportation into and out of the building through adequate turning radii and appropriate loading facilities. Provide vehicle protective barriers for light standards and fire apparatus. Designate special parking spaces for emergency medical service vehicles, pilot trainees and device contractor as required by the user.

Pedestrian access to training facilities is normally restricted to a single entrance point, due to security criteria. Determine if egress is permissible through secondary exterior doors and, if so, accommodate with walkways. OPNAVINST 5530.14B prohibits parking of privately owned vehicles within 15 feet of any building. Include concrete surface spaces for bicycle racks and motorcycles. Storm drainage and other grates must be oriented with parallel slots perpendicular to the paths of bicycles. Criteria for vehicle parking area design is shown on NAVFAC drawing number 1404837, entitled "PARKING AREA CRITERIA FOR VEHICLES."

4.2.4.2 Handicapped Access. Provide curb ramps, access aisles, and handicapped parking spaces near accessible entrances.

4.2.4.3 Loading Dock Ramp Protection. Each facility requiring a loading dock ramp should be provided side-edge protection in compliance with Section 1910.23c of Public Law 29, Code of Federal Regulations, Occupational Safety and Health Act Standards Manual.

4.2.5 Structural. Structural design should comply with MIL-HDBK-1002 series, and NAVFAC P-355. Base an economical structural system on facility size, projected load requirements, quality of locally available materials, local labor and construction materials, and local wind, snow, seismic, geologic and permafrost conditions.

4.2.5.1 Clearspan Requirements. Columns in the high bay training area are typically prohibited. Check excursion limits for device and accommodate flexibility.

4.2.5.2 Weight Handling Equipment. Monorails should comply with DM 38.01. Conform to NAVFAC NFGS-14637 and NFGS-14622 where applicable. Provide platforms, catwalks, access ladders, and any other provisions for inspection and maintenance of hoists.

Obtain user and device manufacturer input regarding controls and speed criteria for hook heights, capacities and service area. Note that lifting a device will require more clearance than necessary for stationary position.

4.2.5.3 Floors. Design floor slabs along the travel path of any equipment to withstand the heaviest wheel loads anticipated during the installation, in compliance with criteria in MIL-HDBK-1002/2. Training equipment incorporating motion systems will impose static and dynamic forces upon the facility structure.

Isolate the mechanical equipment room floor slabs from the remainder of the facility.

4.2.5.4 Roof Loads. Mechanical equipment is preferred at ground level; however, where roof mounting is necessary, design screening in accordance with local wind loads and directional patterns. Anticipate other roof structure mounted accessories, such as catwalks, ladders, hoists and cranes.

4.2.6 Heating, Ventilating and Air Conditioning. Comply with MIL-HDBK-1003/3 and refer to MIL-HDBK- 1008C for coordination with fire protection systems. Coordinate exterior mechanical equipment location with civil design. Locate noisy chillers and other equipment remote from occupied spaces and as near as possible to the mechanical spaces. Shade is desirable; however, equipment should not be located beneath trees, where it can become clogged with leaves and debris. Distribution piping for utilities, including refrigerant and condenser water, should enter the building only through the mechanical room. Avoid routing chilled water piping over computer areas and trainer devices, to prevent damage to high cost equipment from leakage and condensation. Provide isolation valves to facilitate maintenance without system shutdown. Comply with NAVFAC DM-3.10 where adjacent spaces and/or sensitive equipment cannot tolerate noise and vibration.

Ceilings may be higher than normal due to lab trainer requirements. Accommodate appropriate airflow requirements at the trainee table working level.

4.2.6.1 Design Conditions. Design conditions for comfort conditioning should be determined in compliance with MIL-HDBK-1190.

4.2.6.2 Ventilation. Provide ventilation rates for occupied spaces as required in ASHRAE STD 62. Provide thermostatically controlled forced ventilation in mechanical, electrical, pneumatic and hydraulic spaces. Cool pump rooms and compressor rooms by mechanical ventilation only.

4.2.6.3 Zoning, System Selection and Part Load Performance. Occupancy of classroom areas varies drastically with respect to training schedule. Consider each classroom/training area as a separate temperature and humidity control zone. Provide individual temperature controls for each classroom. Size terminal equipment to accommodate minimum as well as maximum loads.

Multiple air handling units (allowing staged turn-down of system capacity as sensible load falls) should be considered. Terminal reheat is permitted to meet part-load humidity performance requirements.

4.2.6.4 Controls. DDC is the control system of choice for HVAC systems. Consider life cycle cost, maintenance, and customer preference.

4.2.7 Plumbing. General guidance for plumbing design is provided in DM-3.01. Coordinate plumbing with structural design to avoid conflicts between underground pipes, trenches and footings. Provide shut-off valves to isolate systems when doing maintenance, so that entire facility is not affected by an outage. Do not locate roof drains and roof drainage piping over trainer devices, to prevent damage to equipment in the event of leakage or condensation.

4.2.7.1 Compressed Air. Comply with the requirements of NAVFAC DM-3.5.

Maintenance Repair Shop. Provide shop air.

4.2.7.2 Electric Water Coolers. Splash resistant basins are recommended to prevent slippage on the floor and shock hazard. Handicapped models should be recessed as required to minimize obstruction to passage.

4.2.7.3 Waste Systems. Guidance is provided in DM-3.01. Accommodate oil separators and interceptors.

4.2.7.4 Emergency Eyewash/Shower. Locate for ready access from hazard areas such as the hypobaric chamber mechanical room. Provide curtain and testing apparatus.

4.2.8 Electrical. Typically, specific electrical requirements for training facilities and/or training device(s) are contained in a Technical Manual. Applicable NAVFAC military handbook 1004 series provides general guidance on electrical engineering. Consult them in conjunction with the current editions of NFPA 70 and ANSI C2.

a) Hydraulic Pump Rooms. Provide steel conduit with liquid type fittings where electrical cables are located in the same trench with hydraulic piping.

b) Classrooms. Locate 120 volt convenience outlets for use of portable audiovisual equipment. Provide conduit stub-outs with pull wire in ceiling space for future ceiling mounted audiovisual aids, such as projection systems. Locate remote control and microphone outlets off-center on front wall, convenient to the podium. Provide two-way communications from classrooms to administrative area or security desk, if required by the user.

c) Corridors. A shock hazard exists from convenience outlets in areas where floor buffers are used. Provide locking type outlets and metal device covers mounted high above splash zones.

d) Visitor Control. Consider an intercom which includes capacity to receive calls from rooms where medical emergencies are likely to occur.

e) Maintenance Repair Shop. Provide GFCI 220 volt service. See collateral equipment list.

4.2.8.1 Telecommunications. Provide a structured telecommunications cabling system including interior and exterior media and raceway system. Provide fiber optics to the desk of IT-21 customers. Locate outlets as directed. Consider telephone and communication outlets in maintenance areas and dedicated lines at devices where networking is anticipated. Accommodate any special user or government contractor communication requirements which may require intercom features integrated into the telephone system.

4.2.8.2 Lighting. Provide fluorescent fixtures with battery packs and/or wall packs for emergency lighting, in lieu of a central system.

a) Classrooms. Lighting controls (dimmers and/or selective lamp and ballast switching) with discrete circuits for the front of the room, allow for effective visual use of television monitors, projectors, view graphs, etc. Use spectrum ranges appropriate for classroom settings. Emergency lighting is required as a safety precaution for operation of equipment during power failures.

b) High Bay. In high bay areas, include provisions for maintenance access to fixtures for repair and re-lamping. Consider wall mounted lighting located at a level that allows servicing by means of a 6 feet stepladder.

c) Night Vision. Provide a combination of fluorescent and incandescent lighting.

4.2.8.3 Lightning Protection. Perform a lightning protection risk assessment on all aviation training facility types, in compliance with Appendix I of NFPA-780, to justify lightning protection when required by the regional Engineering Field Division. Comply with applicable sections of MIL-HDBK-1004/6.

4.2.8.4 Facility Low Voltage Power. Refer to applicable TFR or Technical Manual and comply with MIL-HDBK-1004/1 and MIL-HDBK-1004/4. Generally provide 480Y/277 volt, three phase, four-wire service to the facility along with dry type transformers to step voltage down for 120, 208 and 240 volt requirements.

4.2.8.5 Intrusion Detection System (IDS). IDS systems are not normally required; however, if needed they are procured and installed via contracts administered by NCIS. Coordinate with NCIS for facility planning, design and construction schedules. IDS systems including commercial power supply, utility and control wiring systems are considered personal property. Provide support system in the construction contract, to include conduit with pull wire and device boxes. IDS for Marine Corps projects are separately funded and managed and do not require NCIS coordination. Provide IDS support requirements and startup specification where required, in accordance with MIL-HDBK-1012/1.

4.2.9 Fire Protection. Comply with MIL-HDBK-1008C, UBC, and NFPA 99 and NFPA 101. Classroom facilities for Navy installations are considered "business" occupancies per NFPA 101. Assembly occupancies, conference rooms and classrooms with fixed seating and hypobaric chambers require special attention. Hypobaric oxygen storage requires a dedicated room conforming to NFPA 55, Standard for the Storage, Use, and Handling of Compressed and Liquefied Gases in Portable Cylinders. Provide visual fire alarm signals on a case by case basis, where ambient noise in classrooms can prevent hearing audible alarms. Requirements for sprinkler systems, carbon dioxide extinguishing systems, fire alarm systems and protection of electronic equipment installations, are determined by MIL-HDBK-1008C. Hand held portable halon extinguishers are permitted; however, automatic halon extinguishing systems are not. Convey fire alarm signals to the base fire department via the base fire reporting system. Verify the type of system with the station fire department.

4.2.10 Safety. The design of all military facilities that serve as places of employment should conform to, or be consistent with, all applicable standards published under the Occupational Safety and Health Act (OSHA) of 1970. Note that Chapters 5 through 7 of this reference state that whenever construction criteria and OSHA standards conflict, "the standard providing the greatest degree of safety should govern." Obtain a System Safety Work Group (SSWG), PHL and RAC hazard rating established by the activity and found in the facility study. Typical hazards include equipment guards and clearances, carbon dioxide discharge and hydraulic systems.

Moving and electrically energized parts and pressurized hydraulic systems are primary concerns. Include a safety eyewash/shower in accordance with ANSI Z358.1 where hydraulic or other petroleum, oil and lubricant (POL) materials are used in the building. Provide drain and hood or curtain for flow testing eyewash/shower. Arrange for hydraulic pumps to shut down automatically if a leak or break occurs in the line at any point. Provide emergency shutoff switches for the hydraulic pumps at the instructor's station. Provide three feet safety clearances around training devices. Paint floor around any rotating device yellow and black and indicate the type of hazard, e.g., "Strike hazard-rotating device -stay clear."

4.2.11 Security. A checkpoint for identification of entrants to the building may be required. MIL-HDBK-1013/1 provides security information.

4.3 Collateral Equipment. When MILCON "Personal Property" facility projects are programmed, the installation criteria for the equipment must be shown in, or attached to, the facility studies for the projects involved. Major claimants, users and equipment procurement agencies for projects of this type, are responsible for providing these criteria as part of the MILCON planning process. "Personal Property" is defined as plant equipment which is procured and installed by the major claimants, users or equipment procurement agencies, with funds from other appropriations. This category of equipment includes technical, training, simulation, and automated data processing equipment. Detailed requirements for the aforementioned can be found in NAVFACINST 11010.44E.

Furniture items must be researched and specified in accordance with the Federal Acquisitions Regulations (FAR) Part 8 Required Sources of Supply. Each furniture piece specified must be the lowest priced item which meets the minimum functional and aesthetic needs of the facility which they will support. The functional aspect of each furniture piece must consider, as a minimum, function, ergonomics, appropriateness, and maintainability. Aesthetics must consider, as a minimum, scale, style, finishes and fabrics where applicable. All furniture items must be a level of quality which is comparable to the finishes specified for the facility itself.

4.3.1 Collateral Equipment List. The collateral equipment list is an essential programming and budgeting document. Preliminary collateral equipment lists are a means to establish a budget for funding purposes and are not intended to be used as a "buy" list. Consult the Project Interior Designer at the EFD to assist in developing functional requirements as part of the interior design process. Integrate these functional requirements with the building design and space planning effort, which is reflected in the Furniture/Equipment Footprint. Maintain a continuing update of the Collateral Equipment List with the using activity, to ensure all budget estimates are current and are adequately accommodated in the design. Include fire extinguishers and consider shredders or incinerators where classified material is used.

4.3.2 Furniture/Equipment Footprint. The Furniture/Equipment Footprint should use standard or "generic" furniture sizes to demonstrate the adequacy of each space area and the Collateral Equipment List, and to communicate to other engineering disciplines the utilities and services required for each space. It also demonstrates that life safety exit patterns are accommodated with the furniture and equipment in place. Provide a Furniture/Equipment Footprint for the PE phase or prior to 35%.

Lockers in the corridor or elsewhere in the facility are at the discretion of the user. Consider locker groupings for personal belongings and foul weather gear near the main entry or student lounge.

4.3.3 Training Aids

4.3.3.1 Special Training Device Requirements. Maintain a continuing update of the proposed equipment with the user, to ensure all items are current and are adequately accommodated in the design.

4.3.3.2 Audiovisual Requirements

a) Rear Screen Projection. Where rear screen projection is essential, provide at least 6 feet clear space width behind the screen, which can accommodate the projection path and serve as media storage and instructor work space.

b) Presentation Hardware and Projection Systems. Personal computer (PC) based digitizing graphics hardware and projectors are current state-of-the-art media for visual aids in the classroom. Portable table top or shelf mounted console projectors are replacing ceiling mounted projectors because of mobility and dependability. Floor outlets for media cables and power should be considered along with control outlets near the lecture area.

c) Slide and Overhead Projectors. Provide stowage space for portable carts. See concerns for aspect ratios below.

d) Projection Screens. Base selection of permanently mounted or stand alone screens on user preference. Permanently mounted screens can limit chalkboard area. Base justification of electrified projection screens on local requirements; however, maintenance and repair costs must be considered. Successful visual presentations depend on arrangements of the chalkboard and projection screen relative to the seating configuration.

(1) Avoid visual obstructions. Provide clearspan structural systems where possible. Large demonstration tables when raised on platforms can obscure the lower areas of chalkboards.

(2) Slope the floor and raise the speaker's platform only where space is dedicated to projection and large capacity lecture functions.

(3) Consider the viewing distances.

(4) Conform to the vertical and horizontal viewing angles. Place seats at a distance from a screen not less than twice nor more than six times the width of the screen image to be viewed. The angle of elevation from the eye to the top edge of the screen or chalkboard should not exceed 30 degrees. Where room or seating depth is known, the screen width can be determined by W=D/6 (preferred) or W=D/10 (minimum), where W=screen width and D=depth of room or seating. Select particular projection equipment based on aspect ratios compatible with height and width ratios for the screen. Refer to Time-Saver Standards for Building Types, 2nd edition, McGraw-Hill Book Company, for graphic data on projection angles and screen widths. Consult Architectural Graphic Standards, John Wiley and Sons, for viewing zone limits and projection medium aspect ratios.

e) Chalkboard and Marker Boards. Porcelain surface marker boards are generally preferred since they are cleaner and can double as projection screens; however, scrutinize their use in high security areas due to the potential retention of images after erasure. Avoid chalkboards in computer rooms since airborne chalk dust can damage computer hardware.

4.4 Environmental Requirements. For applicable discharge criteria, consult with the NAVFAC Criteria Office and the cognizant EFD. Refer to MIL-HDBK-1005/8. Design facilities to meet environmental requirements at federal, state and local levels. Obtain a MSDS on every toxic or suspected toxic product to be used at the facility and design in protective measures and ventilation methods. Comply with all applicable pollution abatement criteria.

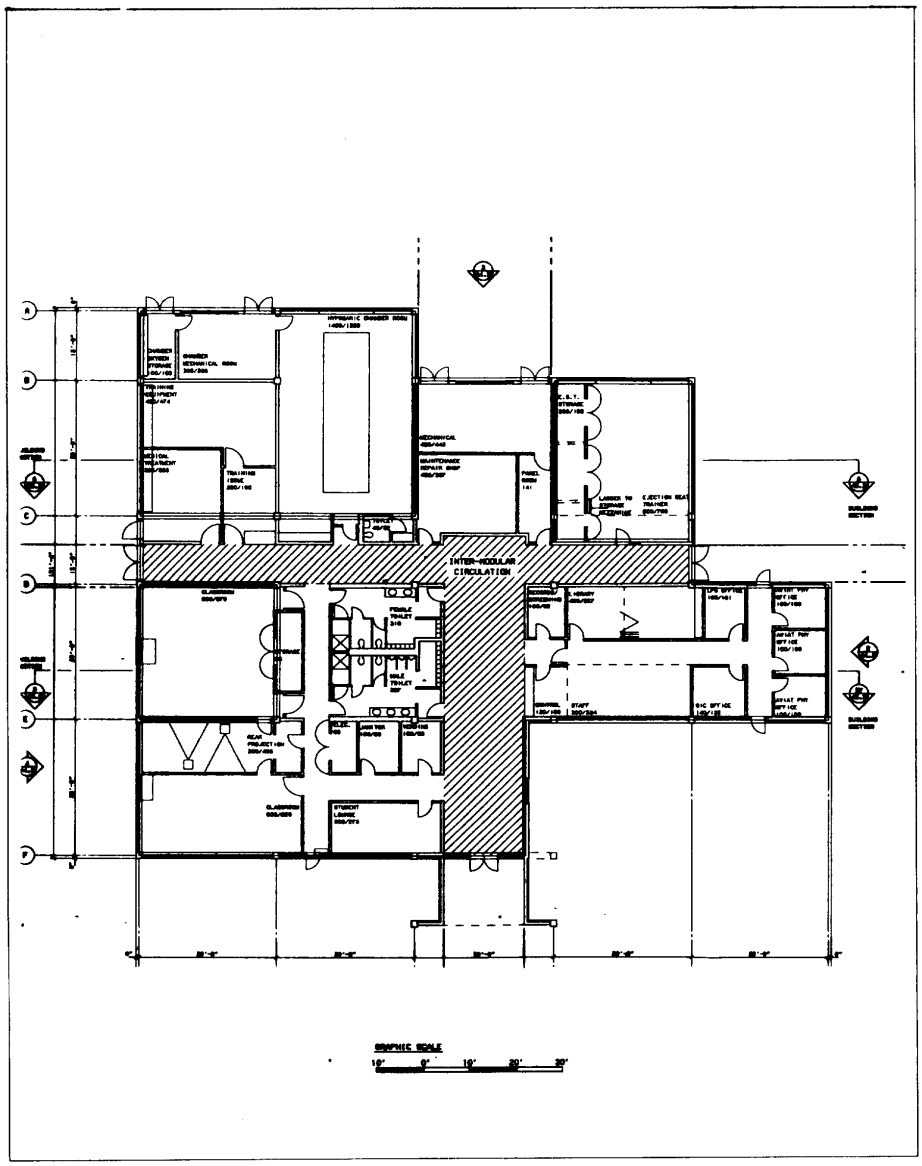


| TITLE: TYPICAL FLOOR PLAN– SMALL APTU | DATE JUNE 1995 | FACILITY PLATE NO. 171.20 | SHEET C1 |
|---|---|---|---|

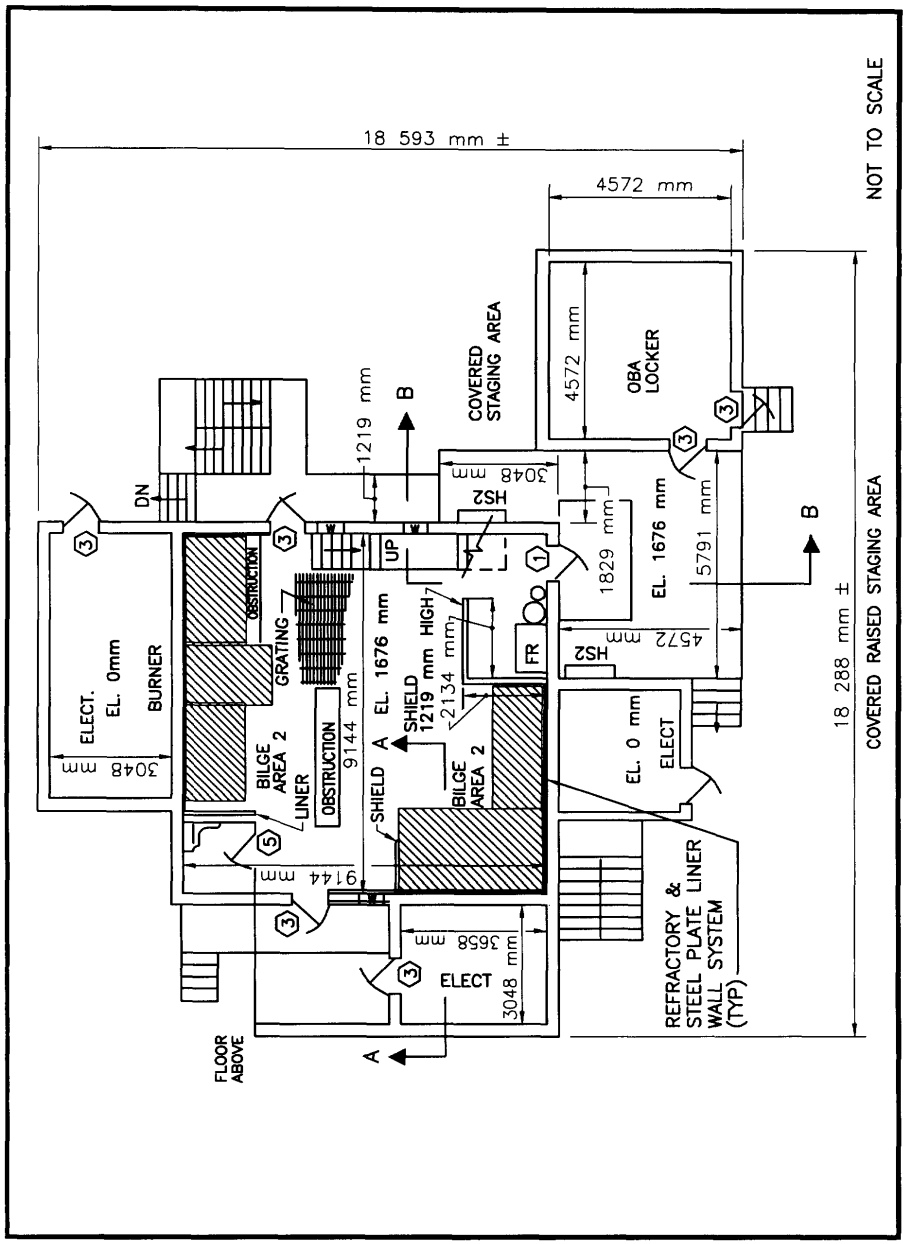


Figure C–2

19F3/19F3B B–1 First Floor Plan

Table 4.2
TRAINER FACILITIES DATA-Rapid Decompression Chamber-device 9A1C

Room dimensions shown are minimums unless noted.

**** CAUTION: This document is for preliminary planning only.****
****Verify with Facilities Management & MILCON Div., Naval Healthcare Support Office prior to use. ****

**REFERENCE DOCUMENTS**

Technical Manual NAVTRADEV P-4463 revision A, Altitude Training Rapid decompression Chamber, Device 9A1C.

**ARCHITECTURAL**

| | MIN DIMENSIONS (LWH or noted) |
|---|---|
| Device Operating Room--(High Bay) panel 1 | **225.5"x 127"x 101.6"** |

General Notes: Above requirements are Trainer Device specific. See other data for administrative & support spaces.

**STRUCTURAL**

Device installation transport method: casters
Device panel 1 operating weight = **5790** pounds, shipping weight = **6255** pounds.
Floor load for panel 1 in operating configuration with jack pads = **14.0** psi
Device panel 2 operating weight = **1295** pounds, shipping weight = **1635** pounds.
Floor load for panel 2 in operating configuration with jack pads = **6.5** psi
Device panel 3 operating weight = **565** pounds, shipping weight = **565** pounds.
Floor load for panel 3 in operating configuration with casters = **400** psi

Table 4.2 (Continued)
TRAINER FACILITIES DATA-Rapid Decompression Chamber-device 9A1C

**MECHANICAL**

Air Vacuum:
Implosion Safety Valve:
Oxygen:

**ELECTRICAL**

Component Power:

| | VOLTS | HZ | PHASE | REMARKS |
|---|---|---|---|---|
| Vacuum pump | **208** | **60** | **3** | **40KW** |
| Air conditioning compressor | **208** | **60** | **3** | **5KW** |
| Medical | **117** | **60** | **3** | **1/3HP** |
| Lighting systems | **117** | **60** | **1** | **8KW** |
| Uninterruptible Power System?? | | | | |

**SAFETY**

Implosion Safety Valve (see above)
Uninterruptible Power System (see above)

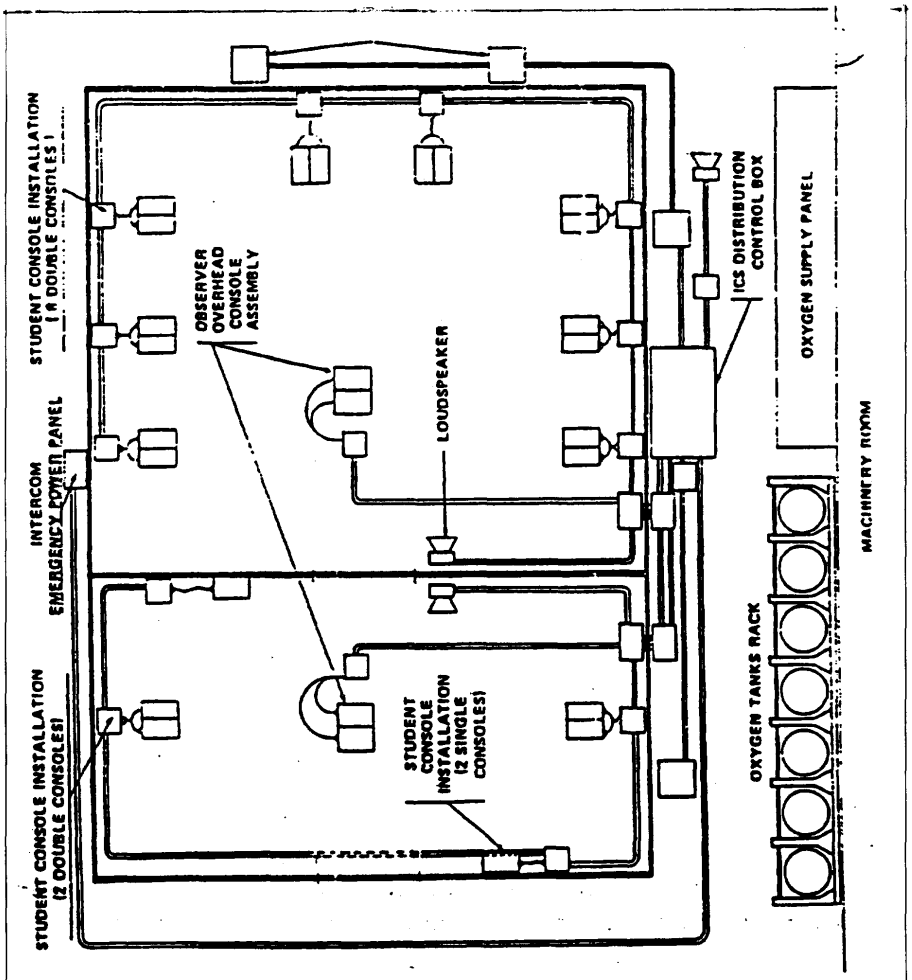


Figure 1-1. Device 9A1C General Arrangement, Plan View

| TITLE: FLOOR PLAN— DECOMPRESSION CHAMBER | DATE JUNE 1995 | FACILITY PLATE NO. 171.20 | SHEET C3 |
|---|---|---|---|

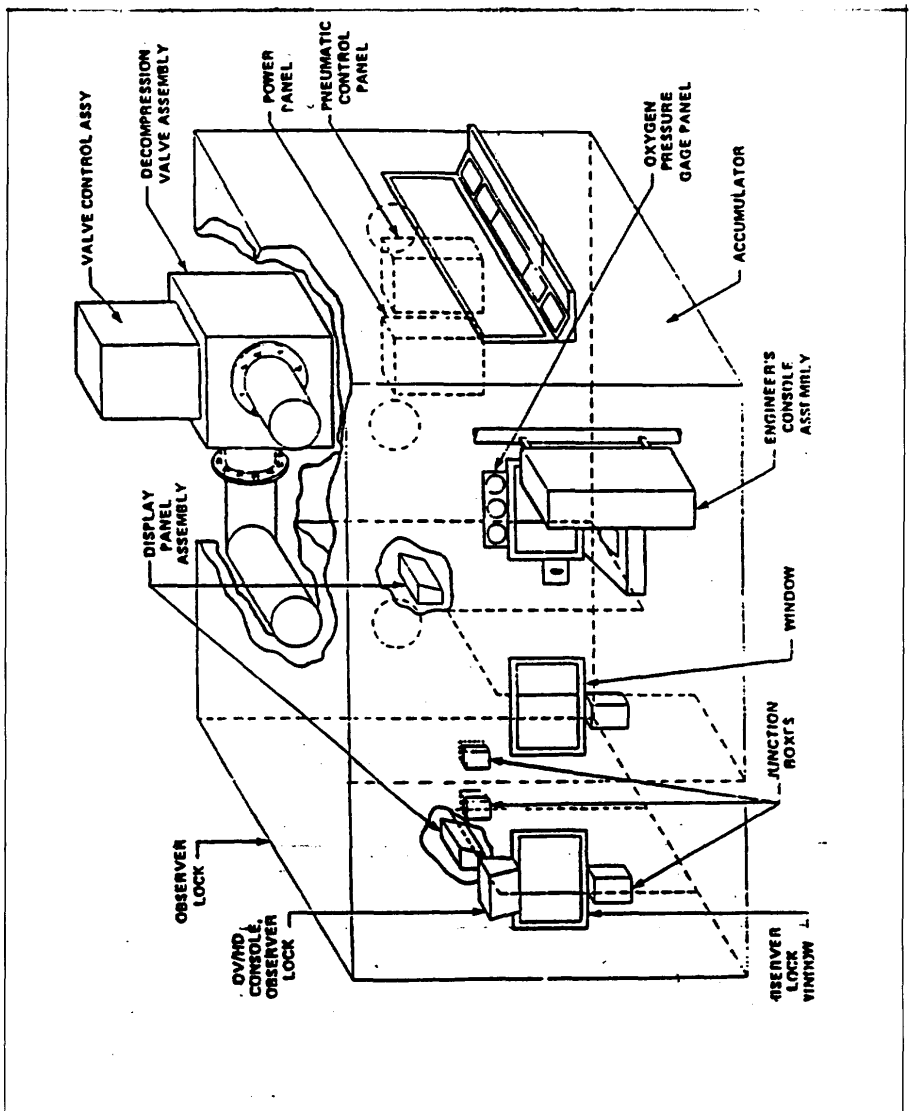


Figure 1-2. Device 9A1C General Arrangement, Cutaway View

| TITLE: ISOMETRIC/CUTAWAY VIEW– DECOMPRESSION CHAMBER | DATE JUNE 1995 | FACILITY PLATE NO. 171.20 | SHEET C4 |
|---|---|---|---|

Table 4.3
TRAINER FACILITIES DATA-Universal Ejection Seat Trainer-device 9E6

Room dimensions shown are minimums unless noted.

**** CAUTION: This document is for preliminary planning only.****
****Verify with Facilities Management & MILCON Div., Naval Healthcare Support Office prior to use. ****

**REFERENCE DOCUMENTS**

Technical Manual NAVTRADEV P-3779 revision A, Maintenance Handbook, Universal Ejection Seat Trainer, Device 9E6.

**ARCHITECTURAL**

| | MIN DIMENSIONS (LWH or noted) |
|---|---|
| Device Operating Room--(High Bay) | **480"x 240"x 360"** |
| Minimum doorway passage: | **108"w x 60"h** |

General Notes: Above requirements are Trainer Device specific. See other data for administrative & support spaces.

**STRUCTURAL**

Weight: **5500 lb**
Device installation transport method: 6 heavy duty casters for rolling or lift rings are integral for crane unloading .
Device installation: leveling jacks and bubble level are integral

Table 4.3 (Continued)
TRAINER FACILITIES DATA-Universal Ejection Seat Trainer-device 9E6

**MECHANICAL**

Nitrogen tanks:

**ELECTRICAL**

Device Power:

| | VOLTS | HZ | WIRE COUNT | PHASE | REMARKS |
|---|---|---|---|---|---|
| Device | **115** | **60** | | **1** | **30amp** |

**SAFETY**

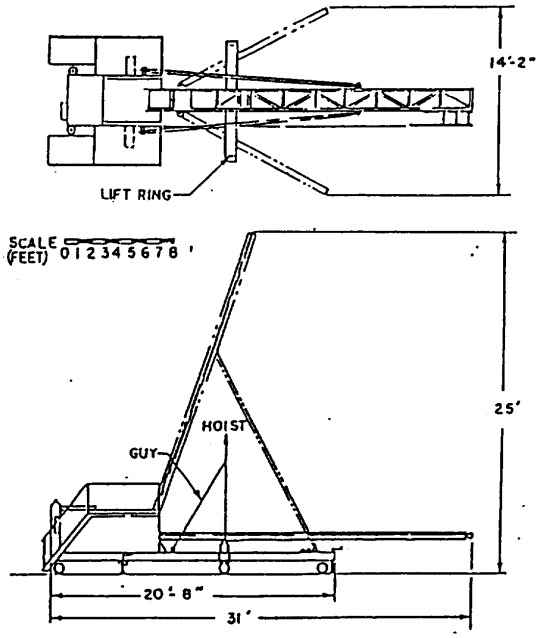


| TITLE: TOP AND SIDE VIEW EJECTION SEAT TRAINER | DATE JUNE 1995 | FACILITY PLATE NO. 171.20 | SHEET C5 |
|---|---|---|---|

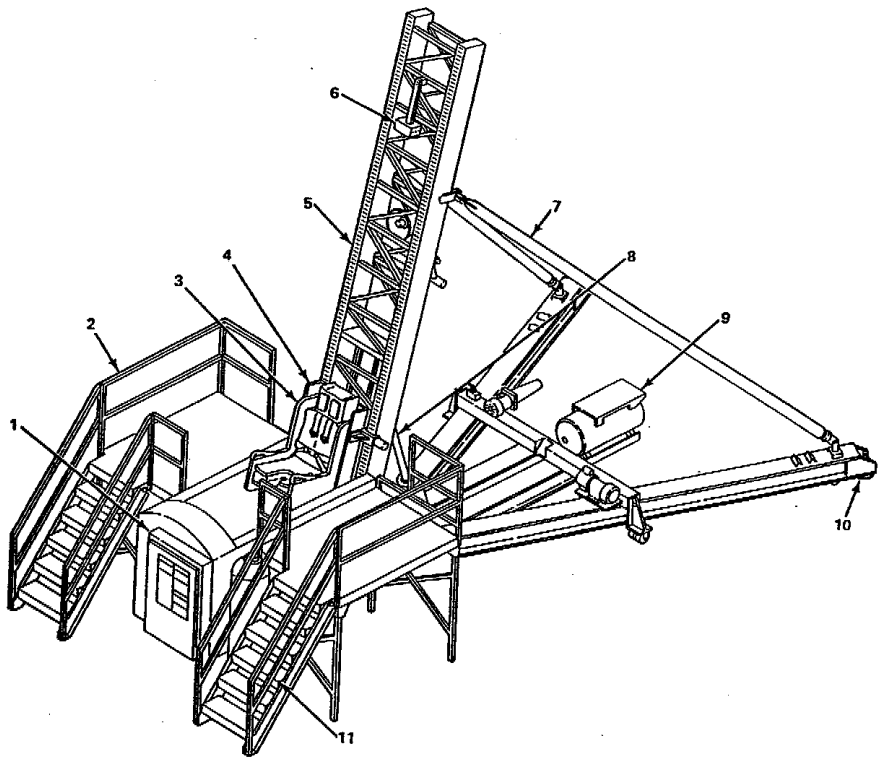


1. Cockpit
2. Platform handrail
3. Ejection seat
4. Sled
5. Tower
6. Friction brake
7. Tower brace
8. Hydraulic cylinder
9. Air accumulator
10. Caster
11. Platform steps

| TITLE: ISOMETRIC EJECTION SEAT TRAINER | DATE JUNE 1995 | FACILITY PLATE NO. 171.20 | SHEET C6 |
|---|---|---|---|

## Section 5: AVIATION SURVIVAL TRAINING CENTER FACILITIES-WATER SURVIVAL

5.1 Functional Requirements. Water survival training involves the use of classrooms, hands-on training and training devices, such as parachute drag and helo hoist. Water survival facilities are typically combined with physiological training facilities as aviation survival training centers. This section addresses requirements specific to Water Survival functions of Aviation Survival Training Centers. See section 4 for basic criteria.

On-site facilities for medical emergencies will be dependent upon the proximity and accessibility of local medical facilities. Likewise, on-site facilities to accommodate physical training such as locker rooms and showers will be dependent on the proximity of such facilities in the vicinity.

5.2 Facility Design. General planning criteria for water survival training facilities can be found in P-80 under Category Codes 171 and 179 in Chapter 2, Section 1. In addition to the "Total Team Pre-Design Process" session project team as described in paragraph 1.5, include the Office of the Assistant Secretary of Defense (Health Affairs) Defense Medical Facilities Office [OASD(HA)DMFO]; the Bureau of Medicine Surgery (BUMED) Codes 02T and 43; Naval Healthcare Support Office (HSO) MCLO; Naval Air Warfare Center Training System Division (NAWC(TSD)); Naval Operations Medical Institute (NOMI) Code 11 and NAVFAC Medical Facilities Design Office (MFDO) Code 09MD. Water survival training facilities may typically use large dynamic training devices secured to pool decks. Assess the frequency of removal of large devices to determine whether operable doors or knock-out panels are appropriate for device retrieval. Moist pool environment, evaporation, device design accommodation, operation and maintenance support, training techniques, medical safety and future modification to the equipment are prime design considerations for water survival training facilities. Intensive coordination is required between the architectural and mechanical design to control the effects of moisture.

Future growth is not likely, due to the limitations in throughput based on capacities of the training devices.

Refer to Appendix A for general arrangement AUTOCAD drawing file of aviation water survival pool trainer. Refer to Appendix B for photos of typical aviation survival training devices located in representative facilities.

5.2.1 Site Planning. Water survival facilities are typically combined with physiological training facilities as aviation survival training centers. See paragraph 4.2.1 for basic site planning data. Maintenance and chemical delivery accessibility is a primary concern for water survival facilities.

5.2.2 Architectural. Place emphasis on simple, straightforward functional solutions to both interior and exterior design and detailing. Careful interior planning and design are necessary to ensure the most effective learning environment. Space planning should result in a Furniture/Equipment Footprint with life safety considerations complying with NFPA 101.

Massing for water survival training facilities is affected by the high bay spaces for pool training devices, such as the dunking machine and helo hoist. If handled properly, excessive numbers of roof levels can be avoided by grouping high bays. Provide adequate floor to structure clearances. High bay areas must support excursion limits of equipment. Set height of the high bay area on the highest excursion limit anticipated in proposed training device(s) and on clearances for lifting devices during installation/removal and operation. Seismic design may require limits on the height of structures and special design configurations. Follow guidelines given in MIL-HDBK-1001/1.

5.2.2.1 Adjacency. Place high bay areas of the same or nearly equal height adjacent to each other and combine into one level for simplification of roofing and structural systems and resultant cost savings.

5.2.2.2 Circulation. Direct emergency access by medical personnel is required in critical training areas. Separate trainee circulation patterns from instructors where possible. Water survival training facilities typically support wet and dry trainee pedestrian traffic. Circulation within the locker/dressing area should not require passage through the showers to enter the pool and circulation to the toilet area from the pool should be direct, without passing through the locker/dressing/shower area. Identify excursion limits of all training equipment near circulation paths to eliminate dangers to personnel.

5.2.2.3 Functional Priorities. The most important sections of the facility are those that are directly required to perform the training mission. Other portions of the facility are secondary. Space groupings in order of importance are:

a) Training rooms (e.g. classrooms, pool room, etc.) required to perform the training.

b) Direct support spaces, such as storage rooms for classroom materials, pool equipment rooms, instructors' offices, etc., without which the training would be degraded or impossible to perform.

c) Indirect support spaces, such as lounges and administrative offices, without which training can be accomplished, but at a cost in the efficiency of the training organization.

5.2.2.4 Spaces and Characteristics. Water survival facilities are typically combined with physiological training facilities as aviation survival training centers. Refer to Section 4 for core building spaces data.

Chemical Storage. Area should be separate and should have a minimum 7 feet clear ceiling height. In absence of other criteria, provide a minimum of 5 square feet for the first 10,000 gallons of pool water plus one additional square foot for each additional 3000 gallons or portion thereof up to a total area of 100 square feet. Make provision for dry storage of all pool chemicals in waterproof containers or above the floor on shelves, pallets or dollies. Plan area so that chemicals which can react with other pool chemicals are stored separately arranged to permit easy cleanup of spills.

Corridors. Six feet wide corridors are recommended from entry to locker room and from locker room to pool area to accommodate student class groupings.

Divers' Locker and Equipment. Space is required for safety divers assigned to ASTC's.

Equipment Drying and Storage. A drying environment is required separate from the moisture laden pool environment. Storage and drying area must have high capacity HVAC systems to provide heat, humidity removal, and air volume to dry flight suits, survival vests, flight helmets, and boots which are stored here for daily use by students. Design area to accommodate storage and drying racks with long pegs for items such as boots and helmets. The area must be large enough to allow good air circulation around all stored items. One or two commercial washers are used here to process flight suits which are worn by students into the pool. Washing the suits in non-pool water is necessary to remove pool chemicals and prolong their usable lives. Provisions for drying 40 sets of clothes in 12 hours are desirable.

Equipment Repair. This space is used for repair of equipment used in the drying and storage area described above plus parachute drag material and other pieces of cloth-type training equipment. Commercial sewing machines and other tools are used here by aircrew survival equipmentmen (PR) in maintenance and repair for the devices.

Janitor's Closet. Specify galvanized or other corrosion resistant shelving.

Lobby. Bulletin boards and directories in lobbies exposed to moisture migration from the pool area must have moisture seals and non-corrosive construction.

Locker Room. Provide one full height open wire type locker, 2'-0" wide, and clothes hook for each military staff person and garment changing area with wall mounted number 8 finish stainless steel mirror. Provide permanent built-in curb mounted lockers except where future flexibility is required. Minimize blind spots and/or visual obstructions except as required for privacy.

Men Students' Locker Room. Use built-in lockers on curbs for ease of maintenance unless future flexibility is expected. Provide adequate lockers and clothes hooks for trainee occupancy load and adequate garment changing area with wall mounted number 8 finish stainless steel mirror. Minimize blind spots and/or visual obstructions except as required for privacy.

Men Students' Showers. Private shower stalls should be used. Separate shower room from adjacent area with a threshold. Provide towel hooks in the drying area and soap dispensers and toiletry shelf in each stall.

Men Students' Toilet. Specify ceiling hung partitions for easier cleaning and drainage to eliminate rusting of floor mounts. Provide solid plastic partition finish for better hygiene and graffiti resistance. Provide shelf for temporary stowage of hand carried items such as hats and books.

Pool Maintenance.

Pool Equipment. If located at a subterrain elevation, provide a stair for maintenance and a well from the service loading platform for removal of large equipment.

Pool Storage. Locate adjacent to the pool deck with direct access to the deck and to the service ramps or loading platforms.

Pool/Training. Provide a high bay clearspan area with accommodation of training device excursion limits. The recommended deck to ceiling clear height is 24'-0". Note that since moisture laden air will collect in the highest points of the space, corrosion resistant materials should be specified and air circulation should be coordinated with the mechanical engineer.

a) Pool Deck. Minimum deck width is 12 feet (3600 mm) except where the configuration and mounting and projecting elements of training devices are determinate. Locate a water fountain within 50 feet of the pool basin. Design for positive drainage and easy cleaning by hosing. Surface water must drain off quickly, especially in the area where instructors and students congregate. Locate drains between 5 feet (1500 mm) and 8 feet (2400 mm) from the pool edge to serve a maximum of 250 square feet (23.2 square meters). In high density areas, such as locker/shower room passage area and instructional grouping areas, drains should serve a maximum of 150 square feet (13.9 square meters). The entire deck area should slope to the nearest drain. The deck itself should slope away from the pool a minimum of 0.125 inch per foot (1 mm per 100 mm) and preferably 0.25 inch per foot (2 mm per 100 mm) in high density areas. See also the Recommended Finishes table and signage paragraph.

b) Pool Basin. Use poured-in-place concrete, a combination of poured-in-place concrete and metal side walls, or pneumatically applied concrete. The top of the pool wall must be uniformly level and designed with bull-nosed coping or some other type handhold around the pool perimeter. Side and end walls should be vertical. Six inch rounded corners are required at wall junctions and wall and floor junctions. See also the Recommended Finishes table. A 14'-0" deep pool depth is recommended.

c) The 9D5 Dunker trainer is shown on facility plate 171.20. If possible, the pool layout should have a dogleg arrangement to accommodate the 9D5 Dunker.

Women Students' Locker Room. Use built-in lockers on curbs for ease of maintenance unless future flexibility is expected. Provide adequate lockers and clothes hooks for trainee occupancy load and adequate garment changing area with wall mounted number 8 finish stainless steel mirror. Minimize blind spots and/or visual obstructions except as required for privacy.

Women Students' Showers. Provide towel hooks in the drying area and soap dispensers and toiletry shelf in each stall. Private shower stalls should be used. Separate shower room from adjacent area with a threshold.

Women Students' Toilet. Specify ceiling hung partitions for easier cleaning and drainage to eliminate rusting of floor mounts. Provide solid

plastic partition finish for better hygiene and graffiti resistance. Provide shelf for temporary stowage of hand carried items such as hats and books.

5.2.2.5 Interior Design. NAVFAC DM-14.01 provides interior design guidance. Fully integrate interior design with the work of other design and engineering disciplines at all stages of the facility design process. Provide only those finish systems which have a proven track record of use and testing. Materials and finishes selection criteria should balance all factors related to installation and usage: initial and life cycle costs, aesthetics, acoustics, comfort, durability, safety and ease of maintenance, mold and mildew resistance, and cleaning procedures. Corridors, for example, must be designed for wet and dry trainee traffic. Since the relative humidity of pool enclosures is quite high, materials used must withstand undesirable effects. Refer to appropriate tables for suggested interior finishes. Water survival facilities are typically combined with physiological training facilities as aviation survival training centers. Refer to paragraph 4.2.2.5 for basic data.

a) Floors. Consider safety and skid resistance, noise impact, traffic bearing requirements, and the effect of moisture and chemicals that flooring will be subjected to. Water survival training facilities are subject to wet pedestrian traffic. Slope floors to drain at the pool equipment room, pool deck, toilets, lockers, and shower rooms. Pool deck should sloped at a grade of 1/4 inch to 1/2 inch per foot to a deck drain or sheet drain to deck edge. Avoid unfinished concrete in moisture prone areas due to the growth encouragement of fungus and attraction of other undesirable materials. If concrete floors are utilized because of budgetary or other justifiable reasons, they should not be troweled smooth (float finish) as this finish produces a slippery surface. Embossed and tinted concrete may be considered in dry areas as well as coated concrete where appropriate. Consider also troweled seamless slip-resistant floor coverings which can introduce color to the interior design package. Specify a coefficient of friction no less than .7 per ASTM C1028 for ceramic tile floors. Provide easily maintained floors. Carpeting may be used in accordance with Table 2.1, Recommended Finishes, MIL-HDBK-1001/1, and MIL-HDBK-1008C.

b) Ceilings. Metal slat ceiling systems with open joints are prohibited, since they do not allow heat to collect at heat detectors. Finished dropped ceiling in the pool area is discouraged. Use mildew and corrosion resistant finishes such as hot-dipped galvanizing, epoxy, or urethane. Choose color to enhance interior lighting.

c) Pool/Training area walls. Any factor which reduces the pool's effectiveness due to color alteration should not be permitted. Use chromatic finishing materials which do not alter the natural light blue color of a well maintained pool and likewise create the clear, warm atmosphere of a natatorium. Select colors which compliment the natural water color and comply with established principles concerning the reaction of colors to water. The most favorable colors are the cool (not cold) blues, blue-greens (sea), and turquoise. Avoid colors that inhibit natural water color such as strong yellows, gray/greens, yellow/green (pea), beiges/tans, and strong colors such as red, red blues, and oranges. Choose matte finishes where reflections are undesirable.

Table 5.1
RECOMMENDED FINISHES - WATER SURVIVAL TRAINING FACILITIES

| ROOM | WALLS | FLOOR | BASE | CEILING | REMARKS |
|---|---|---|---|---|---|
| EQUIPMENT DRY/STOR | PTD | CNC/SLR | NONE | PTD | 1,8 |
| EQUIPMENT REPAIR | PTD | VCT | RUBBER | EXP&P | |
| FLAMMABLE STORAGE | PTD | CNC/SLR | NONE | EXP&P | |
| LAUNDRY | PTD | VCT | RUBBER | EXP&P | 1 |
| MEN STUDENT LCKRS | PTD | CT | CT(cove) | EXP&P | 1,4 |
| MEN STUDENT SHWRS | CT | CT | CT(cove) | PTD | 1,4,6 |
| MEN STUDENT TOIL | CT | CT | CT(cove) | PTD | 1 |
| POOL BASIN | CT | CT | CT(cove) | NA | 2 |
| POOL MAINTENANCE | PTD | CNC/SLR | NONE | EXP&P | 1 |
| POOL EQUIPMENT | PTD | CNC/SLR | NONE | EXP&P | 1 |
| POOL STORAGE | PTD | CNC/SLR | NONE | EXP&P | 1 |
| POOL/TRAINING | CT(wsct) | CT | CT(cove) | PERFMTL | 1,3,7 |
| WOMEN STU LOCKERS | PTD | CT | CT(cove) | EXP&P | 1,4,5 |
| WOMEN STU SHOWERS | CT | CT | CT(cove) | PTD | 1,4,6 |
| WOMEN STU TOILET | CT | CT | CT(cove) | PTD | 1,4 |

Note: See Glossary for finish material abbreviations.

Remarks:
1. Provide semi-gloss or epoxy paint with good cleanability and mildewcide. Consult manufacturer on mildew additives on countereffects such as brittleness and other averse effects on longetivity. Paints containing Phenyl Mercuric Acetate are prohibited.
2. Thin set epoxy terrazzo is also an excellent finish and marbleized plaster and epoxy coatings can be considered. Where budget and cost are constrained, consider a basic epoxy finish with tile used for accent, pool markings, edge of deck (curb), and a minimum 6" glazed frost proof tile or other easily cleanable surface at the normal water line. Pool plaster or coating finishes are generally medium cost and have a service life of 4 to 6 years. The advantage of tile or terrazzo is durability and lower maintenance expenditures resulting in less training down time.
3. See ceilings and walls paragraphs for other acceptable materials.
4. Specify unglazed 1"x1" tile floor with minimum slope of 0.25 inch per foot (2 mm per 100mm) toward drains. Provide threshold between shower area and other areas.
5. Wall tiles should be 6"x6" glazed and floor should be 1"x1" unglazed mosaic. Wainscot should be 7' high minimum.
6. Drying benches and standing areas should be located only on ceramic tile surfaces.
7. Grid system must be corrosive resistant with respect to high humidity.
8. Special consideration is required for high humidity and dripping water on walls, floors, and ceilings.

d) Pool basin. Matte white affords the best visibility and strongest safety factor for the pool basin lining. Light blue will enhance water color and help camouflage blemishes caused by water impurities but it will lessen the clarity of underwater markings. Underwater markings should be a dark blue (cobalt) or black.

e) Pool deck. Avoid heavy or dark color tones for the field. A dark blue accent band at the gutter creates both a safety line and also adds a touch of natural color to the water.

5.2.2.6 Signs and Markings. Water survival facilities are typically combined with physiological training facilities as aviation survival training centers. See paragraph 4.2.2.6 for basic data. Safety reinforcement is a primary purpose for signs in a water survival facility.

a) All variations in pool depth of one foot (300 mm) should be marked on the pool deck. Markings may also be located on the adjacent walls.

b) Pool Deck. Bulletin boards are especially important in training facilities to control clutter and readily accommodate changing information throughout the building. Provide tack board surfaces or similar surfaces for unanticipated messages, signs, posters, announcements, etc. at the high traffic area of the pool deck.

c) Pool Rules. Consult the pool user for listing of rules and show sign in design drawings. Include sanitary, safety, and emergency information.

d) Operational Instructions. Instructions, including the valve schedule, must be encased in a waterproof covering and permanently posted on the equipment room wall.

5.2.2.7 Windows and Natural Lighting. Consider windows, monitors, and clerestories for internal diffused natural light. Skylights are not permitted. Natural light is highly desirable. Light monitors, light wells, and clerestory units should be used to provide a majority of light required for daytime use. In the pool area, locate fenestration to avoid reflected glare from the water surface, which can prevent instructors from seeing the pool bottom; therefore, do not locate glazed areas on the wall directly opposite instructor stations. Specify corrosive resistant frames such as aluminum and use hardware such as brass, bronze, or stainless steel within the pool enclosure. Seal window frames to prevent moisture migration. Natural light should be concentrated on the ceiling or wall areas toward the sides and behind the instructor stations. Since glazed areas attract condensation within the pool enclosure, use double-glazing or gutters to collect condensation. Consider, as an option, a 1/2" thick heat treated glass underwater observation window.

Use of interior view windows should be restricted due to the condensation problems.

5.2.2.8 Doors and Hardware. Locate a grade-level, 6 feet (1800 mm) wide doorway for maintenance entrance to the pool in addition to any removable panels or 14'-0" high roll-up steel door for training device installation and removal. Specify tempered glass and corrosive resistant door frame and hardware such as brass, bronze, or stainless steel for use within the pool

enclosure. Steel should be avoided unless it is galvanized and coated with high-performance epoxy paint. Doors separating the pool enclosure from the rest of the building must be weatherstripped to effectively retard the flow of vapor. Seal door frames to prevent moisture migration.

5.2.2.9 Thermal Insulation and Vapor Retarders. Locate vapor retarders with care in view of the thermal differentials associated with extremely humid interior environments. Vapor retardants must have a perm rate of 0.10 or less. Locate vapor retarder wall and ceiling systems to prevent damage to structural and insulating elements and to seal the pool enclosure from adjacent spaces in the facility. Seal all penetrations or junctures with other materials where vapor retardation is jeapordized. Coordinate the vapor retardant wall system with mechanical and electrical items such as switchgear, piping, and ductwork. Indoor pools require significant room ventilation to control indoor humidity caused by the large amount of evaporation. The most effective method of controlling evaporation is to cover the pool when not in use. See Figure 4.

5.2.2.10 Handicapped Design. Provide barrier-free access to civilian work spaces and other spaces intended for public access. Design facilities to locate handicapped access spaces on first floor only, unless the size of the facility's administrative and other accessible areas requires a second floor. Areas hazardous to handicapped persons need not be accessible. Comply with the more stringent application of current criteria in either the Uniform Federal Accessibility Standards (UFAS) or the Americans with Disabilities Act Accessibility Guidelines (ADAAG).

5.2.2.11 Stairs, Ladders, and Rails. Avoid checkered plate treads where wet traffic occurs. Components must resist corrosion from excessive moisture. Provide Type 304 stainless steel with 18-8 stainless steel hardware for pool access ladders and railings. Ladder clearance from face of pool wall should be between 3 and 6 inches.

5.2.2.12 Elevators. Evaluate probable air moisture content in the elevator environment and specify NEMA Type 4x components where practical.

5.2.2.13 Walls. Exterior masonry walls should be double wythe construction, and the exterior surface of the inside wythe should be sealed with dampproofing. Vapor migration calculations must be used to determine proper placement of insulation and to control efflorescence on exterior brick.

Walls throughout the interior of the building must be masonry due to the migration of moisture. Plaster and GWB are not acceptable for any locations. Acceptable materials for the pool area include structural-glazed or ceramic tile or glazed CMU, CMU with block filler and epoxy or urethane coatings, all of which should be integrated with acoustical control elements. The first 10 feet (3000 mm) of wall height should withstand general abuse and enhance sanitation with consideration of rounded corners and appropriate surface treatment.

5.2.2.14 Acoustical Control. Comply with DM 1.03, Architectural Acoustics. Hard surfaces in pool training areas contribute to an extremely noisy environment which is not conducive to a teaching function. Design to control reverberation and echoes in the pool enclosure to ensure adequate speech intelligibility for instructional use and safety.

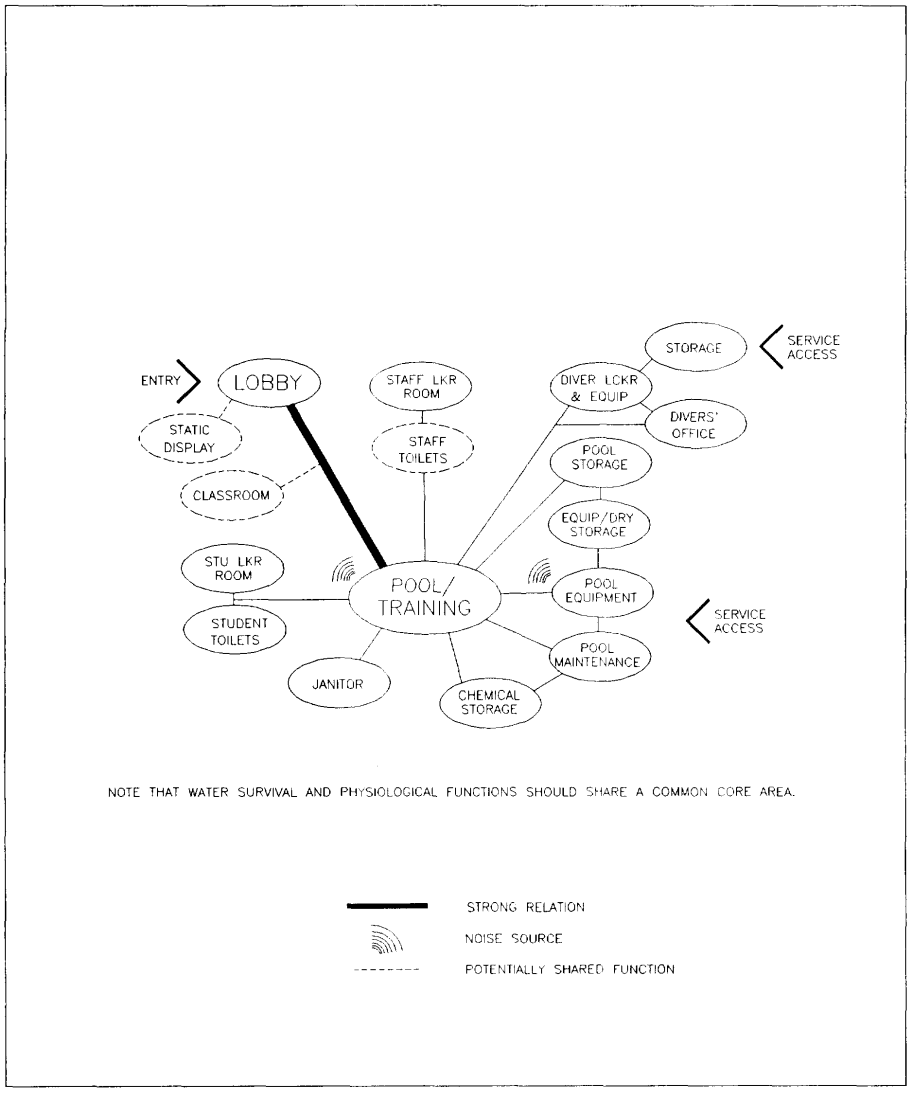


FIGURE 4
AVIATION SURVIVAL TRAINING CENTER–WATER SURVIVAL
BUBBLE DIAGRAM

a) Reverberation control. For most pool enclosures, the mid-frequency reverberation time should be less than or equal to 1.8 seconds.

b) Selection of Acoustical Materials. Account for the effects of humidity. Wall materials such as sound absorbing masonry units, perforated structural clay tiles, and moisture-resistant fiber panels and ceiling materials such as perforated metal roof deck with fiberglass filled corrugations and moisture-resistant, cement-fiber units are appropriate.

Avoid suspended or applied acoustical tile ceilings which can introduce problems due to condensation and corrosion.

5.2.3 Landscape Architecture. The framework for planning and design of all landscape architectural elements is found in the activity Master Plan and more specifically in the Base Exterior Architecture Plan (BEAP). General guidance for all design elements can be found in NAVFAC P-960. Landscape design must enhance positive image for the facility and should direct pedestrians to a primary entry. Design for minimal maintenance. Provide landscape fabric for weed prevention. Select hardy specimen species indigenous to the area. Locate hose bibbs convenient for additional irrigation.

5.2.4 Civil. Distribution piping (utilities, refrigerant, condenser water, etc.) should enter the building only through mechanical spaces.

5.2.4.1 Roads, Parking, and Walkways. These are three of the most land consuming uses on a site. Negative visual impact can be minimized by locating facilities conveniently to each other, encouraging pedestrian use and other non-vehicular modes of access.

Vehicular or pedestrian paving should be in character with a safe, functional and visually pleasing landscape. The sharing of parking and road requirements will minimize total impact. Small parking lots are usually preferable to large lots, since they allow for conforming to the natural topography and other site features and are visually less obtrusive. Provide appropriate paved area with load capacity and adequate maneuvering space for occasional fire truck access and parking area where facilities are used to train local activity fire department personnel. Provide ramps at curbs along routes leading to storerooms to facilitate wheeled access. Accommodate training device transportation into and out of the building through adequate turning radii and appropriate loading facilities. Provide vehicle protective barriers for light standards and fire apparatus. Designate special parking spaces for emergency medical service vehicles, pilot trainees and device contractor as required by the user.

Pedestrian access to training facilities is normally restricted to a single entrance point, due to security criteria. Determine if egress is permissible through secondary exterior doors and, if so, accommodate with walkways. OPNAVINST 5530.14B prohibits parking of privately owned vehicles within 15 feet of any building. Include concrete surface spaces for bicycle racks and motorcycles. Storm drainage and other grates must be oriented with parallel slots perpendicular to the paths of bicycles.

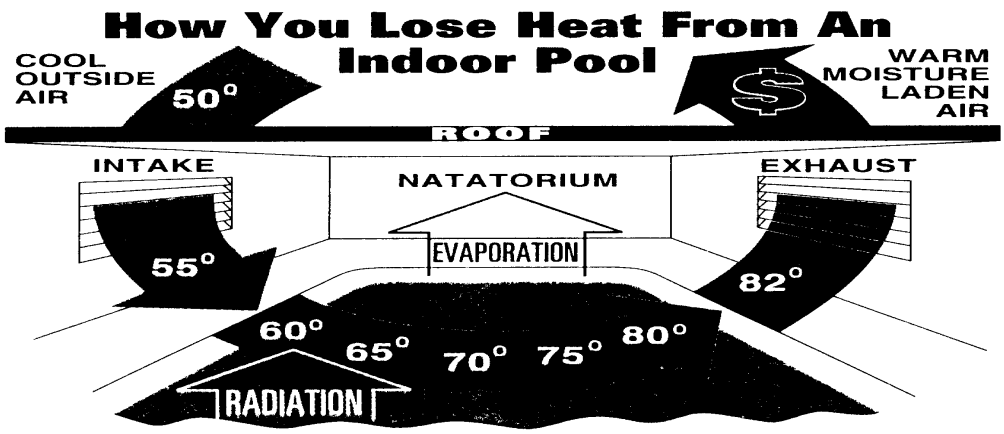


FIGURE 5
INDOOR POOL ENERGY LOSS

5.2.4.2 Handicapped Access. Provide curb ramps, access aisles, and handicapped parking spaces near accessible entrances.

5.2.5 Structural. Design concrete work in accordance with Portland Cement Association (PCA) and American Concrete Institute (ACI) design manuals. Special considerations are required for training equipment loads at poolside. Training equipment incorporating motion systems will impose static and dynamic forces upon the facility structure.

Consider the effects of hydrostatic pressure on the pool basin both in design and for the construction process. Use well points for high water table installations.

5.2.5.1 Floors. Design floor slabs along the travel path of any equipment to withstand the heaviest wheel loads anticipated during the installation, in compliance with criteria in MIL-HDBK-1002/2.

a) Pool/Training. Consider pressure relief valves in the pool basin during construction for temporary relief of hydrostatic pressure. Seal off valves after construction completion. Indicate any floor joint locations. Consider casting walls in one lift to eliminate horizontal construction joints. Ensure that any water stops are aligned and not crushed or stepped on during construction. Where expansion joints are used, extend them in a straight line across the floor and up the walls.

b) Pool Equipment and Mechanical Rooms. Isolate the floor slabs from the remainder of the facility.

5.2.6 Heating, Ventilating and Air Conditioning. Comply with MIL-HDBK-1003/3 and refer to MIL-HDBK-1008C for coordination with fire protection systems. Distribution piping for utilities should enter the building only through the mechanical rooms.

5.2.6.1 Design Conditions. For spaces not listed below, design conditions should be in accordance with military criteria.

a) Pool/Training. The pool enclosure’s winter indoor design temperature should be a minimum of 2 degrees F higher than the pool water design temperature to minimize the evaporation rate. The indoor relative humidity design condition should be 60% (maximum).

b) Chemical Storage. Obtain and follow the environmental conditions required for the safe storage of chemicals.

5.2.6.2 Ventilation. Comply with the latest edition of ASHRAE Standard 62.

a) Pool/Training. Adequate ventilation is essential for the control of temperature and humidity in the pool enclosure. Provide a negative pressure in the pool enclosure to minimize chlorine odor and prevent moisture migration to other spaces in the building.

b) Pool Equipment Rooms/Mechanical Rooms. Investigate any special ventilation rates required for occupational safety. If none exist, provide 10 air changes per hour or an exhaust rate to limit the temperature rise to 10 degrees F above the summer design dry bulb, whichever is greater.

c) Chemical Storage. Ventilation rates are dependent on the type and quantity of chemicals stored. Provide dilution ventilation for health and for reducing vapors below the lower explosive limit. See the latest edition of the Industrial Ventilation manual by the American Conference of Governmental Industrial Hygienists for calculation procedures. Ventilation outlets from the Chemical Storage room should be remote from areas used by personnel, windows, and any ventilation inlets. Unless continuous ventilation is required for the particular chemicals stored, forced ventilation equipment should be wired into the light switch.

5.2.6.3 Air Distribution System

a) Minimum Air Requirements. Pool/Training spaces without spectator areas should have a minimum of 4 to 6 air changes per hour. Pool/Training spaces with spectator areas should have a minimum of 6 to 8 air changes per hour. See the ASHRAE Applications Handbook for further guidance.

b) Airflow Path. Air distribution system should be designed to minimize air motion or drafts in the pool area. When spectator areas are included, those areas should have separate supply air. Do not return or exhaust air from the pool through spectator areas. Upward perimeter air distribution along pool windows/walls minimizes downdraft and condensation buildup. Return and exhaust outlets should be from the highest practical point, due to the water vapor’s tendency to rise.

c) Materials. Ducts and air devices located in pool areas and chemical storage rooms should be of corrosion-resistant materials. Aluminum and galvanized steel with a high-performance epoxy paint are effective products in the pool area’s highly corrosive environment.

5.2.6.4 Zoning. The pool enclosure should be on separate HVAC systems from the systems provided for other areas due to the pool’s dissimilar environmental conditions and potentially different operating schedule.

5.2.6.5 Specialties. All components of HVAC systems exposed to the humid, corrosive air of the pool or corrosive chemicals/vapors should be corrosion-resistant.

a) Pool/Training. Provide mechanical dehumidifiers with energy recycling features to control humidity. Evaluate the economies in providing dehumidifier controls and features which will allow the energy recovered to be used to heat pool water, in addition to reheating pool air. It is likely that supplemental heat, in addition to the heat recovered during the dehumidification process, will be required to maintain pool water temperature and pool enclosure air temperature under winter design conditions. Also, evaluate the merits of providing remote condensers with the dehumidifiers to allow the equipment to function as an air conditioner during warm-humid months.

b) Equipment Drying and Storage. Provide dehumidification capabilities integral with HVAC system serving the drying area or as a separate system.

5.2.6.6 HVAC Controls

a) Pool/Training. Dehumidifiers should be controlled to maintain relative humidity of the pool enclosure air between 50% and 60%. Relative humidities lower than 50% are undesirable because of the evaporative cooling effect on students coming out of the pool and because of the increased pool evaporation rate. Relative humidities above 60% enhance the chances for architectural and structural damage due to condensation and corrosion problems. Relative humidity levels in excess of 60% also create moisture levels conducive to the growth of mold and mildew.

b) Equipment Drying and Storage. Control humidity to facilitate gear/equipment drying.

5.2.6.7 Noise. High noise levels in the pool area prevent adequate instruction. Comply with Army TM5-805-4 where spaces and/or sensitive equipment cannot tolerate noise and/or vibration.

5.2.7 Plumbing

5.2.7.1 Pool Water Treatment, Recirculation, and Filtration. Each individual pool should have its own water treatment and filtration system which is operational at all times during recirculation operation.

a) Water Supply (Pool Fill and Water Makeup). Direct connection between the water supply and the pool is prohibited. The water supply line should supply the surge or balance tank, terminating at least 6 inches above the water level. Automatic pool water makeup should be provided by maintaining the water level in the tank at the same elevation as the pool flow line. A backflow preventer should be provided in the tank’s supply water line.

b) Overflow. A surge tank should be provided to accommodate overflow resulting from water displacement during periods of heavy pool population. The tank must be designed to handle the combined surge capacity of pool occupants and their equipment, plus 5%. Main drains and overflow from the perimeter overflow system should return to the balance or surge tank. No pool deck water should return to the recirculation system. Pool deck drainage should be discharged to an approved waste system.

c) Recirculation. A recirculation system should be provided complete with recirculation pumps, filters, disinfecting and other water conditioning equipment. The capacity of the recirculation system should produce a complete turnover of the entire pool’s volume in six hours. See the Facility Plate entitled Typical Piping Diagram.

1) Pump. Recirculation pump should be of corrosion-resistant materials. Provide a corrosion-resistant hair and lint strainer at the inlet of the circulating pump.

2) Piping. The recirculation system should be designed for a maximum velocity of 6 feet per second in mains and branches.

3) Valves. Recirculation valves should be labeled for normal and backwash positions. Valves should be butterfly or ball type for two position operation. A balancing valve should be installed in pump discharge

lines. Valves located under concrete slabs should be set in a pit having a least dimension of five pipe diameters with a minimum of at least 10 inches and fitted with a cover.

4) Recirculation Pattern. The normal recirculation pattern should be 50% flow through the overflow or skimming system and 50% through the main drains. The recirculation system must be designed with adequate capacity such that 100% of the recirculation flow can pass through the overflow or skimming systems and 100% through the main drains. Pool water inlets should be located to produce uniform circulation of water through the entire pool. Inlets should be capable of providing 100% shutoff for testing of the piping system after the pool construction is complete. Provide one inlet per 15 feet of pool perimeter. Flow through each inlet should be adjustable. See Drains and Overflow/Skimming Devices for information on pool water outlets.

5) Overflow/Skimming Devices. Total flow rate capacity of overflow/skimming devices must be at least 100% of the required filter flow for the recirculation system. Perimeter overflow gutters are preferred.

6) Drains. Two outlet drains should be provided at the deepest section of the pool. The spacing between the drains should be a minimum of 6 feet. Each drain should be large enough to empty the pool completely in a maximum of 4 hours. Each drain’s grate area must be such that the maximum velocity of water passing through the grate not exceed 1.5 feet per second, even when flow is through only one drain. The openings in the grating should be no larger than one-half of an inch wide.

d) Filtration. Filtration is required for the removal of suspended particles and clarifying pool water.

1) Filter Type. High rate pressure sand filters with a flow rate of 15 gpm per square foot of sand bed area are preferred. Diatomaceous earth filters require special disposal of waste generated during backwashing as well as respiratory protection. While cheaper from an initial cost standpoint, cartridge type filters are labor intensive.

2) Accessories. A pressure gauge should be provided on the inlet and outlet lines of each filter. A rate-of-flow indicator should be provided on the outlet line of the filter system. Air-relief devices should be provided at the highest point of each filter tank. An access manhole should be provided near the top of each filter tank.

3) Backwashing. Backwashing of sand filters should be automatically controlled. Automation will ensure complete cleaning in multiple sand filter configurations and eliminate disruptions to training schedules. Backwash water should discharge to waste. A sight glass should be provided for viewing the clarity of backwash water.

e) Pool Water Heating. Swimming pools are normally designed for a water temperature between 75 degrees F and 82 degrees Fahrenheit, with 80 degrees Fahrenheit being most desirable. Water survival training may necessitate higher or lower temperatures. Investigate all training techniques and procedures to ensure the pool’s heating equipment is appropriately sized and controlled for intended use. Calculations must address the desired heat pickup time. A pressure relief valve should be

installed on the discharge of the water heater when a valve is installed between heating equipment and the pool.

f) Chemical Treatment. Automatic chemical treatment should be provided to maintain water standards and disinfection. The point of application should be in the recirculation line, downstream of the filter, pump, heater, and other accessories.

1) Ph balance should be monitored and controlled automatically. The Ph level of the pool should be maintained between 7.4 and 7.6. Oxidation suffers above Ph 7.6 and corrosion and irritation increase below Ph 7.4.

2) Chlorine. Sodium hypochlorite and calcium hypochlorite are two products commonly used for maintaining desired chlorine levels. Gas chlorination is not permitted. Chlorine residual should be monitored and controlled automatically. Adjustable chlorinating equipment should be provided with a capacity to maintain 0.6 to 5 ppm of free residual chlorine in the pool. Pools used for water survival training will normally be maintained with free residual chlorine levels between 1.0 and 3.0 ppm. Chlorination equipment should have the manual capability of raising the chlorine level for super-chlorination. Super-chlorination is periodically required to destroy chloramines. Elimination of chloramines allows the chemical treatment system to maintain disinfection and oxidation while also minimizing irritants and chlorine odor.

3) Total Alkalinity. Chemical treatment should provide for manual feed of chemicals to control total alkalinity. Total alkalinity will normally be maintained in the 80 to 150 ppm range. Muriatic acid is used to lower total alkalinity. Sodium bicarbonate is used to raise total alkalinity.

4) Calcium Hardness. Chemical treatment should provide a means for manual feed of chemicals to control calcium hardness. Calcium chloride is used to raise calcium hardness. Lowering calcium hardness is accomplished through dilution with make-up water.

5.2.7.2 Vacuum System. A water-operated, vacuum cleaning system should be provided for the pool, complete with cleaning tools, hose connections, and piping connected to the suction side of a vacuum cleaning pump. The vacuum hose connections should be submerged and located so that all pool surfaces may be reached with the cleaning tools. The vacuum cleaning system should discharge from the pump to the approved waste system. In lieu of the vacuum cleaning system described above, automatic pool cleaners and portable vacuum cleaner systems with approved filters should also be considered.

5.2.7.3 Compressed Air Systems. Compressed air systems may be required for diving tanks. See NAVFAC Design Manual 3.05, Compressed Air and Vacuum Systems, for guidance in the design of compressed air systems.

5.2.7.4 Specialties. The applicability of pool covers should be evaluated, especially for pools with sporadic use. Pool covers reduce the evaporation rate and, thus, reduce humidity levels, make-up water, and pool water heating requirements. Covers should be removed during breakpoint chlorination to allow the escape of gases produced during chemical reactions associated with breakpoint chlorination.

5.2.8 Electrical. Typically, specific electrical requirements for training facilities and/or training device(s) are contained in the manufacturer's technical manual. Applicable MIL-HDBK-1004 series provides general guidance on electrical engineering. Consult these in conjunction with the current editions of NFPA 70 and ANSI C2.

a) Classrooms. Locate 120 volt convenience outlets for use of portable audiovisual equipment. Provide conduit stub-outs with pull wire in ceiling space for future ceiling mounted audiovisual aids, such as projection systems. Locate remote control and microphone outlets off-center on front wall, convenient to the podium. Provide two-way communications from classrooms to administrative area or security desk, if required by the user.

b) Corridors. A shock hazard exists from convenience outlets in areas where floor buffers are used. Provide locking type outlets and metal device covers mounted high above splash zones.

c) Visitor Control. Consider an intercom which includes capacity to receive calls from rooms where medical emergencies are likely to occur.

d) Maintenance Repair Shop. Provide GFCI 220 volt service. See collateral equipment list.

e) Pool/training. Consider a microphone outlet at the view window and underwater speakers for instructors to communicate with students. Locate an switch convenient to the pool deck to sound an alarm in the administration area for emergencies. Ground all exposed metal used for ladders, handrails and other deck equipment in accordance with the National Electrical Code.

5.2.8.1 Telecommunications. Provide a structured telecommunications system including interior and exterior conduits, cabling, pull wire, telecommunications backboards, and outlets. Provide a telecommunications outlet for each elevator in the facility. Refer to MIL-HDBK-1012/3 for interior telecommunications cabling. Locate outlets as directed. Consider telephone and communication outlets in maintenance areas and dedicated lines at devices where networking is anticipated. Accommodate any special user or government contractor communication requirements which may require intercom features integrated into the telephone system.

5.2.8.2 Lighting. Provide fluorescent fixtures with battery packs and/or wall packs for emergency lighting, in lieu of a central system.

a) Classrooms. Lighting controls (dimmers and/or selective lamp and ballast switching) with discrete circuits for the front of the room, allow for effective visual use of television monitors, projectors, view graphs, etc. Use spectrum ranges appropriate for classroom settings. Emergency lighting is required as a safety precaution for operation of equipment during power failures.

b) High Bay. In high bay areas, include provisions for maintenance access to fixtures for repair and re-lamping, especially over the pool area. Consider wall mounted lighting located at a level that allows servicing by means of a 6 feet stepladder.

c) Pool/training. Skylights and clerestories are important considerations regarding natural illumination.

Where underwater lighting is required, fixtures and lamps should be selected to provide 100 lamp lumens per square foot (0.9 square meter) of water surface. The lights should be located 2 feet (600 mm) below the water, measured to the centerline. Fixtures should be set at an angle of 15 degrees downward to reduce surface glare. Fixtures should be installed with sufficient cable to permit repair or re-lamping on the deck of the pool.

Fixtures used for pool surface lighting should be located as required for maintenance. Lighting fixtures should be directly accessible from the pool deck or from permanently installed catwalks to facilitate cleaning and re-lamping. Long life lamps and fixtures designed for corrosion resistant finishes should be used. Fixtures should be metal-halide for good color rendition. Use lower wattage lamps to allow dual lighting levels through switching. Use photocells to turn off lighting when lighting levels exceed 30 foot-candles.

Refer to Illuminating Engineering Society Handbook for illumination level recommendations.

5.2.8.3 Lightning Protection. Perform a lightning protection risk assessment on all aviation training facility types, in compliance with Appendix I of NFPA-780, to justify lightning protection when required by the regional Engineering Field Division. Comply with applicable sections of MIL-HDBK-1004/6.

5.2.8.4 Facility Low Voltage Power. Refer to applicable TFR or Technical Manual and comply with MIL-HDBK-1004/1 and MIL-HDBK-1004/4. Generally provide 480Y/277 volt, three phase, four-wire service to the facility along with dry type transformers to step voltage down for 120, 208 and 240 volt requirements.

5.2.8.5 Intrusion Detection System (IDS). IDS systems are not normally required; however, if needed they are procured and installed via contracts administered by NCIS. Coordinate with NCIS for facility planning, design and construction schedules. IDS systems including commercial power supply, utility and control wiring systems are considered personal property. Provide support system in the construction contract, to include conduit with pull wire and device boxes. IDS for Marine Corps projects are separately funded and managed and do not require NCIS coordination. Provide IDS support requirements and startup specification where required, in accordance with MIL-HDBK-1012/1.

5.2.9 Fire Protection. Comply with MIL-HDBK-1008C, UBC, and NFPA 99 and NFPA 101. Classroom facilities for Navy installations are considered "business" occupancies per NFPA 101. Assembly occupancies, conference rooms and classrooms with fixed seating and hypobaric chambers require special attention. Hypobaric oxygen storage requires a dedicated room conforming to NFPA 55, Standard for the Storage, Use, and Handling of Compressed and Liquefied Gases in Portable Cylinders. Provide visual fire alarm signals on a case by case basis, where ambient noise in classrooms can prevent hearing audible alarms. Requirements for sprinkler systems, carbon dioxide extinguishing systems, fire alarm systems and protection of electronic equipment installations, are determined by MIL-HDBK-1008C. Hand held

portable halon extinguishers are permitted; however, automatic halon extinguishing systems are not. Convey fire alarm signals to the base fire department via the base fire reporting system. Verify the type of system with the station fire department.

5.2.10 Safety. The design of all military facilities that serve as places of employment should conform to, or be consistent with, all applicable standards published under the OSHA of 1970. Note that Chapters 5 through 7 of this reference state that whenever construction criteria and OSHA standards conflict, "the standard providing the greatest degree of safety should govern." Obtain a System Safety Work Group (SSWG), PHL and RAC hazard rating established by the activity and found in the facility study. Typical hazards include equipment guards and clearances, carbon dioxide discharge and hydraulic systems.

Moving and electrically energized parts and pressurized hydraulic systems are primary concerns. Include a safety eyewash/shower in accordance with ANSI Z358.1 where hydraulic or other petroleum, oil and lubricant (POL) materials are used in the building. Provide drain and hood or curtain for flow testing eyewash/shower. Arrange for hydraulic pumps to shut down automatically if a leak or break occurs in the line at any point. Provide emergency shutoff switches for the hydraulic pumps at the instructor's station. Provide three feet safety clearances around training devices. Paint floor around any rotating device yellow and black and indicate the type of hazard, e.g., "Strike hazard-rotating device -stay clear."

Provide lifesaving equipment and stowage racks as follows:

a) A light strong pole not less than 12 feet long with a body hook.

b) A minimum 1/4" diameter throwing rope as long as one and one-half times the maximum width of the pool or 50 feet, whichever is less, to which has been firmly attached a U.S. Coast Guard approved ring buoy.

Provide 2 units of the above for pools exceeding 3000 square feet. (186 sq. m)

5.3 Environmental Requirements. For applicable discharge criteria, consult with the NAVFAC Criteria Office and the cognizant EFD. Refer to MIL-HDBK-1005/8. Design facilities to meet environmental requirements at federal, state and local levels. Obtain a MSDS on every toxic or suspected toxic product to be used at the facility and design in protective measures and ventilation methods. Comply with all applicable pollution abatement criteria.

Table 5.2
WATER SURVIVAL FACILITIES - HAZARDOUS MATERIALS DATA

| MATERIAL | QUANTITY ON HAND | HOW STORED? | CURBING? | USED FOR: |
|---|---|---|---|---|
| BROMINE TABLETS | 25-50# BUCKETS | TIGHT CONTAINER | NO, NOT A LIQUID | POOL WATER PURIFYING |
| CALCIUM CHLORIDE | 5-100# BAGS | COOL, DRY AREA | NO, NOT A LIQUID | RAISE HARDNESS |
| MURIATIC ACID | 50-BOXES W/4 GALLON JUGS EA. | ACID-PROOF CONTAINERS | YES | LOWER WATER Ph AND ALKALINITY |
| SODA ASH | 300# | COOL, DRY AREA | NO, NOT A LIQUID | |
| SODIUM BICARBONATE | 5-100# BAGS | COOL, DRY AREA IN TIGHT CONTAINER | NO, NOT A LIQUID | RAISE WATER Ph |

General Note: Above data is typical for the medium sized Water Survival Facility with training pool and dunking tank. Project and site specific requirements may vary.

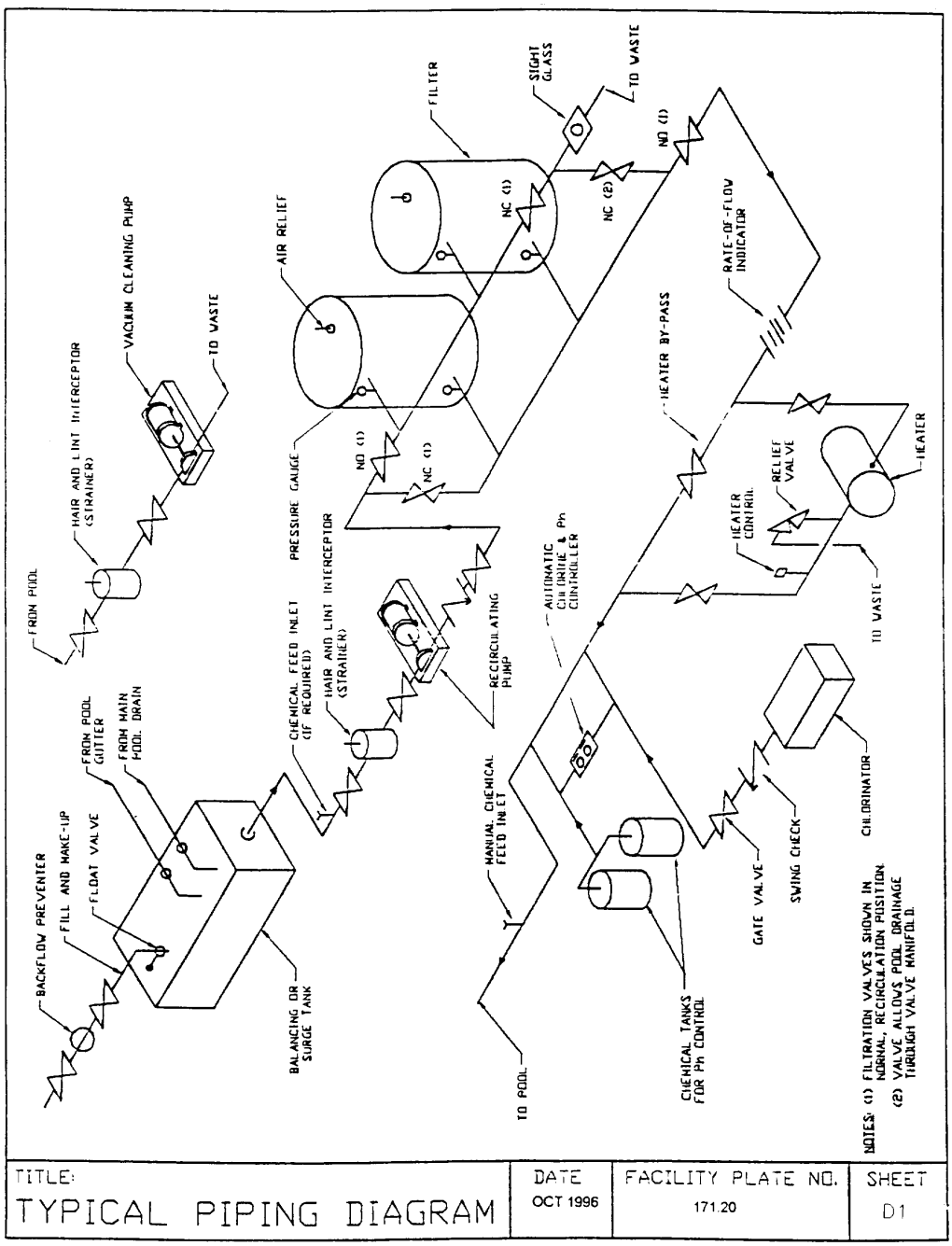
BACKFLOW PREVENTER
FILL AND MAKE-UP
FLOAT VALVE
FROM POOL GUTTER
FROM MAIN POOL DRAIN
BALANCING OR SURGE TANK
FROM POOL
HAIR AND LINT INTERCEPTOR (STRAINER)
VACUUM CLEANING PUMP
TO WASTE
CHEMICAL FEED INLET (IF REQUIRED)
HAIR AND LINT INTERCEPTOR (STRAINER)
RECIRCULATING PUMP
AIR RELIEF
PRESSURE GAUGE
NO (1)
NC (1)
FILTER
SIGHT GLASS
TO WASTE
NC (2)
NO (1)
MANUAL CHEMICAL FEED INLET
TO POOL
AUTOMATIC CHLORINE & Ph CONTROLLER
CHEMICAL TANKS FOR Ph CONTROL
HEATER BY-PASS
RATE-OF-FLOW INDICATOR
HEATER CONTROL
RELIEF VALVE
HEATER
TO WASTE
GATE VALVE
SWING CHECK
CHLORINATOR
NOTES: (1) FILTRATION VALVES SHOWN IN NORMAL, RECIRCULATION POSITION.
(2) VALVE ALLOWS POOL DRAINAGE THROUGH VALVE MANIFOLD.
TITLE:
TYPICAL PIPING DIAGRAM
DATE
OCT 1996
FACILITY PLATE NO.
171.20
SHEET
D1

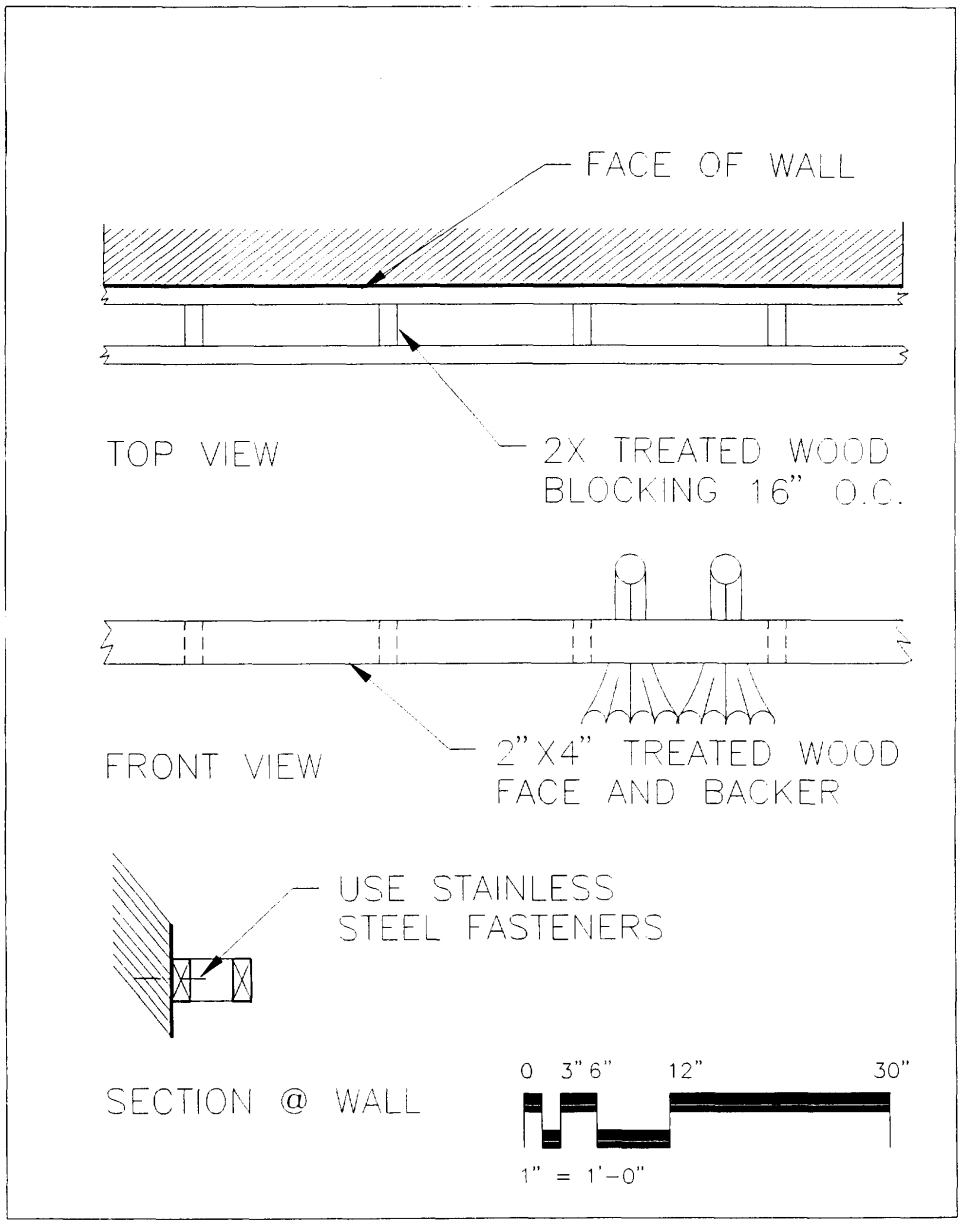


| TITLE: FLIPPER AND GOGGLE RACK | DATE | FACILITY PLATE NO. | SHEET |
|---|---|---|---|
| | JAN 1996 | 171.20 | D2 |

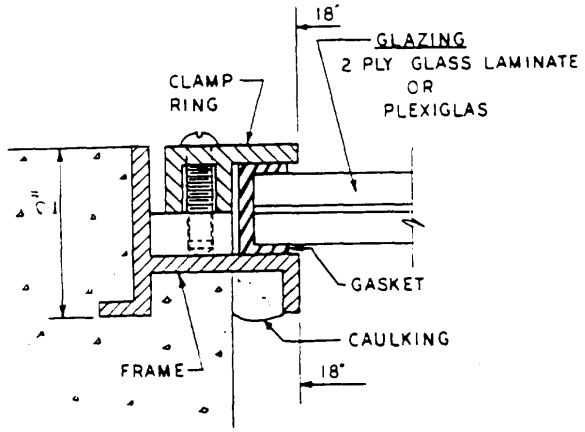


ROUND UNDERWATER OBSERVATION WINDOW

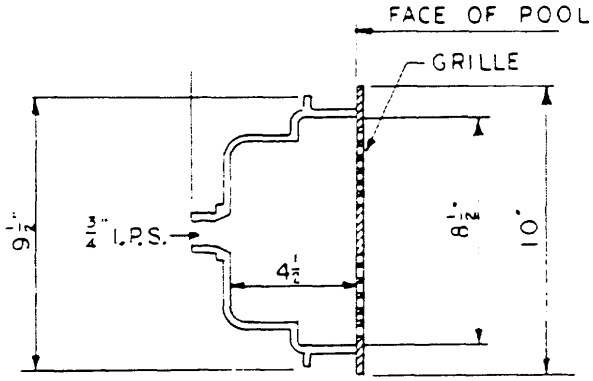


UNDERWATER SPEAKER

DIMENSIONS ARE APPROXIMATE. VERIFY WITH MANUFACTURER

| TITLE: UNDERWATER ACCESSORIES | DATE<br>JUN 1996 | FACILITY PLATE NO.<br>171.20 | SHEET<br>D3 |
|---|---|---|---|

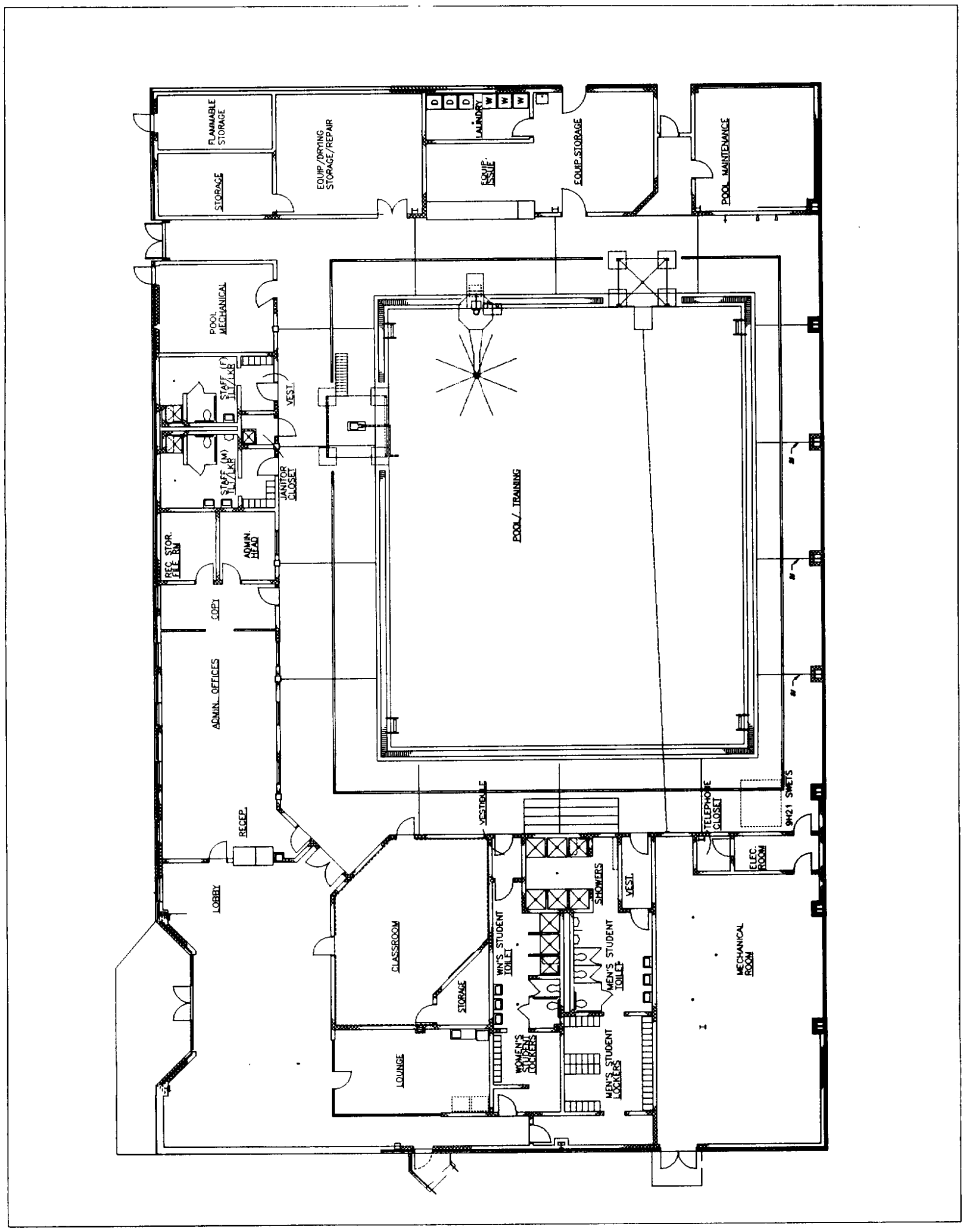


| TITLE: TYPICAL WATER SURVIVAL TRAINING FACILITY | DATE SEP 1996 | FACILITY PLATE NO. 171.20 | SHEET D4 |
|---|---|---|---|

APPENDIX A
WATER SURVIVAL POOL TRAINER

**SEE CCB/CADD LIBRARY/NAVFAC CADD STANDARD DRAWINGS**

# APPENDIX B
## TYPICAL AVIATION SURVIVAL TRAINING DEVICES

PHOTO 1 Universal Ejection Seat Trainer 9E6.....174
PHOTO 2 Universal Ejection Seat Trainer 9E6.....175
PHOTO 3 Decompression Chamber.....176
PHOTO 4 Decompression Chamber - Front Elevation.....177
PHOTO 5 Decompression Chamber - Side Elevation .....178
PHOTO 6 Vacuum for Decompression Chamber.....179
PHOTO 7 Cockpit Dunker Trainer.....180
PHOTO 8 Parachute Hanging Trainer Device.....181
PHOTO 9 Water Survival Pool Area With Training Devices and Clothes Drying Storage Area.....182
PHOTO 10 Hoist Rescue Trainer, Water Survival Pool.....183
PHOTO 11 Storage Area for Aviator Trainer Equipment.....184

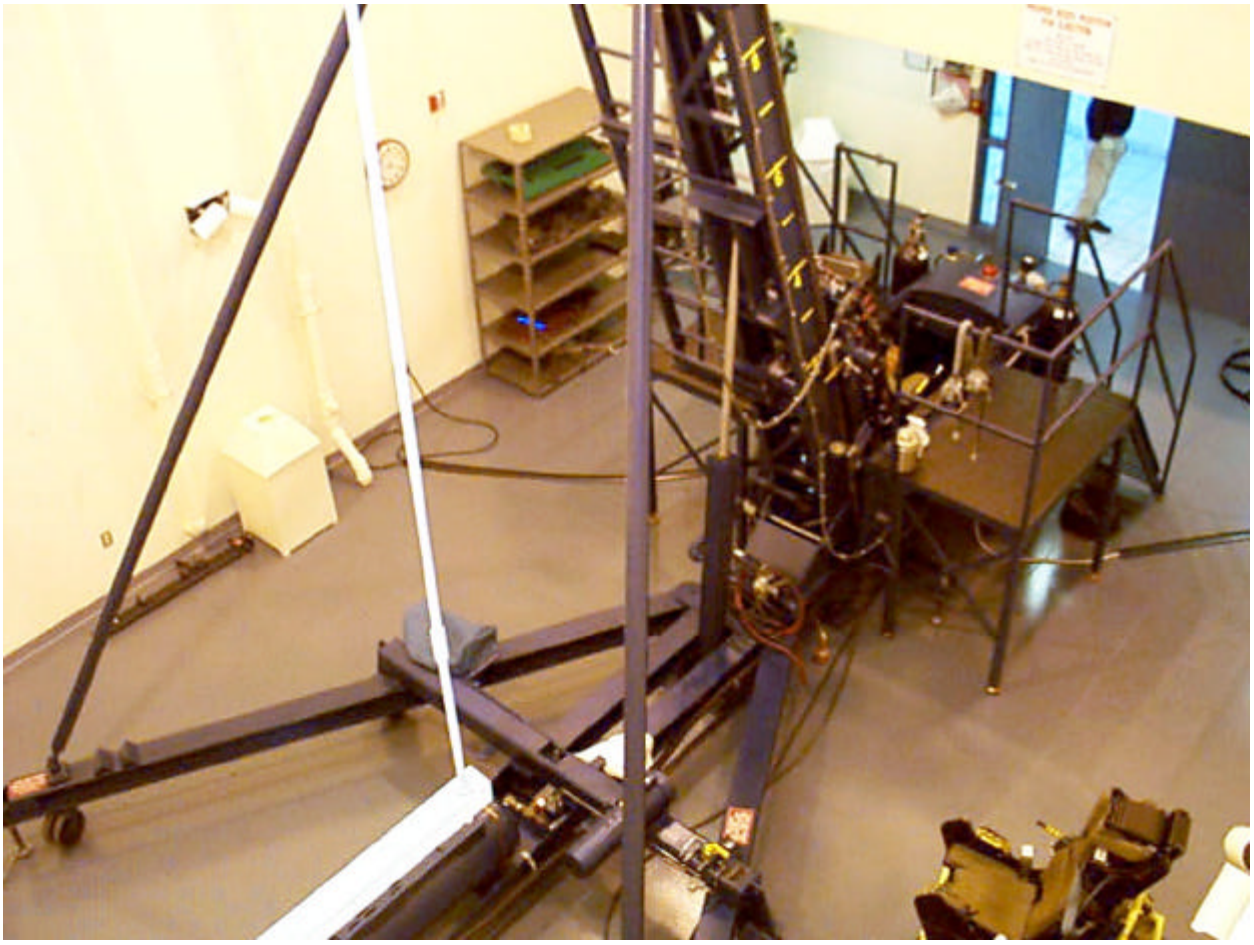

PHOTO 1
Universal Ejection Seat Trainer 9E6

PHOTO 2
Universal Ejection Seat Trainer 9E6

PHOTO 3
Decompression Chamber

PHOTO 4
Decompression Chamber - Front Elevation

PHOTO 5
Decompression Chamber - Side Elevation

PHOTO 6
Vacuum for Decompression Chamber

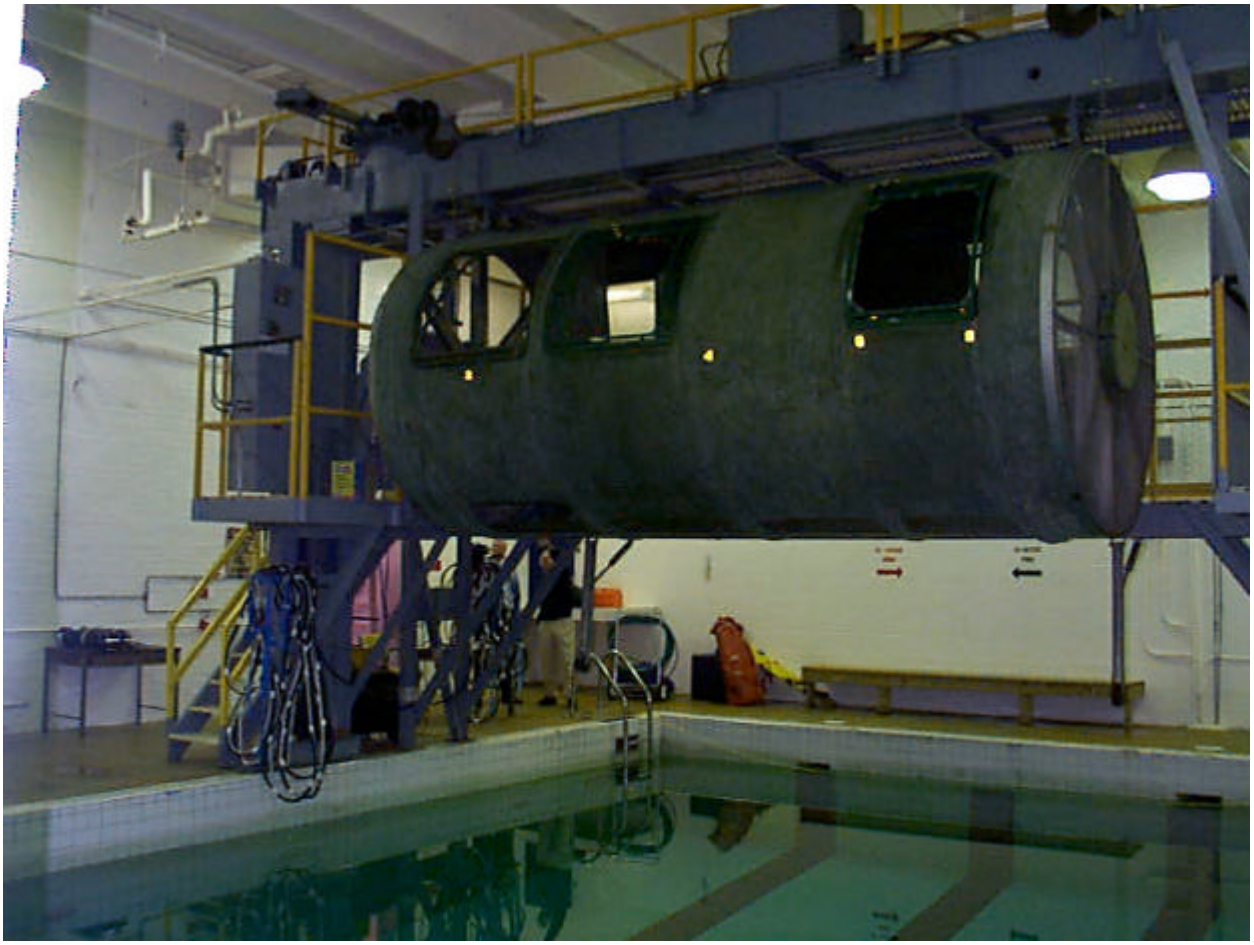

PHOTO 7
Cockpit Dunker Trainer

PHOTO 8
Parachute Hanging Trainer Device

PHOTO 9
Water Survival Pool Area With Training Devices
and Clothes Drying Storage Area

PHOTO 10
Hoist Rescue Trainer, Water Survival Pool

PHOTO 11
Storage Area for Aviator Trainer Equipment

# REFERENCES

NOTE: THE FOLLOWING REFERENCED DOCUMENTS FORM A PART OF THIS HANDBOOK TO THE EXTENT SPECIFIED HEREIN. USERS OF THIS HANDBOOK SHOULD REFER TO THE LATEST REVISIONS OF CITED DOCUMENTS UNLESS OTHERWISE DIRECTED.

FEDERAL/MILITARY SPECIFICATIONS, STANDARDS, BULLETINS, HANDBOOKS, AND NAVFAC GUIDE SPECIFICATIONS:

Unless otherwise indicated, copies are available from the Defense Automated Printing Service STANDARDIZATION DOCUMENT ORDER DESK, Building 4D, 700 Robbins Avenue, Philadelphia, PA 19111-5094.

HANDBOOKS

| | |
|---|---|
| MIL-HDBK-419A | Grounding, Bonding, and Shielding for Electronic Equipments and Facilities (Volume 1 - Basic Theory; Volume 2 - Applications) |
| MIL-HDBK-1001/1 | Basic Architectural Requirements and Design Considerations |
| MIL-HDBK-1002/2 | Loads |
| MIL-HDBK-1004/1 | Electrical Engineering Preliminary Design Considerations |
| MIL-HDBK-1004/4 | Electrical Utilization Systems w/ Change |
| MIL-HDBK-1004/6 | Lightning Protection |
| MIL-HDBK-1004/7 | Wire Communications and Signal Systems |
| MIL-HDBK-1005/8 | Domestic Wastewater Control |
| MIL-HDBK-1005/9 | Industrial and Oily Waste Water Control |
| MIL-HDBK-1008C | Fire Protection for Facilities Engineering, Design, and Construction |
| MIL-HDBK-1012/1 | Electronic Facilities Engineering |
| MIL-HDBK-1012/3 | Telecommunications Premises Distribution Planning, Design, and Estimating |
| MIL-HDBK-1013/1 | Design Guidelines for Physical Security of Fixed Land-based Facilities |
| MIL-HDBK-1034 | Administrative Facilities |
| MIL-HDBK-1195 | Radio Frequency Shielded Enclosures |

GUIDE SPECIFICATIONS

| | |
|---|---|
| NFGS-10440G | Signs |
| NFGS-L14622 | Monorails with Electric Powered Hoists |

| | |
|---|---|
| NFGS-14637H | Cranes, Overhead Electric, Underrunning (Under 50,000 pounds) |

FEDERAL STANDARDS

| | |
|---|---|
| FED STD 795 | Uniform Federal Accessibility Standards |

NAVY MANUALS, DEPARTMENTAL INSTRUCTIONS, P-PUBLICATIONS AND MAINTENANCE OPERATING MANUALS:

Unless otherwise indicated, copies are available from the Defense Automated Printing Service STANDARDIZATION DOCUMENT ORDER DESK, Building 4D, 700 Robbins Avenue, Philadelphia, PA 19111-5094.

P-PUBLICATIONS

| | |
|---|---|
| P-80 | Facility Planning Criteria for Navy and Marine Shore Installations |
| P-355 | Seismic Design for Buildings |
| P-905 | Planting and Establishment of Trees, Shrubs, Ground Covers and Vines |
| P-960 | Installation Design |
| P-970 | Planning in the Noise Environment |

DEPARTMENTAL INSTRUCTIONS

| | |
|---|---|
| NAVFAC 11010.44E | Shore Facilities Planning Manual |
| NAVFAC 11013.39A | Operation and Maintenance Support Information (OMSI) for Facilities Projects |
| OPNAV 5510.1H | Department of the Navy Information and Personnel Security Program Regulation |
| OPNAV 5530.14B | Department of the Navy Physical Security and Loss Prevention |
| OPNAV 11010.36A | Air Installation Compatibility Use Zone Program |

DESIGN MANUALS

| | |
|---|---|
| DM-1.03 | Architectural Acoustics |
| DM-3.01 | Plumbing Systems |
| DM-3.03 | Heating, Ventilating, Air Conditioning, and Dehumidifying Systems |
| DM-3.5 | Compressed Air and Vacuum Systems |
| DM-3.09 | Elevators, Escalators, Dumbwaiters, Access Lifts, and Pneumatic Tube Systems. |

| | |
|---|---|
| DM-3.10 | Noise and Vibration Control Mechanical Equipment (ARMY) |
| DM-14.01 | Interior Design |
| DM-38.01 | Weight Handling Equipment |

OTHER GOVERNMENT DOCUMENTS AND PUBLICATIONS:

Guideline on Electrical Power for ADP Installations, (FIPS PUB 94), September 21, 1983, Springfield, VA 22161

Glazed Panels, Safety Standard for Architectural Glazing Materials, (16 CFR Part 1201), July 6, 1977, U.S. Consumer Product Safety Commission, Washington, DC 20207

| | |
|---|---|
| DOT D6.1 | Manual on Uniform Traffic Control Devices for Streets and Highways |
| NAVY | Navy Telephone Manual |
| OSHA | Occupational Safety and Health Act |
| 29CFR Chapter 12 | Uniform Relocation Assistance and Real Property Acquisition for Federal and Federally Assisted Programs |

DEPARTMENT OF LABOR

| | |
|---|---|
| CFR 1910.23C | Guarding Floor and Wall Openings |
| CFR 1910.141 | Sanitation |

(Copies can be obtained from the Superintendent of Documents, U.S. Government Printing Office, Washington, DC 20402.)

NON-GOVERNMENT PUBLICATIONS

Unless otherwise specified, the issues of the documents which are DOD adopted are those listed in the Department of Defense Index of Specifications and Standards (DODISS).

Architectural Graphic Standards, John Wiley & Sons

(Unless otherwise indicated, copies are available from The AIA Bookstore, 1735 New York Avenue, Washington, DC 20006, ph. 202 626 7475)

Timesaver Standards for Building Types, 2nd Edition, McGraw-Hill Book Company

(Unless otherwise indicated, copies are available from The AIA Bookstore, 1735 New York Avenue, Washington, DC 20006, ph. 202 626 7475)

AMERICAN SOCIETY OF HEATING, REFRIGERATION, AND AIR CONDITIONING ENGINEERS, INC. (ASHRAE)

| | |
|---|---|
| ASHRAE | HVAC Systems and Applications Handbook |

| | |
|---|---|
| ASHRAE Std 62 | Ventilation for Acceptable Indoor Air Quality |

(Unless otherwise indicated, copies are available from American Society of Heating, Refrigerating and Air-Conditioning Engineers, Inc., 1791 Tullie Circle, NE, Atlanta, GA 30329)

AMERICAN NATIONAL STANDARDS INSTITUTE, INC. (ANSI)

| | |
|---|---|
| ANSI C2 | National Electric Safety Code |
| ANSI Z358.1 | American National Standard for Emergency Eyewash and Shower Equipment |
| ASME/ANSI A17.1 | Safety Code for Elevators and Escalators |

(Unless otherwise indicated, copies are available from ANSI, 1430 Broadway, New York, NY 10008.)

NATIONAL FIRE PROTECTION ASSOCIATION (NFPA)

National Fire Protection Association Codes

| | |
|---|---|
| NFPA 13 | Standard for the Installation of Sprinkler Systems |
| NFPA 55 | Standard for the Storage, Use, and Handling of Compressed and Liquefied Gases in Portable Cylinders |
| NFPA 70 | National Electrical Code - 1990 Article 250 (G) & Articles 250 (m) & 280. |
| NFPA 72 | National Fire Alarm Code |
| NFPA 780 | Lightning Protection Code, Appendix I |
| NFPA 99 | Health Care Facilities |
| NFPA 99B | Hypobaric Facilities |
| NFPA 101 | Safety to Life from Fire in Buildings and Structures |
| NFPA 232 | Protection of Records |

(Unless otherwise indicated, copies are available from National Fire Protection Association, Batterymarch Park, Quincy, MA 02269)

INTERNATIONAL CONFERENCE OF BUILDING OFFICIALS (ICBO)

Uniform Building Code

(Unless otherwise indicated, copies are available from International Conference of Building Officials, 5269 South Workman Mill Road, Whittier, CA 89691.)

# GLOSSARY

ACT. Acoustical Ceiling Tile

AST. Aircrew Systems Trainer

ATT. Aircraft Tactics Trainer

BEAP. Base Exterior Architecture Plan

CIG. Computer Image Generation

CNC. Concrete

CPT. Carpet

CT. Ceramic Tile

CTOL. Conventional Takeoff and Landing (simulator)

CTTSS. Contractor Total Training Systems Support which can include operator and maintenance training by a private contractor.

Device Area. This facility space is dedicated to the training device. It is typically referred to as "high bay" area where domes or high excursion training devices, such as those in training pools are used.

DNL. Day-Night Average Sound Level

Excursion Limit. The envelope of movement for trainer devices

EXP. Exposed

EXP&P. Exposed and Painted

HDR. Hardener for Concrete

High Bay. Areas, which are usually device areas, requiring additional ceiling height

"I" Level Maintenance. Intermediate level maintenance is that level of maintenance which is the responsibility of, and is performed by, designated maintenance activities for direct support of using organizations. Its phases normally consist of calibration, repair or replacement of damaged or unserviceable parts, components or assemblies; the emergency manufacture of non-available parts; and the provision of technical assistance to using organizations.

ICW. Interactive Courseware

IFT. Instrument Flight Trainer

LCPO. Lead chief petty officer

LPO. Lead petty officer

MCOT. Aircraft Mission Trainer

Motion Envelope. An imaginary enclosure defined by the excursion limits of moving equipment components

MFT. Mission Flight Trainer

MSDS. Material safety data sheet

NAMT. Trainers which incorporate actual aircraft stock assemblies with mechanical and/or electrical actuation to simulate functions

"O" Level Maintenance. Organizational level maintenance is that level of maintenance which is the responsibility of, and is performed by a using organization on its assigned equipment. Its' phases normally consist of inspecting, servicing, lubricating, adjusting and replacing parts, minor assemblies and subassemblies.

OF/NT. Operational Flight/Navigational Trainer

OF/WST. Operational Flight/Weapons System Trainer

OFT. Operational Flight Trainer

PERFMTL. Perforated Metal

PGWB. Painted Gypsum Wall Board

PT. Position Trainer

PTD. Painted

PTT. Part Task Trainer

QT. Quarry Tile

SAMT. Trainers which are used primarily in teaching troubleshooting and operational theory and typically use interactive multipurpose displays (IMPDs)

SLR. Sealer

TERR. Terrazzo

TEST. Tactical Environment System Trainer

TFR. Trainer Facility Report

TRAINEE. Usually the pilot

TT. Tactics Trainer

TTT. Tactical Team Trainer

VCT. Vinyl Composition Tile

VTOL. Vertical Takeoff and Landing (simulator)

VWC. Vinyl Wall Covering

WST. Weapons Systems Trainer

WST/VS. Weapons System Trainer/Visual System

WTT. Weapons Tactics Trainer

CUSTODIAN
NAVY - YD2

PREPARING ACTIVITY
NAVY - YD2

PROJECT NUMBER
FACR-1183

**STANDARDIZATION DOCUMENT IMPROVEMENT PROPOSAL**

INSTRUCTIONS

1. The preparing activity must complete blocks 1, 2, 3, and 8. In block 1, both the document number and revision letter should be given.

2. The submitter of this form must complete blocks 4, 5, 6, and 7.

3. The preparing activity must provide a reply within 30 days from receipt of the form.

NOTE: This form may not be used to request copies of documents, nor to request waivers, or clarification of requirements on current contracts. Comments submitted on this form do not constitute or imply authorization to waive any portion of the referenced document(s) or to amend contractual requirements.

| **I RECOMMEND A CHANGE:** | 1. DOCUMENT NUMBER<br>MIL-HDBK-1027/4A | 2. DOCUMENT DATE *(YYMMDD)*<br>980309 |
|---|---|---|

3. DOCUMENT TITLE AVIATION TRAINING FACILITIES

4. NATURE OF CHANGE *(identify paragraph number and include proposed rewrite, if possible. Attach extra sheets as needed.)*

5. REASON FOR RECOMMENDATION

6. SUBMITTER

| a. NAME *(Last, First, Middle Initial)* | b. ORGANIZATION | |
|---|---|---|
| c. ADDRESS *(Include Zip Code)* | d. TELEPHONE *(Include Area Code)*<br>(1) Commercial<br>(2) DSN<br>*(If applicable)* | 7. DATE SUBMITTED:<br>*(YYMMDD)* |

8. PREPARING ACTIVITY

| a. NAME COMMANDING OFFICER<br>SOUTHNAVFACENGCOM<br>CODE 0712DB | b. TELEPHONE (*Include Area Code*)<br>(1) Commercial: (803) 820-7321 (2) DSN 583-7321 |
|---|---|
| c. ADDRESS *(Include Zip Code)*<br>2155 EAGLE DRIVE, P.O. BOX 190010<br>NORTH CHARLESTON, SC 29419-9010 | **IF YOU DO NOT RECEIVE A REPLY WITHIN 45 DAYS, CONTACT:**<br>Defense Quality and Standardization Office<br>5203 Leesburg Pike, Suite 1403, Falls Church, VA 22041-3466<br>Telephone (703) 756-2340 DSN 289-2340 |