UFC 4-832-01N
16 January 2004

UNIFIED FACILITIES CRITERIA (UFC)

DESIGN: INDUSTRIAL AND OILY WASTEWATER CONTROL

APPROVED FOR PUBLIC RELEASE; DISTRIBUTION UNLIMITED

UNIFIED FACILITIES CRITERIA (UFC)

DESIGN: INDUSTRIAL AND OILY WASTEWATER CONTROL

Any copyrighted material included in this UFC is identified at its point of use.
Use of the copyrighted material apart from this UFC must have the permission of the copyright holder.

U.S. ARMY CORPS OF ENGINEERS

NAVAL FACILITIES ENGINEERING COMMAND (Preparing Activity)

AIR FORCE CIVIL ENGINEERING SUPPORT AGENCY

Record of Changes (changes indicated by **1**\ ... /**1**/)

Change No.	Date	Location

FOREWORD

The Unified Facilities Criteria (UFC) system is prescribed by MIL-STD 3007 and provides planning, design, construction, sustainment, restoration, and modernization criteria, and applies to the Military Departments, the Defense Agencies, and the DoD Field Activities in accordance with USD(AT&L) Memorandum dated 29 May 2002. UFC will be used for all DoD projects and work for other customers where appropriate.

UFC are living documents and will be periodically reviewed, updated, and made available to users as part of the Services' responsibility for providing technical criteria for military construction. Headquarters, U.S. Army Corps of Engineers (HQUSACE), Naval Facilities Engineering Command (NAVFAC), and Air Force Civil Engineer Support Agency (AFCESA) are responsible for administration of the UFC system. Defense agencies should contact the preparing service for document interpretation and improvements. Technical content of UFC is the responsibility of the cognizant DoD working group. Recommended changes with supporting rationale should be sent to the respective service proponent office by the following electronic form: Criteria Change Request (CCR). The form is also accessible from the Internet sites listed below.

UFC are effective upon issuance and are distributed only in electronic media from the following sources:

- Unified Facilities Criteria (UFC) Index http://65.204.17.188//report/doc_ufc.html.
- USACE TECHINFO Internet site http://www.hnd.usace.army.mil/techinfo/index.htm.
- NAVFAC Engineering Innovation and Criteria Office Internet site http://criteria.navfac.navy.mil.
- Construction Criteria Base (CCB) system maintained by the National Institute of Building Sciences at Internet site http://www.nibs.org/ccb.

Hard copies of UFC printed from electronic media should be checked against the current electronic version prior to use to ensure that they are current.

AUTHORIZED BY:

DONALD L. BASHAM, P.E.
Chief, Engineering and Construction Division
U.S. Army Corps of Engineers

DR. JAMES W WRIGHT, P.E.
Chief Engineer
Naval Facilities Engineering Command

KATHLEEN I. FERGUSON, P.E.
The Deputy Civil Engineer
DCS/Installations & Logistics
Department of the Air Force

Dr. GET W. MOY, P.E.
Director, Installations Requirements and Management
Office of the Deputy Under Secretary of Defense (Installations and Environment)

CONTENTS

Page

CHAPTER 1 INTRODUCTION

Paragraph 1-1 PURPOSE AND SCOPE 1-1
1-2 APPLICABILITY 1-1
1-2.1 General Building Requirements 1-1
1-2.2 Safety 1-1
1-2.3 Fire Protection 1-1
1-2.4 Antiterrorism/Force Protection 1-1
1-3 REFERENCES 1-2

APPENDIX A MIL-HDBK 1005/9A..... A-1

CHAPTER 1

INTRODUCTION

1-1 **PURPOSE AND SCOPE**. This UFC is comprised of two sections. Chapter 1 introduces this UFC and provides a listing of references to other Tri-Service documents closely related to the subject. Appendix A contains the full text copy of the previously released Military Handbook (MIL-HDBK) on this subject. This UFC serves as criteria until such time as the full text UFC is developed from the MIL-HDBK and other sources.

This UFC provides general criteria for the design of industrial and oily wastewater control systems.

Note that this document does not constitute a detailed technical design, maintenance or operations manual, and is issued as a general guide to the considerations associated with design of economical, efficient and environmentally acceptable heating plants.

1-2 **APPLICABILITY**. This UFC applies to all Navy service elements and Navy contractors; Army service elements should use the references cited in paragraph 1-3 below; all other DoD agencies may use either document (s) unless explicitly directed otherwise.

1-2.1 **GENERAL BUILDING REQUIREMENTS**. All DoD facilities must comply with UFC 1-200-01, *Design: General Building Requirements*. If any conflict occurs between this UFC and UFC 1-200-01, the requirements of UFC 1-200-01 take precedence.

1-2.2 **SAFETY**. All DoD facilities must comply with DODINST 6055.1 and applicable Occupational Safety and Health Administration (OSHA) safety and health standards.

NOTE: All **NAVY** projects, must comply with OPNAVINST 5100.23 (series), *Navy Occupational Safety and Health Program Manual*. The most recent publication in this series can be accessed at the NAVFAC Safety web site: www.navfac.navy.mil/safety/pub.htm. If any conflict occurs between this UFC and OPNAVINST 5100.23, the requirements of OPNAVINST 5100.23 take precedence.

1-2.3 **FIRE PROTECTION**. All DoD facilities must comply with UFC 3-600-01, *Design: Fire Protection Engineering for Facilities*. If any conflict occurs between this UFC and UFC 3-600-01, the requirements of UFC 3-600-01 take precedence.

1-2.4 **ANTITERRORISM/FORCE PROTECTION**. All DoD facilities must comply with UFC 4-010-01, *Design: DoD Minimum Antiterrorism Standards for Buildings*. If any conflict occurs between this UFC and UFC 4-010-01, the requirements of UFC 4-010-01 take precedence.

1-3 **REFERENCES**. The following Tri-Service publications have valuable information on the subject of this UFC. When the full text UFC is developed for this subject, applicable portions of these documents will be incorporated into the text. The designer is encouraged to access and review these documents as well as the references cited in Appendix A.

1. US Army Corps of Engineers
Commander
USACE Publication Depot
ATTN: CEIM-IM-PD
2803 52nd Avenue
Hyattsville, MD 20781-1102
(301) 394-0081 fax: 0084

karl.abt@hq02.usace.army.mil
http://www.usace.army.mil/inet/usace-docs/

USACE EI 11C201, Wastewater Collection and Pumping, 01 March 1997
USACE EM 1110-3-173, Sanitary and Industrial Wastewater Pumping - Mobilization/Construction, 09 April 1984
USACE EM 1110-3-174, Sanitary and Industrial Wastewater Pumping – Mobilization/ Construction, 09 April 1984
USACE TM 5-814-1, Sanitary and Industrial Wastewater Collection; Gravity Sewer and Appurtenances, 04 March 1985
USACE TM 5-814-2, Sanitary and Industrial Wastewater Collection – Pumping Stations and Force Mains, 15 March 1985
USACE TL 1110-3-466, Selection & Design of Oil/Water Separators at Army Facilities, 26 August 1994

APPENDIX A

MIL-HDBK 1005/9A
INDUSTRIAL AND OILY WASTEWATER CONTROL

INCH-POUND

MIL-HDBK-1005/9A
31 October 1997

SUPERSEDING
MIL-HDBK-1005/9
30 September 1988

DEPARTMENT OF DEFENSE
HANDBOOK

INDUSTRIAL AND OILY WASTEWATER CONTROL

AMSC N/A AREA FACR

DISTRIBUTION STATEMENT A. Approved for public release; distribution is unlimited.

ABSTRACT

This handbook presents design criteria for use by qualified engineers for design of collection, transport, treatment, and sludge handling facilities for industrial and oily wastewaters from Naval installations. The handbook also presents design criteria for metering instrumentation, controls, and chemical feeding devices for these facilities.

FOREWORD

This handbook has been developed from an evaluation of facilities in the shore establishment, from surveys of the availability of new materials and construction methods, and from selection of the best design practices of the Naval Facilities Engineering Command (NAVFACENGCOM), other Government agencies, and the private sector. This handbook was prepared using, to the maximum extent feasible, national professional society, association, and institute standards. Deviations from this criteria, in the planning, engineering, design, and construction of Naval shore facilities, cannot be made without prior approval of NAVFACENGCOM Code 15C.

Design cannot remain static any more than can the function it serves or the technologies it uses. Accordingly, recommendations for improvement are encouraged and should be furnished to Commander, Naval Facilities Engineering Command, Naval Engineering Command Headquarters, Code 15C, 1510 Gilbert Street, Norfolk, VA 23511-2699; telephone commercial (757)322-4210, facsimile machine (757)322-4416.

DO NOT USE THIS HANDBOOK AS A REFERENCE IN A PROCUREMENT DOCUMENT FOR FACILITIES CONSTRUCTION. USE IT IN THE PURCHASE AND PREPARATION OF FACILITIES PLANNING AND ENGINEERING STUDIES AND DESIGN DOCUMENTS USED FOR THE PROCUREMENT OF FACILITIES CONSTRUCTION (SCOPE, BASIS OF DESIGN, TECHNICAL REQUIREMENTS, PLANS, SPECIFICATIONS, COST ESTIMATES, REQUEST FOR PROPOSALS, AND INVITATION FOR BIDS). DO NOT REFERENCE IT IN MILITARY OR FEDERAL SPECIFICATIONS OR OTHER PROCUREMENT DOCUMENTS.

CIVIL ENGINEERING CRITERIA MANUALS

Criteria Manual	Title	Preparing Activity
DM-5.4	Pavements	PACDIV
DM-5.5	General Provisions and Geometric Designs for Streets, Design for Roads, Walks, and Open Storage Areas	NAVFAC
MIL-HDBK-1005/6	Trackage	NORTHDIV
MIL-HDBK-1005/7	Water Supply Systems	SOUTHDIV
MIL-HDBK-1005/8	Domestic Wastewater Control	NAVFAC
MIL-HDBK-1005/9	Industrial and Oily Wastewater Control	NAVFAC
DM-5.10	Solid Waste Disposal	PACDIV
MIL-HDBK-1005/13	Hazardous Waste Storage Facilities	NAVFAC
DM-5.14	Groundwater Pollution Control	NAVFAC

NOTE: Design manuals, when revised, will be converted to military handbooks.

INDUSTRIAL AND OILY WASTEWATER CONTROL

CONTENTS

			Page
Section 1		INTRODUCTION	
	1.1	Scope	1
	1.2	Cancellation	1
	1.3	Definitions	1
	1.3.1	Pollution	1
	1.3.2	Facilities	2
	1.4	Policy	2
	1.4.1	Guidelines	2
	1.4.2	Standards	2
	1.4.3	Cooperation With Review Agencies	2
	1.4.4	Environmental Impact Statements	2
	1.4.5	Shore Disposal of Ship Sewage	2
	1.4.6	Energy Conservation	2
	1.4.7	Water Conservation	3
	1.5	Overview of the Clean Water Act	3
	1.5.1	Water Quality Based Standards	4
	1.5.2	Technology-Based Standards	5
	1.5.3	National Pollutant Discharge Elimination System (NPDES)	6
	1.5.4	Small Discharge Containment	7
	1.6	Operations and Maintenance (O&M) Manual	8
	1.7	Special Provisions in Seismic Areas	8
	1.8	Design Manual Use	8
	1.8.1	Purpose	8
	1.8.2	Guidelines	8
Section 2		INDUSTRIAL WASTEWATER COLLECTION AND TREATMENT	
	2.1	Objectives	9
	2.2	Industrial Pollutants	9
	2.2.1	Conventional Pollutants	9
	2.2.2	Toxic Pollutants	10
	2.2.3	Effluent Discharge Limits	10
	2.2.3.1	Direct Discharge to Navigable Water	10
	2.2.3.2	Indirect Discharge	10
	2.2.3.3	Pretreatment Regulations	11
	2.2.4	Planning and Design Procedures	12
	2.3	Source Control and Waste Reduction	12
	2.3.1	Source Characterization	12

		Page
2.3.2	Process Changes	12
2.3.3	Source Separation	12
2.3.3.1	Metal Plating Wastes	13
2.3.3.2	Oily Wastes	13
2.3.3.3	Costs	13
2.3.4	Recovery	13
2.3.5	Good Housekeeping	13
2.4	Wastewater Flows and Characteristics	13
2.4.1	Types of Wastewater	13
2.4.2	Flows	13
2.4.2.1	Monitoring	13
2.4.2.2	Peak Flows	16
2.4.3	Flow Characteristics	16
2.4.3.1	Monitoring	16
2.4.3.2	Typical Characteristics	16
2.4.3.3	Discharge Criteria	16
2.4.3.4	Radioactive Wastes	20
2.4.4	Flow and Load Equalization	20
2.4.4.1	Basin Sizing	20
2.4.4.2	Basin Construction	20
2.4.4.3	Mixing Conditions	21
2.4.5	Effect of Industrial Wastes	21
2.4.5.1	Collection Systems	21
2.4.5.2	Treatment Systems	21
2.4.6	Limits on Biological Treatment	21
2.4.6.1	Conventional Pollutants	21
2.4.6.2	Toxic Substances	22
2.4.6.3	Other Pollutants	22
2.4.6.4	Nutrients	23
2.4.6.5	Other	23
2.4.7	Bioassay of Wastewaters	24
2.4.7.1	Standard Bioassay Procedures	24
2.4.7.2	Rapid Bioassay Procedure	25
2.5	Wastewater Collection	25
2.5.1	Gravity and Pressure Systems	25
2.5.1.1	Storm Water	25
2.5.1.2	Uncontaminated Wastes	26
2.5.1.3	Hazardous and Toxic Wastes	26
2.5.2	Gravity Sewers	26
2.5.2.1	Design Flows	26
2.5.2.2	Flow Formula	26
2.5.2.3	Velocity Constraints	26
2.5.2.4	Maintenance of Energy Gradient	26

		Page
2.5.2.5	Pipe Diameter	27
2.5.2.6	Depth	27
2.5.2.7	Layout	27
2.5.2.8	Structures and Appurtenances	27
2.5.2.9	Pipes	27
2.5.2.10	Installation	27
2.5.3	Pumping	27
2.5.3.1	Location	30
2.5.3.2	Capacity	31
2.5.3.3	Pumps	31
2.5.3.4	Force Mains	31
2.5.3.5	Dependability	31
2.5.3.6	Wet Wells	32
2.5.3.7	Dry Wells	33
2.5.3.8	Alarms	33
2.5.3.9	Maintenance Considerations	34
2.5.3.10	Equipment and Appurtenances	34
2.5.3.11	Cold Regions Design	34
2.5.4	Special Requirements for Pier and Wharf Systems	34
2.5.5	Innovative Collection Systems	34
2.5.6	Aircraft and Vehicle Washracks, Maintenance, and Service Areas	34
2.5.6.1	Housekeeping	34
2.5.6.2	Appurtenances	35
2.5.7	Paint Shops	36
2.5.7.1	Paint Stripping	36
2.5.7.2	Paint Booths	36
2.5.8	Fire Training Areas	36
2.5.9	Metal Plating Operations	37
2.5.9.1	Separate Collection Systems	37
2.5.9.2	Volume Reduction	37
2.5.10	Drydocking Facilities	37
2.5.10.1	Collection Systems.	37
2.5.10.2	Treatment System	39
2.6	Wastewater Treatment	39
2.6.1	General Design Considerations	39
2.6.1.1	Effluent Limits	39
2.6.1.2	Treatment Versus Pretreatment	39
2.6.1.3	Receiving Water	40
2.6.1.4	Sanitary Sewer	40
2.6.1.5	Batch Versus Continuous Treatment	40
2.6.1.6	Disposal of Sludges	40
2.6.1.7	Air Pollution Control	42

		Page
2.6.2	Reuse/Recycle	42
2.6.2.1	Cooling Water Recycle	42
2.6.2.2	Reclamation	43
2.6.3	Hazardous and Toxic Substances	44
2.6.4	Pretreatment Process Selection	44
2.6.5	Physical-Chemical Treatment Process Selection	45
2.6.5.1	Neutralization	45
2.6.5.2	Precipitation	53
2.6.5.3	Chemical Oxidation	57
2.6.5.4	Activated Carbon	59
2.6.5.5	Other Treatment Processes and Operations	59
2.6.6	Naval Aviation Depot	59
2.6.6.1	Operations	59
2.6.6.2	Wastewater Characteristics	61
2.6.6.3	Treatment System	61
2.6.7	Naval Air Station	61
2.6.7.1	Operations	61
2.6.7.2	Wastewater Characteristics	61
2.6.7.3	Treatment System	62
2.6.8	Naval Shipyard	62
2.6.8.1	Operations	62
2.6.8.2	Waste Characteristics	62
2.6.8.3	Treatment System	62
2.6.9	Paint Spray and Stripping Shop	62
2.6.9.1	Operations	62
2.6.9.2	Waste Characteristics	62
2.6.9.3	Treatment System	63
2.6.10	Miscellaneous Shops	63
2.6.10.1	Operation	63
2.6.10.2	Waste Characteristics	63
2.6.10.3	Treatment System	63
2.6.11	Facilities Layout	75
2.6.12	Color Coding of Piping Systems	75
2.6.12.1	Federal Safety Red	75
2.6.12.2	Federal Safety Yellow	76
2.6.12.3	Federal Safety Orange	76
2.6.12.4	Federal Safety Green	76
2.6.12.5	Federal Safety Blue	76
2.6.12.6	Other	76
2.7	Guidelines From Actual Experience	76
2.7.1	Post Occupancy Evaluation Reports	76
2.7.2	Design Factors	76
2.7.3	Operational Factors	80

		Page
2.7.4	Equipment Selection	81
2.7.5	Material Selection	81
Section 3	OILY WASTEWATER COLLECTION AND TREATMENT	
3.1	Objectives	84
3.2	Sources	84
3.2.1	Pierside and Barge Collection of Shipboard Oily Waste	84
3.2.2	Aircraft and Vehicle Maintenance Operations	84
3.2.3	Aircraft Washracks and Rinse Areas	85
3.2.4	Tank Farm Operations	85
3.2.5	Fire Training Area	86
3.2.6	Storm Water Runoff.	86
3.2.7	Ship and Barge Deballasting Operations	86
3.2.8	Other Sources	86
3.3	Discharge Criteria	87
3.4	Point Source Control	88
3.4.1	Segregation and Recovery	88
3.4.2	Process Change	88
3.5	Disposal of Oil	88
3.5.1	Reuse/Recovery	88
3.5.2	Incineration	89
3.5.3	Waste Hauler	89
3.5.4	Landfill or Land Disposal	89
3.6	Emergency Containment and Cleanup	89
3.7	Oily Wastewater Characteristics	89
3.7.1	General	89
3.7.2	Characteristics	90
3.7.3	Flows	91
3.7.4	Sampling	91
3.7.5	Analyses	91
3.7.6	Treatability	91
3.8	Collection and Transfer	92
3.8.1	Ship Oily Wastewater Generation	92
3.8.1.1	Ships	92
3.8.1.2	Ship Oily Wastewater Flows	94
3.8.2	Shoreside Collection Systems	103
3.8.2.1	General	103
3.8.2.2	Collection System Layout	103
3.8.2.3	Pipe Materials	104
3.8.2.4	Special Considerations	105
3.8.3	Pressurized Pier Collection System	105
3.8.4	Gravity Flow Collection System	106

		Page
3.8.5	Pump Stations	113
3.9	Oily Wastewater Treatment	114
3.9.1	General	114
3.9.2	Treatment Requirements.	115
3.9.2.1	Discharge to Publicly Owned Treatment Works	115
3.9.2.2	Discharge to Navigable Water	119
3.9.2.3	Redundancy	119
3.9.3	Sulfide Control	120
3.9.4	Dissolved Metals Removal	124
3.9.5	Emulsified Oil Treatment	125
3.10	Design Criteria for Oil-Water Separators and Appurtenances	129
3.10.1	General	129
3.10.1.1	Processes	129
3.10.1.2	Equipment	130
3.10.1.3	Equalization (Surge Tank)	130
3.10.1.4	Grit Removal	130
3.10.2	Load Equalization Tank (LET)	130
3.10.2.1	Basis of Sizing	131
3.10.2.2	Layout	131
3.10.2.3	Sloping Bottom	136
3.10.2.4	Sludge Scraping Mechanism	136
3.10.2.5	Oil Skimmer	136
3.10.2.6	Sample Taps	138
3.10.2.7	Water Supply	138
3.10.2.8	Corrosion Protection	138
3.10.3	API Separator	139
3.10.4	Induced Gravity Separator	139
3.10.4.1	Parallel Plate Separator	142
3.10.5	Skimming Dam	144
3.10.5.1	Diversion Pond	150
3.10.6	Dissolved Air Flotation (DAF) and Induced Air Flotation (IAF)	150
3.10.6.1	Pressurization Method	150
3.10.6.2	Design Parameters	151
3.10.6.3	Chemical Conditioning	152
3.10.7	Polishing Treatment Alternatives	152
3.10.7.1	Multimedia Filtration	159
3.10.7.2	Coalescing Filtration	160
3.10.7.3	Activated Carbon Adsorption	160
3.10.8	Sludge Dewatering and Disposal	163
3.10.8.1	Sludge Drying Beds	163
3.10.8.2	Drying Lagoons	166

Page
3.10.8.3 Mechanical Dewatering and Disposal 167
3.10.8.4 Sludge Disposal 170
3.10.9 Oil Reclamation 172
3.10.9.1 Demulsification 172
3.10.9.2 Demulsifier Selection and Application . . . 173
3.10.10 Pumps, Valves, and Piping 174
3.10.10.1 Pumps 174
3.10.10.2 Valves 175
3.10.10.3 Piping 175
3.10.11 Instrumentation 177

Section 4 METERING, INSTRUMENTATION AND CONTROL, AND CHEMICAL FEEDING
4.1 Scope 178
4.2 Related Criteria 178
4.3 Use of Criteria 178
4.3.1 Special Cases 178
4.3.2 Letters in Tables 178
4.4 Policies 179
4.4.1 Primary Measurement 179
4.4.2 Instrumentation 179
4.4.3 Controls 179
4.4.4 Standardization 179
4.4.5 Equipment Accuracy 180
4.4.6 Equipment Ranges 180
4.4.7 New Products 180
4.5 Information Required 180
4.6 Wastewater Treatment Systems 180
4.6.1 Primary Measuring Devices 180
4.6.1.1 Location and Purpose 180
4.6.1.2 Use Limitations 181
4.6.1.3 Discrete Versus Analog Devices 181
4.6.1.4 Special Considerations 181
4.6.1.5 Ship Sewage 181
4.6.2 Instrumentation 181
4.6.2.1 Use Limitations 182
4.6.2.2 Transmission 182
4.6.2.3 Remote Indication 182
4.6.3 Controls 189
4.6.3.1 Manual 189
4.6.3.2 Automatic 189
4.6.3.3 Design Considerations 189
4.7 Chemical Handling and Feeding 189
4.7.1 Introduction 189

Page
4.7.2 Chemical Handling and Feeding 189
4.7.2.1 Handling 189
4.7.2.2 Storage 197
4.7.2.3 On-Site Generation and Feeding Equipment. . 197
4.7.2.4 Chemical Feeders 200
4.7.2.5 Safety Precautions 204
4.7.2.6 Chemical Feeder Capacity and Standby Requirements. 204
4.7.3 Sampling 205
4.7.3.1 Sampling Techniques 205
4.7.3.2 Sample Volume and Preservation 206
4.7.4 Analytical Methods 206
4.7.4.1 Routine Testing During Plant Operation . . 206

FIGURES

Figure 1 Planning and Design Steps for Industrial Waste Treatment Facility 14
2 Wastewater Diversion Chamber 38
3 Solubility of Metal Hydroxides and Sulfides as a Function of pH 56
4 NADEP Wastewater Treatment Flow Schematic 64
5 Process Schematics for Chrome Reduction, Cyanide Oxidation, and Phenol Oxidation 69
6 Process Schematic for Batch and Continuous Flow Metal Precipitation 72
7 Layout for Industrial Waste Treatment Facility. . 78
8 Ship-to-Shore Oily Waste Hose Connection. . . . 100
9 Pier Receiving Hose Riser Assembly 107
10 Viscosity-Temperature Relationship for Marine Diesel Fuel 111
11 Oily Waste Collection Pipeline - Nomenclature . .112
12 Treatment System for Discharge to POTW or Navigable Water 121
13 In-line Chemical Addition System 126
14 Solubilities of Metal Hydroxides as a Function of pH 128
15 Load Equalization Tank (LET) 134
16 Tube Type Oil Skimmer Installation 140
17 Floating Weir Type Skimmer Installation 141
18 API Separator 145
19 Induced Gravity Separators. 147
20 Skimming Dam Details. 153

Page
21 Diversion Pond Details. 155
22 Schematic of Dissolved Air Flotation Oil-Water Separator 158
23 Mixed Media Filtration. 162
24 Schematic of Coalescing Filter. 165
25 Two-Vessel Granular Carbon Adsorption System . .168
26 Oil Emulsion Treatment Schematic 176

TABLES

Table 1 Selected Categorical Pretreatment Standards . . . 11
2 Characteristics of Industrial Wastes. 17
3 Threshold Concentrations for Heavy Metal Inhibition of Biological Treatment Processes. . . 23
4 Sewer Structures. 28
5 Sewer Pipe Selection Guide. 29
6 Process Selection Guide for Pretreatment of Industrial Wastewater 46
7 Physical-Chemical Treatment of Industrial Wastes. 48
8 Estimated Maximum 30-Day Average for Lime and Sulfide Precipitation 58
9 Granular Carbon Adsorption Treatment Applications 60
10 Color Coding Criteria for Piping Systems at Wastewater Facilities. 79
11 Ship Bilge Pump Data 95
12 Estimated Daily Oily Waste Flows for Facility Design. 98
13 Guidelines for Oily Wastewater Treatment 116
14 API Separator Design Criteria 142
15 Parallel Plate Oil-Water Separator Design Data . 148
16 Guidelines for Oily Waste Treatment Monitoring .177
17 Types of Measuring Devices Applicable to Wastewater Treatment Systems 183
18 Metering, Instrumentation, and Control Requirements for Industrial Wastewater Treatment Systems. 187
19 Function of Chemicals for Industrial and Oily Wastewater Treatment. 190
20 Data on Chemicals for Wastewater Treatment. . . .191
21 Chemical Storage Space Criteria 198
22 Chemical Storage Type Criteria 199
23 Types of Chemical Feeders for Wastewater Treatment Systems. 201

Page

24 Recommendations for Sample Collection and Preservation According to Measurement. 207
25 Analytical Methods 210

BIBLIOGRAPHY 212

REFERENCES 213

GLOSSARY 221

Section 1: INTRODUCTION

1.1 Scope. This handbook contains design criteria for the collection, transport, and treatment of industrial and oily wastewater discharges from Naval facilities. Particular details covered include:

a) Design procedures and guidelines;

b) Industrial and oily wastewater characterization, collection, and treatment;

c) Effluent disposal;

d) Metering, instrumentation and control of wastewater processes;

e) Chemical handling and feeding.

Emphasis has been placed on processes and equipment which have had wide application and for which there is significant design and operation experience. Systems particularly applicable to the size and type of facilities operated by the Navy are emphasized.

This handbook does not cover systems for the control of exhaust emissions from internal combustion engines, boilers, or air scrubbers; systems for the control of wastes from nuclear reactors; or systems for control, transport, and disposal of hazardous wastes.

1.2 Cancellation. This handbook, MIL-HDBK-1005/9A, cancels and supersedes MIL-HDBK-1005/9, dated 30 September 1988.

1.3 Definitions

1.3.1 Pollution. Pollution is the condition resulting from discharge of chemical, physical, or biological agents which so alters or harms the natural environment that it creates an adverse effect on human health or comfort, fish and wildlife, other aquatic resources, plant life, or structures and equipment to the extent of producing economic loss, impairing recreational opportunity, or marring natural beauty.

1.3.2 Facilities. Facilities means the aircraft, vessels, buildings, installations, structures, equipment, and other vehicles and property owned by the Department of the Navy or constructed or manufactured for lease to the Navy.

1.4 Policy. The basic policy of the Navy regarding pollution control is that the Navy will cooperate with other concerned agencies at the local, State, and Federal level. This policy is detailed in the Office of the Chief of Naval Operations Instruction (OPNAVINST) 5090.1, Environmental and Natural Resources Program Manual. Also refer to Environmental Quality in MIL-HDBK-1190, Facility Planning and Design Guide.

1.4.1 Guidelines. Refer to OPNAVINST 5090.1. Also refer to applicable United States Environmental Protection Agency (EPA) and State guidelines.

1.4.2 Standards. Consult the regional office of the EPA and appropriate State and local regulatory agencies for information on applicable regional or local standards.

1.4.3 Cooperation With Review Agencies. Submit project plans to EPA and local and State regulatory agencies for information and comment.

1.4.4 Environmental Impact Statements. These statements are normally not required for improvement projects for pollution abatement. Guidelines on when to submit statements are given in OPNAVINST 5090.1.

1.4.5 Shore Disposal of Ship Sewage. Refer to Naval Ship (NAVSHIP) Engineering Center Directive, Ship-to-Shore Interface for Sewage Disposal System.

1.4.6 Energy Conservation. Recent definition of national tasks emphasizes the urgency of intensifying efforts to incorporate energy conservation features in facilities design. The following documents contain direction and guidance for standard and accepted design practice relating to basic energy conserving features. These features are to receive fullest consideration during the design process.

a) MIL-HDBK-1190

b) Chief of Naval Education and Training (CNET) 4100.4, Energy Technology Application Program

c) MIL-HDBK-1003/3, Heating, Ventilating, Air Conditioning, and Dehumidifying Systems

In addition to full utilization of the preceding references, innovative design approaches are necessary to meet energy conservation goals.

1.4.7 Water Conservation. It is the policy of the Navy to employ water conservation measures to an extent that is feasible and economical, particularly in arid regions. Such methods as reuse of wastewater on agricultural crops, application of wet sludge to cropland, and reuse of wastewater for industrial purposes should receive full consideration in facilities planning and design.

1.5 Overview of the Clean Water Act. The Clean Water Act is a major Federal law that addresses the release of pollutants to surface waters of the United States, such as lakes, streams, estuaries, oceans, and bays. Last amended in 1987, the Clean Water Act provides legislation for many water pollution issues. The amendments of the Clean Water Act make up six titles. The first title states the objective of the Act and establishes programs to improve the water quality and remove pollutants from the Great Lakes and the Chesapeake Bay. Second, the Act provides funding for construction of publicly owned treatment works. Perhaps most important are the third and fourth titles which address enforcement of the Act through standards and permits. The fifth title addresses judicial review and procedures for workers who report a violation of the Act. Finally, the sixth title gives the EPA the authority to provide states with grants to establish pollution control funds and also decide how they will use these funds. Federal facilities are subject to the provisions of the Clean Water Act and must make appropriate changes to comply.

Enforcement of the Clean Water Act through standards and permits is an essential way to ensure that the objectives of the Act are met. The Clean Water Act imposes effluent limitations upon direct industrial dischargers based on national technology-based standards and water quality based standards. Technology-based standards establish minimum treatment levels for direct industrial dischargers without regarding water quality of the public waterways receiving the waste. These standards are based on treatment technologies that have been developed and are capable of being utilized by an entire industry. Water quality standards are applied to ensure that the water quality of specific bodies of water is protected and that the body of water can support its intended use.

Water quality standards provide the basis for establishing discharge limits in the National Pollutant Discharge Elimination System (NPDES). The NPDES is the regulatory mechanism for the Clean Water Act. The NPDES requires anyone discharging pollutants from a point source into waters of the United States to obtain a permit. Permits obtained through the NPDES are legally enforceable.

1.5.1 Water Quality Based Standards. U.S. waters have adopted water quality based standards to restore and maintain the chemical, physical, and biological integrity of the waters so that the propagation of fish and wildlife can be protected. Water quality standards consist of two essential components: designated uses and specific water quality criteria. A designated use describes the value of the water body and how it is used. Under Section 303 of the Clean Water Act, states are required to establish designated uses for the water bodies in their jurisdiction. The designated uses can be as specific as is needed for the individual water body through use of subcategories or naming individual species of aquatic life that require protection. Water bodies, which are affected by naturally occurring pollutants or have low flow water levels can have designated uses which are not attainable. In these cases, the water quality is at a lower level than is necessary to protect the water body’s designated use. The naturally occurring pollutants make protection through permits and regulations difficult. Instead, it is more realistic to modify the designated use to one that is more easily attainable.

The second component of water quality standards is water quality criteria. Under Section 303 of the Clean Water Act, states are also required to adopt water quality criteria. Water quality criteria describe the water quality that will support a water body's designated use. This criteria can be expressed in numeric or narrative form based on the latest scientific findings regarding the effects of pollutants on aquatic life and human health.

Other important parts of water quality standards are the anti-degradation policies. These policies are formed to conserve, maintain, and protect existing uses of water bodies. When water quality of a water body is above and beyond that required to protect the designated use, the anti-degradation policy works to maintain the present condition of the water body. Anti-degradation policies also protect outstanding national resource waters, such as waters in national and state parks and wildlife refuges.

Water quality standards must be reviewed and updated at least once every 3 years. Revisions or new standards may be necessary under several circumstances: new scientific and technical information becoming available, improvements being made in the water quality, changes being made to the regulations, or environmental changes occurring in the ecological structure of the water body or its surroundings. Water quality standards play an important role in protecting the waters being affected by the pollutants.

1.5.2 Technology-Based Standards. Technology-based standards establish minimum amounts of pollutants allowed to be discharged from industrial facilities. When determining the limits, these standards do not take into consideration the water bodies being affected. Industrial facilities that discharge wastewater directly into public waterways instead of into publicly owned treatment facilities are subject to technology-based standards. The standards are established and applied evenly throughout facilities within an industry. Each industry may have its own unique standards based upon the pollutants that are discharged and the best treatment technology available for the entire industry. However, subcategories within industries

may be developed to take into account differences in raw materials used, manufacturing processes, age of the facilities, types of wastewater, and type of product produced.

Limitations that are established focus on conventional, nonconventional, and toxic pollutants. Conventional pollutants are biochemical oxygen demand (BOD), total suspended solids (TSS), pH, oil and grease, and fecal coliform. Nonconventional pollutants are pollutants that are not, by definition, conventional or toxic. There are over 400 toxic pollutants. Similar to the water quality standards, the Clean Water Act requires revision to the limitations. However, these revisions should be performed on an annual basis to reflect current and improved technologies.

Every 2 years an “Effluent Guidelines Plan” is published in the Federal Register identifying industrial sources that discharge nonconventional and toxic pollutants and do not yet have guidelines. Effluent guidelines (incorporating technology-based standards) are established based on the amount of effluent limitation reduction possible for toxic and nonconventional pollutants by the best available technology (BAT) economically achievable method. Best conventional pollutant control technology is the technical standard for conventional pollutants. When the EPA has not established technology-based limitations, best professional judgment (BPJ) is used to determine effluent guidelines. Industries built after the publication of regulations are considered “new sources” and are subject to more stringent effluent standards. As long as compliance is met, industries have the freedom to choose among different manufacturing processes and equipment.

1.5.3 National Pollutant Discharge Elimination System (NPDES). NPDES is the regulatory mechanism for the Clean Water Act. NPDES requires anyone discharging pollutants from a point source (pollutants discharged through confined and discrete carrying devices) into waters of the United States to have a permit. Some of the regulations that are controlled through permits include the disposal of sewage sludge, dredge and fill activities into navigable water and wetlands, discharge of pollutants into ocean waters, and discharge of storm water. NPDES permits can subject a direct discharge industrial facility or a publicly owned treatment work to many terms and conditions.

To ensure compliance with their NPDES permits, publicly owned treatment works enforce pretreatment standards which industrial users must follow before discharging into sewers.

In addition to effluent limitations, the permit can require monitoring and reporting requirements. Monitoring requirements include descriptions of how the sampling of the effluent should be conducted, how frequently the samples should be taken, and the type of monitoring required. The results of monitoring (including any noncompliance) are recorded on a Discharge Monitoring Report and are reported regularly to the EPA and State authorities. Water quality standards are also enforced through the NPDES. If any standard is not sufficient to protect the waters, then more stringent limitations are included in the permit.

NPDES permits are administered by either the U.S. EPA or a state that has been delegated by the EPA to be a permitting authority. Permits are valid for 5 years and only under certain circumstances may be modified, revoked, reissued, transferred, or terminated. Failure to disclose facts when applying for a permit, failure to comply, or the closing of a facility will justify the termination of a permit. Modifications can be made to the permit when there are changes to the facility, when new information is available, or when regulations are changed. Permits can be issued only after opportunity has been given for a public hearing.

1.5.4 Small Discharge Containment. Title 33, Section 154.530 of the Code of Federal Regulations (CFR) requires small discharge containment for facilities that transfer oil or hazardous waste. The facility must have fixed catchments, curbing, berm, or other fixed means to contain discharges from hose connections and loading arm areas. The containment must have the capacity of at least: (1) two barrels if it serves one or more hoses of 6-inch diameter pipe or smaller; (2) three barrels if it serves one or more hoses with diameter more than 6 inches but less than 12 inches; (3) four barrels if it serves one or more hoses of 12-inch diameter or larger.

1.6 Operations and Maintenance (O&M) Manual. The preparation and furnishing of an 0&M manual should be included in the scope of work of architect-engineering (A-E) contracts for the design of industrial waste treatment plants, oily waste treatment plants, and associated pumping and wastewater transfer systems.

1.7 Special Provisions in Seismic Areas. Refer to NAVFAC P-355, Seismic Design for Buildings, Section 10, Mechanical and Electrical Elements; Section 11, Structures Other than Buildings; and Section 12, Utility Systems, for recommended provisions in seismic areas.

1.8 Design Manual Use

1.8.1 Purpose. This handbook is a general guide for designing industrial and oily wastewater collection and treatment facilities not covered in other military handbooks or Navy design manuals. The design criteria presented and referenced herein will assist the engineer in the design of naval facilities.

1.8.2 Guidelines. This handbook presents extensive criteria for the design and operation of pollution control systems. It also includes guidelines developed from past field experiences. These guidelines are the result of design deficiencies, operational problems, poor equipment selection, and poor materials specification. These guidelines are presented in the Section 2, paragraph 2.7.

Section 2: INDUSTRIAL WASTEWATER COLLECTION AND TREATMENT

2.1 Objectives. Industrial waste should be collected in a manner that avoids unsafe conditions to personnel, equipment, and facilities. Industrial wastes should either be pretreated sufficiently to be accommodated in a domestic wastewater collection and treatment system, or provided with a separate collection and treatment system. Refer to NAVFACINST 4862.5, Industrial Facilities Acquisition Projects Which Involve Complex Processes or Hazardous/Toxic Materials, before proceeding on an industrial wastewater control project. Bench scale or pilot plant treatability studies to evaluate the effectiveness of the proposed physical, chemical, or biological unit processes may be needed for design of industrial waste treatment facilities. These studies should be conducted on the waste stream, if available, or on an equivalent waste stream at another Naval facility. As a minimum, jar tests should be conducted prior to chemical process design to determine the reactor design criteria, process control and operating strategy, sludge production, and sludge characteristics. Using new membrane technologies, consideration must be made for brine generation that can be nonhazardous and discharged directly to a publicly owned treatment works (POTW). Pilot and bench scale studies should simulate the complete series of proposed unit process treatment steps using the same wastewater sample. This will identify any adverse effects of upstream treatment processes on subsequent treatment steps.

2.2 Industrial Pollutants. Industrial wastewaters contain pollutants that can be divided into two types (conventional or toxic) depending on their degree of impact on the environment.

2.2.1 Conventional Pollutants. Conventional pollutants are BOD, TSS, pH, fecal coliform, oil, and grease.

2.2.2 Toxic Pollutants. Sixty-five specific compounds and families of compounds were identified as toxic by the EPA (Title 40 CFR, Part 403). The EPA must promulgate effluent limitations, pretreatment standards, and new source performance standards for 42 major industrial categories (Title 40 CFR, Part 403). Examples of toxic substances typically found in wastewater from Navy installations are heavy metals, cyanides, aqueous film-forming foam (AFFF), phenols and halogenated phenols, paint stripping agents, solvents, surfactants, and degreasers.

a) Contact local and state regulatory agencies for updated list of priority pollutants.

b) If characteristics of industrial wastewater are unknown, obtain complete organic and inorganic analysis by an EPA certified laboratory. Refer to Section 4 for sample collection and analytical procedures.

2.2.3 Effluent Discharge Limits. Effluent discharge limits for industrial wastes are established by the EPA. The limits are specific to the industrial waste category (such as metal finishing or electroplating), the type of industrial facility (new or existing), and the point of discharge. Effluent discharge alternatives are presented below.

2.2.3.1 Direct Discharge to Navigable Water. Direct discharge to a receiving water body would be regulated under the NPDES permit. Direct discharge will usually require an extensive treatment facility that is capable of producing low effluent pollutant levels for conventional pollutants and toxic pollutants. A Naval treatment facility that discharges directly to navigable water is designated herein as a Navy-owned treatment works (NOTW).

2.2.3.2 Indirect Discharge. Indirect discharge to a receiving water body occurs by way of a sewerage collection system and a POTW. Indirect discharge does not require an NPDES permit for the industrial wastewater. The discharged wastewater characteristics, however, must satisfy the POTW’s sewer use ordinance and pretreatment standards. A Navy-owned treatment facility that uses indirect discharge is designated herein as a pretreatment facility.

a) Indirect discharge levels for conventional pollutants will usually be higher and easier to satisfy than levels for direct discharge.

b) Indirect discharge levels for toxic substances may be greater than or equal to those for direct discharge depending on the POTW sewer ordinance.

Contact local officials for sewer use ordinances and EPA categorical discharge standards to determine applicable industrial category and discharge limits. These limits will establish the industrial treatment or pretreatment requirements prior to direct or indirect discharge, respectively.

2.2.3.3 Pretreatment Regulations. Pretreatment standards for concentrations of pollutants that may be discharged to a POTW by industrial users are established by the EPA (Title 40 CFR, Part 403.6). Existing categorized pretreatment standards for the electroplating (40 CFR Part 413) and metal machinery category (40 CFR Part 433) are summarized in Table 1.

Table 1
Selected Categorical Pretreatment Standards

Pollutant	Electroplating[1]		Metal Finishing[2]		Metal Prod. & Machinery[3]	
	Max. Day (ppm)	4-Day Avg (ppm)	Max. Day (ppm)	Mo. Avg (ppm)	Max. Day (ppm)	Mo. Avg (ppm)
Aluminum	-	-	-	-	1.4	1.0
Cadmium	1.2	0.7	0.69	0.26	0.7	0.3
Chromium	7.0	4.0	2.77	1.71	0.3	0.2
Copper	4.5	2.7	3.38	2.07	1.3	0.6
Cyanide	1.9	1.0	1.2	0.65	0.03	0.02
Iron	-	-	-	-	2.4	1.3
Lead	0.6	0.4	0.69	0.43	-	-
Nickel	4.1	2.6	3.98	2.38	1.1	0.5
Silver	1.2	0.7	0.43	0.24	-	-
Zinc	10.5	6.8	2.61	1.48	0.8	0.4
Oil & Grease	-	-	52	26	73	36

[1]40 CFR Part 413
[2]40 CFR Part 433
[3]Federal Register Proposed Rule (60 FR 28209), May 30, 1995

2.2.4 Planning and Design Procedures. See Figure 1 for an illustration of stepwise procedures for planning and design of an industrial waste treatment project. Refer to NAVFACINST 4862.5 for additional guidance.

2.3 Source Control and Waste Reduction. Investigations should be undertaken to determine the characteristics of wastes, their sources, and potential means for reducing waste quantities prior to proceeding on any industrial waste collection and treatment project.

2.3.1 Source Characterization. Identify wastewater sources using typical industrial waste survey techniques, sewer plans, process piping diagrams, and dye tracer methods. Develop complete and updated wastewater flow schematics and current and projected production rates.

2.3.2 Process Changes. Evaluate the potential for reducing waste volume or strength through process changes such as: changing cleanup operations from wet to dry methods; arranging plating operations for countercurrent rinsing or solution recovery; using wastewater from one process as a source of water for another process (when the second process does not have a high quality requirement); and recycling some wastewaters.

2.3.3 Source Separation. Separate uncontaminated flows, such as storm water inlets, roof drains, building subdrains, and uncontaminated cooling water from contaminated process flow to minimize the volume requiring treatment. Consider combining separate waste flows that are compatible for co-treatment, such as neutralization by combining acid and alkaline flows.

Separate process wastewaters containing pollutants whose individual treatment methods are not compatible or create hazardous conditions. Examples of wastewater to be separated are precipitation treatment of copper and lead (incompatible since optimum pH of precipitation of each metal is not equal) and acid reduction of hexavalent chrome in the presence of cyanide (hazardous as it produces toxic hydrogen cyanide gas).

2.3.3.1 Metal Plating Wastes. Provide for isolation and separate collection system for chrome and phenol containing wastewaters, for cyanide containing wastewaters, and for mixed acid and alkaline-content wastewaters.

2.3.3.2 Oily Wastes. Used oils and solvents should be segregated at their source (if possible). Do not mix oily waste with aqueous waste streams containing metals and phenols.

2.3.3.3 Costs. The additional cost of source isolation and separate collection systems is offset by reduced treatment process requirements, complexity, and cost and reduction in facility operational hazards.

2.3.4 Recovery. Consider the feasibility of recovering materials, such as semiprecious and precious metals, and chrome, from a metal plating waste stream for subsequent reuse by using electrolytic recovery units (ERUs).

2.3.5 Good Housekeeping. Investigate current process operating practices to determine if good housekeeping practices are employed, or if changes can be made to reduce wasted materials or use of excess water.

2.4 Wastewater Flows and Characteristics

2.4.1 Types of Wastewater. Primary sources of industrial wastes at naval facilities are shipyards, air stations, and aircraft rework facilities. Primary sources of wastewater from these facilities are plating operations, painting and stripping operations, graving dock operations, degreasing operations, firefighting schools, equipment operation and maintenance, and miscellaneous processes.

2.4.2 Flows

2.4.2.1 Monitoring. Each industrial waste should be surveyed and its flow should be established. Average conditions, as well as variations, should be identified. Flow rates should be correlated with process production rates to allow extrapolation to full load conditions.

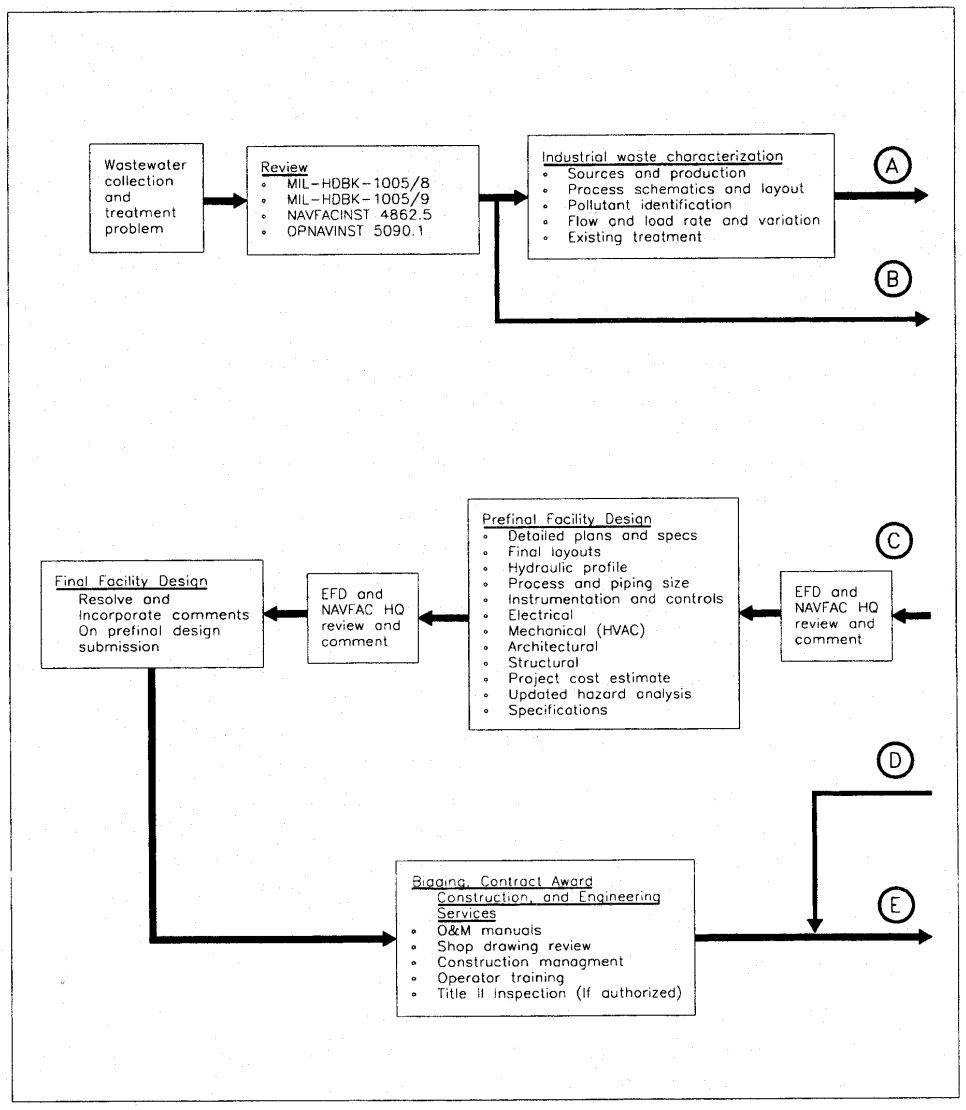

Figure 1
Planning and Design Steps for Industrial Waste Treatment Facility

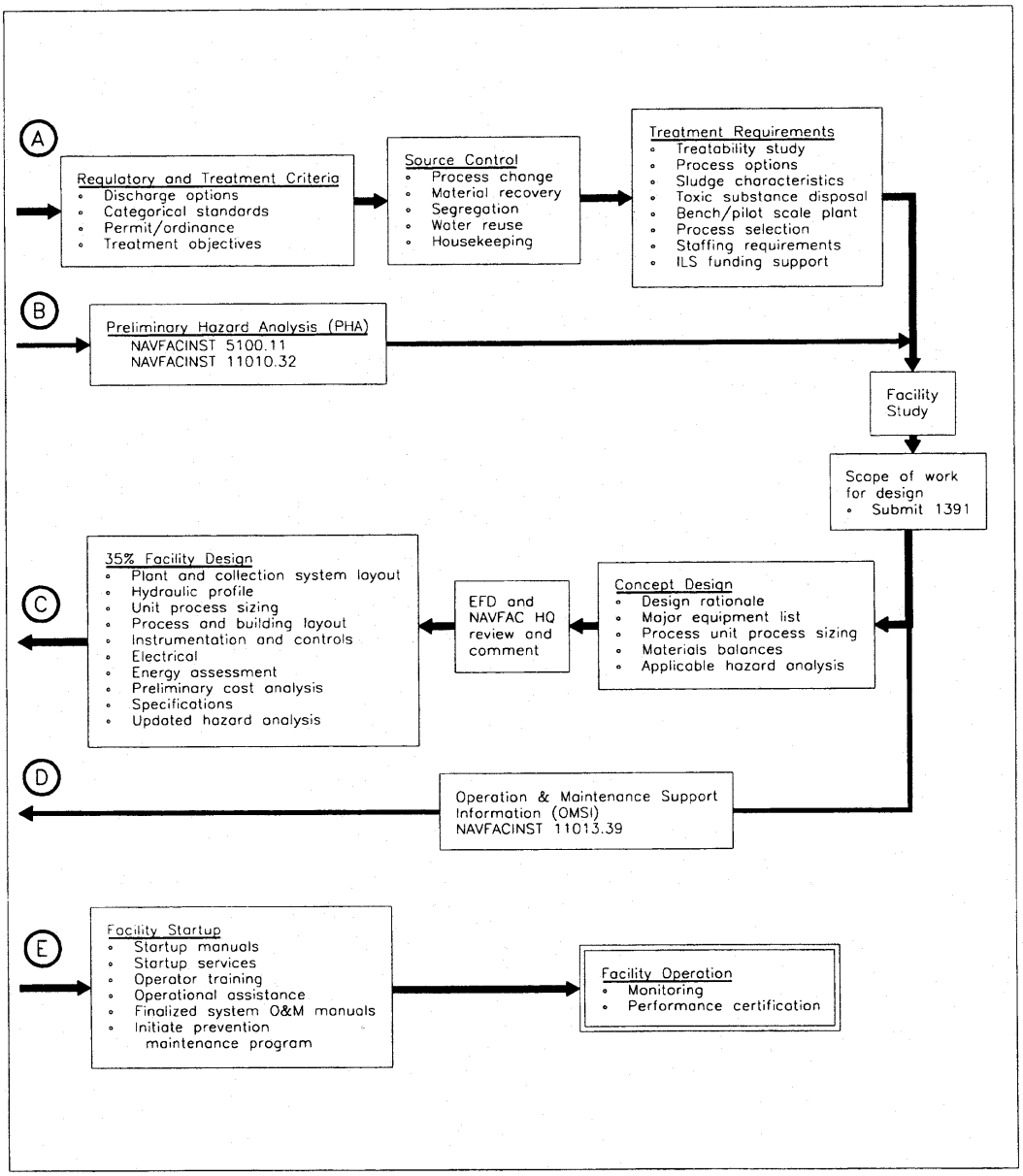

Figure 1 (Continued)
Planning and Design Steps for Industrial Waste Treatment Facility

2.4.2.2 Peak Flows. Peak flows will normally be higher during a specific 8-hour shift during the day (or during a specific day at single shift shops). The peak flow shift should be utilized as the basis for sizing treatment facilities.

2.4.3 Flow Characteristics

2.4.3.1 Monitoring. Determine industrial wastewater characteristics for design from a survey of the actual wastes involved or from knowledge of waste at similar facilities. Refer to the Environmental Protection Agency's (EPA) PB 259146, Handbook for Monitoring Industrial Wastewater for sampling and gaging techniques. Use of waste parameters from similar facilities is practical where monitoring of actual wastes may be difficult or costly; however, monitoring major flow contributions at a specific facility is the preferred method. Ensure that waste monitoring and characterization programs are adequate for full development of design criteria.

2.4.3.2 Typical Characteristics. Characteristics of discharges from some industries commonly associated with Navy facilities are presented in Table 2. These characteristics are only for preliminary engineering analysis. Characteristics of wastes from other industrial processes at Navy facilities may be found in the technical literature. Daily and process-related variations in wastewater characteristics should be identified and related to production operations to facilitate development of control strategies.

2.4.3.3 Discharge Criteria. Identify effluent criteria applicable to discharge from proposed industrial waste treatment plant for either NPDES permit or local pretreatment requirements or recycling to another process. Refer to paragraph 2.2.3.

Metal finishing and battery manufacturing (motor pool) are the only categorical industrial waste types listed in Table 2 that have final pretreatment and direct discharge limits established by EPA pretreatment standards. Refer to Title 40 CFR, Part 403, for metal finishing regulations and Title 40 CFR, Part 403, for battery wastes. None of the other listed waste types have established categorical standards. Consult local, state, and Federal regulatory agencies to determine applicable discharge standards for these waste types.

Table 2
Characteristics of Industrial Wastes

SOURCE	TYPE	TYPICAL WASTE QUANTITY	TYPICAL WASTE CONSTITUENTS AND CHARACTERISTICS		
				Liquor Concentration (%)	
			Constituent	Batch	Continuous
Aircraft Rework Facility	Metal pickling	Batch, 400 gal/ton [1.51 L/kg]	H_2SO_4	0.5 to 2	4 to 7
		Continuous, 300 gal/ton [1.14 L/kg]	$FeSO_4$	15 to 22	14 to 16
			Plating Process	Bath Concentration (%)	
	Metal plating	Dragout 0.4 to 4 gal/1,000 ft^2 [0.02 to 0.16 L/m^2]. Rinse, 100 to 400 gal/1,000 ft^2 [4.07 to 16.3 L/m^2]. Dumping, total quantity of bath (not commonly practiced).		Metal	Cyanide
			Nickel	8.2	
			Chrome	20.7	
			Copper-CN/acid	1.2	2.8
			Cadmium	2.3	5.7
			Zinc	3.4	4.9
			Tin/lead	5.3	
	Paint stripping operation	--	Oil and grease Hexavalent chrome Chromates Phenols Ferrocyanide		
	Paint spray shops	--	Paint sludge		
	Machine shops	--	Oils, grease, solvents, degreasers, emulsifying agents		
			Waste Characteristics	Concentration (mg/L) Range	Typical
Naval Air Stations	Aircraft surface cleaning and treating operations	Peak flow 60 gpm (227.1 L/min) per washrack.	Chemical oxygen demand(COD)	5,000 to 80,000	10,000
			Biochemical oxygen demand(BOD)	500 to 1,500	1,000
			Nitrate(as N)	10 to 60	20
			Phosphate(as PO_4)	20 to 300	100
			Surfactants(MBAS)	200 to 2,000	750
			Oil and grease	300 to 13,000	2,000
			Free oil and grease	100 to 7,000	1,000
			Emulsified oil and grease	200 to 6,000	1,000
			Suspended solids (TSS)	100 to 2,000	1,000
			Volatile suspended solids(VSS)	50 to 1,000	500
			Nonvolatile suspended solids(NVSS)	50 to 1,000	500
			Dissolved solids	2,000 to 5,000	5,000
			Volatile dissolved solids	1,000 to 5,000	3,000
			Nonvolatile dissolved solids	1,000 to 7,000	2,000
			Chromium	0.00 to 0.11	0.05

Table 2 (Continued)
Characteristics of Industrial Waste

SOURCE	TYPE	TYPICAL WASTE QUANTITY	TYPICAL WASTE CONSTITUENTS AND CHARACTERISTICS		
			Zinc	0.00 to 0.23	0.10
			Iron	0.03 to 0.06	0.05
			pH (units)	6.0 to 10.6	8.0
	Vehicle maintenance operations	--	Oil, grease, dirt particles, corrosion removal, and inhibiting compounds.		
Naval Motor Pools	Battery overhaul	--	Waste acid solution.		
Water Treatment Plants	Refer to MIL-HDBK-1005/7		Refer to MIL-HDBK-1005/7		
			Characteristics	Amount	
Submarine Wastes	Internal manifold system for discharge to shore sewage collection system	Typical characteristics given are monthly average output for single submarine	Tri-sodium phosphate	10 lb (4.5 kg)	
			Hydrazine	9 gal (34.1 L)	
			EDTA	44 lb (20.0 kg)	
			Nonionic detergent	4 gal (15.1 L)	
			Hydrochloric acid, sulfuric acid	5 gal (18.9 L)	
			Freon	10 gal (37.9 L)	
			Naphtha and acetone	5 gal (18.9)	
			Dry cleaning fluid	1 gal (3.8 L)	
			QXL detergent	18 gal (68.1 L)	
			Film developer	18 gal (68.1 L)	
			Detergent ultrasonic cleaner	15 gal (56.8 L)	
			Standard Navy laundry detergent	250 lb (113.4 kg)	
			Starch	100 lb (45.4 kg)	
			Bleach	125 lb (56.7 kg)	
			Arlac soap builder	200 lb (90.7 kg)	
			Sour	50 lb (22.7 kg)	
			General purpose water with nontoxic detergent	40 gal (151.4 L)	
Photographic Lab Wastes			Silver and mercury compounds, chromates, acids		
Paint Shops	Stripping and spray operations		Same as for aircraft rework facility		
Miscellaneous Shops	Miscellaneous		Cleaning and rinsing solutions (organics and inorganics), oil and grease, acid and alkalis, solvents, and degreasers		
Ship's Bilge	Bilge water		Characteristics	Range	
			Conductivity	3.410 to 64,000 mho	
			Specific gravity	0.9956 to 1.0233	
			Oxidation-reduction potential	139 to 288 mV	
			pH	6.23 to 7.90 units	

Table 2 (Continued)
Characteristics of Industrial Wastes

SOURCE	TYPE	TYPICAL WASTE QUANTITY	TYPICAL WASTE CONSTITUENTS AND CHARACTERISTICS	
Ship's Bilge	Bilge Water		Characteristics	Range
			VSS	1.5 to 1,506 mg/L
			Settable solids	<0.1 to 0.4 mg/L
			TSS	3.3 to 1,521 mg/L
			COD	1,337 to 2,709 mg/L
			MBAS	0.1 to 77.0 mg/L
			Phenols	0.001 to 0.409 mg/L
			Oil and Grease	3.6 to 14,475 mg/L
			Metals:	
			Aluminum	<0.2 to 2.0 mg/L
			Cadmium	<0.01 to 0.05 mg/L
			Chromium	<0.01 to 0.07 mg/L
			Copper	<0.01 to 2.2 mg/L
			Iron	<0.01 to 7.5 mg/L
			Lead	<0.01 to 0.53 mg/L
			Mercury	<0.0001 to 0.0277 mg/L
			Nickel	<0.01 to 0.04 mg/L
			Silver	<0.01 to 0.01 mg/L
			Zinc	<0.32 to 12.0 mg/L
Fire Training Areas	Fire training	300 gpm (18.9 L/s)	[1]Characteristics	Range
			pH	4.6 to 7.9 units
			COD	350,000 to 500,000 mg/L
			TOC	96,000 to 130,000 mg/L
			[2]BOD_u	300,000 to 411,000 mg/L
			BOD (as percent of BOD_u)	45 to 65
			AFFF is highly toxic to microorganisms. Limit concentration in discharge to biological treatment facilities to ≤250 mg/L.	

[1]Characteristics based on use of AFFF. Range values presented for Department of Defense (DOD). BOD_u and BOD are for AFFF concentrate. The wastewater characteristics will depend on the AFFF content of the fire hose stream. Fire hose streams contain 3 to 6 percent AFFF depending on the proportioning equipment.
[2]Ultimate BOD.

2.4.3.4 Radioactive Wastes. Wastes that have radioactivity are not covered in this handbook.

2.4.4 Flow and Load Equalization. Certain processes have short duration, and high flow and loading rates that can adversely impact the collection and treatment systems. At-the-source equalization tanks may be advantageous to minimize these hydraulic and pollutant load surges. Equalization should be evaluated on a large scale for compatible wastes received at a treatment facility, or on a smaller scale for specific process line-waste discharges.

2.4.4.1 Basin Sizing. Equalization basin volume may be controlled by either flow variations or load variations of the influent. The method of sizing should be selected based on the equalization objective (flow or load).

a) Flow Equalization. If curve of inflow rate variations is available, apply mass diagram technique to determine required storage volume for desired outflow rate. In absence of flow rate curve, determine required storage volume by statistical methods and as outlined in Statistical Design of Equalization Basins, the American Society of Civil Engineers (ASCE) Journal of the Environmental Engineering Division.

b) Load Equalization. Determine the effect of required volume for flow equalization of pollutant loads. Use the method presented in Water and Sewage Works Journal, Developing a Methodology for Design of Equalization Basins, Ouano, 1977. If adequate power is not provided for complete mixing in the basin, size the basin on non-ideal flow pattern described by Ouano (1977). Consider the effects of variable and constant volume basin on equalization performance.

2.4.4.2 Basin Construction. Use steel or concrete tanks with suitable liners to prevent ground water contamination. Earth embankment lagoons are not allowed unless permitted by Resource Conservation and Recovery Act (RCRA). Provide protective liner compatible with wastewater characteristics. Consider frequency of basin use and solids deposition and clean-out when evaluating the need for liners.

2.4.4.3 Mixing Conditions. Provide sufficient aeration or mixing conditions to maintain 1 mg/L of dissolved oxygen in tank contents.

Some equalized wastes may exert no oxygen demand but will require mixing to maintain solids in suspension. Provide circulation velocity of at least 1.0 fps at locations over floor of basin. Consult manufacturers as to circulation capacity of their aeration or mixing equipment for particular basin configuration. Provide for removal of deposited solids from basin, either by drainage and cleaning during off-peak hours or by cleaning without draining. For further information on aeration equipment and installation, refer to Section 3, paragraph 3.10.6.

2.4.5 Effect of Industrial Wastes

2.4.5.1 Collection Systems. The characteristics of industrial process wastewaters must be carefully evaluated so that damage or blockage of the collection system or safety hazards to workmen do not result. Waste acids and hydrogen sulfide can attack concrete and metal conduits. Flammable and explosive materials should be restricted from the sewer system as they may cause explosive conditions. Refer to Water Environment Federation (WEF), Manual of Practice (MOP) No. 3, Regulation of Sewer Use.

2.4.5.2 Treatment Systems. Structures and personnel at treatment facilities are subject to the same hazards noted for collection systems in paragraph 2.4.5.1. In addition, certain industrial wastes can severely inhibit biological treatment performance and overload other unit processes. Evaluations of wastewater characteristics must be closely coupled with proposed treatment processes to ensure that treatment facilities and process performance are protected. Refer to paragraph 2.6.4 for a discussion of treatability studies and industrial pretreatment requirements.

2.4.6 Limits on Biological Treatment

2.4.6.1 Conventional Pollutants. When toxic substances are absent, use loading criteria for conventional pollutants presented in MIL-HDBK-1005/8, Domestic Wastewater Control.

2.4.6.2 Toxic Substances. Toxic substances, such as heavy metals and certain organic compounds, present in some industrial wastes must be controlled to avoid upset or pass-through of biological treatment systems.

a) The levels of heavy metals that can usually be tolerated by biological treatment systems as both a continuous load and as a shock load are listed on Table 3. These levels should be used only for influent characterization to biological treatment at NOTW and pretreatment facilities. The NPDES permit establishes allowable effluent metal limits for direct discharge to navigable water. Allowable levels for indirect discharge are established by the POTW's sewer use ordinance and applicable pretreatment standards.

b) Some organic priority pollutants are also removed by conventional biological treatment systems. Removal mechanisms are biodegradation, volatilization (stripping), and adsorption. Other organic priority pollutants are not removed to any significant or reliable degree and pass through the treatment facility. The degree, methods, and costs of removal of the priority pollutants by conventional treatment processes have been determined by the EPA (refer to EPA 600/2-82-001 a-e, Treatability Manual, Vols. I-V). These treatability data should be used for guidance only. Actual removal performance depends on the operating characteristics (sludge age, mixed liquor suspended solids (MLSS)) of the treatment facility, the method of oxygenation, and the amount and nature of other compounds present in the wastewater.

Bench or pilot scale treatability studies should determine removal performance. Refer to Industrial Water Pollution Control, by Eckenfelder and Ford (1988), for the procedure for conducting treatability studies.

2.4.6.3 Other Pollutants. Some industrial wastes from Navy installations may not contain any listed priority pollutants but may still be toxic due to the presence of other compounds. These wastes should be evaluated using bioassay procedures to negotiate and establish pretreatment levels for discharge to POTW systems (refer to paragraph 2.4.7).

Table 3
Threshold Concentrations for Heavy Metal Inhibition of Biological Treatment Processes[1]

Metal	Concentration[2] (mg/L) Continuous Loading	Shock Loading
Cadmium	1	10
Chromium (hexavalent)	2	2
Copper	1	1.5
Iron	35	100
Lead	1	
Manganese	1	
Mercury	0.002	0.5
Nickel	1	2.5
Silver	0.03	0.25
Zinc	1 to 5	10
Cobalt	<1	
Cyanide	1	1 to 5
Arsenic	0.7	

[1]Satisfy local pretreatment requirements for indirect discharge to most POTW.
[2]The specific level can be variable depending on biological acclimation, pH, sludge age, and degree of metal complexation.

2.4.6.4 Nutrients. Certain minimum amounts of nutrients are required for efficient biological treatment. Normal proportions needed for active microbiological growth are typically about 1 pound (0.45 kg) of phosphorous (as P) and 5 pounds (2.25 kg) of nitrogen (as N) for each 100 pounds (45 kg) of BOD removed (requirements are somewhat lower for lightly loaded systems). Mixing industrial wastes with domestic sewage often avoids the need for supplemental nutrients since sewage contains excess amounts. However, nutrient levels must be evaluated for both separate and combined industrial waste treatment systems.

2.4.6.5 Other. Other wastewater characteristics (such as pH, dissolved solids, and nontoxic industrial organic chemicals) can inhibit biological treatment performance. The identification and allowable concentration of these characteristics can best be determined from treatment of similar wastes and from review of

technical literature. If adequate data on treatability of these wastewaters are not available, conduct pilot or bench scale treatability tests.

2.4.7 Bioassay of Wastewaters. Effluent limitations are based in part on limitations for individual chemicals or generic pollutant parameters: chemical oxygen demand (COD), BOD, or total organic carbon (TOC). Comprehensive physiochemical characterization of an effluent does not directly indicate any possible adverse effects on the ecosystem of the receiving stream. The collective effects of physical, chemical, and biological properties of the effluent are exhibited in the observed toxicity as measured by the bioassay procedure. Industrial process wastewater from naval installations may contain toxic compounds that exhibit none of the generic pollutant parameters or cannot be disclosed for security reasons. The monitoring of these effluents by bioassay techniques may be required by regulatory agencies.

2.4.7.1 Standard Bioassay Procedures. A bioassay measures the concentration of pollutant at which a designated percentage of selected test organisms exhibits an observable adverse effect. The percentage is usually 50 percent, and the adverse effect is usually death or immobility. Concentrations (percent by volume) are expressed as LC5O for median lethal concentration and EC5O for median effective concentration.

a) Test Organisms. Effluent tests should be conducted with a sensitive species that is indigenous to the receiving water. The test organisms do not have to be taken from the receiving water. Refer to EPA 600/4-90-027F, Acute Toxicity – Freshwater and Marine Organisms, for a complete list of acceptable test organisms and temperatures.

b) Methodology. Refer to EPA 600/4-90-027F, for a complete description of required test equipment, laboratory and test procedures, sampling and analytical procedures, procedures for data gathering and reporting, and methods for data reduction and analysis to determine LC50 or EC50.

Regulatory bioassay requirements and LC50 or EC50 are usually based on 48- or 96-hour tests using fish or invertebrates (for example minnows or Daphnia, respectively).

These require extensive equipment, time, and test procedures, and do not provide a rapid assessment of effluent toxicity.

2.4.7.2 Rapid Bioassay Procedure (RBP). The use of RBP should be considered by naval installations in lieu of standard procedures. RBP is a useful tool in effluent monitoring since inexpensive yet reliable toxicity data can be obtained quickly. The EPA as an equivalent method has not approved RBP. Check with a State regulatory agency for approval of RBP prior to developing a test program.

A substantial database of toxicity of pure compounds, and of raw and treated industrial effluents has been developed using RBP (refer to Use of Rapid Bioassay Procedure for Assessment of Industrial Wastewater Treatment Effectiveness, presented at the 38th Purdue Industrial Waste Conference, May 1983). The RBP results have shown good reproducibility and correlation with results of the long-term standard procedure. The RBP is best conducted using one of the proprietary methods and equipment available from chemical instrumentation and equipment manufacturers (for example, the Beckman Microtox™ system, Beckman Instruments, Inc.).

2.5 Wastewater Collection

2.5.1 Gravity and Pressure Systems. Primary considerations in collecting industrial wastes are waste segregation and material selection. Protect pipes, pumps, and appurtenances coming in contact with the wastewater from damage that can be caused by solvents, corrosion, temperature, and pH characteristics of the wastes. Double-wall pipe with leak detection may be required in some application where potentials for soil contamination exist. Collection system modifications or pretreatment steps should be considered for industrial wastes with high solids or sludge content or for wastes that may react to produce solids and sludge deposits. Address the release and formation of toxic or explosive gases in the system design. The following limitations on discharge to industrial waste sewers should be observed.

2.5.1.1 Storm Water. Storm water should not be carried in industrial waste sewers. Provide separate industrial and storm water collection systems.

2.5.1.2 Uncontaminated Wastes. Segregate uncontaminated cooling waters and similar discharges from municipal and commercial establishments from polluted wastes and discharged to storm sewers or natural watercourses. Check with the local Engineering Field Division (EFD) or Engineering Field Activity (EFA) to determine if a discharge permit is required for such uncontaminated waters.

2.5.1.3 Hazardous and Toxic Wastes. Exclude or pretreat wastes that can create a fire or explosion hazard, endanger lives, impair hydraulic capacity, cause corrosion, or carry toxic elements in sufficient quantities to impair downstream treatment processes. Refer to WEF MOP No. 3.

2.5.2 Gravity Sewers. The design for gravity sewers is as follows.

2.5.2.1 Design Flows. Design sewers for peak flow, except design main interceptor to treatment facility for 125 percent of peak flow.

2.5.2.2 Flow Formula. Use the Manning formula (refer to WEF MOP No. FD-5, Gravity Sanitary Sewer Design and Construction) to design sewers to flow full, without surcharge, under peak flow (equivalent to design for flow at 0.8 depth under peak flow with friction factor constant). Use friction factor “n” of 0.013 for most smooth wall pipes; for corrugated wall pipes, use “n” of 0.025.

2.5.2.3 Velocity Constraints. Design pipe slopes to insure a velocity of at least 2.5 feet per second (fps) (0.76 meters per second [m/s]) when pipe is flowing full at peak flow. Velocity should not exceed 10 fps (3.05 m/s) for any flow in design range. Velocities as low as 2.0 fps (0.6 m/s) flowing fully are permitted where appreciable cost benefits can be realized.

2.5.2.4 Maintenance of Energy Gradient. Design to maintain the energy gradient when the diameter of the sewer changes. Set 0.8 depth point of each pipe at the same elevation to approximate this requirement.

2.5.2.5 Pipe Diameter. No sewers in the collection system (including laterals, interceptors, trunks, and mains) should be less than 8 inches (203 mm) in diameter. Other building service connections should be at least 6 inches (152 mm) in diameter.

2.5.2.6 Depth. Place sewers sufficiently deep to receive wastewater from basements and to prevent freezing. Depths greater than 15 feet (4.6 m) are usually uneconomical.

2.5.2.7 Layout. Do not lay trunk lines under buildings. Consider maintenance in the system layout.

2.5.2.8 Structures and Appurtenances. See Table 4 for applications and details of sewer structures.

2.5.2.9 Pipes. Guidelines for selection of sewer pipe material are given in Table 5. Requirements for pipe are given in NFGS-02530, Sanitary Sewerage, and in Tables 4 and 5.

2.5.2.10 Installation. Installation requirements are given in NFGS-02530 or in Table 5.

a) Use WEF MOP FD-5 for criteria pertaining to trenching, foundations, laying, pipe cover, and loads.

b) For design criteria in cold regions, refer to Department of Army Corps of Engineers TM 5-852, Arctic and Subarctic Construction.

c) Design sewer lines located aboveground on structural supports in high wind areas to withstand expected wind velocities (refer to MIL-HDBK-1002 series, Structural Engineering).

2.5.3 Pumping. Use pumping only where a gravity system cannot serve hydraulically or where cost analysis shows a significant saving. Incorporate the following criteria for industrial wastewater systems. Oily wastewater pumping is discussed in Section 3.

Table 4
Sewer Structures

Structure	Type	Where to Use	Details and Special Considerations
Manhole	Regular	Terminally on all lines; at all junctions and changes of direction; at changes in invert elevation or slope. Otherwise, according to spacing shown below: Pipe Size (in.(mm)) — Max. spacing (ft(m)) ≤18(450) — 400(120) 18-48(450-1200) — 500(150) ≥48(1200) — 600(180)	Refer to NFGS-02530. Lower invert through manhole a distance equal to expected loss of head in manhole, plus 0.8 times any change in sewer size. For junction manholes, check which upstream invert is critical in determining outlet invert. Raise top of manhole above possible flooding level.
	Drop	When difference between inlet and outlet inverts exceeds 2 ft (0.6 m)	Refer to NFGS-02530 For difference less than 2 ft (0.6 m), increase upstream sewer slope to eliminate drop.
Siphons	Inverted	For carrying sewers under obstructions or waterways.	Maintain velocity of 3 fps (0.9 m/s). Use not less than two barrels with minimum pipe size of 6 in. (150 mm). Provide for convenient flushing and maintenance. Use WPCF MOP FD-5 for hydraulic design.
Interceptor Sewers	--	Where discharge of existing sewers must be brought to a new concentration point.	Take special care against infiltration due to depth or proximity of surface water.
Traps and Inceptors	Grease and Oil	On outlets from subsistence buildings, garages, mechanical shop, wash pits, and other points where grease or oil can enter system.	Displacement velocity 0.05 fps (0.015 m/s). Grease removal—in absence of other data use 300 to 400 mg/L. Provide for storage of one week's grease production (one day if continuous removal is provided). Length = twice depth

Table 5
Sewer Pipe Selection Guide

Pipe Material	Remarks
Vitrified clay (VC) (gravity)	Use for domestic sewage and industrial wastewaters. VC pipe is especially resistant to acid, alkali, hydrogen sulfide (septic sewage), erosion, and scour.
Ductile iron steel (gravity)	Use for domestic sewage where stale or septic conditions are not anticipated. Do not use in corrosive soils.
Concrete (gravity)	Primarily used for large diameter trunk and interceptor sewers. Do not use in corrosive soils.
Polyvinyl chloride (PVC) (building services and gravity)	PVC may be used for normal domestic sewage and industrial wastewaters. Good for use in corrosive soil conditions. Special care should be given to trench loadings and pipe bedding.
Acrylonitrile-butadiene-styrene (ABS)solid wall (gravity)	ABS may be used for normal domestic sewage and industrial wastewater. Cautions similar to PVC pipe should be exercised. ABS pipe is subject to more deflection in buried or exposed conditions than PVC.
Acrylonitrile-butadiene-styrene (ABS)composite (gravity)	This pipe is also known as truss pipe. An ABS thermoplastic which has been extruded into a truss with inner and outer web-connected pipewalls. The voids are filled with lightweight concrete. ABS may be used for collector lines for corrosive domestic sewage and industrial wastewaters. This pipe is also known as truss pipe.

Table 5 (Continued)
Sewer Pipe Selection Guide

Pipe Material	Remarks
Cast iron soil (building services only)	Use for building service connections carrying normal domestic sewage.
Cast ductile iron (gravity or pressure)	Primarily used for pressure sewers, yard piping within treatment plant areas, submerged outfalls, exposed locations, and portions of gravity lines subjected to high velocities (10 fps [3.05 m/s]). Additional applications include high external loads, railroad crossings, major highway crossings, and so forth. Special linings, coatings, wrappings, encasements, and so forth, are required for corrosive wastes or soil conditions. Gasket material should be suitable for sewage or waste being handled. Avoid cement lining for sludge and domestic sewage receiving less than secondary treatment.
Polyvinyl chloride (PVC) (pressure)	Use for pressure force mains and inverted siphons. Special care should be given to trench loadings and beddings.
Concrete (pressure)	Use for pressure force mains and inverted siphons that are not subjected to corrosive wastes or soil conditions.

Notes: 1. For additional information, refer to the following and their included references:
NFGS-02630, Storm Drainage.
NFGS-02530.
WEF MOP FD-5.
2. Requirements for pipe joints and guidance for selection of jointing material are given in NFGS-02530.

2.5.3.1 Location. Locate pump stations as far as possible from inhabited facilities, subject to the restriction that they be accessible by an all-weather road.

2.5.3.2 Capacity. Provide a total pumping capacity equal to the maximum expected flow with at least one of the largest pumps out of service. Install a minimum of two pumps in any station.

In small stations with a maximum inflow of 500 gallons per minute (gpm) or less, normally provide only two pumps, each with maximum capacity. An exception to this practice would be when this station is the only one pumping directly to a treatment plant. For larger stations, select pump number and capacities so that rates-of-inflow may be matched as nearly as possible. The inflow may be matched by varying sizes of pumps, selecting multiple speed pumps, or by variable speed pumping. Variable speed pumping may completely match inflow and may reduce the necessary wet-well storage volume. Variable speed pumps are the most desirable types to use when pumping directly into a treatment plant.

2.5.3.3 Pumps. Submersible centrifugal pumps installed in a sump are the preferred approach. Pump controls should be automatic based on wet well level. The controls should perform the following functions: starting and stopping, sequencing, alternating, sounding alarms, and low-level shutoff.

2.5.3.4 Force Mains. Force mains should be kept as short as possible. Check possibility of sulfide generation. Make provisions to control sulfide generation if necessary by injecting oxidizing chemicals such as chlorine, permanganate, or hydrogen peroxide. Consult suppliers of chemicals or generation and feed equipment on costs and expected performance.

a) Maintain minimum flow velocity of 3 fps (0.9 m/s).

b) Provide clean-outs and air relief valves as required.

2.5.3.5 Dependability. Use two separate and independent power sources with automatic switching equipment. Evaluate either two independent incoming powerlines or a standby engine-driven generator.

2.5.3.6 Wet Wells

a) Size. Wet wells should be as small as possible for economic reasons and to prevent settling out of suspended material. However, a wet well must be of adequate size to contain the pumps (for submersible pumps) to provide adequate depth for pump controls and to provide an adequate cycle time between successive motor starts to prevent overheating of the electric motors.

(1) Determine the length of cycle time by using Equation 1:

EQUATION: $$t = (V/D)[1/(1-Q/D) + (1/[Q/D])] \quad (1)$$

where

D = pump capacity, gpm (L/min)
V = wet well storage volume between high and low levels, gallon (liter)
Q = inflow to wet well, gpm (L/min)
t = total time between successive pump starts, min.

When Q = 0.5 D, Equation 1 is reduced to t = 4V/D.

To obtain the minimum wet well volume required, use Equation 2:

EQUATION: $$V = tD/4 \quad (2)$$

(2) Provide pump operating-cycle of at least 6 minutes for pump units less than 50 horsepower. Check with motor manufacturer for recommended maximum number of cycles for motor specified.

b) Bottom Slope. Slope wet well bottom toward the pump suction.

(1) Use slope of 1.75 vertical to 1 horizontal (1.75:1).

(2) A minimum slope of 1:1 is permitted only where special justification exists.

c) Suction Inlets. Provide tapered inlet for vortex suppression. Determine required submergence above highest open point of suction inlet based on the entrance velocity. Interpolate from the following table. Limit entrance velocity to 5 fps (1.5 m/s).

Submergence (ft (m))	Entrance Velocity (fps (m/s))
1.0 (0.30)	2 (0.61)
1.5 (0.46)	3 (0.91)
2.0 (0.61)	4 (1.22)
2.6 (0.63)	5 (1.52)

d) Ventilation. Provide a 4-inch (102-mm) minimum diameter vent with return bend and stainless steel bird screen.

2.5.3.7 Dry Wells (for other than submersible pump stations).

a) Size. Keep dry wells to the minimum size consistent with safe and convenient operation and with allowance for possible expansion.

b) Type of Pump. Use vertical pumps to conserve space (unless special conditions dictate otherwise).

c) Sumps. Provide the following:

(1) Minimum 20 gpm (1.3 L/s) capacity.

(2) Check valve in horizontal run.

d) Hoisting Facilities. Provide installed or portable hoisting facilities consistent with the size of the installation. Provide lifting eyes for a portable hoist.

e) Ventilation. Provide positive ventilation.

f) Provide potable water (if available) to dry well for general maintenance use.

2.5.3.8 Alarms. Provide both audible and visual alarms for wet well and pumps. Wet wells should have both high and low level alarms; provide pumps with flow switch alarms for pump

failure conditions. Telemetering should be considered for large or remote stations or for locations where failure to react to alarm condition could cause substantial damage.

2.5.3.9 Maintenance Considerations. For pumps and mechanical equipment, provide access for repair and means for removal. Facilitate maintenance and repair by planning for quick removal of vertical pumps installed in the wet well.

2.5.3.10 Equipment and Appurtenances. Refer to MIL-HDBK-1005/8.

2.5.3.11 Cold Regions Design. For design criteria in cold regions, refer to Department of Army Corps of Engineers TM 5-852.

2.5.4 Special Requirements for Pier and Wharf Systems. For collection systems pertaining specifically to piers and wharfs, refer to MIL-HDBK-1005/8.

2.5.5 Innovative Collection Systems. Vacuum sewers and pressure sewers are included in this category. Refer to MIL-HDBK-1005/8 for discussion on applications of these innovative collection systems. A case by case determination of specific application to industrial and oily waste should be performed.

2.5.6 Aircraft and Vehicle Washracks, Maintenance, and Service Areas. Washrack, maintenance, and service areas require special attention as discussed below.

2.5.6.1 Housekeeping

a) Keep outdoor maintenance surfaces clean by regular flushings during dry weather (pass these flushings to the industrial sewer if available).

b) When outdoor washracks or maintenance areas are not being used, and just before it begins to rain, close the sluice gate in the diversion chamber so that storm runoff flows into the storm sewer system.

c) Carry out washing and maintenance operations in designated areas (which should be as compact as conveniently possible). Consider the use of non-emulsifying degreasers.

d) Use dry absorbent materials to clean up oil and gasoline spills on pavements served exclusively by storm water sewers.

2.5.6.2 Appurtenances

a) Diversion Chamber

(1) Construction. Construct a manhole with conventional inflow and outflow storm sewer pipe, incorporating a small gated outflow to allow diversion of dry weather flows and the first increment of runoff during storms (see Figure 2). This also prevents flushing of oil and sediment from the trap during storm conditions.

(2) Hydraulic design. Design the main inflow and outflow pipes to pass storm flows, taking care to ensure that velocities of dry weather flows are sufficient to prevent solids deposition. Design the gated outflow pipe to pass dry weather flows. Pipe diameter should not be less than 6 inches (152 mm).

b) Grit Removal. Provide for gravity separation, washing, and removal of grit where load may block sewer. Use velocity control channel type, either manually or mechanically cleaned, with screw type agitated grit washer.

(1) Selection Basis. Use manually cleaned units for applications where grit load is less than 1 cubic ft (0.0283 cubic m) per day and use mechanically cleaned units for application where grit load is greater than 1 cubic ft/day.

(2) Design Basis. Provide at least two units sized to give 95 percent removal of P_{10} grit size at peak flow with units in service. Limit variations in flow velocity to a narrow range and use high values of V/Vs (maximum 70). Refer to WEF MOP No. 8, Wastewater Treatment Plant Design.

2.5.7 Paint Shops. The following special methods are applicable.

2.5.7.1 Paint Stripping. Paint stripping operations are the source of the most polluted and difficult to treat industrial wastes at Navy installations. Most Navy paint stripping operations use phenolic base strippers. The resulting wastewaters can contain high concentrations of phenols and substituted phenols, as well as chromate, hexavalent chrome, and ferrocyanide. If treatment experience on similar wastes is not available, conduct bench or pilot scale treatability studies. To reduce pretreatment requirements, emphasize source control measures.

a) Use gravity separator for control of paint solids prior to discharge to industrial sewer (if available). Remove paint solids periodically to offsite drying beds or containerize for direct landfill disposal. Establish hazardous or nonhazardous waste nature of solids by the toxicity characteristic leaching procedure (TCLP) (refer to Title 40 CFR, Part 261.24).

b) Use nonphenolic base strippers or dry stripping methods where possible.

2.5.7.2 Paint Booths. Where wet-type booths are utilized, water should be recirculated in a closed system provided with solids removal facilities. When discharge is required, the flow should be tested for TCLP and discharged accordingly. Solids should be removed and disposed. Establish hazardous or nonhazardous waste nature by TCLP method. The use of paper or peel-off floor and wall coverings is recommended.

2.5.8 Fire Training Areas. Wastewater from fire training areas contains unburned hydrocarbons, burn products, additives (purple-K-powder, AFFF), and sludges. Where AFFF is used, wastewater will have significant COD, TOC, BOD, and toxicity levels. Flow and load equalization should be provided prior to pretreatment or discharged to a POTW system. For AFFF wastewater collection and pretreatment recommendations, see Naval Civil Engineering Laboratory (NCEL) TM M-54-78-06, Disposal of Wastewater Containing Aqueous Film Forming Foam (AFFF) and MIL-HDBK-1027 series, Training Facilities.

2.5.9 Metal Plating Operations

2.5.9.1 Separate Collection Systems. Metal plating operations generate a variety of waste materials, including heavy metals, cyanides, oil and grease, solvents, degreasers, acids, and alkalies. Safety and cost-effectiveness of treatment dictate waste source isolation and separate collection systems for subsequent treatment or material recovery.

a) Cyanide-Bearing Wastes. Keep separate from acid wastes to avoid cyanide conversion to toxic hydrogen cyanide gas.

b) Chrome-Bearing Wastes. Keep separate from cyanide containing wastes so that hexavalent chrome can be acid reduced prior to alkaline precipitation with other metal-bearing wastes.

c) Mixed Chemicals. Keep acids and bases isolated and separate from chrome and cyanide wastes.

2.5.9.2 Volume Reduction. Plating process changes should be evaluated to minimize the volume of wastewater to be treated. New or modified plating processes should use still rinses, dragout rinses, or double or triple countercurrent rinses to minimize water use and wastewater treatment. Advanced treatment systems using evaporative techniques with minimal discharge volume have been successfully used at Navy facilities. Recycle of rinse water is also possible at certain plating shops. The extent of plating process modifications and water reuse depends on the quality of plating required.

2.5.10 Drydocking Facilities

2.5.10.1 Collection Systems. Refer to MIL-HDBK-1005/8.

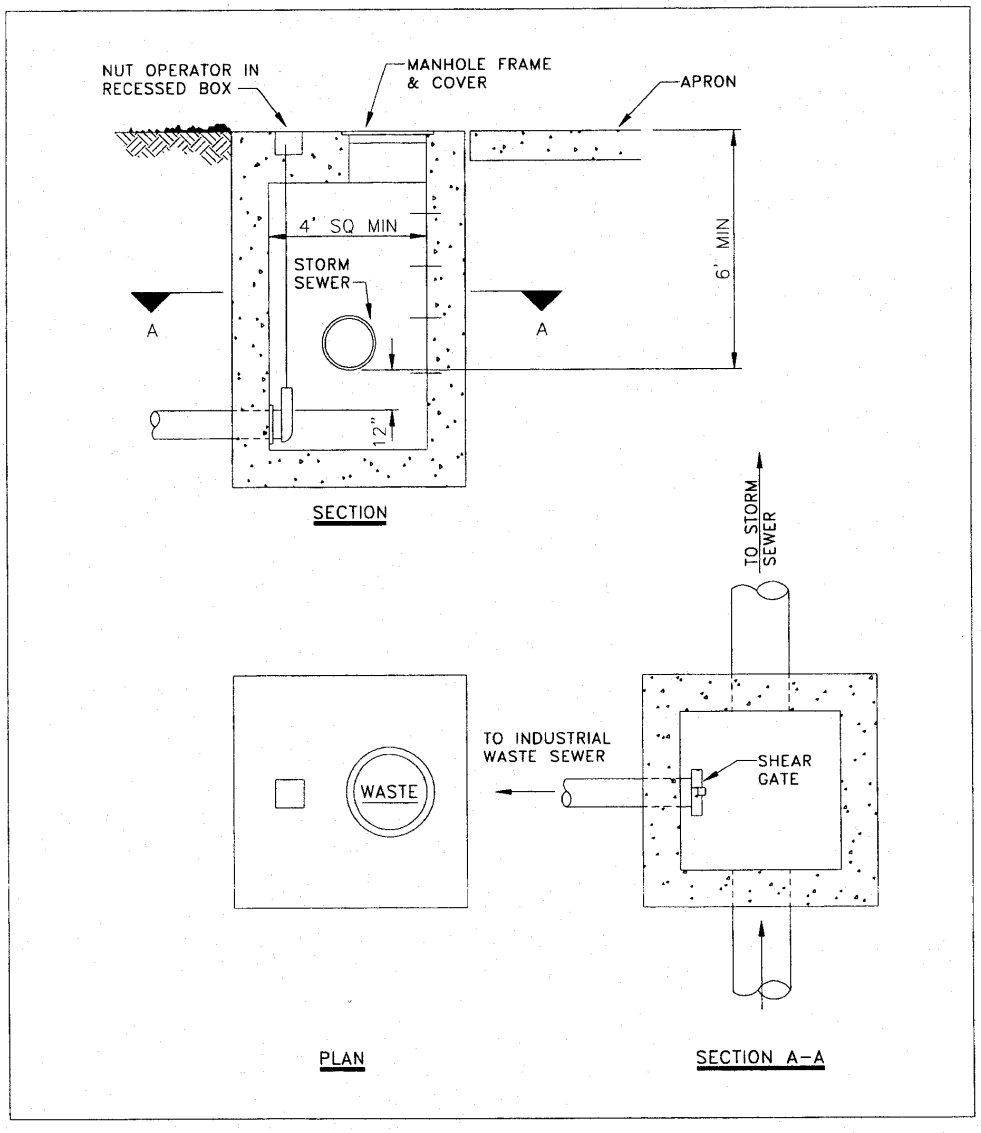

Figure 2
Wastewater Diversion Chamber

2.5.10.2 Treatment System. Principal pollutants in graving dock industrial wastewater are grit and suspended matter and heavy metals. Grit should be removed at the drydock facility using velocity control grit channel with an agitation-type grit washer (refer to paragraph 2.5.6.2). If flow and grit loads are small; pump discharge can be directly to grit washer. The need for heavy metal removal must be determined by wastewater monitoring on an individual-case basis considering local sewer ordinance and pretreatment requirements and drydock activities.

2.6 Wastewater Treatment

2.6.1 General Design Considerations. Refer to MIL-HDBK-1005/8 for guidance on many design considerations that are applicable to both domestic and industrial wastewater collection and treatment.

2.6.1.1 Effluent Limits. Follow NPDES permit requirements for industrial wastes that are treated at a NOTW (refer to paragraph 2.5.2). For industrial wastes that discharge to a POTW, obtain the necessary sewer use ordinance from the municipality. Sewer use ordinances will define industrial wastewaters that must be restricted from entering the system and define the necessary levels of various constituents prior to entry into the system (refer to paragraph 2.2).

2.6.1.2 Treatment Versus Pretreatment. Where possible, it is preferable to provide pretreatment and discharge to a POTW, rather than providing separate treatment of wastes from Navy facilities and then discharging into a water body. Separate treatment and discharge of industrial wastes should be considered only if a municipal system with sufficient capability to handle the waste is not located nearby, or if the surcharge costs levied by the municipality plus the cost for any pretreatment are excessive in comparison to separate collection and treatment. Pretreatment and discharge to a municipality versus separate treatment and discharge to a water body should be analyzed as a part of the preliminary engineering studies required in NAVFACINST 4862.5.

2.6.1.3 Receiving Water. Present policy is to use an outside contractor to haul difficult-to-treat wastes. In addition, deep well injection may be used for low-volume, difficult-to-treat industrial wastes if permitted by regulatory agencies. Suitability of proposed substrata must be determined for each specific case.

2.6.1.4 Sanitary Sewer. Avoid discharging industrial waste materials that may damage the wastewater collection and treatment facilities and/or cause potential personnel safety problems (refer to paragraph 2.4.5 and WPCF MOP No. 3).

2.6.1.5 Batch Versus Continuous Treatment. Batch treatment is preferable to continuous treatment of most industrial wastes from Navy installations. Batch treatment requires more tankage but allows greater process control than continuous treatment. The extra capital investment in providing holding and process tanks for batch treatment frequently offsets the cost of controls and operation and maintenance requirements for a continuous system. Batch treatment also provides additional reliability since unusual discharge conditions on industrial process lines are more easily accommodated. Use batch treatment except for large flows where continuous treatment offers significant advantages.

Design for flexibility in unit treatment processes and total treatment systems. Provide interconnections within the treatment facility to allow transfer of separated waste streams to holding units or other treatment units. This will facilitate treatment when separate collection systems are contaminated.

2.6.1.6 Disposal of Sludges

a) Process Selection. Sludge handling and disposal operations must be evaluated concurrently with wastewater treatment evaluations. Costs for sludge disposal can dictate process selection for the wastewater treatment system. Refer to MIL-HDBK-1005/8 for guidance on sludge processing operations. Bench or pilot scale testing is recommended to establish design parameters for industrial sludges.

(1) Testing should establish sludge production rates, dewatering characteristics, volume and mass to disposal, and hazardous or nonhazardous nature of the sludge.

(2) Perform the Toxicity Characteristic Leaching Procedure on sludges produced by alternative physical-chemical treatment processes before making final treatment process selection. Use of different chemicals for treatment (such as lime versus caustic soda) can affect the results of the TCLP and the declaration of the sludge as a hazardous or nonhazardous material. Refer to Title 40 CFR, Part 261.24 and amendments for test procedure and criteria.

(3) For special treatment or waste generation circumstances that produce hazardous wastes, consider application to EPA for delisting of waste to nonhazardous status. Delisting requires demonstration that the waste does not exhibit hazardous or reactive characteristics. Proving the waste nontoxic requires proving that the sludge could not leach hazardous materials at harmful concentrations. Refer to Title 40 CFR, Part 260, Subpart C.

b) Disposal Requirements. Contact the State and Federal regulatory agencies to determine restrictions that may be applied to ultimate disposal of industrial wastewater sludges. Limitations can be expected for handling and disposing of metal-bearing sludges resulting from wastewater treatment (biological or physical-chemical). Refer to the paragraphs above for application of the TCLP to sludge generation and disposal requirements.

c) Waste Hauler. For very small treatment operations, utilizing a private sludge hauler may be cost-effective. Waste hauler capabilities and qualifications should be closely scrutinized since improper disposal of industrial sludges will create liabilities for the Navy. The waste generator is responsible for ultimate disposal under the RCRA. Transportation of hazardous wastes is strictly regulated by the RCRA. Exclusion from some RCRA requirements has been allowed for waste generators producing less than 2,200 lb/mo. This upper limit applies to the total mass of waste (includes water

and nonhazardous components). Some recordkeeping, reporting, and waste manifest are not required for small generators but the waste must still be disposed in an approved site.

d) Landfill Disposal. The preferred method for ultimate disposal of industrial sludges is to provide dewatering and disposal of the dewatered sludge in a properly located and designed landfill. Refer to EPA PB 80-2200546, Process Design Manual, Sludge Treatment and Disposal for design considerations.

e) Land Disposal. Some biological and chemical industrial sludges that are not defined as hazardous may be acceptable for land disposal depending upon the sludge characteristics, soil conditions, and intended use of the site (that is, use of the site for crop production versus a dedicated disposal site). Contact regulatory agencies for local requirements and for maximum allowable loads to dedicated land disposal sites.

f) Recycle. Some metal waste treatment systems, particularly those for hard chrome and precious metal plating operations, have the potential of recovering waste materials for subsequent reuse. Reuse and recovery can reduce raw material and ultimate sludge disposal requirements.

2.6.1.7 Air Pollution Control. Some industrial processes (chrome plating, storage battery reclamation, metal pickling, and fuel combustion) may emit metallic fumes and vapors, acid droplets, and metallic oxides and salts. A condenser should be used for low efficiency removal of vapors in moist air streams. For high efficiency removal of vapors, a scrubber should be used. Efficiency mist collectors should be incorporated in the scrubber design. Refer to EPA 625/3-77-009, Controlling Pollution from the Manufacturing and Coating of Metal Products, Metal Coating Air Pollution Control - I and Solvent Metal Cleaning Air Pollution Control - II.

2.6.2 Reuse/Recycle

2.6.2.1 Cooling Water Recycle. The equipment and processes that utilize water for indirect (noncontaminating) cooling should be identified as a part of the Preliminary Engineering Studies required by NAVFACINST 4862.5. Consideration should be

given to utilizing “cascade” or direct recirculation systems for noncontaminated cooling waters, particularly in water short areas. In a cascade system, cooling water discharged from one unit may be utilized in another process where temperature of incoming water is not critical. Direct recirculation systems require a cooling tower to dissipate the net heat load.

2.6.2.2 Reclamation. There are a number of processes and equipment, most of them proprietary, that may be utilized for reclaiming metals in plating wastes or removing materials so that the reclaimed water can be reused. Manufacturers should be consulted for design criteria.

a) Demineralization. The five methods available for demineralization of wastewaters are ion exchange, selective metal recovery using immobilized ligands, reverse osmosis, electrodialysis, and distillation. These processes are generally too costly to consider except where reuse is a necessity. Distillation appears to be the most feasible method for regenerating wastewaters in polar regions (refer to NCEL AD 282520, Sanitary Waste Disposal for Navy Camps in Polar Regions).

b) Evaporation. Evaporation systems, such as the waste heat or vapor compression evaporation process, can be used to recover heavy metals from plating solutions. Concentration and reuse using evaporation is particularly applicable to chromic acid solutions. The distilled water from evaporation can be reused as process rinse water, and the high purity water results in low rinse water use.

c) Ion Exchange. Ion exchange can be applied to chromium rinse waters with use of other membrane technologies. A system that contains a cation exchange bed followed by an anion exchange bed can remove the contaminants of concern from the chromium-bearing wastewater stream. The cation exchange resin will remove the metal ions under optimal conditions. The anion exchange resin under optimal conditions will remove the chromate ion (CrO_4^{-2}) from the solution. With the addition of electrodialysis (ED) and advanced reverse osmosis (ARO), a closed looped system can be designed. Electrodialysis will recycle the H_2SO_4 to the cation exchange column while the metals are removed as sludge. The anion exchange column effluent will

be separated by ED into NaOH and chromic acid, both of which are recycled. ARO will then separate the water to be recycled and brine salts for disposal.

d) Metallic Replacement. Silver or copper recovery can be achieved by using the replacement process where a metal that is more chemically active than the metal to be recovered is placed into the waste solution. The more active metal goes into solution, replacing the less active metal which precipitates (or plates) out and is recovered. Zinc or iron, in the form of either dust or finely spun wool, is often used to recover silver or copper. Unlike evaporation or ion exchange, relatively clean water is not recovered in this method.

e) Electrodeposition. Electrolytic recovery can be used to recover valuable metals such as silver or copper. When a direct electrical current of the proper density is passed through the wastewater of a single plating process, the metal in solution plates out in a pure form on the cathode.

f) Operating Requirements. Most reclamation systems require sophisticated equipment; thus, the ability of the operating personnel and the manner in which the Navy operates a specific facility may limit the use of some recycle processes.

2.6.3 Hazardous and Toxic Substances. Special handling, treatment, and disposal procedures are required for hazardous and toxic substances that may be encountered at Naval facilities. Refer to MIL-HDBK 1005/13, Hazardous Waste Storage, and to the hazardous waste management plan of the facility. Refer to OPNAVINST 4110.2, Hazardous Material Control and Management, for guidance on hauling and disposal of hazardous materials.

2.6.4 Pretreatment Process Selection. Wastewater from Navy industrial facilities will be discharged to a POTW sewer system or to a separate NOTW system for receiving industrial waste. In either case, pretreatment will normally be required to either minimize the interference upon subsequent treatment processes or to provide more effective treatment on a special waste stream. Table 6 summarizes the common pretreatment operations, which must be considered at Naval facilities. Selection guidelines require that sufficient pretreatment be provided to satisfy

local sewer use ordinances and EPA pretreatment requirements or to reduce contaminants to threshold limits which will not adversely affect biological treatment processes at NOTW. Threshold limits will generally be greater than local and pretreatment limits. Refer to Tables 1 and 3 for threshold limits of heavy metals.

2.6.5 Physical-Chemical Treatment Process Selection. Most industrial wastes from Navy facilities that are collected separately will require physical-chemical treatment (refer to MIL-HDBK-1005/8 for biological treatment alternatives which may be considered for certain organic containing industrial wastes following bench or pilot testing). The physical-chemical treatment processes that should be evaluated are summarized in Table 7.

Guidance for chemical selection and feeding requirements is presented in Section 4. The following paragraphs discuss the basic physical-chemical treatment processes used for treatment of industrial wastes from Navy facilities.

2.6.5.1 Neutralization. Neutralization is the reaction of compounds having active hydrogen or hydroxyl ions to form water and chemical salts. The degree of neutralization is measured by pH. Flow and load equalization tanks may necessarily precede the chemical neutralization process. Sludge production rates, settleability, and dewaterability should be considered in selection of neutralizing chemicals.

a) Chemicals. Lime, caustic soda, sulfuric acid, waste acid and alkali, carbon dioxide, sodium bicarbonate, limestone (beds), and combustion gases.

b) Waste Types and Characteristics. Neutralization reactions may occur between a strong acid or base and a strong base or acid, respectively, or between a strong acid or base and a weak base or acid, respectively. The amounts of neutralizing chemical required must be determined by laboratory testing and preparation of titration curves.

Table 6
Process Selection Guide for Pretreatment of Industrial Wastewater

Purpose	Process	Selection Guide
Flow and load equalization	Balancing storage	Use prior to batch or semicontinuous treatment of industrial wastes to reduce design flow and load rate and provide controlled discharge of industrial wastes or ship discharges to sanitary sewers.
Removal of hexavalent chromium (Cr^{+6})	Chemical reduction followed by chemical precipitation	Pretreat before biological treatment (at NOTW) if hexavalent chromium concentration at plant influent exceeds EPA industry standards. Confirm treatability at NOTW with testing or pilot plant. For discharge to a POTW, check local sewer ordinance pretreatment limits and satisfy these stricter criteria. Eliminate at source, if possible.
Removal of heavy metals	Chemical precipitation (hydroxide or sulfide)	Use prior to biological treatment (at NOTW) of total heavy metals concentration exceeds EPA industry standards. Confirm treatability at NOTW with bench or pilot scale testing if possible. Pretreat before waste mixes with other components of flow to plant. For discharge to a POTW, check local sewer ordinance pretreatment requirements.
	Ion exchange	Use where recovery of metals is desired. Not recommended as a pretreatment process for metal removal without recovery by regeneration of the ion exchange column.
Removal of cyanide (CN^-)	Chemical oxidation	Use prior to biological treatment (at Navy facility) if cyanide concentration at plant influent exceeds EPA industry standards. For discharge to POTW, check local sewer ordinance pretreatment requirements. Treat cyanide stream before it mixes with other waste streams.

Table 6 (Continued)
Process Selection Guide for Pretreatment of Industrial Wastewater

Purpose	Process	Selection Guide
	Electrolysis	Consider for low flow, high strength cyanide waste streams (such as batch dumps).
Removal of phenol (C_6H_5OH)	Biochemical oxidation Chemical oxidation	Need depends on discharge criteria. Where required, removal best accomplished in biological treatment plant with other biodegradable organic wastes. Use bench testing or pilot plant to determine removals (acclimation required). Use chemical oxidation where biological treatment is not available or is not possible because of toxicity problems or insufficient BOD.
pH adjustment	Neutralization	Use prior to biological treatment where pH is frequently less than 6.0 or greater than 9.0 (check treatability with bench scale or pilot plant). Treat highly acid or alkaline at source.
Removal of emulsified or dissolved oil. Emulsion breaking.	Acidification and/or coagulation with flotation. Adsorption on activated carbon.	Need depends on pretreatment criteria.
Removal of free oil	Gravity separation. Hydrocyclone separation.	Need depends on pretreatment criteria.
Removal of hydrogen sulfide (H_2S)	Aeration. Chemical oxidation.	Use if sulfides exceed 50 mg/L or if odor is a persistent problem or hazardous gas conditions occur. Eliminate at source, if possible.

Table 7
Physical-Chemical Treatment of Industrial Wastes

Purpose	Recommended Process	Recommended Chemical and Requirements	Reaction	Tankage Requirements	Recommended Process Control	Remarks
Destruction of cyanide (CN)	Alkaline chlorination	Chlorine and sodium hydroxide or lime. Determine requirements by experiment. Theoretical dosage = 6.8 lb Cl_2/lb.	Two stages: (1)Oxidation of cyanide to cyanate (CNO). (2)Complete oxidation of cyanate to nitrogen gas (N_2).	Provide at least 90-min detention for each stage. Equip each tank with propeller agitator to provide at least one turnover per min.	Use electronic recorder-controllers to maintain optimum conditions: 1st stage (CN→CNO): ORP: 350 to 400 mV pH: 10 to 11.5 2nd stage (CNO→N_2): ORP:600 mV pH: 8 to 8.5	Use common feed line for alkali and chlorine to avoid possibility of localized acid conditions. Bench testing required to determine dosage since oxidation of other waste components exerts Cl_2 demand.
	Hydrogen peroxide (H_2O_2) oxidation	Hydrogen peroxide, trace catalyst metal (such as copper) and sodium hydroxide. Theoretical dosage = 1.3 lb H_2O_2/lb.	Two stages: (1)Oxidation of CN to CNO (2)Hydrolysis of CNO to carbon dioxide (CO_2) and ammonia (NH_3).	Mixing and reaction tank. See remarks.	pH: 8.5 to 10	Bench scale testing required to determine H_2O_2 and catalyst dosage and reaction time since oxidation of other waste components exerts H_2O_2 demand.
	Electrolytic oxidation	Exhaust ventilation equipment, heating and mixing equipment.	Destruction of cyanide at anode of electrolytic cell.	Tankage depends upon waste volume to current ratio and initial concentration of CN.	T = 200°F (93.3°C). Anode current density from 30 to 80 amp/sq. ft (333 to 861 amp/m^2). 2.5 to 3.5 kWh/lb CN (5.5 to 7.7 kWh/kg).	Additional treatment may be necessary depending on effluent standards.
Destruction of phenols (C_6H_5OH)	Alkaline chlorination[1]	Chlorine and sodium hydroxide. Determine requirements by experiment. Theoretical dosage = 10.5 lb Cl_2/lb.	Complete oxidation possible.	Provide at least 4-h detention. Equip each tank with propeller agitator to provide at least one turnover per minute.	Use electronic recorder-controller to maintain optimum conditions: ORP: 250 to 300 mV pH: 7 to 10 T = 45°F (7.2°C)	Use high calcium lime for large flows. Consider use of chlorine dioxide or ozone as oxidant for high ammonia concentrations. May cause problems by formation of toxic chlorophenols.

Table 7 (Continued)
Physical-Chemical Treatment of Industrial Wastes

Purpose	Recommended Process	Recommended Chemical and Requirements	Reaction	Tankage Requirements	Recommended Process Control	Remarks
	Hydrogen peroxide (H_2O_2) oxidation[1]. Potassium permanganate ($KMnO_4$) oxidation[1].	Hydrogen peroxide and trace metal catalyst (such as ferrous sulfate). Theoretical dosage = 5.1 lb H_2O_2/lb. Potassium permanganate and sodium hydroxide. Determine requirements by experiment.	Complete oxidation possible; reaction rate declines rapidly outside pH 3 to 4 range. Complete oxidation possible. Optimum reaction rate at 9<pH<9.5.	Mixing and reaction tank.	Use electronic recorder-controller to maintain optimum conditions of pH 3 to 4.	Bench scale testing required to define dosage and reaction time. Copper, aluminum, iron and chromium can serve as catalysts. Incomplete oxidation forms hydroquinone.
Removal of chromium (Cr^{+3}, Cr^{+6})	Acid sulfonation followed by precipitation.	Sulfur dioxide, sodium metabisulfite or sodium sulfite; sulfuric acid; sodium hydroxide. Determine requirements by experiment.	Two stages: (1)Reduction of Cr^{+6} to Cr^{+3} at acid conditions. (2)Precipitation of Cr^{+3} as $Cr(OH)_3$ at alkaline conditions.	Mixing and reaction tank. Provide 1 to 3-h detention time. Filtration may follow for precipitate removal. 1st stage: Provide 4-h (1-h if continuous) detention time. Equip tank with mixer to provide one turnover per minute. 2nd stage: See hydroxide precipitation of heavy metals (below).	Dosage on ration to phenol level. Use electronic recorder-controller to maintain pH at 9.0 to 9.5 and to maintain optimum conditions: 1st stage: ORP: 250 to 300 MV pH: 1.8 to 2.5 2nd stage: pH: 8.5	May create sludge difficulties. For large waste streams use high calcium lime and sulfur dioxide gas. Oxidizing agents (oxygen and ferric iron) increase required amount of reducing agent. Settling required to capture metal hydroxide sludge. Granular media filtration or DAF may be required for low effluent chrome limits.
Neutralization of alkali waste	Addition of acid	Acid wastes if available; otherwise sulfuric acid.	Experiment needed to define reaction rates, chemical feed requirements, and sludge production.	Mixing required	Pace acid feed rate to flow based on bench scale titration curves.	Design to minimize sludge production. Use stepwise batch neutralization for high alkalinity wastes to minimize exothermic reaction and improve process and effluent control.

Table 7 (Continued)
Physical-Chemical Treatment of Industrial Wastes

Purpose	Recommended Process	Recommended Chemical and Requirements	Reaction	Tankage Requirements	Recommended Process Control	Remarks
Removal of heavy metals	Precipitation: hydroxide or sulfide	Select chemical based on flow rate, treatability, effluent limits, and sludge production rate and dewatering ability. Conduct treatability study to determine chemical requirements.	Experiment needed to define reaction rates, optimum operating points, sludge characteristics	Mixing and sedimentation required	Use electronic recorder-controller to maintain optimum pH conditions determined by experiment.	Ion exchange may be used to concentrate waste stream prior to treatment. Settling required to capture metal precipitation sludge. Filters required for low effluent metal limits.
Recovery of metals for reuse	Evaporation	For acid solutions, recover in small dip tanks immediately following the plating solution.	Evaporation and concentration.	Evaporators, concentrated solution holding tank.	Water salts may build up in recirculated rinse water.	Ion exchange can be used to pretreat solution to remove salts before evaporation.
Removal of phosphorous	Precipitation	High calcium lime and alum. Determine requirements by experiment (for estimate use: Ca:Al:P = 3:2:1).	Experiment needed to define reaction rate and sludge characteristics	Mixing, flocculation, and sedimentation required.	Use electronic recorder-controller to maintain optimum pH conditions determined by experiment.	Refer to EPA Process Design Manual, Phosphorous Removal. In activated sludge plant, chemicals can be added just prior to aeration tanks, eliminating need for separate flocculation and settling tanks.
Removal of colloids	Coagulation followed by sedimentation			Same as above	Same as above	Perform jar test experiments to determine mixing and flocculation reaction time and power gradients, sludge settleability and dewaterability.

Table 7 (Continued)
Physical-Chemical Treatment of Industrial Wastes

Purpose	Recommended Process	Recommended Chemical and Requirements	Reaction	Tankage Requirements	Recommended Process Control	Remarks
Removal of emulsified oil. Emulsion breaking.	Coagulation followed by flotation. Acidification prior to coagulation may be required.	See Table 13		Mixing flocculation, and sedimentation with skimming of DAF. Acid mix tank may be required for breaking difficult emulsions.	Same as above	Avoid emulsion breaking by salting out with NaCl due to corrosion and ineffectiveness. Determine emulsion breaking chemical types and dosages by bench or pilot scale tests.
Removal of soluble, refractory organics	Granular-activated carbon	See Table 9	Adsorption. Conduct bench or pilot scale experiments to define adsorption characteristics and carbon adsorption capacity.	Contactor tanks (see Table 9)	Refer to EPA PB 259147, Process Design Manual, Carbon Adsorption.	Consider using PAC with activated sludge where removal of refractory organics is needed (consult Zimpro, Inc. for proprietary system and performance data).
Removal of heat	Cooling towers or ponds	Tower capacity or pond size to dissipate required heat	Evaporative cooling	Depending on temperature change needed and mixing provided (for ponds).	If recycle system, makeup and blowdown to control dissolved solids.	Consult manufacturers for tower cooling capabilities. Consider use of waste heat to operate evaporator in metal recovery process.

[1]Where possible, biochemical oxidation of phenols is preferable to chemical oxidation.

c) Sludge Production. Sludge production and disposal, and scaling must be considered in design of neutralization systems.

(1) Waste solutions with no suspended solids or dissolved solids at less than saturation concentration produce negligible sludge upon neutralization.

(2) Waste solutions with or without suspended solids, but saturated dissolved solids (such as $CaSO_4$) in the neutralized mixture, create sludge handling and significant scaling problems.

d) Treatment Process Alternatives. The following treatment alternatives should be considered for neutralization.

(1) Lime addition. Use limestone ($CaCO_3$) as beds or pellets, quicklime (CaO), or hydrated lime ($Ca(OH)_2$).

(2) Limestone beds. Use upflow or downflow systems. Limit acid concentration to 0.3 to 0.6 percent to minimize bed coating with calcium sulfate. Use recirculation to reduce required bed depth. Load at less than 1 gpm/square ft (40 L/min/square m) for downflow beds. Higher rates may be used for upflow beds since solids and precipitate are carried out.

(3) Chemical Mixing. If mixing is required, provide 200 to 400 horsepower per million gallons of tank’s capacity (mechanical-type mixer). Check pumping or turnover rate of mixing equipment.

(4) Acid neutralization. Use sulfuric or hydrochloric acid for strong acid neutralization of alkaline wastes. Use carbon dioxide, sodium bicarbonate, or fuel combustion gas for weak acid neutralization and final adjustment of pH.

(5) Process Staging. Provide at least two separate stages for dampening pH fluctuations in continuous flow systems. Additional stages are required for strong acid and alkaline wastes and for fine tuning pH to desired effluent

level. Use staged operation for batch treatment to complete neutralization in at least two steps. Use smaller pH increments (one to two units) for strong wastes.

e) Process Control. Use self-cleaning pH probes and control systems that allow feed forward, feed back, proportional, and manual control options.

2.6.5.2 Precipitation. Chemical precipitation involves alteration of the ionic equilibrium to produce insoluble precipitates that can be removed by sedimentation or granular media filtration. The process can be preceded by chemical oxidation (as for copper (Cu^{+}) removal) or chemical reduction (as for chrome (Cr^{+6}) removal) to change the oxidation state of the metal ions to a form that can be precipitated. The principle metal precipitates are metal hydroxides, metal sulfides, and metal carbonates.

a) Metal Ion Solubility. Heavy metal ion solubility depends on the specific metal, system pH, temperature, and degree of chemical complexation with organic and inorganic ions. The effect of pH on solubility of selected heavy metal hydroxides and sulfides is shown in Figure 3. Solubility of metal carbonates is not shown since it is dependent on wastewater alkalinity. Listed metal sulfides are less soluble than the metal hydroxide at the same pH.

b) Precipitation Chemicals. Use lime or caustic soda for pH adjustment for metal hydroxide precipitation. Use hydrogen sulfide, sodium sulfide, or sodium bisulfide for metal sulfide precipitation. Use sodium hydroxide with carbon dioxide for metal carbonate precipitation.

c) Co-Mingled Metal Systems. Wastewaters that contain several metals in solution may not be treatable by adjustment to a single pH with a single chemical (for example, cadmium and zinc cannot be simultaneously precipitated at optimum pH for minimum metal hydroxide solubility). If these metals occur in the same wastewater, two-staged (or more) treatment is required. Alternatively, sulfide precipitation could be used at a selected pH to produce approximately equal low soluble metal levels. The solubilities presented in Figure 3 should be used for preliminary guidance only. Actual metal

solubility will depend on ionic strength, temperature, and degree of chemical complexation. Bench scale or pilot plant testing must be conducted to determine actual metal removals at various adjusted wastewater pH values. Both soluble and total metal concentrations in the treated effluent should be measured during the testing program.

d) Sludge Production. Determine volume, mass, settleability, and dewaterability of sludges produced during treatability study. Using TCLP, determine the toxicity for alternative chemical precipitants (selection of lime versus caustic soda can affect the results of TCLP).

e) Coagulants. Coagulants such as iron salts, alum, and polyelectrolytes may be required to enhance flocculation and settleability of the metal precipitates.

f) Process Design. Use batch treatment systems whenever possible. Provide reaction tankage for staged treatment with each stage capacity sufficient to treat total volume of wastewater expected during the treatment period. Use batch tank as reactor and preliminary settler. Expected batch treatment cycle is approximately 4 hours. If greater tankage volume is required to accommodate duration of wastewater flow, consider off-line storage of excess wastewater rather than continuous flow treatment.

(1) Hydroxide precipitation. Provide mixed tank with feed and multiple supernatant drawoff lines or drawoff by telescoping valve (if batch reactor will also be used as settling basin). If sulfate concentration in waste is high, calcium sulfate scale will be a problem when lime is used. Consider caustic soda to avoid scaling.

(2) Sulfide precipitation. Provide mixed tank with sulfide (gas or Na_2S slurry) feed and multiple supernatant drawoff lines or drawoff by telescoping valve (if batch reactor will also be used as settling basin). Maintain reactor pH between 8 to 9.5 using a caustic to minimize formation of toxic hydrogen sulfide gas. Provide excess sulfide in reactor to drive precipitation reaction. Provide post-treatment aeration

to oxidize excess sulfide to sulfate. Alternatively, use ferrous sulfide (FeS) slurry as the sulfide source to eliminate formation of hydrogen sulfide gas.

(3) Sedimentation. Sedimentation is required following precipitation reactions unless metal precipitate levels are low enough for direct filtration. Use direct filtration only if performance has been verified by pilot plant studies. Evaluate polymer conditioning to enhance sludge settleability. For continuous flow systems, use circular or rectangular clarifiers with or without inclined parallel plate (or tube) settling assistance. Provide a means for scum and float removal so that scum discharges to the sludge holding tank or returns to treatment process. Provide complete access for plant operator to manually scrape down plate settlers. Consider air agitation and scour beneath plate or tube settler to blowdown sludge plugging to underflow while clarifier effluent valve is temporarily closed. For batch settling processes, use either chemical reactor or separate clarifier tank. Provide multiple drawoff ports or telescoping valve for supernatant withdrawal.

(4) Filtration. Filtration following sedimentation may be required to satisfy low discharge metal limits or if metal precipitate coagulates and settles poorly. Evaluate polymer and alum coagulation for enhanced settleability before using filters. Consider pH effect on cementation of filter media.

(5) Sludge Dewatering. Since metal sludge will usually be classified as a hazardous waste, select dewatering equipment to optimize cake solids concentration and to minimize volume and weight for ultimate disposal. Use fixed or variable volume plate and frame press for mechanical dewatering if cake disposal follows immediately. Consider centrifuge, vacuum filter, or belt filter press for thickening prior to dewatering on permitted sand drying beds.

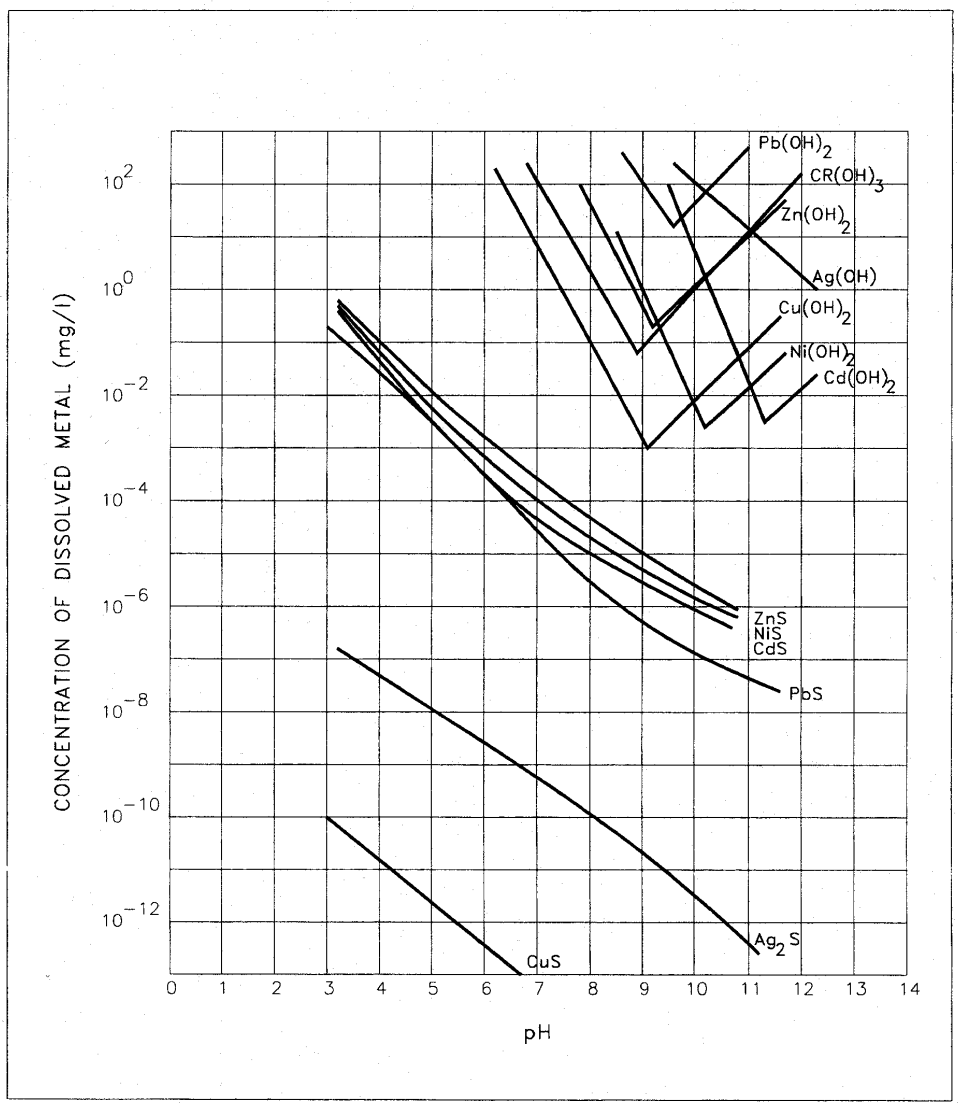

Figure 3
Solubility of Metal Hydroxides and Sulfides as a Function of pH

g) Process Control. Process pH control is absolutely essential for favorable performance. Use self-cleaning pH probes and oxidation-reduction potential (ORP) probes. Metal hydroxide precipitates will resolubilize if operating pH varies from optimum. Metal sulfide precipitates are less sensitive to loss of pH control and are less affected by metal chelates and metal complexes.

h) Process Performance. Hydroxide and sulfide precipitations are highly reliable if proper monitoring and control are maintained. Estimated achievable maximum 30-day average concentrations of several heavy metals under different chemical precipitation processes are shown in Table 8.

2.6.5.3 Chemical Oxidation. The primary purpose of chemical oxidation is to enhance the treatability of industrial wastes and to detoxify (if possible) hazardous wastes. Oxidation is accomplished by addition of oxidizing agents, such as chlorine, permanganate and ozone. Examples of chemical oxidation of industrial wastes from Navy facilities are destruction of hydrogen sulfide, cyanide, and phenol, conversion of cuprous ion (Cu^{+}) or ferrous ion (Fe^{+2}) to the more treatable cupric ion (Cu^{+2}) and ferric ion (Fe^{+3}), respectively.

a) Oxidizing Agents. Use chlorine gas or liquid, or solutions of hypochlorite salts, ozone, potassium permanganate, oxygen (by aeration), or hydrogen peroxide. See Table 7 for selection of oxidizing agent and for application guide. In absence of treatability data on similar waste, conduct bench or pilot scale tests to determine treatability, reaction rates, dosage, and catalyst requirements, and the formation of noxious or toxic reaction byproducts.

b) Process Design Consideration. Use batch treatment whenever possible. Provide for sufficient excess feed capacity of oxidizing agent to satisfy full expected range of contaminant and extraneous reducing agents. This should be determined by bench or pilot testing of wastewater spiked with appropriate reducing agents.

Table 8
Estimated Maximum 30-Day Average for Lime and Sulfide Precipitation[1]

Metal	Final Average Concentrations (mg/L) Lime ppt. Followed By Sedimentation	Lime ppt. Followed By Filtration	Sulfide ppt. Followed By Filtration
Antimony, Sb	0.8 to 1.5	0.4 to 0.8	
Arsenic, As	0.5 to 1.0	0.5 to 1.0	0.05 to 0.1
Beryllium, Be	0.1 to 0.5	0.01 to 0.1	
Cadmium, Cd	0.1 to 0.5	0.05 to 0.1	0.01 to 0.1
Copper, Cu^{+2}	0.05 to 1.0	0.4 to 0.7	0.05 to 0.5
Chromium, Cr^{+3}	0.0 to 0.5	0.05 to 0.5	
Lead, Pb	0.3 to 1.6	0.05 to 0.6	0.05 to 0.4
Mercury, Hg^{+2}			0.01 to 0.05
Nickel, Ni	0.2 to 1.5	0.1 to 0.5	0.05 to 0.5
Silver, Ag	0.4 to 0.8	0.2 to 0.4	0.05 to 0.2
Selenium, Se	0.2 to 1.0	0.1 to 0.5	
Thallium, Ti	0.2 to 1.0	0.1 to 0.5	
Zinc, Zn	0.5 to 1.5	0.4 to 1.2	0.02 to 1.2

[1]EPA 600/2-82-001c, Treatability Manual, Vol. III.

(1) Chlorine oxidation. Use chlorine gas or liquid (depending on dosage rate) with caustic or hypochlorite solution only for oxidation of cyanide (see Table 7 for operational conditions).

(2) Hydrogen peroxide (H_2O_2) oxidation. Use for oxidation of cyanide at alkaline pH (8.5 to 10) in presence of trace concentration of copper catalyst. Use for oxidation of phenols at acidic pH (3 to 4) in presence of trace concentration of metal (Fe, Al, or Cu) catalyst. Since the intermediate reaction product (hydroquinone) is adsorbed and consumes adsorbent capacity that may be required for heavy metal removal, avoid incomplete oxidation of phenols if treatment is followed by granular-activated carbon.

(3) Potassium permanganate ($KMnO_4$) oxidation. Use for oxidation of hydrogen sulfide, mercaptans, and phenols. Retention times should be determined by bench or pilot scale testing and are typically 1 to 3 hours.

(4) Residuals. Oxidation can create precipitates that must be separated by subsequent clarification and filtration. Need for additional treatment should be determined during bench testing study.

c) Process Control. Use electronic recorder-controllers with self-cleaning probes for pH and ORP.

2.6.5.4 Activated Carbon. Table 9 presents additional considerations for granular-activated carbon (GAC) which may be used to provide effluent polishing following treatment of specific industrial wastes.

a) GAC should be included in heavy metal waste treatment facilities only as a standby treatment unit for use during process upsets or outages for maintenance. GAC may be required for polishing effluent prior to direct discharge under a NPDES permit. It should not be required for continuous use as pretreatment prior to discharge to a POTW.

GAC treatment economics dictate that precipitation, flocculation, and filtration processes be upgraded and controlled prior to installation of GAC columns.

b) Powdered-activated carbon (PAC) addition to activated sludge systems should be considered for treatment of wastewaters containing biorefractory organic compounds. However, adsorption of these compounds to PAC and subsequent discharge with waste-activated sludge may create a sludge that is a hazardous waste.

2.6.5.5 Other Treatment Processes and Operations. Other treatment processes that are applied to industrial wastes are sedimentation, coagulation, and flotation. Sedimentation and coagulation are discussed in MIL-HDBK-1005/8. Flotation for oily waste treatment is discussed in Section 3.

2.6.6 Naval Aviation Depot (NADEP)

2.6.6.1 Operations. Typical operations at NADEP include metal surface cleaning, metal fabricating, metal finishing, metal plating, and aircraft paint stripping and spraying.

Table 9
Granular Carbon Adsorption Treatment Applications

Design Factors	Type of Carbon Adsorption Treatment Secondary	Advanced
Pretreatment requirements	Chemical clarification using primary coagulants to achieve maximum suspended solids removals. If the suspended solids concentration is higher than 50 to 65 mg/L, prefiltration should be considered.	Any type of standard primary with secondary processes.
Activated carbon facilities:		
Activated carbon particle size	8 x 30 mesh	8 x 30 or 12 x 40 mesh
Hydraulic loading	2 to 6 gpm/ft^2 (81.5 to 244.5 L/min-m^2) with one unit being backwashed and one unit out of service.	3 to 8 gpm/ft^2 (122.2 to 326.0 L/min-m^2) with one unit being backwashed and one unit out of service.
Contact time	30 to 50 min	15 to 40 min
Backwash rate	20 to 30 gpm/ft^2 (814.9 to 1222.4 L/min-m^2)	10 to 15 gpm/ft^2 (407.5 to 611.2 L/min-m^2)
Surface wash	Recommended	Recommended
Recommended bed expansion	40%	40%
Carbon bed depth	15 to 30 ft (4.6 to 9.2 m)	10 to 20 ft (3.05 to 6.10 m)
Flow configuration	Fixed beds in series or parallel, moving beds, and expanded upflow beds.	Fixed beds in series or parallel, moving beds, and expanded upflow beds.
Carbon requirements	Determine by experiment (range = 300 to 1,000 lb/Mgd [3106 to 10,354 kg/m^3-s]	Determine by experiment (range = 250 to 500 lb/Mgd [2588 to 5177 kg/m^3-s])
Carbon regeneration facilities[1]		
Regeneration type	Multiple hearth[2]	Multiple hearth[2]
Percent of time required on stream	40 to 60%	40 to 60%
Additional makeup carbon per pound carbon regenerated	10%	10%
Furnace operating temperature	1650 to 1800°F (899 to 982°C)	1650 to 1800°F (899 to 982°C)
Air pollution control equipment	Flue gas quench and scrubber system	Flue gas quench and scrubber system
Activate carbon performance evaluation[3]	Determine by bench or pilot scale study	Determine by bench or pilot scale study

[1]Use offsite regeneration unless economic advantages significantly favor onsite facilities.
[2]For a carbon regeneration requirement of less than 8,000 lb/d, consider a rotary kiln type furnace.
[3]For description of adsorption isotherm test and column test procedures, refer to Process Design Techniques for Industrial Waste Treatment, by Adams and Eckenfelder.

2.6.6.2 Wastewater Characteristics. The wastewater generated from these operations contains numerous constituents including chromium, cyanide, phenol oil, and various heavy metals.

2.6.6.3 Treatment System. Preliminary Engineering Studies should be conducted in accordance with NAVFACINST 4862.5 to establish the appropriate treatment processes to be applied to wastewater sources at NADEP installations. Refer to paragraph 2.6.4 for treatability study requirements. Figure 4 shows a system schematic for treatment or pretreatment of NADEP wastewater. It assumes separate collection systems for mixed (acid and alkali) wastewater, phenolic wastes, cyanide wastes, and chrome bearing wastes. A separate treatment scheme is provided for each wastewater. The treatment systems, however, have piping and operational flexibility to treat any of the individual wastewaters in series in the event that cross-contamination (connection) occurs in the collection system. GAC columns are not shown in the schematic.

GAC may be required for effluent polishing to remove metals or partially oxidized phenol. Treatment process schematics and control logic for batch chrome reduction, batch cyanide oxidation, and batch phenol oxidation are shown in Figure 5. Treatment process schematics and control logic for batch and continuous flow metal precipitation are shown in Figure 6.

Concentrated oily wastewaters and wastewaters containing solvents and degreasers should be handled separately (refer to Section 3). Low levels of oil and grease can be accommodated by the systems shown in Figure 4.

2.6.7 Naval Air Station

2.6.7.1 Operations. Operations generating industrial wastes at a typical air station include washracks and service maintenance areas. Other operations can include those found at NADEP installations (refer to paragraph 2.6.6).

2.6.7.2 Wastewater Characteristics. Wastes from washracks and maintenance and service aprons will predominantly consist of oils and solids.

2.6.7.3 Treatment System. Preliminary Engineering Studies should be conducted in accordance with NAVFACINST 4862.5 to determine the appropriate treatment facilities. Treatment will usually consist of a collection sump with a diversion structure for bypassing storm water flow followed by a gravity oil-water separator. Clear water can be discharged to the POTW or to the industrial waste sewer (if available) depending on the concentration of metals and detergents. Refer to Section 3 for additional information on oily waste treatment

2.6.8 Naval Shipyard

2.6.8.1 Operations. Operations at naval shipyards that generate industrial waste can be extensive and depend on the size of the yard. Wastes include metal working and plating, maintenance, paint spraying and stripping, and miscellaneous shop work.

2.6.8.2 Waste Characteristics. The predominant wastes are oils, solids, and heavy metals. Phenols will be present in wastewater from paint stripping operations.

2.6.8.3 Treatment System. For oily waste collection and treatment, refer to Section 3. Wastewater from plating, paint stripping, paint spraying, maintenance, pipe shop, and other miscellaneous sources should be segregated at the source into waste streams indicated for NADEP installations in Figure 4. Collection of such streams is recommended with treatment as shown in Figure 4. Wastes from drydock operations should be introduced to this treatment scheme after grit removal.

2.6.9 Paint Spray and Stripping Shop

2.6.9.1 Operations. The primary operations include the use of stripping and washdown solutions for removing paint and spray booths for applying new paint.

2.6.9.2 Waste Characteristics. Paint stripping operations produce small volumes of heavily polluted wastewater that is difficult to treat. Paint booth wash waters accumulate metals from the captured aerosols and from the water curtain discharges of spray paint operations. Principal pollutants are common metals, hexavalent chromium, ferro-cyanide, and solvents

(primarily phenols). Paint booth sludge is also generated intermittently when booths are cleaned. This sludge should be evaluated for its hazardous waste nature by the EP toxicity test. Some reduction in sludge volume can be achieved on drying beds if proper climatic conditions exist. This reduces the cost of ultimate sludge disposal.

2.6.9.3 Treatment System. The wastewater can be pretreated onsite for phenol removal using the peroxide oxidation scheme shown in Figure 5. Since wastewater volumes are small, batch reactor tankage and onsite chemical storage requirements are small. The effluent can be pumped to a central treatment facility for removal of cyanide, hexavalent chrome, and other metals. Alternatively, since volumes are small, they could be hauled by a truck and stored at the central facility for subsequent treatment. Because of the characteristics of paint stripping wastes, limited or no onsite pretreatment is the preferred method of waste handling. Treatment should be conducted at a central facility.

2.6.10 Miscellaneous Shops

2.6.10.1 Operation. Naval installations include a variety of miscellaneous operations. These include machining, parts cleaning and overhaul, boiler operations, and vehicle and engine repair.

2.6.10.2 Waste Characteristics. Typically, the wastes from miscellaneous shop operations are low volume continuous discharges or periodic batch dumps. The materials generally included in the waste discharge are oily or of some petrochemical base (for example, degreasing operations, machining oils, cleaning solutions, and solvents).

2.6.10.3 Treatment System. Most waste from miscellaneous shop operations can be handled in conjunction with other wastes previously described in paragraphs 2.6.6 through 2.6.9. Substitute chemicals or procedures should also be considered to minimize troublesome wastes from miscellaneous shops. For example, use of dry cleaning methods rather than wet cleaning procedures as an option.

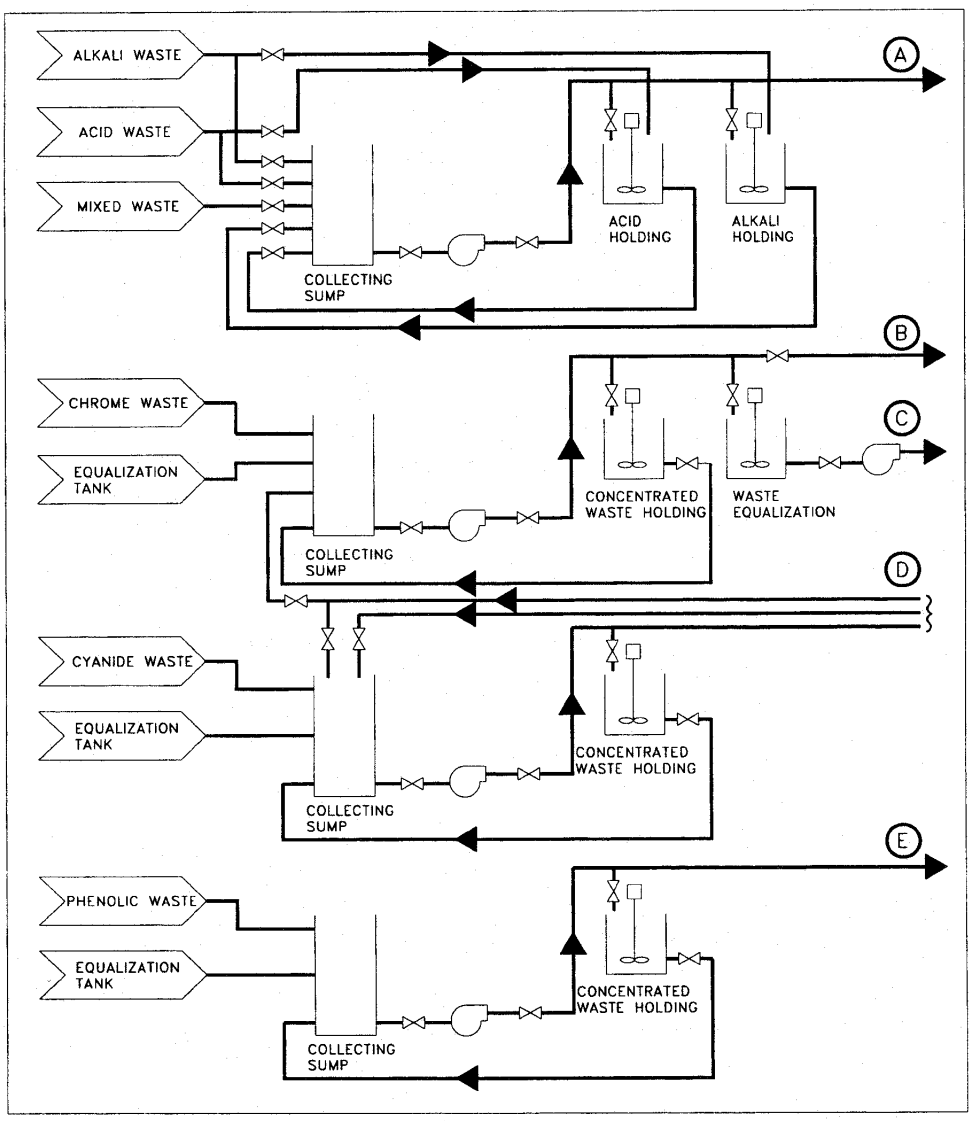

Figure 4A
NADEP Wastewater Treatment Flow Schematic

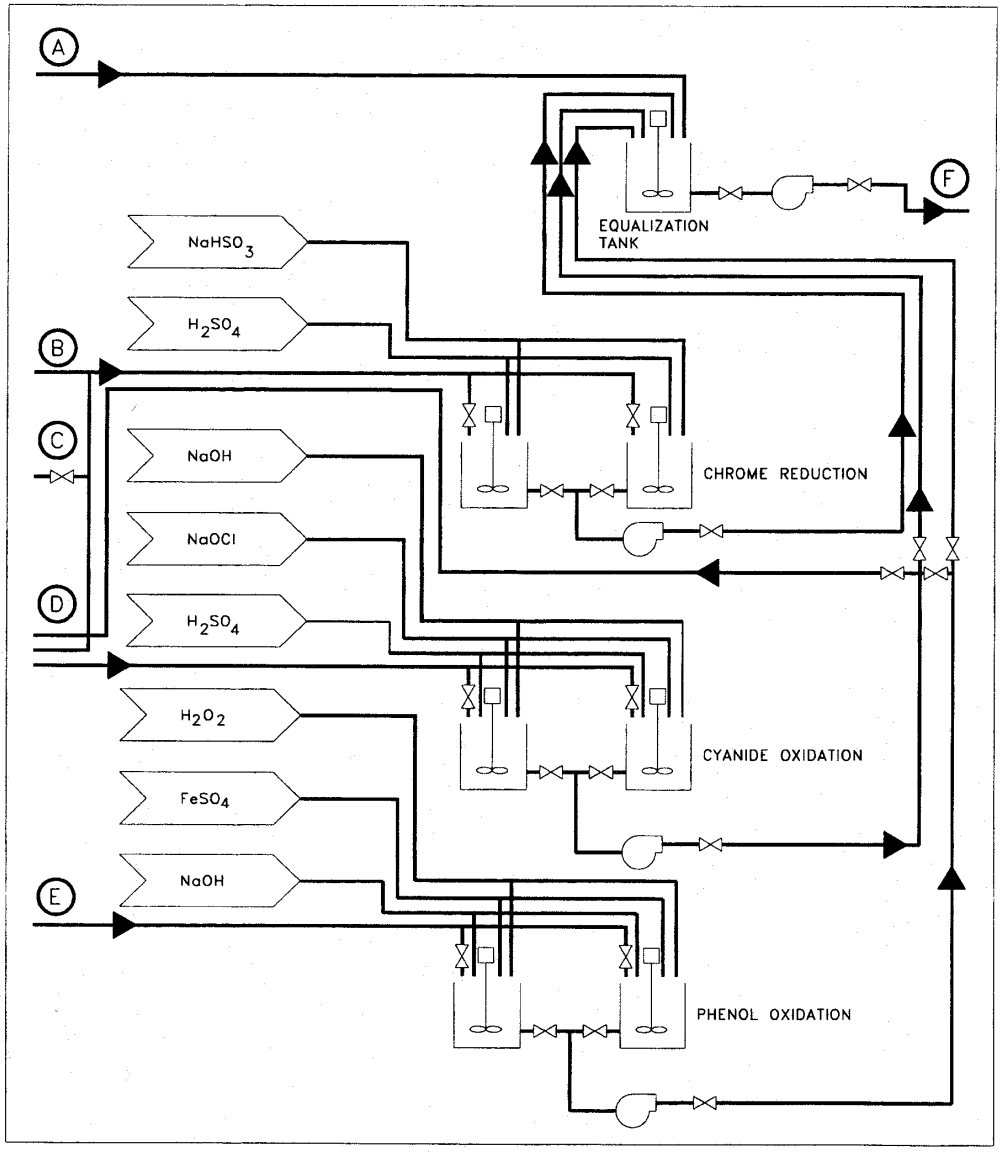

Figure 4B
NADEP Wastewater Treatment Flow Schematic

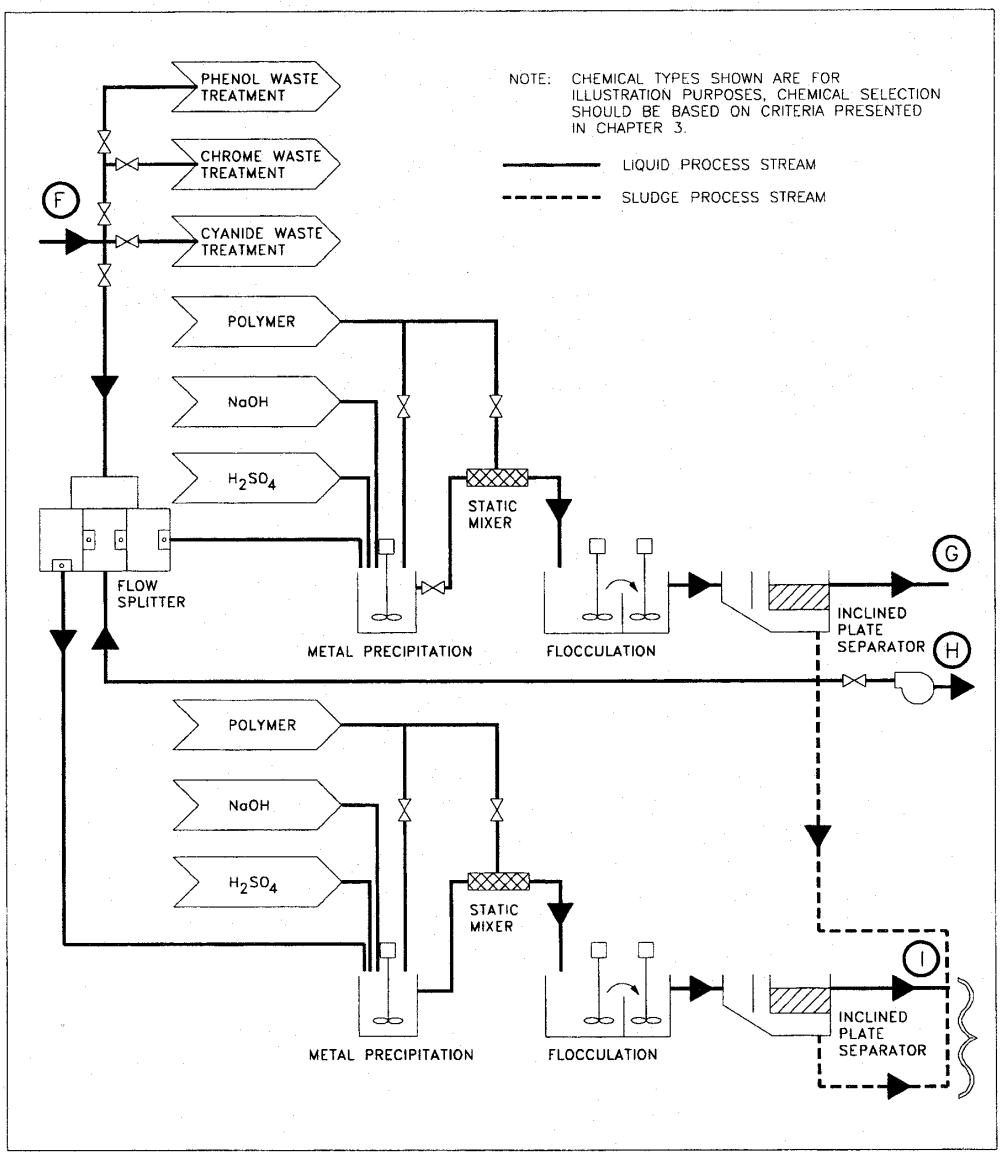

Figure 4C
NADEP Wastewater Treatment Flow Schematic

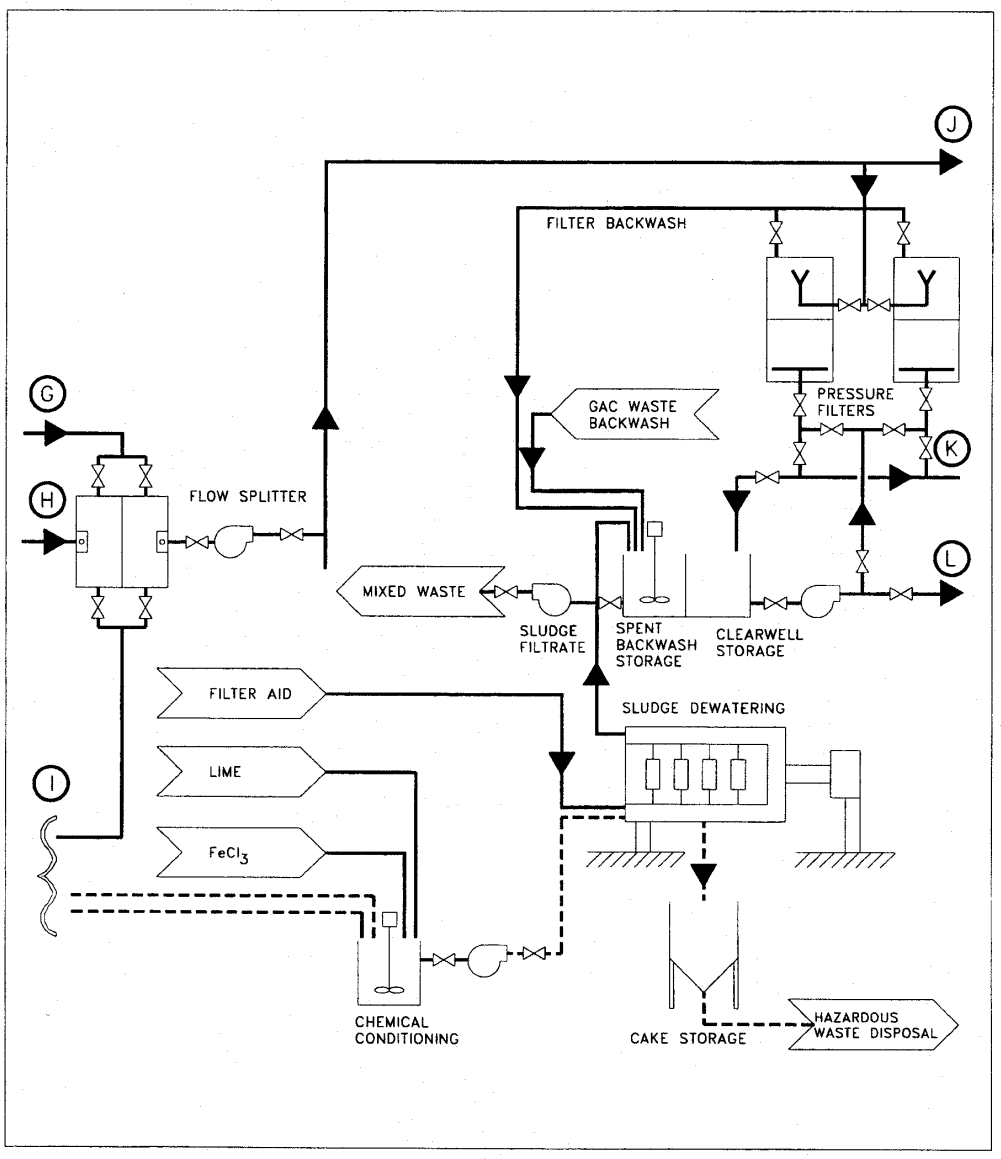

Figure 4D
NADEP Wastewater Treatment Flow Schematic

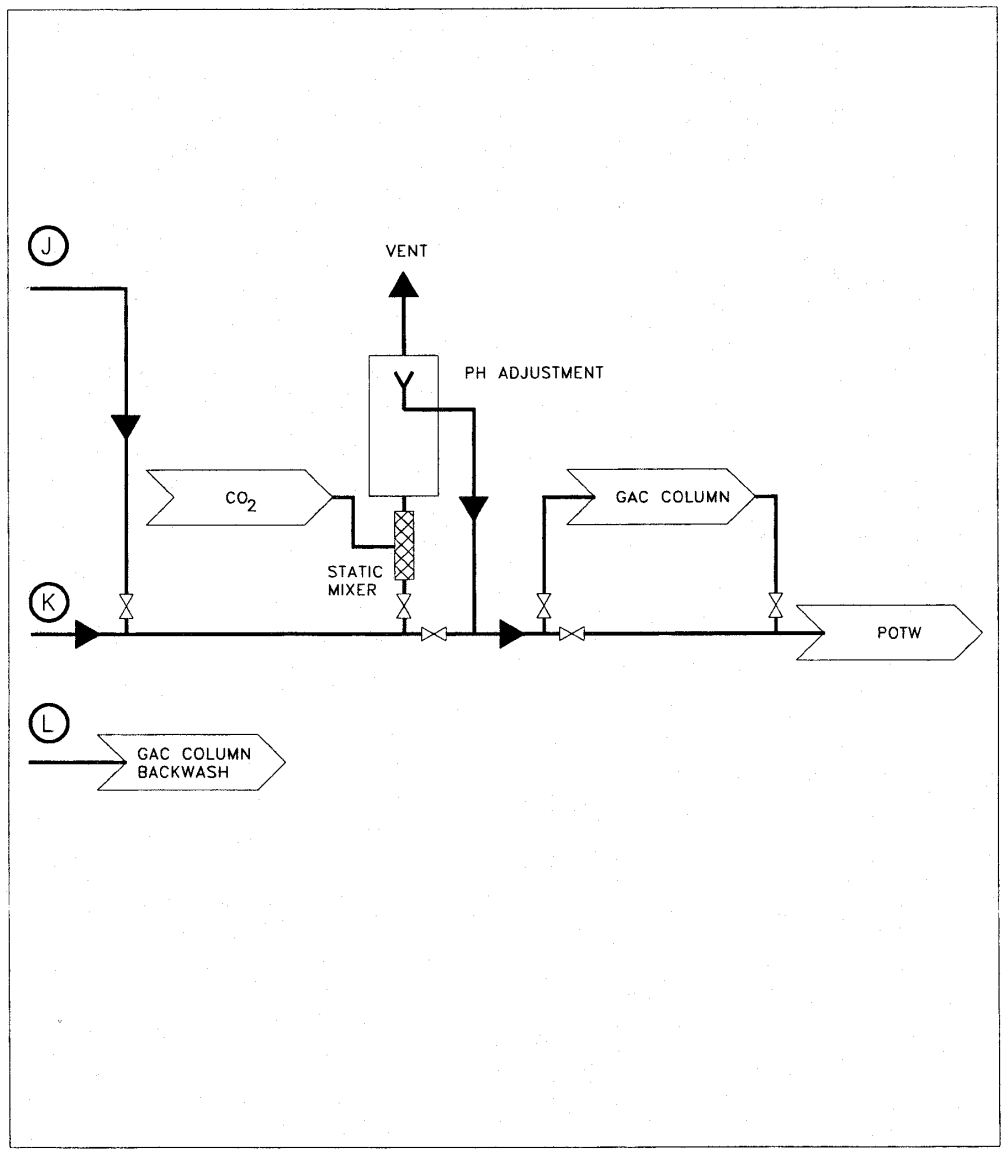

Figure 4E
NADEP Wastewater Treatment Flow Schematic

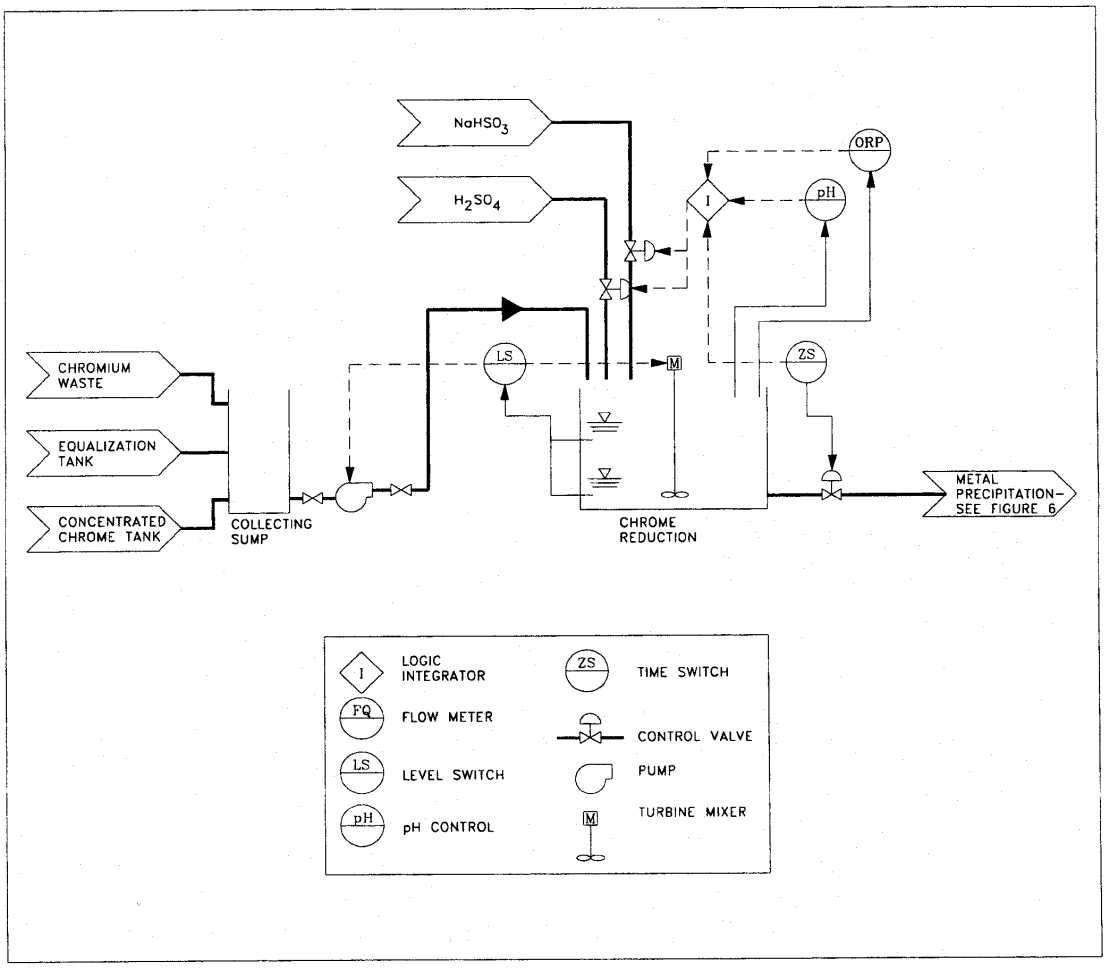

Figure 5A
Process Schematics for Chrome Reduction, Cyanide Oxidation, and Phenol Oxidation

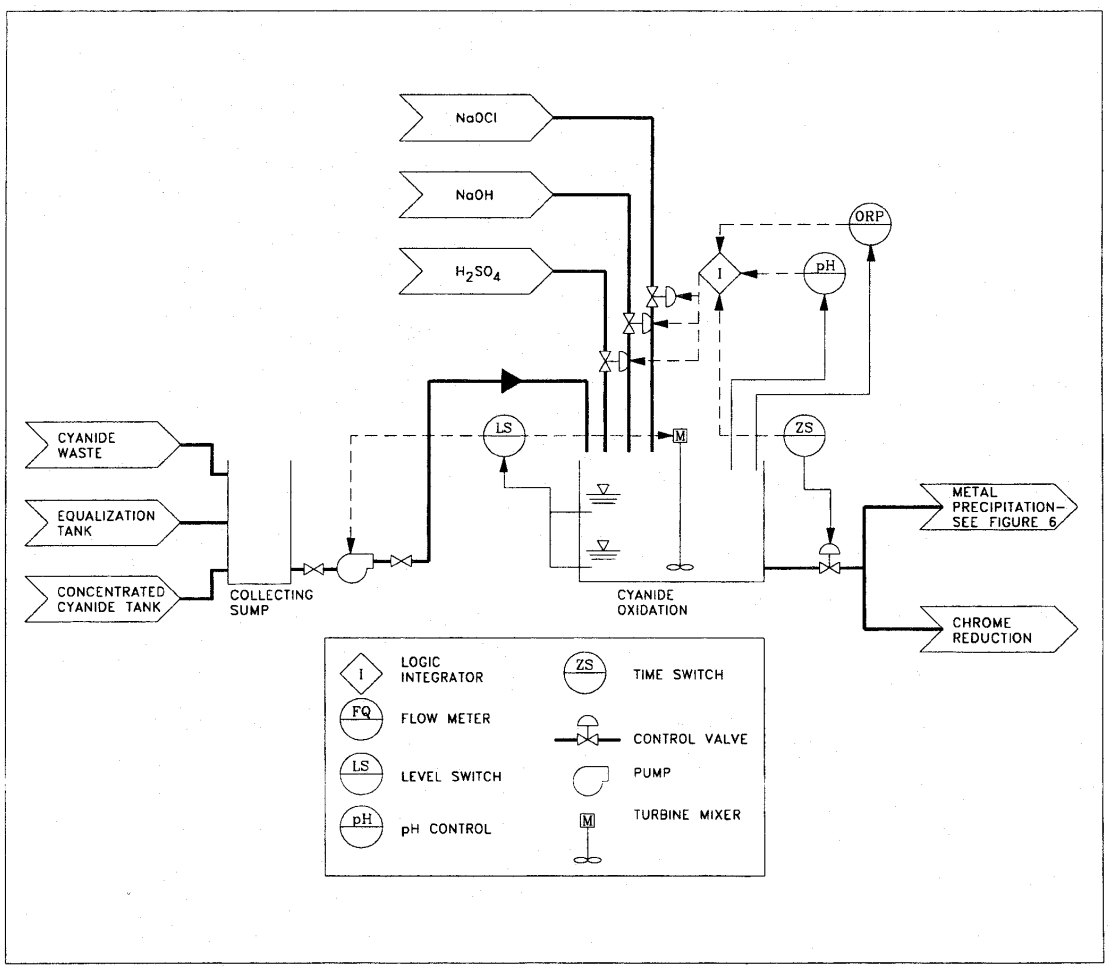

Figure 5B
Process Schematics for Chrome Reduction, Cyanide Oxidation, and Phenol Oxidation

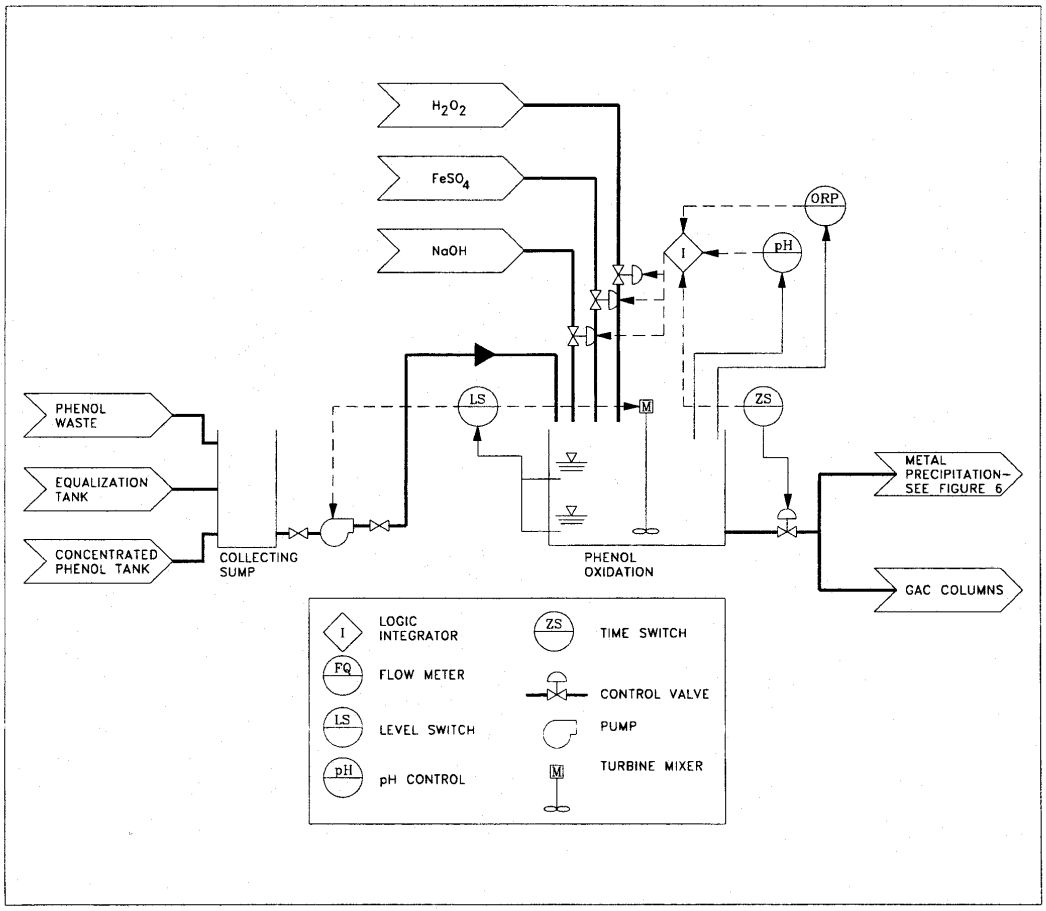

Figure 5C
Process Schematics for Chrome Reduction, Cyanide Oxidation, and Phenol Oxidation

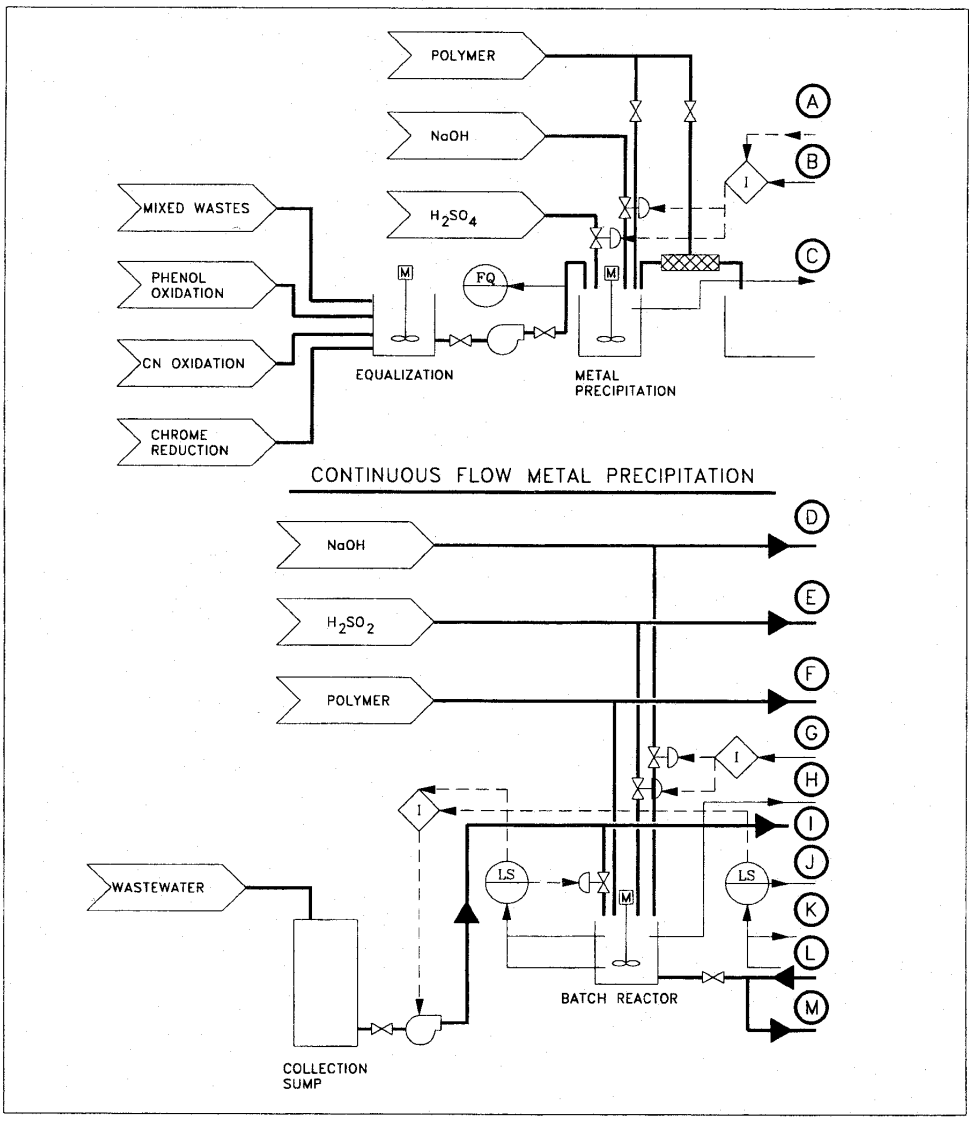

Figure 6A
Process Schematic for Batch and Continuous Flow Metal Precipitation

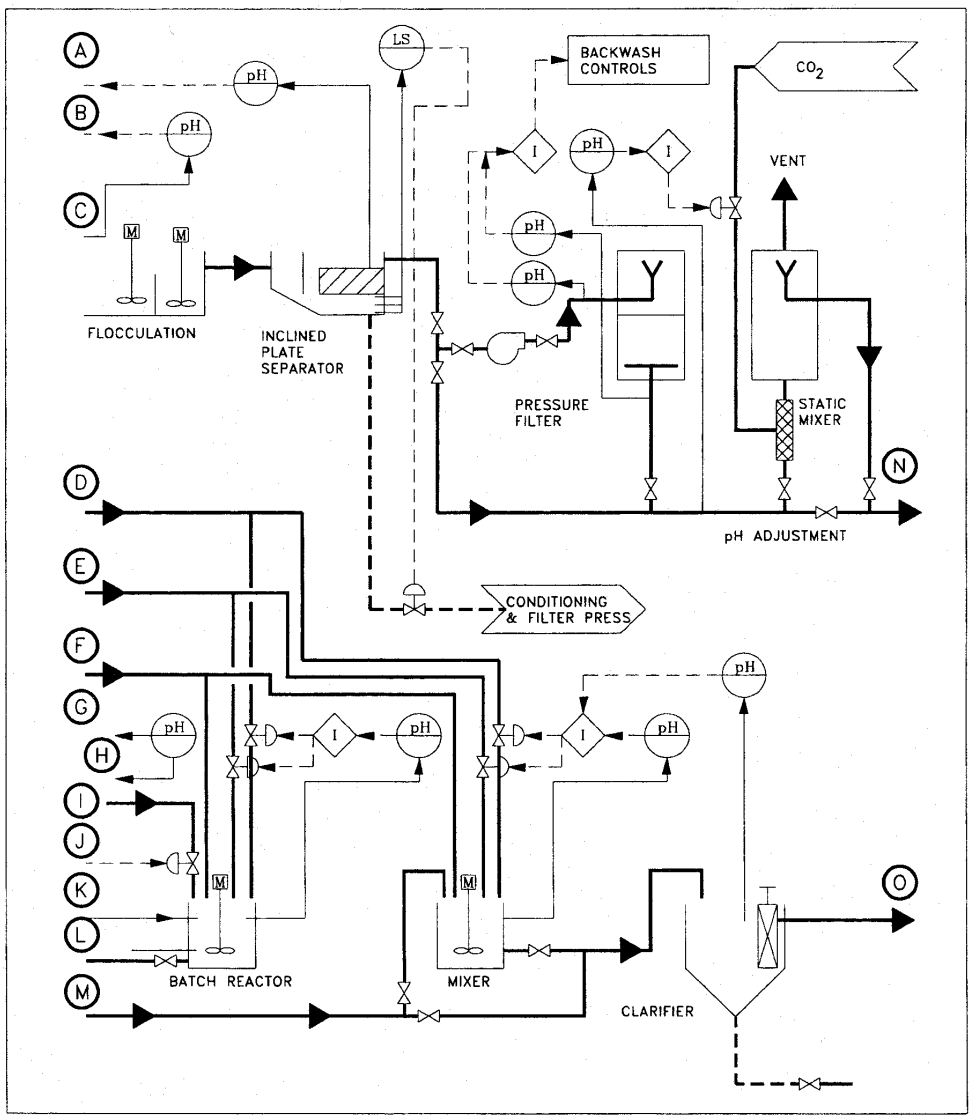

Figure 6B
Process Schematic for Batch and Continuous Flow Metal Precipitation

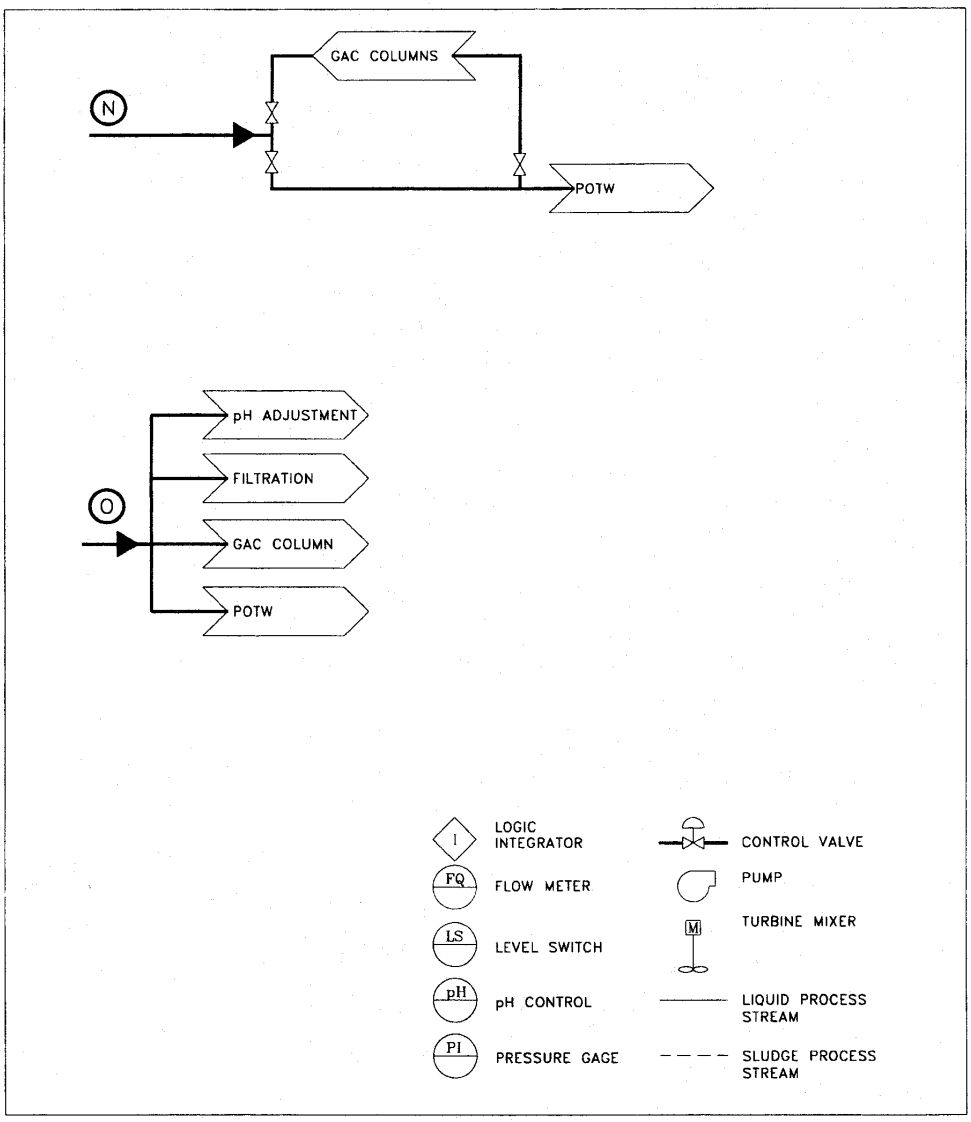

Figure 6C
Process Schematic for Batch and Continuous Flow Metal Precipitation

2.6.11 Facilities Layout. Layout and plot size of new and upgraded industrial waste treatment facilities is frequently dictated by the space available at the base site. These local guidelines should be followed as long as the resulting facility layout does not create potentially hazardous or unsafe working and operating conditions. These conditions can result by placing cyanide waste treatment units too close to caustic neutralization units or acid storage, or in potential areas of leaking pipes and conduits. Adequate space should be allocated for satisfying chemical storage requirements and safety criteria for ventilation of fumes and clear space for pipe routes. Space for laboratory, office, and operating personnel support facilities should not be sacrificed for more treatment reactor space.

A suggested layout diagram for a complete industrial waste treatment facility is shown in Figure 7. This layout is coordinated with the treatment schematic for NADEP shop wastewaters (Figure 4). It includes phenol and cyanide oxidation, chrome reduction, metals precipitation, and co-mingled waste treatment and sludge dewatering.

2.6.12 Color Coding of Piping Systems. The color code for identification of piping systems should comply with the American National Standards Institute (ANSI) A13.1, Scheme for the Identification of Piping Systems recommendations. The color scheme includes pipe fittings, valves, and pipe coverings, but excludes pipe supports, brackets, and other accessories, as well as conduits for solids carried in air or gas. Apply the following general color scheme to piping systems at waste treatment facilities. See Table 10 for recommended color coding for typical piping systems for industrial and domestic wastewater treatment facilities. These color coding schemes are applicable only for treatment facilities and do not affect the coding scheme recommended in MIL-HDBK-1005/8 for pier, wharf, and drydock utility connections.

2.6.12.1 Federal Safety Red. This classification (ASA Class F-fire) includes sprinkler systems and other firefighting or fire protection equipment. Applications include sprinkler piping, identification and location of fire alarms and boxes, extinguishers, fire blankets, fire doors, hose connections, hydrants, and other firefighting equipment.

2.6.12.2 Federal Safety Yellow. This group includes materials that are inherently hazardous because they are flammable or explosive, toxic, or produce poisonous gas. Applications include flammable liquids such as gasoline, naphtha, fuel oil, chlorine gas, sulfur dioxide, ammonia, and steam.

2.6.12.3 Federal Safety Orange. This classification includes ASA Class D dangerous materials such as corrosive liquids, acids, and alkalis. Applications include concentrated acid, caustic soda, lime slurry, or hydrogen peroxide solution piping.

2.6.12.4 Federal Safety Green. This classification includes ASA Class S safe materials which involve little or no hazard to life or property in handling. Applications include low temperature and pressure, nonpoisonous and nonflammable liquids and gases, drinking water, service water, emergency showers, and eyewash facilities.

2.6.12.5 Federal Safety Blue. This classification includes ASA Class P protective materials. The materials used for washdown and for lawn watering are piped through plants for the express purpose of being available to prevent or minimize the hazards associated with dangerous materials. These materials are not typically used at naval wastewater treatment facilities.

2.6.12.6 Other. In addition to these recommended color codes, piping systems can be more specifically identified by applying color bands and by painting the name of the material on the pipe. Refer to ANSI A13.1 for specification details of legend marker.

Pipes carrying hazardous materials should be further identified with flow directional arrows and operating pressures (for steam lines and other high-pressure systems).

2.7 Guidelines From Actual Experience

2.7.1 Post Occupancy Evaluation Reports. The Navy has had experience constructing and operating several industrial wastewater collection and treatment systems. The Post Occupancy Evaluation Reports have identified numerous lessons that have been learned through actual experience. Previous designs specifying operational errors and omissions must not be repeated

on any new or retrofitted facility. The following paragraphs summarize items that need to be considered. The guidelines have been grouped into four categories: design factors, operational factors, equipment selection, and material selection.

2.7.2 Design Factors. The following points should be considered:

a) Effluent discharge limits set by regulatory agencies should be evaluated closely and renegotiated with the issuing agency (if there is sufficient justification) prior to proceeding on facility plant design.

b) Treatment operational requirements should be kept as simple as possible. Use instrumentation and controls only to reduce operating manpower requirements or hazard exposure. Highly automated control systems have not been successful at Navy facilities. The degree of automation should be optimized by balancing specific project factors. For example, a highly automated system that requires a few well trained operators and considerable instrument maintenance must be compared against a system with less automation but greater operator attention. The degree of automation must reflect the specific Navy facilities staffing capabilities. In most instances, this will include automatic feed system, motorized valves, and other systems that minimize relatively simple treatment tasks.

c) Operational considerations must be closely coordinated with waste treatment plant design to achieve an efficient and reliable facility.

d) Collection sewers, pumping facilities, and treatment tanks for acids and cyanides should be located completely separate from each other to avoid severe safety hazards and mixing. Facilities should be separate and designed so that spills or leaks could not result in cross connection between the acid and cyanide operations.

e) Leakage of industrial wastes or sludges from any container or vessel such as tanks, pipes, and sand drying beds must be avoided. Provide emergency drains and spill containment area drains.

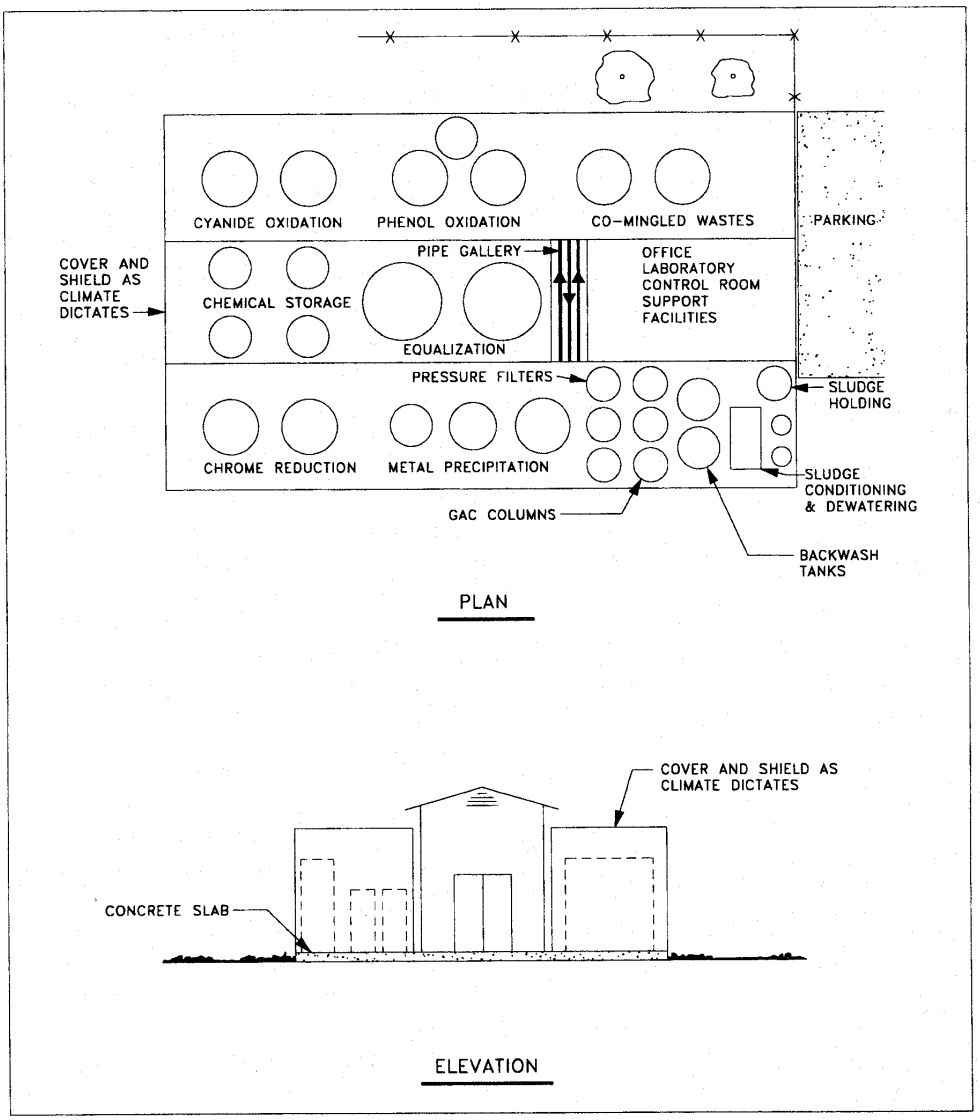

Figure 7
Layout for Industrial Waste Treatment Facility

Table 10
Color Coding Criteria for Piping Systems at Wastewater Facilities[1]

Pipe System	Color Code
Compressed air	Green with white bands
Potable and service water	Green
Waterline for heating digester (anaerobic)	Blue with red band
Nonpotable water	Blue with white bands
Firefighting	Red
Natural gas	Orange with black bands and legend
Sludge gas (anaerobic digester)	Orange with white bands and legend
Raw sludge (any sludge)	Brown with black bands and flow direction
Sludge recirculation suction	Brown with yellow bands and flow direction
Sludge recirculation discharge	Brown with flow direction
Sludge drawoff	Brown with orange bands and flow direction
Raw domestic wastewater	Gray with flow direction
Chlorine gas	Yellow with legend
Sulfur dioxide gas	Yellow with black bands and legend
Ammonia gas	Yellow with red bands and legend
Caustic soda and lime slurry	Orange with black bands, legend, and flow direction
Concentrated acid (H_2SO_4, HCl)	Orange with red bands, legend, and flow direction
Hydrogen peroxide feed	Orange with blue bands, legend, and flow direction
Cyanide phenol and mixed wastewater	Orange with flow direction[2]

[1]Does not apply to piping at pier, wharf, and drydock facilities. Refer to MIL-HDBK-1005/8, paragraph 3.4.13 for pier, wharf, and drydock facilities.
[2]Further color coding of segregated wastes is not practical since they are usually cross contaminated and require joint treatment.

f) Waste treatment from plating operations should provide sufficient onsite storage capacity to allow for a minimum of 8 hours of plating operation during waste treatment shutdown periods.

g) Ventilation design as determined by the medical activity industrial hygienist must provide adequate air flow during normal and emergency conditions to ensure a safe environment for operating personnel. This is particularly crucial in plant areas that generate gases and vapors. Consider covers for large volume reactors and equalization basins.

h) Provide positive head on pump suctions.

i) Particular caution should be observed with chemical piping layout; for example, avoid entrapment areas for hydrogen peroxide that may cause valve and pipe eruption. Provide vacuum breaks in piping design to avoid undesirable back siphonage to pumps and tanks.

j) Provide adequate design of piping and equipment supports to avoid vibration that may lead to failure.

k) Provide for storage of process treatment chemicals in temperature and/or climate controlled areas as needed.

l) Consider use of pneumatically controlled valves (rather than electric) in corrosive environments.

2.7.3 Operational Factors. The following points should be considered:

a) Adequate operator training at facilities is mandatory. An O&M manual which specifically reflects the plant’s requirements is required. Conduct on-the-job training at plant startup and continue until the entire treatment process runs continuously and satisfies design effluent discharge criteria for a minimum 30-day period.

b) Prepare operation and maintenance manuals for each equipment component in the plant. Prepare a system O&M manual to integrate and demonstrate how each component relates to the system. Operation and equipment manuals should be updated after the performance demonstration period to include equipment and plant modifications. New operational requirements should be implemented during the startup or performance demonstration period.

c) Plant equipment should be operated immediately upon installation. Equipment should not be allowed to sit idle and deteriorate from lack of usage. Equipment performance should be in demonstrated compliance with specifications and testing procedures.

d) Operator work requirements should be minimized by designing treatment chemicals in liquid form to be pumped, or in powder form to be automatically fed.

e) Use of computer control systems with total manual backup should be considered for larger installations.

f) After removing solids from the units, a steam line/wand or air supply should be provided for cleaning filter press gaskets and flanges.

g) Develop contingency plans for plant shutdown and chemical spills and treatment process performance failure.

2.7.4 Equipment Selection. The following points should be considered:

a) For solids separation following chemical precipitation (particularly plating waste), parallel plate or tube separators should be evaluated. Manual or automatic means of cleaning plugged plates or tubes must be provided.

b) Plate and frame filter presses have been particularly successful in dewatering chemical sludges for direct disposal and should be used unless special circumstances dictate otherwise.

c) Electrically powered agitators are preferred over air spargers.

d) Mixer shafts should be constructed of solid corrosion-resistant materials rather than coated.

2.7.5 Material Selection. The most critical factors that have caused unfavorable conditions at industrial waste facilities operated by the Navy have been material selection and

protection from the corrosive environments. Careful selection of materials is necessary. The following points should be considered:

a) Concrete block or masonry buildings are preferred over steel to resist corrosion.

b) Exhaust and ventilation ductwork must be structurally sound. Ductwork must have the proper materials to resist corrosive fumes vented or a corrosive atmosphere on the exterior side. Roof fans and ventilators should be suitable for corrosive atmosphere of building air space.

c) Piping and conduit material should be resistant to the corrosive agents and operating conditions to which they may be exposed. Paint exposed metal that is nonresistant to corrosion with a corrosion-resistant paint. Consider the effect of a corrosive atmosphere on building interior roof and walls.

d) Tank materials (or liners) should be of proper corrosion-resistant material.

e) Materials for seals, connectors, and gaskets on piping and pumps exposed to corrosive materials should be carefully selected to avoid damage.

f) Pump housing should be corrosion resistant.

g) Provide overhead piping which carries corrosive-type materials with a corrosion-resistant sleeve and directed to a safe area to avoid safety hazards from leaky piping. Provide emergency area floor drains.

h) Proper welding specifications and materials are necessary for constructing or repairing tanks and equipment which are exposed to corrosive materials.

i) Electrical boxes should be located away from corrosive environments. If located in corrosive operating areas, they should be sealed gasket types and corrosion resistant.

j) Protect other instruments and electrical equipment that may be exposed to a corrosive environment. Locate control consoles, panel-boards, and transformers within a closed and vented control room out of any corrosive atmosphere.

k) Concrete tanks or sewers exposed to corrosive materials should be constructed of acid-resistant concrete or provided with suitable liners.

Section 3: OILY WASTEWATER COLLECTION AND TREATMENT

3.1 Objectives. Section 311(b)(3) of the FWPCA prohibits the discharge of oil in harmful quantities into or upon the navigable waters of the United States. As indicated in the Title 40 CFR Part 110, Discharge of Oil, discharges in quantities that violate applicable water quality standards and cause a visible sheen upon the water are considered harmful. Treatment of oil discharges or oily wastes is frequently required at naval installations.

3.2 Sources. Oily waste originates in numerous locations on board ships and throughout shore facilities. The largest (by volume) source is shipboard oily waste. The design criteria presented herein have been primarily developed for treatment of oily wastes from ships.

3.2.1 Pierside and Barge Collection of Shipboard Oily Waste. Wastewater collected in the bilges of ships normally contains about 1 percent oil and grease and some heavy metals and organic contaminants. This waste may not be directly discharged to public waters, and in many cases it is unsuitable for discharge to a POTW. Full treatment to direct discharge standards or pretreatment to reduce pollutants to acceptable levels for municipal sewer discharge is necessary. Bilge wastes are normally the primary influent, both in volume and contaminant concentration, to an oily waste treatment system. Occasionally, compensating ballast water is discharged from ships and barges directly overboard. As of this writing, Puget Sound Washington activities are required by the local regulatory agencies to collect compensating ballast water during ship’s refueling operations. This waste contains lower contaminant levels than bilge wastes but usually requires treatment before disposal.

3.2.2 Aircraft and Vehicle Maintenance Operations. Spills of lubricating, hydraulic, and turbine oils to building drains can occur. Route drains through oil-water separator to sanitary sewer or to industrial sewer if metal or organics removal is required. Implement oil use and recovery plans. Minimize working area for outside maintenance installations to minimize

volume of contaminated surface runoff requiring treatment. The use of high-pressure water and/or detergents for cleanup of work area is not recommended because they increase oil emulsification and inhibit oil-water separation by gravity. For spill cleanup, use dry absorbents and sweep whenever possible. Dispose of absorbents as solid waste material.

3.2.3 Aircraft Washracks and Rinse Areas. Equipment is usually cleaned with detergents, corrosion inhibitors, and other cleaning compounds by brushing and high-pressure water rinses to remove oil, dirt, and seawater. The most feasible alternative to remove free oil fraction would be pretreatment prior to discharging to the sanitary sewer. Outside areas located adjacent to runways usually employ a potable water rinse to remove salt as aircraft land. Rinse water may require treatment to prevent long-term buildup of oil and grease in the soil, which could result in contaminated surface runoff to receiving drainage systems or contaminated infiltration to groundwater supplies. Confirm treatment and groundwater monitoring requirements with regulatory agency.

3.2.4 Tank Farm Operations. The soil around large buried fuel or oil storage tanks is often dewatered by a perforated underdrain system. Fuel or oil may enter the soil by tank overflows or structural failure. It can seep into the surrounding soil and drainage system and create a potential ground water contamination problem. The movement of the fuel or oil through the soil to the drainage system is enhanced during periods of precipitation and/or the presence of a high water table. Contaminated soil should be removed and replaced with uncontaminated materials, and the drainage pipe cleaned. If not feasible, provide oily wastewater treatment system. Complexity of system will depend on required effluent quality. Provide containment facilities, such as skimming dams or diversion ponds for fuel or oil transfer areas to prevent spills from reaching surface water bodies and underground drainage systems. Containment area will require a chemical resistant, impermeable lining. Provide containment areas around storage tanks as

described in MIL-HDBK-1022. Equip fuel and oil storage tanks and dispensing facilities with covers or other control devices to minimize dispersion of hydrocarbons into the air.

New tanks should comply with Federal and state underground storage tank regulations. These regulations provide guidelines for the design, material of construction, and monitoring techniques as well as for any remedial action in case of leakage.

3.2.5 Fire Training Area. Firefighting demonstrations that require disposal of unburned fuel and/or oil, burn products, AFFF, or protein foam are routinely scheduled. Design containment area to prevent uncontrolled runoff and percolation of fuel, oil, and foam into soil or open surface drains. Refer to MIL-HDBK-1027/1, Firefighting School Facilities, for wastewater collection and treatment system design criteria. Refer to Table 2 for wastewater characteristics from fire training area.

3.2.6 Storm Water Runoff. Where feasible, segregate potentially contaminated runoff from uncontaminated runoff to minimize volume requiring treatment. Provide oily wastewater treatment facilities as required to achieve effluent quality. Suspended solids in runoff must be minimized to maximize effectiveness of the oil removal system. Sedimentation facilities could be required upstream of the oil-water separator. Use a temporary impoundment facility and a release to treatment system at a controlled rate to minimize the size of an oil-water separator.

3.2.7 Ship and Barge Deballasting Operations. For design criteria refer to MIL-HDBK-1022.

3.2.8 Other Sources. Other sources of oily wastes include aircraft machine and paint shops, fuel transfer operations, and runway operations.

a) Aircraft Machine and Paint Shops. Aircraft machine and paint shop wastes include many types of lubricating and cutting oils, hydraulic fluids, paints, paint strippers, solvents, degreasers, washdown waters, and plating wastes. Do not discharge these wastes to a building drain system. Collect in separate systems and route to oily or industrial wastewater treatment systems. Check the compatibility of wastewater mixtures and the hazardous waste nature of the mixture.

b) Fuel Transfer Operations. Spills may occur during fuel transfer operations. If possible, use dry absorbents to pick up oil and dispose of them as solid waste material. Check flash point of the spent material for possible hazardous waste characteristics.

c) Runway Operations. At airports subjected to cold weather, deicing fluids such as ethylene glycol are used to keep runways from icing over. Deicing fluids are generally washed off by rainfall or snowmelt into runway storm sewers.

3.3 Discharge Criteria. Oily wastes must be treated to comply with Federal, state, and local regulations. The effluent from the oily waste treatment plant may be discharged to either navigable waters or to a POTW. The NPDES permit determines the effluent quality requirements for discharge to navigable waters. Effluent quality requirements for discharge to POTWs are determined by local and municipal authorities and, therefore, may vary from place to place. The effluent quality requirements most typically encountered, and for which treatment system design criteria are developed herein, are as follows:

Parameter	Discharge to Navigable Waters	Discharge to POTW
Oil and Grease	ND-10 mg/L	50-300 mg/L
Suspended Solids	ND-15 mg/L	100-500 mg/L
pH	6-9	6-9

Note: ND = Non Detect

Regional and local authorities may impose additional effluent quality requirements. These requirements may restrict heavy metals and organic pollutants. In such cases, perform treatability studies to determine process additions or modifications necessary to the standard treatment system.

3.4 Point Source Control. Investigate point source controls to eliminate or reduce wastewater volume and contaminant concentrations. It may be more economical to implement point source controls rather than provide a wastewater treatment system. Consider point source control techniques such as process change or modification, material recovery, wastewater segregation, and water reuse.

3.4.1 Segregation and Recovery. Consider segregation of oily wastewater streams based on intended use of reclaimed oil; for example, lubricating oils may be re-refined instead of incinerated. Do not mix high flash oil with low flash oil or halogenated solvents with nonhalogenated oil.

3.4.2 Process Change. Consider use of dry absorbents to minimize oils reaching a sewer. Dry absorbents may be collected and disposed of with solid waste materials. Evaluate flash point of spent absorbent for possible hazardous waste designation under RCRA guidelines.

3.5 Disposal of Oil. Oils and oily sludges obtained from treatment or pretreatment systems may be disposed of by several methods. These are reuse/recovery, incineration, selling by Defense Reutilization and Marketing Office (DRMO), waste hauler, landfill, and land disposal. Final disposal options must be evaluated concurrently with oil-water separation methods and environmental requirements to establish the most cost-effective total system.

3.5.1 Reuse/Recovery. Consider processes that will enable reusing separated oils for subsequent use. Additional water removal from gravity or flotation units may be necessary to

utilize oils for combustion. Use of recovered oil for combustion with subsequent recovery of heat is recommended where justified.

3.5.2 Incineration. When other disposal methods are not practical or where toxic materials are contained in oily sludges, incineration should be considered. Determine air pollution control requirements from the controlling regulatory agency.

3.5.3 Waste Hauler. Refer to paragraph 2.6.1.6c.

3.5.4 Landfill or Land Disposal. Dewatered oily sludge may be disposed of in a dedicated landfill site or in a landfill with other solid wastes. Oily sludge, with or without domestic wastewater sludge, can also be incorporated into the soil in a land application system. The landfill or land disposal site must be approved to accept the sludge.

Oily sludge may be considered a hazardous waste based on RCRA criteria for flammability or the TCLP. Determine hazardous waste nature by TCLP test results and ignition point. Contact state regulatory agency for local handling, transport, and storage requirements.

3.6 Emergency Containment and Cleanup. Process and treatment operations at Navy installations should be controlled to eliminate spills of oil to surface and ground waters. Equipment and procedures to effectively contain and remove accidental spills should be established as a part of the oily waste collection and treatment system. Refer to OPNAVINST 5090.1 for overall guidance on responsibilities and management for oil spills.

3.7 Oily Wastewater Characteristics

3.7.1 General. Establish wastewater flow rate and contaminant concentrations, when possible, through direct measurements and sampling. Follow procedures in NAVFACINST 4862.5 when conducting Preliminary Engineering Studies for

industrial wastes. Use existing installations to forecast conditions for facilities to be constructed. Exercise caution with regard to the similarity of oily wastewater sources and collection systems. Length and configuration of collection system, liquid transport velocities, and associated appurtenances (pumping) can significantly influence wastewater characteristics.

3.7.2 Characteristics. The types and concentrations of contaminants in oily wastes from different sources will vary greatly. The type of contaminant may be one or a combination of the following: various oils such as hydraulic, turbine, lubricating, cutting, and motor oil (which may be in the form of free, dispersed, emulsified, or dissolved oil); gasoline; heavy metals; emulsifying agents; solvents; oily sludge; seawater; and particulate matter (flotable and settleable) such as sand, soil, gravel, and paint skins.

Based on available data from analyses of shipboard discharges and composite influents to oily waste treatment systems, a general characterization of physical and chemical properties of untreated oily waste is as follows:

	Concentration (mg/L)	
Characteristic	Average	Peak
Oil and grease	200 to 2,000	10,000 to 100,000
Suspended solids	50 to 500	5,000
pH	6 to 8 units	--
Copper	0.02 to 2	5 to 10
Lead	0.03 to 0.1	0.5
Mercury	Negligible	--
Nickel	0.01 to 0.2	0.5
Zinc	0.1 to 1	2
Phenolics	0.01 to 0.5	2
Sulfides	0 to 80	--

In addition, oily wastewater and compensating ballast water from ships contain a high concentration of dissolved solids. This can create operational, maintenance, and materials problems for the treatment and collection systems. Principal

problems are process upsets, corrosion, and scale formation. Variations in wastewater flow rates occur due to discharge rates of different ship types.

3.7.3 Flows. Determine frequency and duration of maximum and average flows for ship-generated oily wastes by using the methods described in paragraph 3.8. Determine flow characteristics of other oily wastes by using the methods described in Section 4.

3.7.4 Sampling. Collect, preserve, and analyze representative samples to determine the physical and chemical characteristics and concentrations. Conduct sampling program concurrently with a flow measuring program. Oily wastewater sources that are highly variable with regard to volume and constituent concentrations should be sampled continuously using flow weighted composites (refer to guidelines for sampling in EPA PB 259146).

3.7.5 Analyses. The basic oily wastewater characterization program should include the minimum and maximum concentrations for the following: total solids, suspended solids, total and dissolved oil and grease (or petroleum hydrocarbon), dissolved organics, flash point, sulfides, specific gravity, temperature, total halogens, and Btu value of the oil. Include the range for pH and the presence of corrosive materials such as solvents and acids for proper selection of construction materials. Perform metals analyses if they are potentially present in the oily wastewater system.

3.7.6 Treatability. Use benchscale and pilot plant studies as required to determine treatment processes that will provide the required effluent quality. Use benchscale experiments to determine design criteria for chemical dosage, optimum pH, suspended solids settling rate, temperature effects, emulsion breaking, oil separation, sludge generation, and allowable overflow rate. Refer to Process Design Techniques for Industrial Waste Treatment by Adams and Eckenfelder for treatability test procedures. When considering gravity separation only, use column settling test at sample collection

site, if practical, and immediately after collecting sample. Avoid column agitation and sunlight during test period. If chemical addition is required, use jar test to select optimum conditions and column test to simulate gravity separation. Compare test results with most stringent applicable effluent quality regulations. Refer to NAVFACINST 4862.5 for treatability study guidance.

3.8 Collection and Transfer

3.8.1 Ship Oily Wastewater Generation

3.8.1.1 Ships. Collection of ship's oily wastewater should be available at every berth. The collection may take the form of truck or barge transfer or facility pipelines. See specific guidance in MIL-HDBK-1025/2, Dockside Utilities for Ship Service. Coordinate with environmental requirements to determine the most life-cycle cost efficient, environmentally acceptable collection system.

a) Sources. Primary sources of ship-generated oily wastewater are bilges, oily waste holding tanks for collecting lubricating oils and water contaminated fuel, condensate lines, and tank cleaning water. Sonar dome pumping water is not normally collected as part of the oily waste collection system. The oil content in the bilge water normally varies from 0.01% (100 ppm) to 1.0% (10,000 ppm). The rest is mostly saltwater of unknown chloride content. The oil content of ship discharges overboard is limited to 20 ppm or less within 12 nautical miles of nearest land. In restricted ports, ballast water can be discharged from most ships (other than tankers) through large diameter piping directly overboard to a ship waste oily barges (SWOB) or YON. Compensating ballast water can also be discharged directly to a pier collection system providing the liquid can gravity flow (from ship to pier connection) and back pressure kept to a minimum. The Navy policy on classification of oily wastewater is that the oily waste and waste oil (OWWO) become a waste only upon removal from the ship. Generally bilge water should be treated like any other waste. At the time of

publishing, the states of California and New Jersey consider bilge water as a hazardous waste. Some states may also require the collection of compensating ballast water when refueling occur within the restricted waters (in port) of the United States. Refer to MIL-HDBK-1022 for guidance on the collection and treatment of ballast water.

b) Ship-to-Shore Oily Wastewater Transfer. In 1970, the U.S. Navy established a program to limit the discharge of oily waste from Navy ships and crafts that paralleled international, federal, state, and local regulations and agreements concerning Oil Pollution Abatement (OPA). DOD Directive 6050.15 prescribes operational standards for ships and delegates implementation responsibilities. The Navy previously collected oily waste via a floating oil water separator called a “donut.” However, donuts are now prohibited for environmental reasons. Various OPA equipment have been installed on ships in recent years to minimize oily waste pollutant discharges. Most ships have oil water separators, waste oil tanks (WOTs), oily waste holding tanks (OWHTs), and oily waste transfer pumps (OWTPs). A brief description of these equipment is presented below:

(1) An OWHT usually can contain the oily waste generated in one-half day by a ship in auxiliary mode. It holds at least 1,000 gallons.

(2) A WOT usually can contain the oily waste separated during a 60-day mission.

(3) A OWTP is normally a segregated electric-driven pump that pumps bilge water to the OWHT and waste oil or oily waste to shore facilities. Some older ships use rotary vane pumps, but the newer ones use sliding shoe pumps. Pumps discharge at least at 10 psi pressure at the lowest weather deck of the ship. See Table 11 for discharge pressures for each class. These pumps normally have capacity of off-loading the OWHT in approximately 1 to 2 hours. On aircraft carriers, the off-loading time may take up to 4 hours.

(4) Details of these systems are given in Oil Pollution Abatement Systems on Surface Ships, S9593—BF-DOT-010, Naval Sea Systems Command, 15 Dec 1987. Transfer is accomplished via standard ship deck discharge-risers connected by 2.5-inch (65-mm) flexible hose to standard pier risers (see Figure 8). A ship nested outboard normally will lay hoses across the deck of the inboard ship.

3.8.1.2 Ship Oily Wastewater Flows. Treatment systems should be sized for the following flows. Ship bilge daily flow varies with the class of ship, shipboard operations, and condition of the ship's mechanical equipment. The three measures of ship's flow are average (Q_{ave}), peak (Q_{peak}), and additional from compensating fuel tanks (Q_{comp}). Estimated values for the ship flow (without the use of onboard OWS) for each ship class is listed on Table 12. These flows are used in various combinations (depending on facility size) to estimate the total daily oily waste flow (Q_{daily}) from a pier. Q_{comp} is determined based on the fueling capability of the facility. If no fuel capability exists on the pier, then this quantity is zero. Fuel capability may be in the form of piping, trucks or barges. If fueling capability exists, then this quantity is equal to the maximum fueling rate for one day. Q_{daily} is used to estimate ship utility charges and shoreside oily waste treatment plant capacity, operating costs, and operating schedule. Plants should normally be assumed to operate on a 40-hour work week. The size of the pier facility depends on the historical and pier berthing plan. Facility size and Q_{daily} are determined as per the following subparagraphs.

Table 11
Ship Bilge Pump Data

Ship Class[1]	Number of Oily Waste Transfer Pumps (OWTPs)	Capacity of Each Pump gpm(L/s)	Rated Pump Discharge Pressure[2] psig(kPa)	Design Deck Riser Pressure[3] psig(kPa)	Deck Riser Height above Waterline ft(m)
CV	2	200(12.6)	125(861.8)	80(551.6)	28(8.5)
CVN	2	200(12.6)			
CG 16	2	50(3.2)	40(275.8)	15(103.4)	22(6.7)
CG 47					
CGN 36	4	54(3.4)	110(758.4)	22(151.7)	21(6.4)
CGN 38					
DD 931	2	50(3.2)	60(413.7)	39(268.9)	11(3.4)
DD 963	2	90(5.7)	110(758.4)	33(227.5)	18(5.5)
DDG 51	2	50(3.2)	50(344.7)		
DDG 993	2	90(5.7)	110(758.4)	33(227.5)	18(5.5)
FF 1052	1	50(3.2)	60(413.7)	37(255.1)	13(4.0)
FFG 1	2	50(3.2)	60(413.7)	35(241.3)	17(5.2)
FFG 7	1	15(0.9)			
SSN 21	2	280(17.7)	(C)[4]	(C)	
SSN 637	1	230(14.5)	(C)	(C)	
SSN 688	1	230(14.5)	(C)	(C)	
SSBN 726	1	230(14.5)	(C)	(C)	
PHM					
LHA	5	4@ 18(1.1) 1@ 54(3.4)	110(758.4)		
LHD	3	54(3.4)	110(758.4)		
LPD 4	2	1@ 18(1.1) 1@ 90(5.7)	110(758.4)	30(206.8)	34(10.4)
LPD 17	1	54(3.4)	110(758.4)		
LPH	2	100(6.3)	60(413.7)	27(186.2)	31(9.4)
LKA	1	50(3.2)	50(344.7)	16(110.3)	40(12.2)
LSD 33	1	100(6.3)	60(413.7)	36(248.2)	24(7.3)
LSD 41					
LST	2	50(3.2)	50(344.7)	25(172.4)	28(8.5)
LCC	1	100(6.3)	50(344.7)	23(158.6)	22(6.7)
AE-21	1	50(3.2)	50(344.7)	24(165.5)	20(6.1)
AE-26	2	1@ 50(3.2) 1@ 15(0.9)	60(413.7)	35(241.3)	20(6.1)
AF	1	100(6.3)	60(413.7)	30(206.8)	25(7.6)
AO 143					
AO 177	2	100(6.3)	50(344.7)	19(131.0)	25(7.6)
AOE 1	1	100(6.3)	50(344.7)	13(89.6)	32(9.8)
AOE 6					

Table 11 (Continued)
Ship Bilge Pump Data

Ship Class[1]	Number of Oily Waste Transfer Pumps (OWTPs)	Capacity of Each Pump gpm(L/s)	Rated Pump Discharge Pressure[2] psig(kPa)	Design Deck Riser Pressure[3] psig(kPa)	Deck Riser Height above Waterline ft(m)
AOR 1	1	100(6.3)	60(413.7)	29(199.9)	26(7.9)
MSO	2	15(0.9)	50(344.7)	35(241.3)	9(2.7)
MCM					
MCS					
MHC					
PC					
ACS					
AD-14	1	100(6.3)	60(413.7)	32(220.6)	26(7.9)
AD-37					
AD-41					
AR	1	100(6.3)	60(413.7)	33(227.5)	22(6.7)
ARS 6	2	15(0.9)	50(344.7)	29(199.9)	22(6.7)
ARS 50					
AS 31	2	100(6.3)	60(413.7)		
AS 33	2	100(6.3)	60(413.7)		
AS 40					
ASR					
ATS	1	15(0.9)	50(344.7)	33(227.5)	12(3.7)
T-AFS	2	50(3.2) 15(0.9)	60(413.7)	31(213.7)	31(9.4)
T-AG 193	1	50(3.2)	50(344.7)	18(124.1)	33(10.0)
T-AGM	2	600(37.9)	125(861.8)		22(6.7)
T-AGOS 1	1	10(0.6)	52(358.5)		15(4.6)
T-AGOS 19	2	20(1.3)	30(206.8)		
T-AGOS 23	2	18(1.1)	110(758.4)		30(9.1)
T-AGS 51	2	20(1.3)	50(344.7)		14(4.3)
T-AGS 60	1	20(1.3)	50(344.7)	10(68.9)	14(4.3)
T-AH (SYS 1)	2	425(26.8)	65(448.2)		40(12.2)
T-AH (SYS 2)	2	21(1.3)	50(344.7)		40(12.2)
T-AKR 287	2	110(6.9) 45(2.8)	64(441.3) 63(434.4)		30(9.1)
T-AKR 290	1	250(15.8)	100(689.5)		
T-AKR 295	2	50(3.2)			55(16.8)
T-AKR 296	2	50(3.2)		10(68.9)	55(16.8)

Table 11 (Continued)
Ship Bilge Pump Data

Ship Class[1]	Number of Oily Waste Transfer Pumps (OWTPs)	Capacity of Each Pump gpm(L/s)	Rated Pump Discharge Pressure[2] psig(kPa)	Design Deck Riser Pressure[3] psig(kPa)	Deck Riser Height above Waterline ft(m)
T-AKR 300	2	50(3.2)			55(16.8)
T-AKR 310	2	50(3.2)	60(413.7)		55(16.8)
T-AO 187	1	100(6.3)	60(413.7)	30(206.8)	22(6.7)
T-ATF 166	1	15(0.9)	60(413.7)	44(303.4)	9(2.7)
T-ARC	2	420(26.5)	25(172.4)		
AVB	1	30(1.9)	60(413.7)		30(9.1)

[1]Major Surface Ship Classes which will be generating oily waste to be processed ashore. Refer to SECNAVINST 5030.1, Classification of Naval Ships and Craft, for description of other classes.
[2]Rated discharge pressure at the flow capacity listed. Pump recirculating relief valve limits discharge pressure at zero flow to 125 percent of rated discharge pressure listed.
[3]Estimate of ship deck riser pressure for shoreside design.
[4](C) indicates that information is classified. Use 3-inch piping for laterals.

Table 12
Estimated Daily Oily Waste Flows for Facility Design

Ship Class	Estimated Daily Peak Oily Waste Flow, Q_{peak} gpd(L/day)	Estimated Daily Average Oily Waste Flow, Q_{ave} gpd(L/day)
CV	80,000(302,832)	50,000(189,270)
CVN	35,000(132,489)	35,000(132,489)
CG 16	12,000(45,425)	3,000(11,356)
CG 47	12,000(45,425)	3,000(11,356)
CGN 36	2,500(9,464)	1,750(6,624)
CGN 38	2,500(9,464)	1,750(6,624)
DD 931	3,500(13,249)	1,000(3,785)
DD 963	6,750(25,551)	1,500(5,678)
DDG 51	12,000(45,425)	3,000(11,356)
DDG 993	3,500(13,249)	1,000(3,785)
FF 1052	3,500(13,249)	1,000(3,785)
FFG 1	3,500(13,249)	1,000(3,785)
FFG 7	6,750(25,551)	1,500(5,678)
SSN 21	500(1,893)	250(946)
SSN 637	500(1,893)	250(946)
SSN 688	500(1,893)	250(946)
SSBN 726	500(1,893)	250(946)
PHM	100(379)	50(189)
LHA	21,000(79,493)	6,400(24,227)
LHD	21,000(79,493)	6,400(24,227)
LPD 4	21,000(79,493)	6,400(24,227)
LPD 17	21,000(79,493)	6,400(24,227)
LPH	21,000(79,493)	6,400(24,227)
LKA	21,000(79,493)	6,400(24,227)
LSD 33	4,800(18,170)	2,700(10,221)
LSD 41	4,800(18,170)	2,700(10,221)
LST	4,000(15,142)	1,000(3,785)
LCC	21,000(79,493)	6,400(24,227)
AE-21	4,800(18,170)	2,700(10,221)
AE-26	4,800(18,170)	2,700(10,221)
AF	15,000(56,781)	3,500(13,249)
AO 143	21,000(79,493)	11,250(42,586)
AO 177	21,000(79,493)	11,250(42,586)
AOE 1	21,000(79,493)	11,250(42,586)
AOE 6	21,000(79,493)	11,250(42,586)
AOR 1	21,000(79,493)	11,250(42,586)

Table 12 (Continued)
Estimated Daily Oily Waste Flows for Facility Design

Ship Class	Estimated Daily Peak Oily Waste Flow, Q_{peak} gpd(L/day)	Estimated Daily Average Oily Waste Flow, Q_{ave} gpd(L/day)
MSO	100(379)	50(189)
MCM	100(379)	50(189)
MHC	100(379)	50(189)
PC	100(379)	50(189)
ACS		
AD-14	15,000(56,781)	10,000(37,854)
AD-37	15,000(56,781)	10,000(37,854)
AD-41	15,000(56,781)	10,000(37,854)
AR	15,000(56,781)	3,500(13,249)
ARS 6	500(1,893)	275(1,041)
ARS 50	500(1,893)	275(1,041)
AS 31	15,000(56,781)	10,000(37,854)
AS 33	15,000(56,781)	10,000(37,854)
AS 40	15,000(56,781)	10,000(37,854)
ASR	100(379)	100(379)
ATS	3,500(13,249)	3,250(12,303)
T-AFS		
T-AG 193		
T-AGM		1,000(3,785)
T-AGOR		
T-AGOS 1	100(379)	50(189)
T-AGOS 19	100(379)	50(189)
T-AGOS 23	100(379)	50(189)
T-AGS		
T-AH		
T-AK		
T-AKR 7		
T-AKR 287		
T-AKR 300		
T-AO 187	21,000(79,493)	11,250(42,586)
T-AOG 77		
T-AOT		
T-ATF 166		
T-ARC		
AVB		

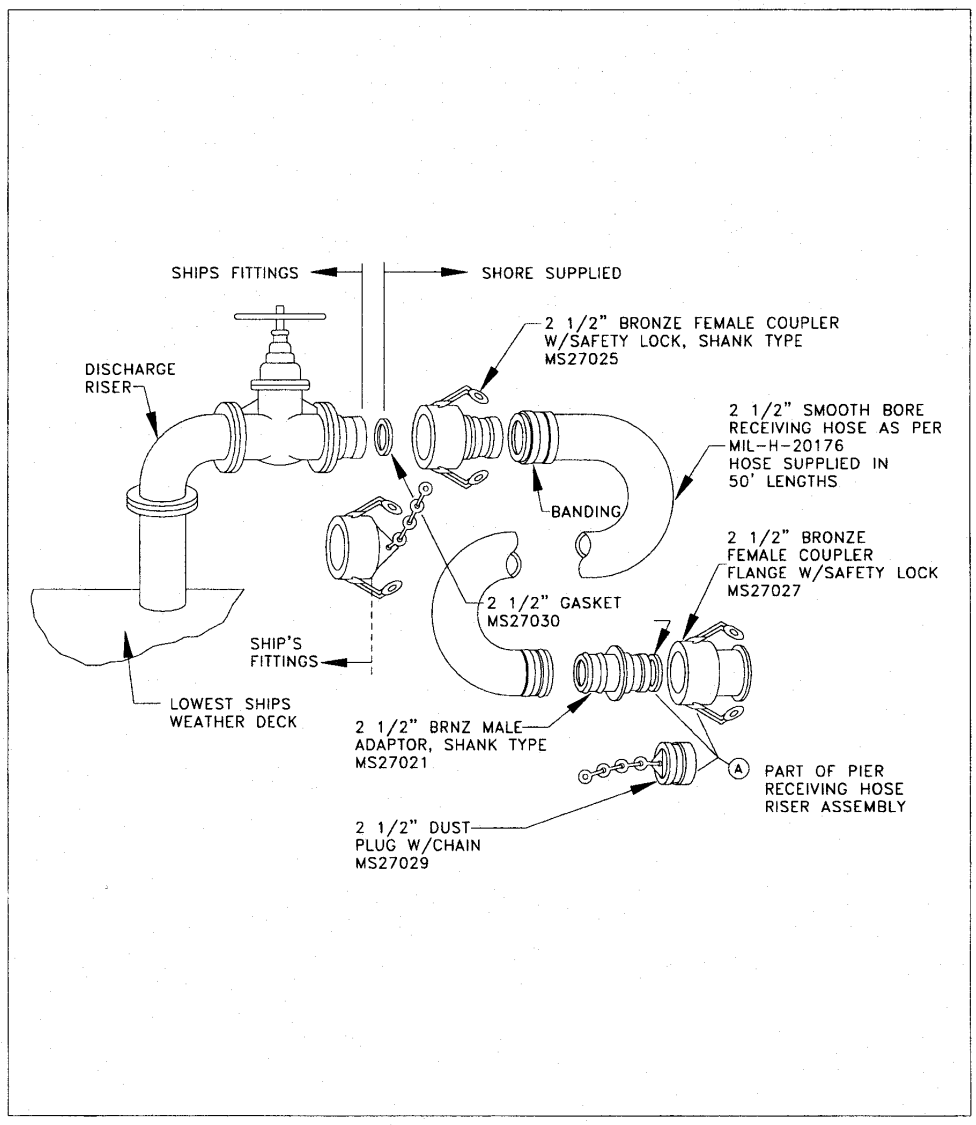

Figure 8
Ship-to-Shore Oily Waste Hose Connection

a) Small Facilities. Defined as pier facilities with fewer than 15 homeported vessels. Q_{daily} is determined by Equation 3:

EQUATION: (3)

$$Q_{daily} = Q_{comp} + \sum_{n=1}^{N} Q_{peak}$$

where

Q_{daily} = design daily flow for facility, gpd(L/day)
Q_{comp} = maximum fueling flow per day from shore to ships, gpd(L/day)
N = number of ships at piers during maximum holiday berthing or special peacetime exercise
Q_{peak} = peak daily flow from each ship, gpd(L/day)(see Table 12)

b) Large Facilities. Defined as pier facilities where more than 15 ships are homeported. Q_{daily} is determined by Equation 4.

EQUATION: (4)

$$Q_{daily} = Q_{comp} + (1.33 \times \sum_{n=1}^{M} Q_{average})$$

where

Q_{daily} = design daily flow for facility, gpd(L/day)
Q_{comp} = maximum fueling flow per day from shore to ships, gpd(L/day)
M = number of ships at piers during average daily berthing condition.
Q_{ave} = average daily flow from each ship, gpd(L/day) (see Table 12)

Each facility should be capable of accommodating the maximum daily flow ($Q_{maximum}$) using overtime during holiday operations. $Q_{maximum}$ is determined by Equation 5.

EQUATION: (5)

$$Q_{maximum} = Q_{comp} + \sum_{n=1}^{N} Q_{avg}$$

where

$Q_{maximum}$ = maximum daily flow during holiday berthing, gpd(L/day)
Q_{comp} = maximum fueling flow per day from shore to ships, gpd(L/day)
N = number of ships at piers during maximum holiday berthing or special peacetime exercise
Q_{ave} = average daily flow from each ship, gpd(L/day) (see Table 11)

c) Design Flow for Pier Oily Waste. Flow estimate for design of pier main and laterals and pump station capacity is determined as follows. (See Table 11 for ship's bilge pump data.)

(1) Design flow for pier main is determined by Equation 6:

EQUATION: (6)

$$Q_{main} = 0.31 \sum_{i=1}^{S} (n_i)(q_i)$$

where

Q_{main} = design daily flow for pier main, gpm (L/s)
S = maximum number of ships at pier during holiday berthing condition, use ship mix that produces largest daily flow

q_i = discharge rate from each OWTP (assume one pump per riser), gpm(L/s) (see Table 11)
n_i = total number of OWTP connected to same pier pressure main

(2) Design flow for pier laterals is determined by Equation 7:

EQUATION: (7)

$$Q_{lateral} = 0.31 \sum_{i=1}^{P} (n_i)(q_i)$$

where

$Q_{lateral}$ = design daily flow for pier lateral, gpm(L/s)
P = maximum number of ships connected to same lateral during holiday berthing condition, use ship mix that produces largest daily flow
q_i = discharge rate from each OWTP (assume one pump per riser), gpm(L/s) (see Table 11)
n_i = total number of OWTP connected to same pier pressure main

Total design flows from multiple parallel piers or multiple parallel pier mains on a single pier are assumed to be additive.

3.8.2 Shoreside Collection Systems

3.8.2.1 General. Lay out the system to segregate oily and non-oily wastewater sources to minimize oil-water separator hydraulic loading, minimize emulsification, and maximize oil and grease concentration. Combine similar wastewaters and route to most efficient treatment processes.

3.8.2.2 Collection System Layout. The collection system consists of a 6-inch (150-mm)(minimum) pier pressure main with 4-inch (100-mm)(minimum) pressure laterals manifold to main. Main may be laid in center or alongside of pier. Facilities

berthing only submarines or MSO ships may use 3-inch lateral. Space lateral and pier riser at 150 feet (46 m). This relatively close spacing facilitates flexible berthing configurations. Mission change frequently and flexibility should be incorporated. Hose riser assemblies need not be provided at the end of piers unless specifically required by the activity. Use dual hose receivers to provide capability for nesting ships. Nesting may occur during major exercises and holidays and during periods when nearby berth are down because of damage or repair. Provide containment according to Title 33 CFR Part 154.530 (U.S. Coast Guard regulations). See Figure 9 for pier receiving hose riser assembly connection.

Consider the following when laying out a pier collection pipeline:

a) Ships of same class type often berth together.

b) Locate a riser at the pier end for use by oil SWOB or service craft.

c) Install valves at head of each pier to allow for isolation in case of pier pipeline damage.

d) Allow for minimum slope toward free discharge to prevent liquid stagnation and freezing.

e) Use a minimum fluid velocity that will prevent settling of suspended solids and minimize emulsification.

3.8.2.3 Pipe Materials. Specification of oily waste collection piping should include:

a) Minimum operating pressure of 150 psig (1,034 kPa).

b) Use mechanical joint, lined ductile iron for exposed locations where high impact resistance is important. Support exposed pipe per manufacturer's recommendations. In other exposed locations, for superior corrosion resistance, consider thermoplastic (high density polyethylene) pressure pipe with butt fusion joints. Plastic piping on pier and wharf systems should be protected from impact of floating debris and

other hazards by placement in a specially designed utility trench. For buried lines, apply general sewer pipe selection guidelines.

c) Cathodic protection. Refer to MIL-HDBK-1004/6, Lighting and Cathodic Protection.

3.8.2.4 Special Considerations

a) Freeze protection. For design criteria in cold regions, refer to MIL-HDBK-1025/2.

b) Cleanouts. Provide cleanouts at junctions, directional changes, end of pipe run, and every 400 feet (122 m) of continuous runs.

c) For thrust support, hanger sizing, and spacing, consult manufacturer's design manual. Install pipelines inboard of pier fendering systems or preferably in utility tunnels. Protect pipelines from damage from below due to tide-carried debris. Consider composite type hanger system for increased durability in the marine environment.

d) Piping, manholes, and pump wells need not be double-walled or have secondary containment unless required by local regulations. Check local regulatory agencies for requirements.

3.8.3 Pressurized Pier Collection System. Use pumping only when a gravity system cannot serve hydraulically, such as for wastewater collection lines at piers. For those pumping systems:

a) Locate pumps as close to oily wastewater source as possible to maximize detention time between pumping and treatment and minimize impact of mechanical emulsification; or, as an alternative, use equalization facility. If equalization is employed, avoid detention times that may result in odor and gas production. Use vapor controls as required by applicable environmental regulations.

b) Use reciprocating positive displacement or screw pumps to transfer oily wastewater to treatment unit or equalization facility. Maximize size of wet well and select a number of pumps and an operating schedule to minimize surge effect of pump off-on cycle on downstream oil-water separators. Consider variable speed drives on transfer pumps.

c) If rotary displacement or centrifugal pump is used, design for low speed (≤900 rpm) to minimize mechanical emulsification.

(1) Maximize size of wet well and select the number of pumps and an operating schedule to minimize surge effect of pump off-on cycle on downstream oil-water separators.

(2) Consider the use of a pump control valve and a surge tank with control orifice to throttle discharge to oil-water separator. Consider variable speed drives on transfer pumps.

3.8.4 Gravity Flow Collection System. Collection piping should be sized for the following flows. Procedures for design of ship oily waste collection pipelines are based on Q_{main} and $Q_{lateral}$. The design objectives are to determine the diameter of pier laterals and the pier main. The design procedure is as follows:

a) Facility Daily Flow. For design purposes, determine if the activity is a "small" or "large" facility. Determine the number and classes of ships present during maximum holiday berthing and average daily berthing. Determine Q_{daily} by Equation 3 or 4. Determine $Q_{maximum}$ by Equation 5 for large facilities.

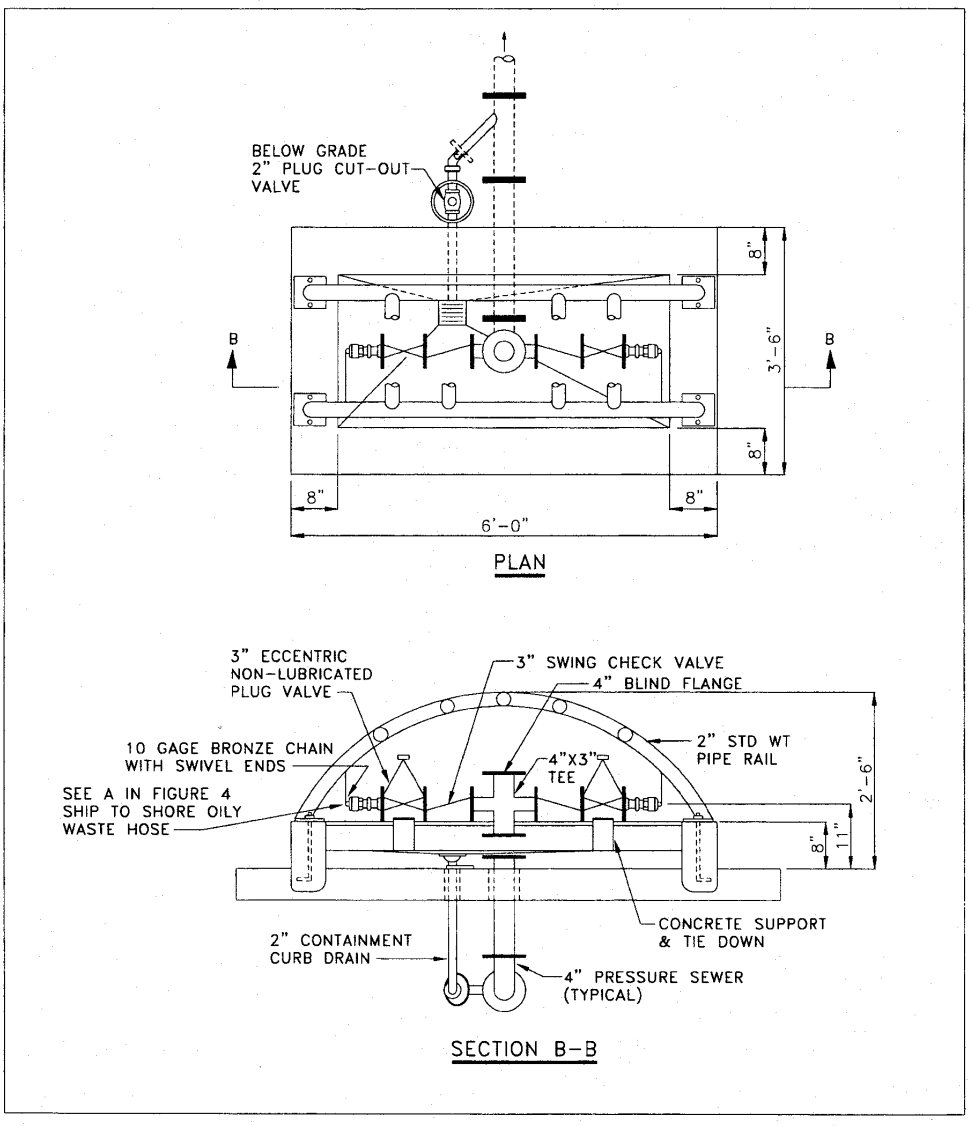

Figure 9
Pier Receiving Hose Riser Assembly

b) Sizing of Pier Main and Laterals. Determine length of pier main, pier riser elevation, deck riser elevation, and ship discharge pressure for each ship class berthed at pier. Determine the diameter of the pier main for Q_{main} flow rate at design velocity of 2 fps (0.6 m/s) for gravity system. Maintain pipe velocity less than scouring velocity recommended by pipe manufacturer. The minimum velocity will be zero since flow is intermittent. Pressurized systems should be sloped to drain to prevent freezing, fluid stagnation, and for cleaning purposes.

(1) Calculate the friction loss in the pier main at the Q_{main} flow rate using Equation 8 for flow of marine diesel fuel with viscosity at lowest expected ambient temperature. (Note: Equation first appears in English (IP), then metric (SI)). Determine design viscosity from Figure 10. Assume H_m occurs at each main-lateral intersection as a back pressure against berthed ship's bilge pumps.

EQUATION (IP): $$H_m = [f(L/D)(Q_{main}/D_{main}^2)^2]/g \qquad (8)$$

or

EQUATION (SI): $$H_m = [f(L/D)(Q_{main}/D_{main}^2)^2/g] \; [79,217]$$

where

H_m	=	head loss in pier main, ft (kPa)
f	=	Darcy-Weisbach friction factor. See Figure IIIA-3 in Engineering Data Book by the Hydraulic Institute
L	=	length of pier main from pier end to free discharge point, ft (m)
D_{main}	=	pier main diameter, in. (cm)
g	=	32.2 fps^2 (9.81 m/s^2)

(2) Calculate the maximum $Q_{lateral}$ for all ship types at maximum holiday berthing plan. Determine the diameter of the pier lateral at maximum $Q_{lateral}$ flow rate at design velocity of 5 to 7 fps (1.5 to 2.1 m/s). Maintain velocity less than the maximum scouring velocity recommended by pipe manufacturer.

c) Head Loss Determination. Calculate the head loss across the pier riser assembly (H_r), the lateral (H_l), and the lateral-main intersection (H_{lm}) based on maximum $Q_{lateral}$ flow rate and design viscosity using Equations 9, 10, and 11, respectively. See Figure 11 for design nomenclature.

EQUATION (IP): $H_r = [K(Q_{lateral}/D^2)^2/2g][0.1669]$ (9)

or

EQUATION (SI): $H_r = [K(Q_{lateral}/D^2)^2/2g][1586.7]$

where

H_r = head loss across pier riser assembly, ft(kPa)
D = lateral diameter, in. (mm)
$Q_{lateral}$ = as per Equation 7, gpm(L/s)
g = 32.2 fps^2 (9.81 m/s^2)
K = head loss coefficients for pier riser assembly. See Figure 8 for description of fittings in pier riser assembly.

EQUATION (IP): $H_l = [f(L/D)(Q_{lateral}/ D^2)^2] /g$ (10)

or

EQUATION (SI): $H_l = [f(L/D)(Q_{lateral}/D^2)^2/g]\ [79,217]$

where

H_l = head loss through lateral from pier riser to lateral/main intersection, ft (kPa)
L = length of lateral from pier riser to main, ft (m)

EQUATION (IP): $H_{lm} = [K(Q_{lateral}/D^2)^2/2g][0.1669]$ (11)

or

EQUATION (SI): $H_{lm} = [K(Q_{lateral}/D^2)^2/2g][1,586.7]$

where

H_{lm} = head loss through total hose length from ship deck riser to pier riser, ft (kPa)
K = loss coefficient for fitting at lateral/main intersection

For each ship in the berthing plan, determine the number of 50-foot (15.2-m) hose lengths and total hose length required to reach from the inboard ship deck discharge riser to the pier riser. Determine the head loss through the hose lengths by Equation 12.

EQUATION (IP): $H_h = (f[L/D][Q_{bilge}/D^2]^2)/g$ (12)

or

EQUATION (SI): $H_h = [(f[L/D][Q_{bilge}/D^2]^2)/g]\ [79,217]$

where

H_h = head loss through total hose length from ship deck riser to pier riser, ft (kPa)
L = total hose length from ship deck riser to pier riser, ft (m)
Q_{bilge} = flow rate of one bilge pump, gpm (L/s) (see Table 11)
D = diameter of oily waste transfer hose, in. (mm)

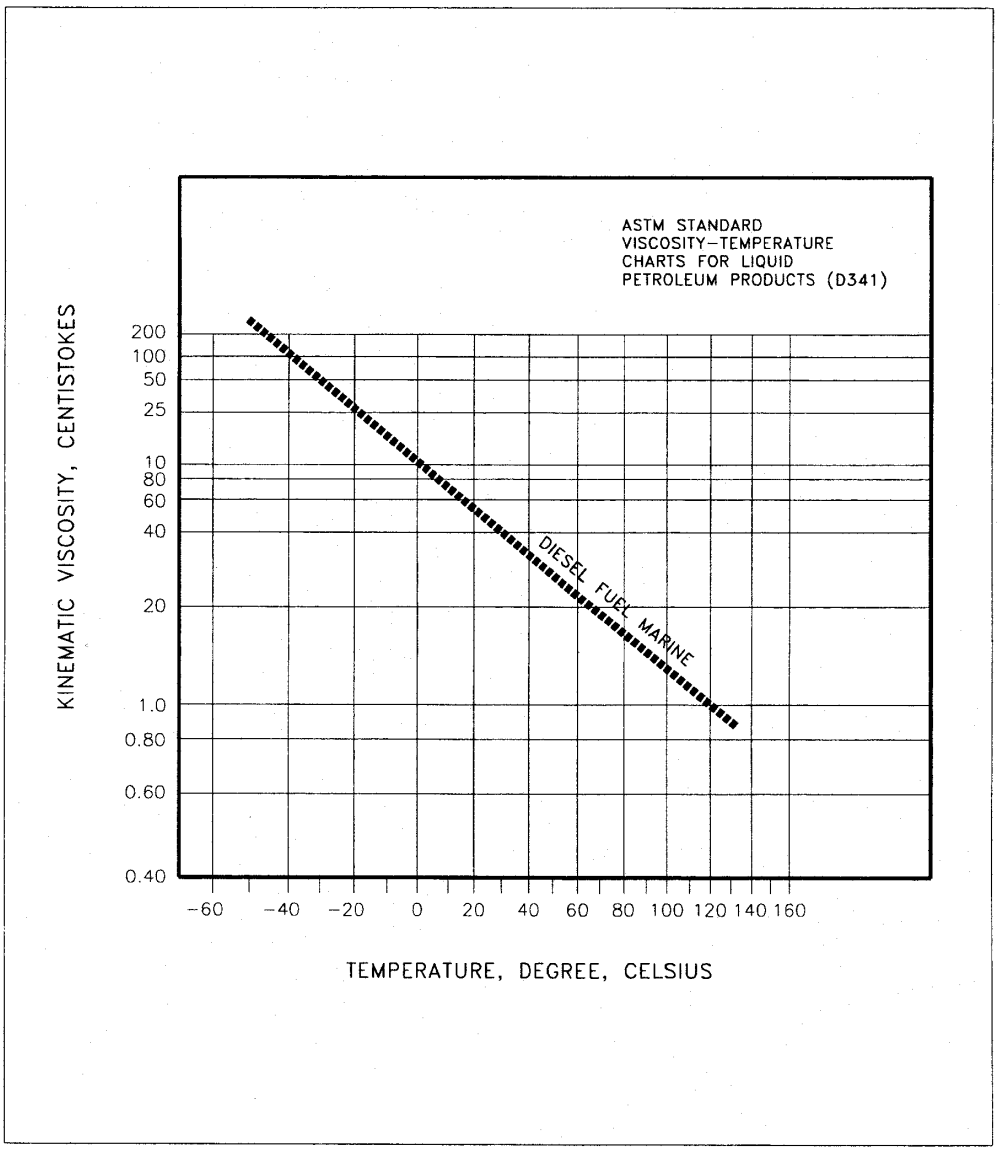

Figure 10
Viscosity-Temperature Relationship for Marine Diesel Fuel

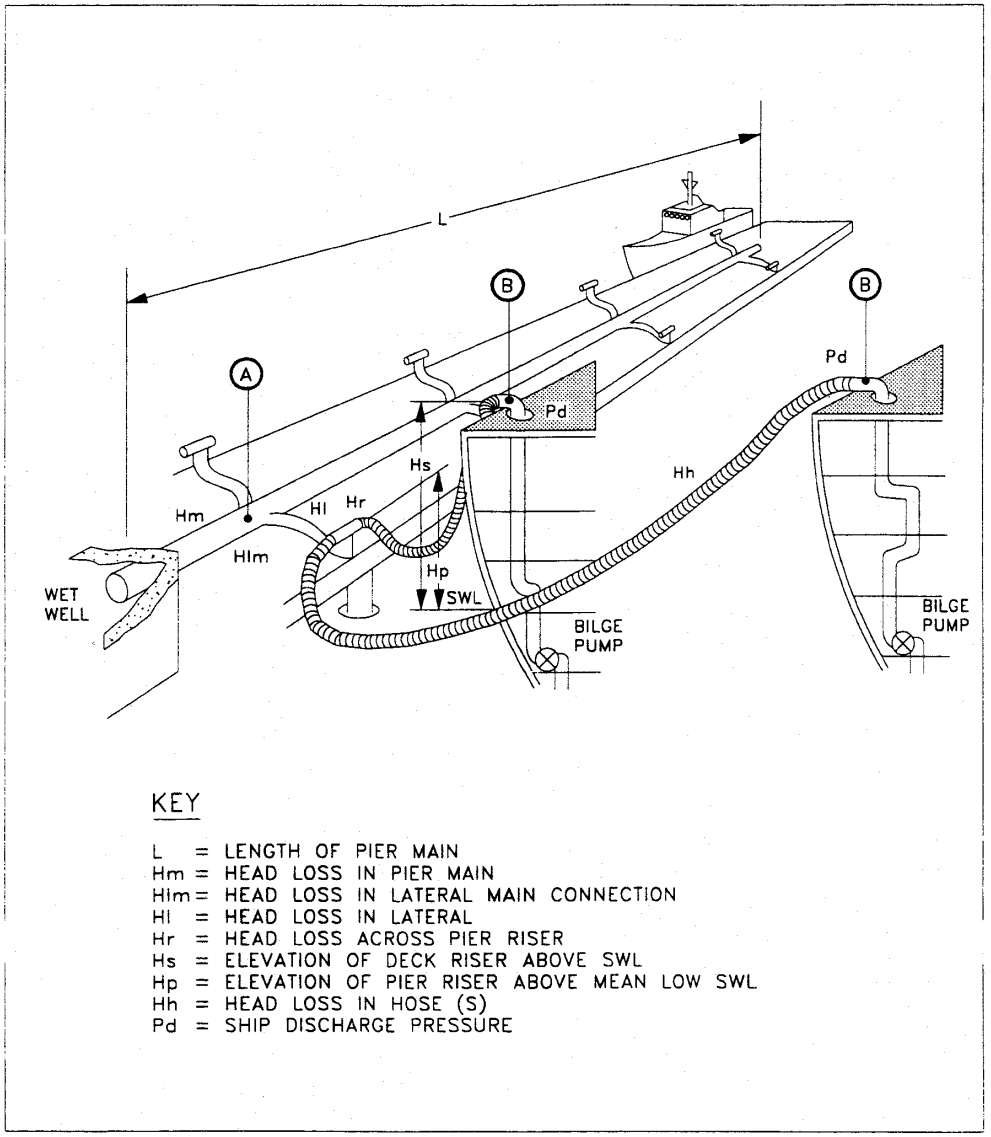

Figure 11
Oily Waste Collection Pipeline - Nomenclature

For each ship in the berthing plan and for each berth, sum the head losses due to flow and compare this sum with the ship deck discharge pressure using Equation 13.

EQUATION (IP): $[H_m+H_r+H_l+H_{lm}+H_h+(H_p-H_s)]k < P_d$ (13)

or

EQUATION (SI): $[H_m+H_r+H_l+H_{lm}+H_h+(H_p-H_s)] < P_d$

where

H_m and H_l	=	head loss in pier main and lateral, respectively, ft (kPa)
H_r, H_h, H_{lm}	=	head loss in pier riser, ship's connecting hose, and lateral to main connection, respectively, ft (kPa)
(H_p-H_s)	=	elevation difference between pier riser, Hp, and ship's deck riser, Hs, ft (kPa). See Figure 11 for schematic
k	=	0.445 psig/ft
P_d	=	ship's deck riser discharge pressure, psig (kPa) (see Table 11)

If the inequality is not satisfied for a ship at any berth, reiterate the calculations first for an assumed larger main diameter and then for a larger main and lateral diameter (if necessary).

3.8.5 Pump Stations

a) Design. Design pump stations to handle the cumulative Q_{main} for piers served assuming that individual pier main flows occur simultaneously. Package pump stations are acceptable for oily wastes if the following are considered:

(1) Wet Well Liner. A protective rubberized liner or alternative protective coating should be provided to resist oil and grease and saltwater attack.

(2) Ventilation. Provide continuous ventilation with complete air changeover every 2 minutes.

(3) Inlet Screens. Provide basket or bar type screens on a pump inlet which can be removed and cleaned at the surface without personnel entry.

b) Pump Selection. Determine pump capacity and operating cycle as in paragraph 2.4. Use positive displacement pumps with pressure relief valve, rather than centrifugal pumps, to reduce mechanical formation of emulsion at oily waste treatment plants. Pumps should pass solids having a diameter 0.125 inches (3 mm).

c) Pump Controls. Provide controls suitable for Class I, Division 1, Group D safety classification. Use float or sonic type mechanisms, not air bubblers, for pump control and alarm. Provide discharge pump control valve to minimize surge effect on equalization basins at oily waste treatment plants (not applicable for positive displacement pumps). Provide an alarm system for overflow or power failure. Provide manual override of pump controls but not of low level alarms.

d) Metering. Specify the following to monitor station activity: accumulating flow meter, elapsed time meter for pumps and ventilator, and pump suction and discharge pressure gages with oil-filled diaphragm and cutoff valves.

3.9 Oily Wastewater Treatment

3.9.1 General. No single treatment process or commercial device will remove all forms of oil (emulsified, free or dissolved) in oil-water mixtures. A series of treatment process units may be utilized to achieve the desired effluent quality. The degree of treatment required will be based on the most applicable discharge limit for a POTW or navigable water. Select oily wastewater treatment options from those presented in Table 13. In addition, sludge treatment and disposal must be

considered (refer to NAVFAC P-916, User's Guide for the Handling, Treatment, and Disposal of Oily Sludge and MIL-HDBK-1005/8 for sludge handling systems).

3.9.2 Treatment Requirements. The level of required treatment for oily wastewater depends on the discharge criteria (POTW or navigable water).

3.9.2.1 Discharge to Publicly Owned Treatment Works (POTW). Typical effluent quality requirements can be achieved by batch treatment gravity separation processes to remove free oil from wastewater. The oily waste is discharged into a short-term storage/separation tank referred to as a load equalization tank (LET). The waste is received for a predetermined number of days and then allowed to sit quiescently for about 24 hours to ensure optimum gravity separation. Free oil floats to the surface and is skimmed off. Settleable solids sink and are scraped to a hopper for withdrawal and disposal. Typical LET effluent contains less than 50 ppm of oil and grease. Multiple LETs should be provided for semicontinuous (fill and drawoff) operation of the facility. The pretreatment scheme is shown in Figure 12.

a) An induced gravity separator should be provided for additional treatment when LET effluent contains more than 50 ppm of oil and grease. Provide a bypass around the induced gravity separator. In an induced gravity separator, total flow is distributed through numerous flow paths and formed by inclined plates or tubes at laminar velocity. This increases suspended solids contact, and it aids solids separation by improving the flotation and settling characteristics of the enlarged particles.

b) Design guidelines and criteria for these unit processes are presented in paragraph 3.10.

Table 13
Guidelines for Oily Wastewater Treatment

Treatment Option	Description	Comments
Gravity Separation:	Separation of grease, oil, and settleable solids from water due to density differences.	Effectiveness usually restricted to removal of free oil and settleable solids.
Equalization basin	Tank or lined pond to dampen hydraulic and contaminant surges. If agitation is not employed, provide drain-off for flotables and settleables.	Provide at least two basins operated in parallel as semi-continuous process. Fill period of 5-7 d and settling period of ≤2 d. Provide oil skimming and sludge scraping equipment. Design based on oil droplet diameter of 0.015 cm and is not necessarily typical of oil-water mixtures. Relatively inefficient and requires significant amount of space. Maintenance requirements are high if maximum treatment efficiency is to be attained. See Figure 18 for details. Avoid pumping influent oily wastewater to minimize mechanical emulsification. Use as pretreatment process preceding discharge to POTW or other onsite treatment process. Low capital and maintenance costs. Minimal space requirements. Operating requirements for cleaning plates and tubes may be high. See Figure 19 for additional details. Also, refer to NFGS-11311, Parallel Plate Gravity Oil-Water Separator.
American Petroleum Institute (API) separator	Long, rectangular tank designed to provide sufficient hydraulic detention time to permit free and slightly emulsified (mechanical) oil to agglomerate and rise to the surface and suspended solids not entrapped in the oil to settle. Oil skimming and sludge raking required.	
Parallel plate separation	Tank equipped with inlet, oil coalescing, and outlet compartments to enhance separation of oil and suspended solids from oily wastewater. Number of coalescing plates or tube modules dependent on flow and characteristics of oil-water mixture.	
Vertical tube separator	See parallel plate separator.	See parallel plate separator.
Skimming dam	Low dam or weir placed in a flow through channel to pond water. Floating baffle retains flotables.	Utilize to impound contaminated surface runoff or spill for gross contaminant recovery and transfer to other treatment processes. Low capital, operating, and maintenance costs.
Thermal (cooker)	Heated vessel to accelerate liquid-liquid separation.	Oil reclamation process can be effective in breaking physical emulsions but increases solubility of oil. High operating costs, and inefficient for dilute oil-water mixtures.
Coalescing (mechanical)	Induced agglomeration of small oil droplets to aid gravity separation.	Effective in breaking physical emulsions when suspended solids do not interfere. Not effective in removing chemical emulsions.

Table 13 (Continued)
Guidelines for Oily Wastewater Treatment

Treatment Option	Description	Comments
Filters	Oily wastewater applied to filter media either by gravity or by pumping. The reusable or disposable media is an oleophilic or hydrophobic packed, manufactured fibrous material or diatomaceous earth. Sand filters also used for effluent polishing.	High operating and maintenance costs. Efficiency decreases with low fluid temperatures and high oil concentrations. Wide variations in type and quantity of oil and grease reduces reliability of system. Pretreatment to remove suspended solids is usually required.
Dissolved or induced air flotation	Gravity separator using small air bubbles to lift oil globules to surface.	Effective in coalescing physical emulsions. High density suspended solids will decrease oil removal efficiency. Moderate capital and operating costs.
Ultrafiltration	Low-pressure (50-100 psig [345 kPA-689 kPA])membrane process for separating emulsified oils. Oil droplets are retained by the membrane, concentrated and removed continuously. Usually preceded by an equalization tank and process tank.	In conjunction with gravity separation devices, effective in separating stable emulsions. High operating and maintenance costs and substantial pumping requirements.
Absorption	Penetration of one substance in one phase into the mass of another substance of a different phase.	May be effective as a tertiary process in removing low concentrations of highly emulsified or dissolved oil. High operation and maintenance costs. Highly sensitive to suspended solids.
Absorbent	Hydrophobic material with high affinity for specific oils.	For design guidance, refer to Water-Oil Separator for Fuel-Oil Handling Facilities, by Mootz.
Adsorption	Concentration or accumulation of a substance at the surface or interface of another substance.	May be effective as a tertiary process in removing soluble oil and chemically stable emulsions. Refer to EPA PB 259147.
Activated carbon	Utilize fixed, expanded, or moving carbon bed(s) to achieve desired treatment objectives.	Pretreatment usually required to reduce suspended solids. Proper section of carbon type and optimum operating parameters. The presence of other chemicals may diminish effectiveness of oil adsorption. High capital and operating costs.
Adsorbent resin	Effectiveness based on Van der Waals' adsorption rather than coulombic ion exchange.	Same as for activated carbon.

Table 13 (Continued)
Guidelines for Oily Wastewater Treatment

Treatment Option	Description	Comments
Biological	Oxidation by aerobic biological activity using fixed or suspended growth systems.	May be used as secondary treatment following primary processes that reduce suspended solids and most of free oil fraction. Requires that adequate nutrients be present and extended aeration period and mean cell residence time. Most applicable to existing biological treatment facilities.
Activated sludge, trickling filter or RBC	Refer to MIL-HDBK-1005/8 for design guidelines.	Use to remove soluble oil and break chemical emulsions. Can be utilized in combination with other treatment options discussed in this table.
Lagoon	Refer to MIL-HDBK-1005/8 for design guidelines.	Aerobic oxidation without mechanical aeration is minimal. Buildup of floating oil and sludge can promote anaerobic conditions that will result in the generation of undesirable gases. Not suitable for cold climate.
Chemical	Refer to Section 2 and Table 7.	Use to remove soluble oil and break chemical emulsions. Can be utilized in combination with other treatment options discussed in this table.
Emulsion breaking	System may include chemical storage and feed, flash mixing, flocculation, and settling. Chemicals used include sulfuric acid, alum, caustic soda, or activated alumina. Polyelectrolytes may be used as primary coagulant or as coagulant aid.	Usually used in conjunction with previous treatment options. Benchscale studies required for proper selection of best chemical(s), optimum dosages, and optimum pH. Use actual flow-weighted oily wastewater sample during laboratory studies to achieve best results. Polyelectrolyte use as primary coagulant may significantly reduce sludge production.

3.9.2.2 Discharge to Navigable Water. To meet stringent effluent quality requirements for direct discharge, additional treatment is required after gravity separation in a LET. Depending on specific load requirements, 80 to 90 percent of the free and emulsified oil remaining after LET treatment must be removed by secondary and tertiary treatment steps. An NPDES permit would be required.

a) Batch treatment in a LET is the recommended primary unit operation. Secondary treatment such as a dissolved air flotation (DAF) or induced air flotation (IAF) unit will remove significant amounts of residual and some emulsified oil and grease. Normally, the effluent from a DAF/IAF unit will contain 10 to 50 mg/L of oil and grease. Based on treatability studies, it may be necessary to add coagulating and emulsion breaking chemicals to the DAF/IAF influent to optimize removal of contaminants. Sulfide control and metals removal may also be necessary to meet stringent discharge criteria.

b) To provide consistent direct discharge quality effluent, tertiary treatment is required. The recommended process is multimedia filtration with relatively fine graded media followed by carbon adsorption. In certain situations, primarily where flows are higher and space limitations prevent installation of a sufficient number or size of multimedia filters, coalescing filtration units should be considered. Coalescing filters are mechanically complex, but they perform reliably if operated and maintained properly. Figure 12 shows a schematic flow diagram for a treatment system to discharge to navigable waters.

c) Design guidelines and criteria for these unit processes are presented in paragraph 3.10.

3.9.2.3 Redundancy. The design of an oily waste treatment system for either discharge criteria should provide 100 percent redundancy for critical process equipment. (Determination of criticality is based on the impact on effluent quality of loss of a component, and on a specific hazard analysis. Also refer

to NAVFACINST 4862.5). It is important to avoid the loss of a key unit operation during either scheduled or unscheduled maintenance downtime for any piece of equipment.

Guidelines for LET design require multiple units and redundant capacity for normal operation of the gravity separation process (refer to paragraph 3.10.2). It is also recommended that 100 percent redundancy be provided for downstream polishing treatment units, transfer pumping equipment, and effluent monitoring instrumentation.

3.9.3 Sulfide Control

a) Sulfide Formation. The presence of sulfides in oily wastewater is primarily due to biological reaction involving anaerobic bacteria that use hydrocarbons as their energy source and convert sulfates to sulfides. The pH of wastewater affects the distribution of sulfide species. If low pH oily wastewater is exposed to the atmosphere, hydrogen sulfide (H_2S) gas is released causing severe odors and corrosion problems. At alkaline pH, the sulfide species do not escape to the atmosphere. Exposure to small concentrations of H_2S in the air is also a health hazard as it can affect the respiratory system.

The time gap between the generation and treatment/ disposal of oily wastewater is a major factor for sulfide formation. During this time, oxygen is rapidly depleted causing a decrease in the ORP which favors the activity of sulfate reducing bacteria. This time should be kept at a minimum to limit sulfide production.

b) Control Techniques. The principal physical and chemical methods for sulfite control at oily waste treatment plants include chemical oxidation, chemical precipitation, and wastewater aeration. Other techniques such as biological processes or adsorption have limited application at Navy oily waste treatment plants due to cost and operational requirements of these processes.

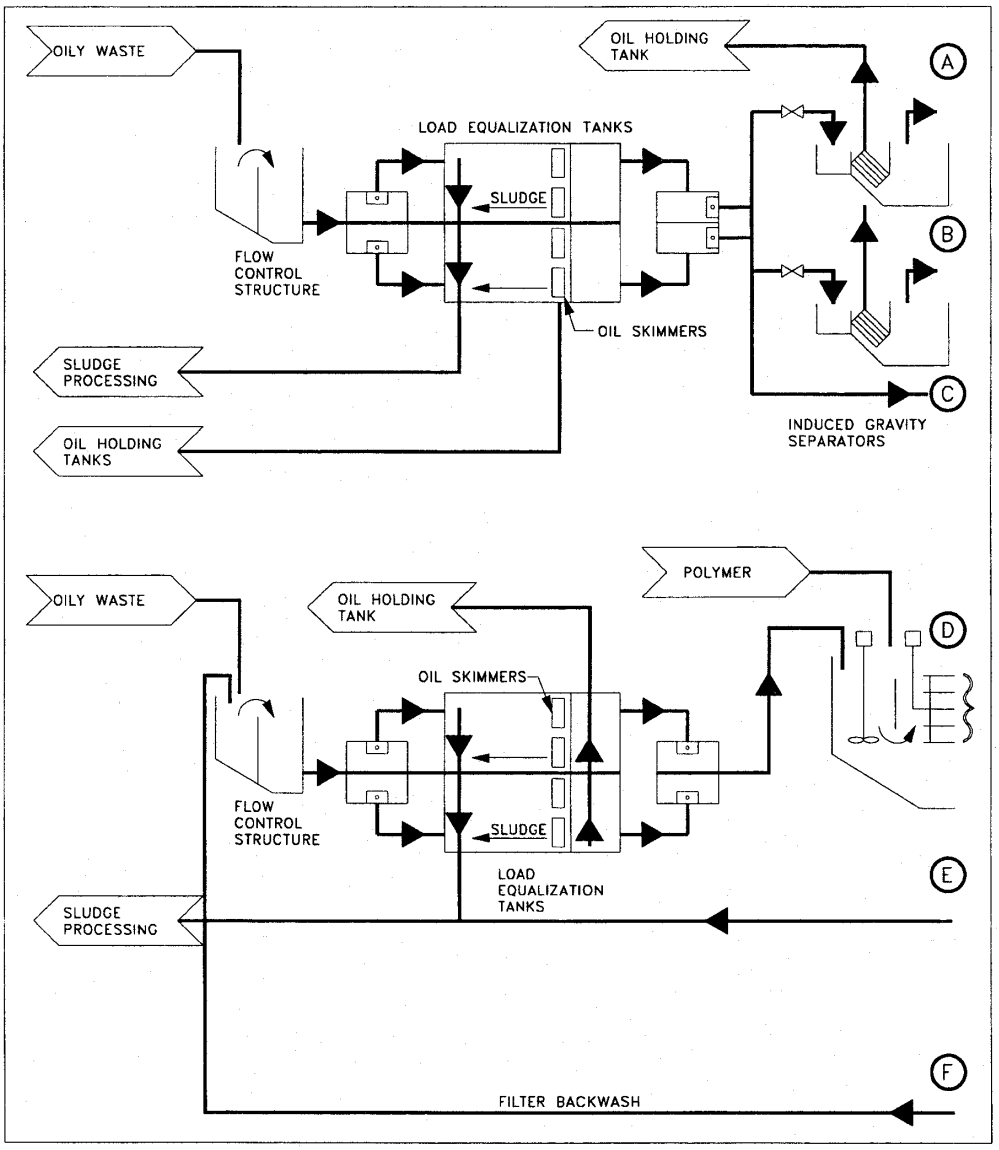

Figure 12A
Treatment System for Discharge to POTW or Navigable Water

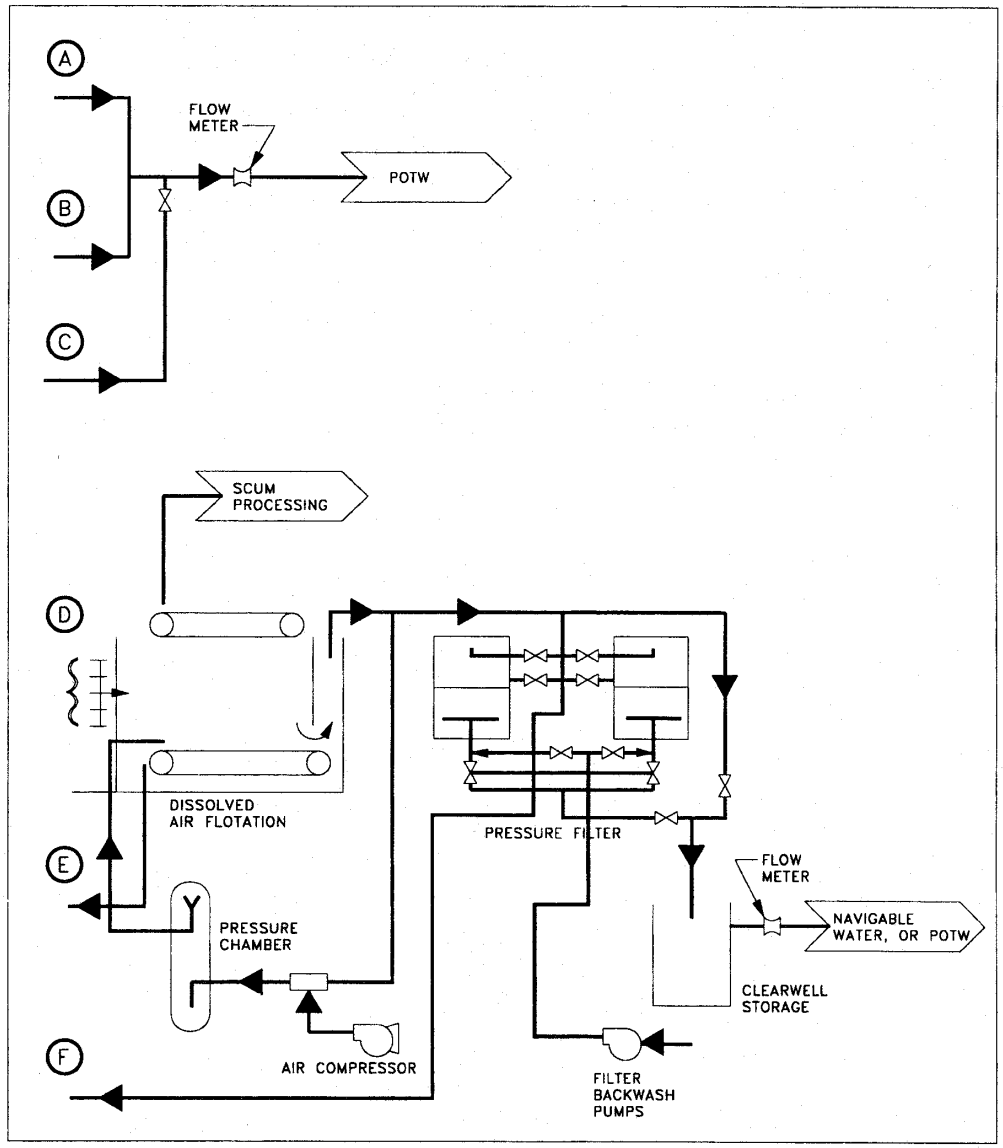

Figure 12B
Treatment System for Discharge to POTW or Navigable Water

(1) Chemical Oxidation. Treatment with agents such as hydrogen peroxide and chlorine or hypochlorite is effective in removing sulfides. The amount of chemical needed should be determined from laboratory investigation as the amount can vary significantly from stoichiometric requirements. Theoretically, one gram of hydrogen peroxide (H_2O_2) will oxidize one gram of hydrogen sulfide, but under actual operation the amount may vary by up to two to three times. Hydrogen peroxide is commercially available as either a 30, 50 or 70 percent solution by weight and the equipment required is relatively simple. For most oily wastewater plants, a package system in which peroxide is withdrawn directly from the container and applied with a metering pump will be adequate and is available from various suppliers. Peroxide is a strong oxidizing chemical and therefore tanks, pumps, and piping should be made with peroxide resistant materials. These include PVC, polyethylene, aluminum, or stainless steel.

Hypochlorite and chlorine can also be used for sulfide control. For smaller plants, hypochlorite is recommended due to safety reasons and the simple hardware requirements. The actual amount of these chemicals needed to oxidize sulfides should be determined from laboratory experiments as the actual amount can vary significantly from the stoichiometric amount.

(2) Chemical Precipitation. The removal of sulfides by precipitation should be used at plants where removal of emulsified oils from wastewater is desired (see paragraph 3.9.5) due to common hardware and treatment requirements. Accurate pH control is required for this process to control sulfide equilibrium. Under alkaline conditions (pH about 8.5), sulfides will be removed by precipitation with dissolved metals in wastewater; whereas, at lower pH, the sulfides will escape into plant atmospheres as odorous hydrogen sulfide gas.

Sodium hydroxide solution may be used to raise wastewater pH. This solution should be added in-line, prior to wastewater mixing to avoid sulfide release to the atmosphere. An in-line addition system, shown in Figure 13, consists of a

storage tank, metering pump, and in-line mixing element. The addition of alkali can be controlled by simple instrumentation for pH control.

The precipitated sulfides are removed during subsequent oil/water separation equipment such as DAF or IAF (refer to paragraph 3.10.6).

(3) Aeration. Air injection into oily wastewater can prevent sulfides. In this technique, wastewater is aerated for an extended period of time, such as up to 24 hours to prevent ORP conditions. Aeration can cause release of existing sulfides due to mixing and should be avoided in enclosed areas.

The sulfide formation during storage can also be prevented by the addition of a supplemental oxygen source, such as nitrate salts. The bacteria will consume nitrates instead of sulfates and sulfides will not be formed. The addition of nitrates has a disadvantage in that it enhances biological activity in wastewater and may significantly increase suspended solids loading.

3.9.4 Dissolved Metals Removal

a) General. Oily wastewater may contain significant amounts of dissolved metals. The removal of the metals may be necessary due to discharge regulations particularly for direct discharging plants or for improved plant performance. Metals such as iron, zinc, lead, copper, and nickel can be reduced to low levels by chemical precipitation.

b) Treatment. The removal of dissolved metals can be accomplished by raising wastewater pH above 8 by adding lime or sodium hydroxide. At this pH, metals form highly insoluble precipitates. The minimum solubilities of different metals occur at different pH values as shown in Figure 14. Therefore, a laboratory investigation is essential to determine the optimum pH level. For plants using sulfide control by chemical precipitation, additional treatment for metals removal may not be necessary. As the alkaline solution is added for sulfide

control, it will affect metals precipitation and metals will be co-precipitated as hydroxides and sulfides. The metal precipitates will be separated from wastewater in the oil-water separation equipment, such as the DAF or IAF. For improved removal of these precipitates, addition of polyelectrolytes may be necessary. The laboratory investigation should be conducted to select the type and amount of polyelectrolyte for simultaneous suspended solids (metals precipitates) and emulsified oil removal from wastewater.

3.9.5 Emulsified Oil Treatment. Oily wastewaters contain varying amounts of emulsified oils and, unlike free oils, simple gravity settling is not effective for their removal. Formation of oil emulsions should be minimized as much as possible by voiding excessive turbulence and the use of detergents or emulsifying agents. Segregate emulsions for special treatment wherever possible. Treatment of these segregated emulsions, which involves oil recovery, is discussed in paragraph 3.10.8.

Emulsions are usually complex, and bench or pilot plant testing is generally necessary to determine an effective method for emulsion breaking. Common emulsion-breaking (demulsification) methods are a combination of physical and chemical processes. The most common approach to removing emulsified oils from wastewater is by the use of chemicals. These emulsions can be broken by chemicals which will balance or reverse interfacial surface tension, neutralize stabilizing electrical charges, or precipitate emulsifying agents and cause flocculation to form larger particles for subsequent removal. The effectiveness of various chemicals in breaking emulsions must be determined by laboratory testing. Refer to American Petroleum Institute (API), Manual on Disposal of Refining Wastes, Volume on Liquid Wastes for the testing procedure. Coalescence and flotation separation of oil and water phases follow chemical addition. Chemicals commonly used include alum, ferrous sulfate, ferric sulfate, ferric chloride, sodium hydroxide, sulfuric acid, lime, and polymers. The polymers or polyelectrolytes are large organic molecules that may be charged (cationic or anionic).

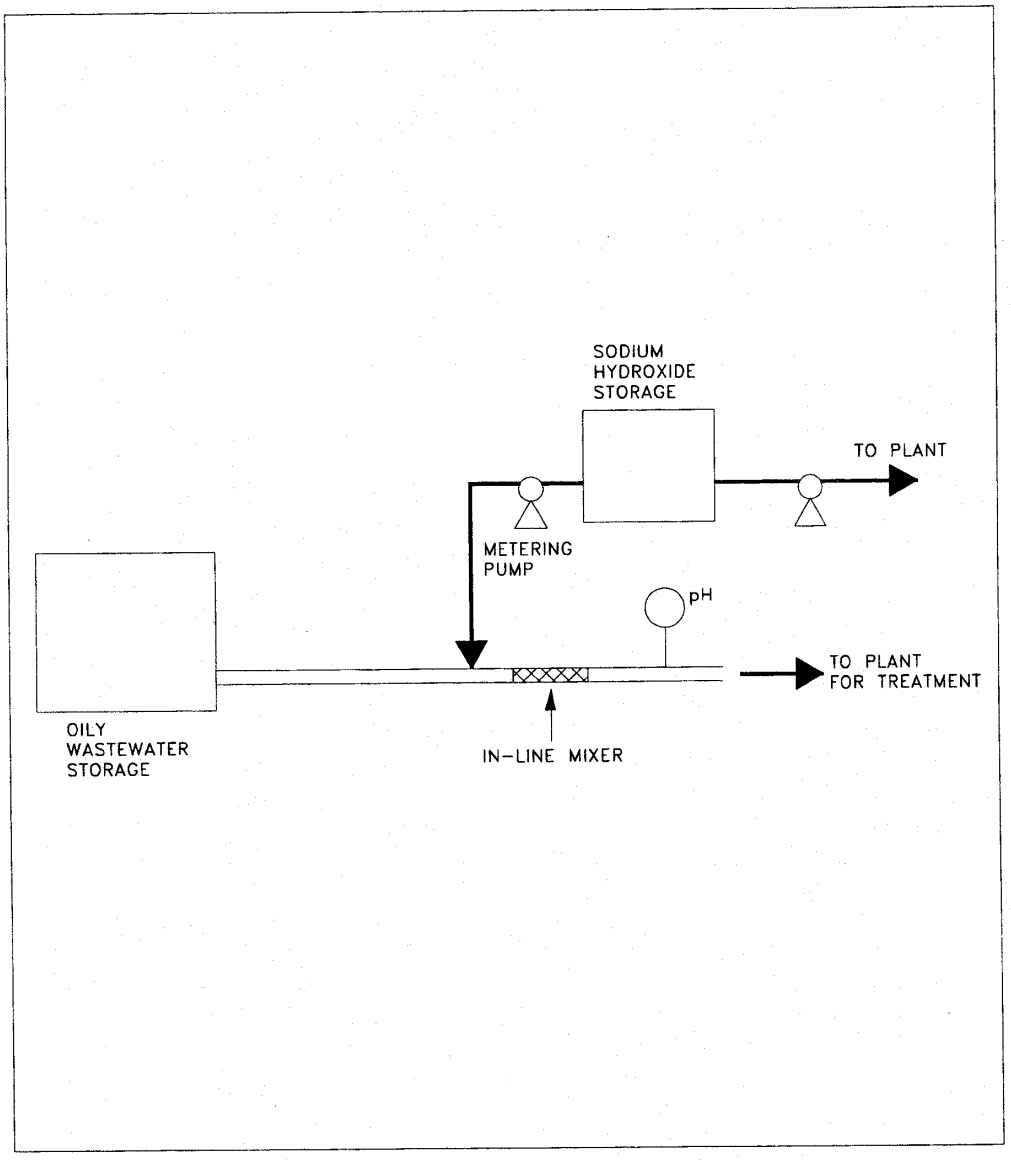

Figure 13
In-line Chemical Addition System

These molecules react with emulsified oils or colloidal material and form large floc particles. Sodium chloride (NaCl) is not recommended for "salting out" emulsions since it is slow, requires large amounts of NaCl (20 to 70 g/L), and results in a corrosive liquid product. For chemical handling and feeding details, refer to Section 4. General guidelines for the selection and application of chemicals is as follows:

a) Coagulants. Anionic and cationic surface-active agents are not compatible and tend to neutralize each other. Generally, reactive anions such as OH^- and PO_4^{-2} will break water-in-oil emulsions; reactive cations, such as H^+, Al^{+3} and Fe^{+3} will break oil-in-water emulsions. For oily wastewaters containing dissolved iron, addition of an inorganic coagulant may not be needed. This dissolved iron can function as a coagulant under alkaline pH conditions. An inorganic coagulant in combination with organic polymers can provide satisfactory demulsification for oily wastewater.

b) Operating pH. Chemical addition to form a heavy metal hydroxide flocculent precipitate can be used to break dilute oil-in-water emulsions. However, the best emulsion breakage effect by ferric chloride, ferric sulfate, and other salts is achieved in an acidic medium. Limited application exists at plants employing heavy metal or sulfide removal by precipitation, as slightly alkaline conditions are desired for these situations.

c) Wetting Agents. Wetting agents can break water-in-oil emulsions. However, correct dosage is critical, as overdosing will destroy the emulsion breaking action. Almost all organic polymer formulations contain wetting agents and therefore separate addition of these is not required.

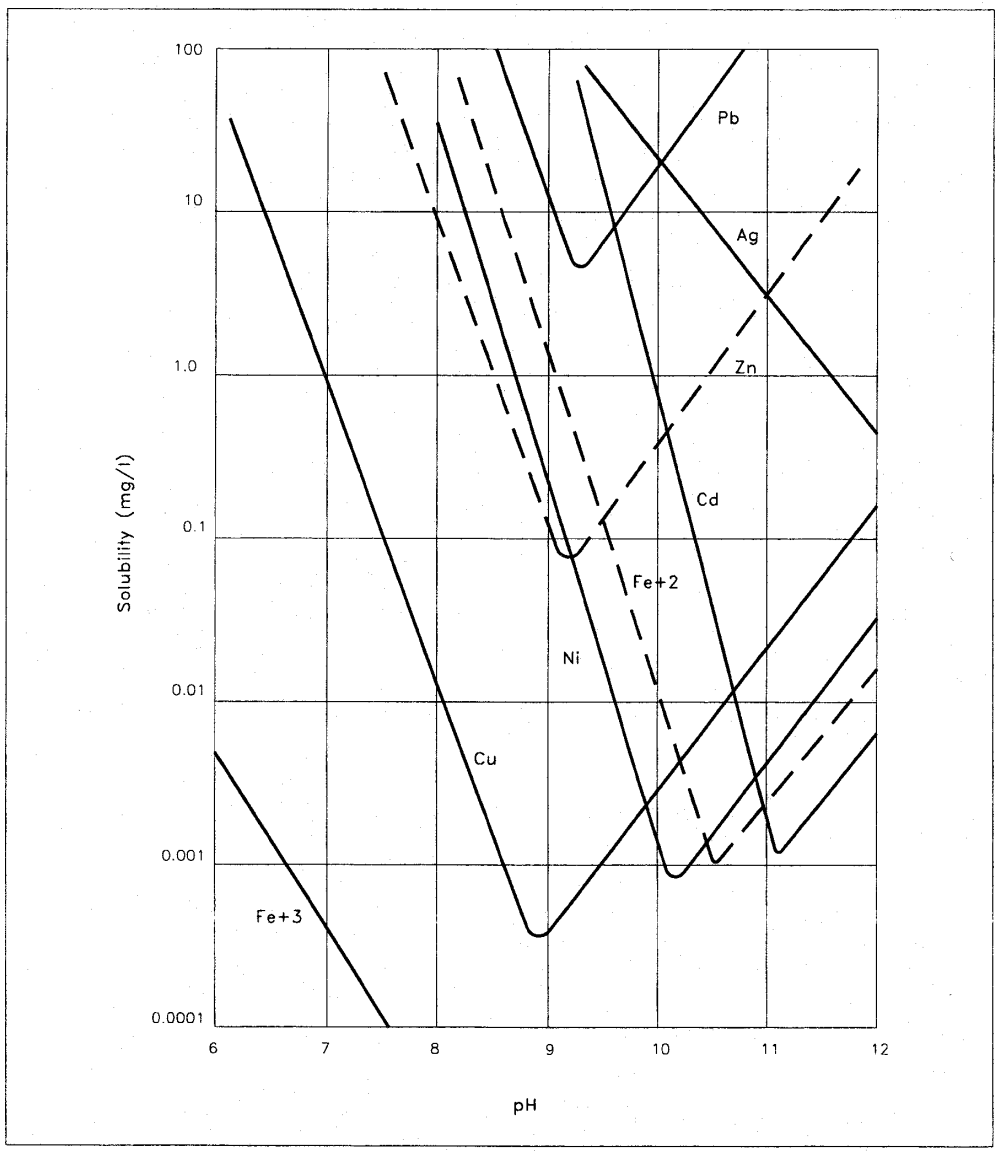

Figure 14
Solubilities of Metal Hydroxides as a Function of pH

d) Polyelectrolytes. Organic polymers can be used for breaking emulsions. A wide variety of polymers with varying molecular weight, charge, and different monomers that can be used for oily waste are available. Polymers such as polyamines, quaternary amines, and polyacrylamates are effective for emulsion breaking. The quaternary amine polymers and non-ionic polymers can be applied over a wide range of pH conditions and are compatible with processes for dissolved metals removal that employ pH adjustment followed by removal of precipitates.

e) Chemical Mixing and Flocculation. A two-step procedure is required for chemical addition to wastewater. The first step is rapid mixing to provide a thorough and complete dispersal of chemical throughout the oily waste. A short detention times of less than 1 minute is usually adequate and in-line or mechanical mixers can be used. The rapid mix stage is followed by slow mixing or flocculation to form larger floc particles. This is carried out in either a mechanically mixed tank or a baffled tank. A detention time of 10 to 30 minutes should be used for the formation of properly sized floc. The mixing speed is to be kept low to avoid floc shear.

f) Floc Separation. Separation of the flocculated oil and other solids from the water after chemical addition is the most vital operation in the treatment of emulsified oily wastes. Separation can be achieved in gravity settling, DAF or IAF. Design guidelines and criteria for these unit processes are presented in paragraphs 3.10.5 and 3.10.6.

3.10 Design Criteria for Oil-Water Separators and Appurtenances

3.10.1 General

3.10.1.1 Processes. The basic process for removing oil from wastewater is the gravity type oil-water separator. The extent to which receiving waters or treatment works are impacted by separator effluent determines whether additional treatment is required. Treatment methods available for improving separator

effluent are summarized in Table 12. Gravity separators alone will not remove emulsified oils. The methods described in paragraph 3.9.5 are required to break emulsions.

3.10.1.2 Equipment. Consider wastewater flow rate, oil droplet size and distribution, the concentration of oil and grease and suspended solids, differences in specific gravities of wastewater components, and operating temperatures in selection and specification of equipment. Gravity separators are usually used as pretreatment unit processes since effluent quality fluctuates significantly due to large variances in the quality of the influent wastewater. Construct separators in parallel to provide continuity of operation during individual unit repair, cleaning, or inspection. If waste volumes are small and adequate off-line holding tank capacity is provided, a single separator may be used.

3.10.1.3 Equalization (Surge Tank). Provide side holding tank or basin to equalize and store oily wastewater flows prior to oil-water separation. Holding facilities can be concrete or steel tanks. They should be covered or under a roof in a rainy climate or where wildlife is present.

3.10.1.4 Grit Removal. Use grit removal equipment to remove solids particles larger than 200 microns such as sand, metals, and rags prior to entering load equalization tanks.

3.10.2 Load Equalization Tank (LET). The LET is a batch operated, gravity oil-water separator. Oily wastes are discharged to the LET for a predetermined collection period. Wastes are settled, the oil skimmed off to storage, and sludge withdrawn for further processing and disposal. Clarified water is passed on for additional treatment or discharge.

a) Provide at least two LETs for sequential fill and draw operation. Each tank should have a capacity equal to the average flow for 7 days. Typical settling time is 24 hours. Sludge should be withdrawn daily. Longer LET operating periods or large volume upstream receiving tanks should not be used since they promote anaerobic conditions and H_2S gas production.

These conditions will corrode metal and concrete, cause odor problems, and create potential health hazards when H_2S concentration exceeds 10 ppm.

b) Under certain circumstances, provision of a third LET should be considered. At larger Naval installations subject to periodic surges in ship traffic in port, the capability to process sudden, abnormally high oily waste flows may warrant extra reserve capacity. At smaller Naval installations where available land area imposes layout restrictions, three reduced volume LETs may be necessary to provide operating flexibility for normal peak flow occurrences and for tank cleaning downtime. Due to the different characteristics of shore waste, a third LET should be considered for treatment of shore-generated oily waste at shore facilities where large volumes of shore-generated oily waste are to be treated with ship oily waste.

3.10.2.1 Basis of Sizing. Estimates are required of the numbers and types of berthed ships discharging to the pierside collection system and SWOBs. Nominal shipboard oily waste generation rates are 50,000 gpd (189,270 L/d) for aircraft carriers and 3,750 gpd (14,195 L/d) for other classes of ships. Estimates of barge and tank truck delivery volumes and frequencies should be compiled from historical records.

Alternatively, LET size could be based on analysis of Q_{daily}, $Q_{maximum}$, and Q_{peak} established for design of pierside collection systems. Refer to paragraph 3.8.1.2 for methodology for determining these flow rates.

3.10.2.2 Layout. Use rectangular, reinforced concrete tanks. The following guidelines for LET layout are suggested. See Figure 15 for a schematic of a LET.

	LET 7-Day Capacity	
Characteristic	0.1 to 0.5 Mgal	1.0 to 1.5 Mgal
Length:Width	3:1	5:1
Depth-ft (m)	10(3.05)	20(6.1)
Freeboard-ft (m)	1.5(0.5)	1.5(0.5)

At smaller Naval installations, where LETs of less than 15,000 gallons (56,781 liters) are required, circular steel LET may be more cost-effective than a rectangular concrete LET. Based on the quantity of material required and local availability and cost of materials, the circular tank could be less expensive to fabricate. The circular tank design also may allow more efficient use of available ground for system layouts on smaller parcels of land.

Secondary containment such as berm may be required to capture 100 percent of the capacity of the largest tank plus the maximum 24-hour rainfall in the last 25 years within its boundary. Premanufactured tanks should conform to Underwriters Laboratories Inc. (UL) 142, Steel Aboveground Tanks for Flammable and Combustible Liquids, specifications. Refer to local regulations for complete list of tank system requirements.

Where facility topography will permit, LETs should be located out of ground to facilitate gravity flow to downstream processes or the discharge point.

Example Calculations 1 and 2 give further guidance on LET sizing.

a) Example Calculation 1 - LET sizing (calculation is given first in English units and then in metric (SI) units):

Given: Daily Discharge from Pierside Collection System, Q_{daily} = 70,000 gpd [264,970 L/d]

Required: LET to receive for 7 days.

LET Volume = (70,000 gpd)(7 days) = 490,000 gal
[(264,970 L/d)(7 days)= 1,854,852 L]

(490,000 gal)(1 ft^3/7.48 gal)= 65,508 ft^3
[(1,854,852 L)(1 m^3/1000 L)= 1,855 m^3

Use 10 ft [3.05 m] depth per guidelines:

65,508 ft^3/10 ft = 6,551 ft^2 surface area
[1,855 m^3/3.05 m = 608 m^2 surface area]

Use 3:1 length to width ratio per guidelines

(3w)(w) = 6,551 ft^2 [608 m^2]
w^2 = 2,183.6 ft^2 [202.7 m^2]
w = 46.7 ft [14.2 m]

Try 50 ft [15.2 m] width and try LET size.

50 ft [15.2 m] x 150 ft[45.7 m] x 10 ft[3.05 m] deep

Check total volume and freeboard at 7-day oily waste volume:

(50 ft)(150 ft)(10 ft)(7.48 gal/ft^3) = 561,000 gallons
[(15.2 m)(45.7 m)(3.05 m)(1000 L/m^3)= 2,123,609 L

Freeboard volume =

561,000 - 490,000 = 71,000 gallons
[2,123,609 L - 1,854,852 L] = 268,757 L

LET Volume per foot [meter] of depth =

(50 ft)(150 ft)(1 ft)(7.48 gal/ft^3) = 56,100 gal/ft
[(15.2 m)(45.7 m)(1 m)(1000 L/m^3)= 694,640 L/m]

Freeboard available:

71,000 gal/56,100 gal/ft = 1.26 ft = 15 in.

[268,757 L/694,640 L/m = 0.384 m = 1.26 ft = 15 in.]

Therefore, use LET size 50 feet wide by 150 feet long by 10 feet deep.

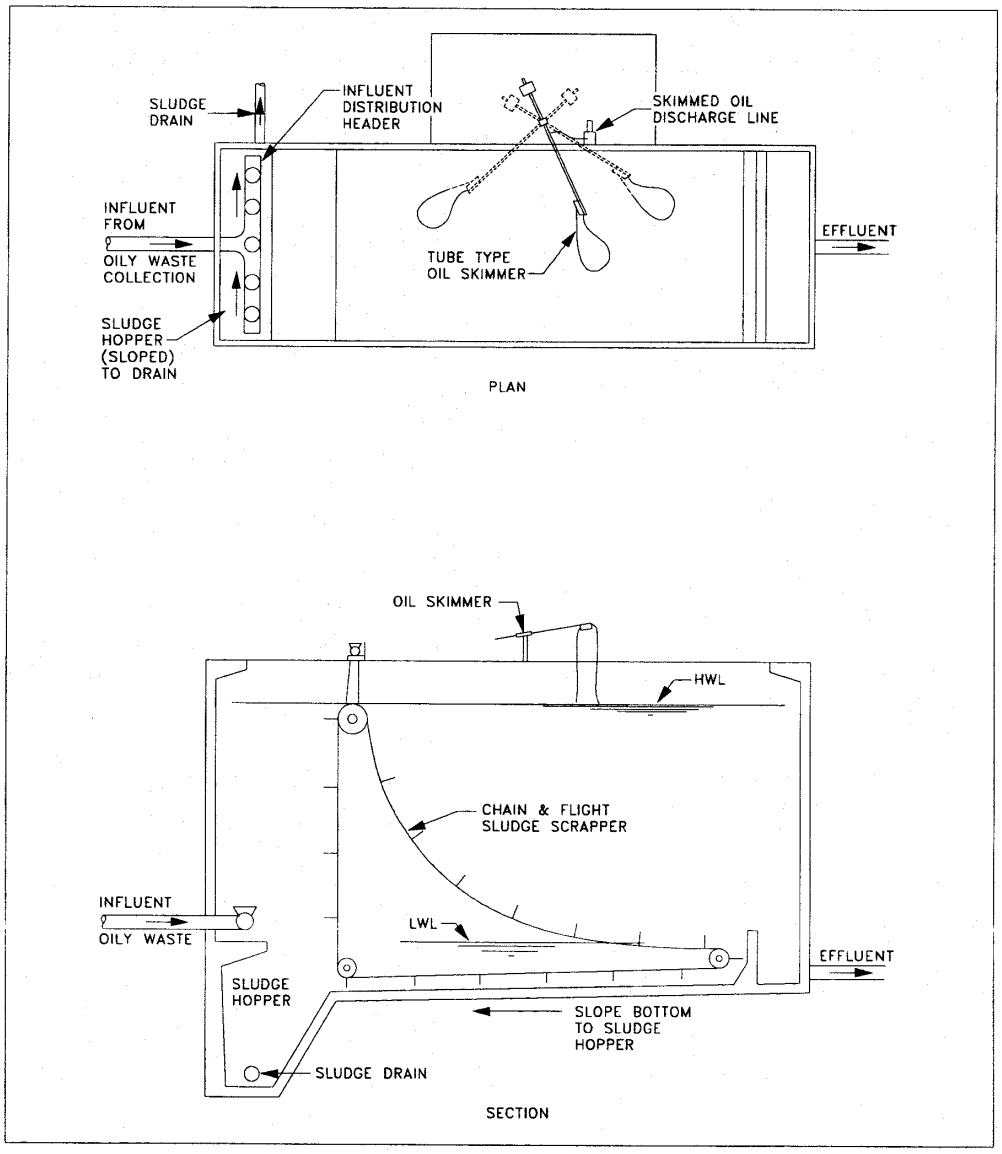

Figure 15
Load Equalization Tank (LET)

b) Example Calculation 2 - LET influent header outlets:

The recommended equation for determining the number of outlets on the distribution header is (first in English, then in SI units):

EQUATION: $$N_o = 0.4085\ Q_{main}/(V_o)(D_o^2) \qquad (14)$$

$$N_o = 21.2\ Q_{main}/(V_o)(D_o^2)$$

where

N_o = number of outlets on distribution header
Q_{main} = instantaneous flow rate from pierside collection system pumping station, gpm (L/min)
V_o = desired velocity of flow from distribution header outlets, fps (m/s). Suggested value 0.5 fps (0.15 m/s)for first trial.
D_o = diameter of outlet openings in distribution header, in. (mm)

Use standard flare diameter based on header diameter for first trial.

In this example, Q_{main} is estimated from the average daily flow using an assumed peaking factor of 3. In actual design of a LET, Q_{main} would be available from the pierside pumping station design or the actual pumps used in an existing pierside pumping station. Q_{main} is determined by Equation 6.

For Example Calculation 1, LET daily discharge rate from pierside of 70,000 gpd [264,970 L/d].

Assumptions

Q_{main} = (70,000 gpd)(l day/1,44O min)(3) = 146 gpm
[(264,970 L/d)(1 day/1,440 min)(3)= 552 L/min
V_o = 0.5 fps [0.1524 m/s]
D_o = 8 in. [203.2 mm]

N_o = [(0.4085)(146)]/[(0.5)(8)^2] = 1.86 English

= [(21.2)(552)]/[(0.1524)(203.2)^2] = 1.86 SI

Therefore, use two flared outlets.

3.10.2.3 Sloping Bottom. The bottom of the LET should slope from the outlet end back to the inlet end at about 1/8 inch per foot (10.4 mm/m) of tank length. This will facilitate the transport of settled solids to a solids collection hopper at the inlet end of the LET. The collection hopper bottom should slope from side to side at about 1/4 inch per foot (20.8 mm/m), with a sludge withdrawal at the low side.

3.10.2.4 Sludge Scraping Mechanism. Provide chain and flight sludge scraping mechanism. Fabricate major components from nonmetallic materials (such as nylon resins) to avoid corrosive effects of salt water in oily waste. Specify fiberglass flights spaced 6 to 10 feet (1.8 to 3.05 m) apart. Specify polyurethane wear shoes to protect edges of flights from abrasion damage by the tank bottom rails and tank side track angles. Specify carbon steel for drive chain, drive sprocket, shaft sprockets, and shafts. Drag chain may also be specified as a high strength nylon resin. Specify that carbon steel components be shop-finished as follows: blast clean in accordance with Steel Structures Painting Council (SSPC), SP 5, Joint Surface Preparation Standard White Metal Blast Cleaning; and shop prime and finish coat with coal tar epoxy, similar to Carboline Carbomastic 3 and 14, 5 to 7 mils minimum dry thickness.

3.10.2.5 Oil Skimmer. Provide means of removing oil from surface of load equalization tanks and discharging to waste oil storage tank. Mechanical simplicity and efficiency and waste oil characteristics are the most important equipment selection criteria.

Two types of mechanical skimmers are described in subparagraphs a) and b). In most situations the flexible tube type skimmer is recommended for removal of floating oil. It

requires little maintenance, can operate continuously and unattended, provides a high recovery efficiency, and can be variably positioned for optimum coverage of LET area.

a) Flexible Tube Skimmer. This unit provides excellent removal rates of all types of waste oils, greases, and floating sludges, and it minimizes the removal of water with the waste oil. The unit consists of a flexible, polyurethane collector tube which is long enough to enable 16 feet (4.9 m) of tubing to be in contact with the water surface at all times. Floating oil, grease, and sludge adhere to the surface of the tube and are thus skimmed from the surface. The tube is circulated through a drive unit where scrapers clean the surface and divert waste oil to storage. A typical installation features the drive unit mounted at the end of a beam that is cantilevered from a mounting post at the side of a tank or basin. The unit should be mounted near the discharge end of the LET. For tanks ≤ 20 feet (6.1 m) wide, one unit may be sufficient. Tanks over 20 feet wide should be provided with two units mounted on opposite sides of the tank. Operating 24 hours/day, these units can remove up to 240 gpd (908 L/d) for light oils, 600 gpd (2,271 L/d) for medium oils, and 1,440 gpd (5,450 L/d) for heavy oils. For cold climate installations, the drive head/skimming assembly should be enclosed, insulated, and heated. Figure 16 illustrates a flexible tube skimmer installation.

b) Floating Weir Skimmer. This skimmer type uses an adjustable weir to set the overflow depth below the oil layer surface. These units are best applied to installations where separated oil is allowed to accumulate for a number of days and is then skimmed in a single operation. This differs from the continuous or daily intermittent operating scheme for the tube or mop type skimmer. There is a greater potential for skimming significant amounts of water with the weir-type device. The floating, weir-type skimmer is usually connected to a pump with a flexible hose. This enables an operator to manually move and position the skimmer for optimum interception of pockets of accumulated oil, if the layer is not continuous or is disturbed by skimming turbulence. In some units, varying the pumping rate will change the submergence level of the weir. Thus, a higher

pumping rate can be used for initial skimming operations, and as the oil layer decreases in thickness, the pumping rate can be reduced to raise the weir and minimize the potential for water carryover. Average pumping rates of 6 to 7 gpm (22.7 to 26.5 L/min) are suggested, with the maximum recommended rate at 10 gpm (37.9 L/min). Since they operate in contact with and are partially immersed in the oily waste, floating weir-type skimmers should be constructed of plastic or stainless steel. Figure 17 illustrates a floating weir skimmer installation.

3.10.2.6 Sample Taps. Provide sample taps along one wall of the LET, near the discharge end, spaced at 1-foot maximum depth intervals. For accessibility, they should be adjacent to and follow the incline of the tank top access stairway. Each tap should consist of a piece of 1-inch (25-mm) diameter PVC pipe, with length equal to the wall thickness plus 6 inches (152 mm), and with a 1-inch (25-mm) diameter PVC ball valve at the sampling end outside the tank. The through wall pipes should be set when the tank wall is formed and poured. The exterior surface of the pipe should be roughened prior to setting in the forms to ensure a good bond with the concrete and a grout ring should be provided at the midwall point as a precautionary obstruction to leakage along the pipe surface through the wall.

3.10.2.7 Water Supply. Provide a water supply with minimum delivery of 15 gpm (56.8 L/min) at 40 psig (276 kPa) around the top of the tank. At least two discharge points with hose bibb outlet controls should be provided on tanks less than 100 feet (30.5 m) long. For tanks longer than 100 feet, three or four outlet points should be provided. In areas subject to extremely cold weather, freezeless hydrants should be provided in lieu of hose bibbs. The water supply will be used for tank cleaning, foam control, and general housekeeping; therefore, potable quality is not essential. If a source of nonpotable, service water is available at a facility, it should be used for the LET supply. If it is necessary to tap the LET supply from the potable water system, a suitable backflow preventer must be installed in the LET supply line immediately downstream from the tapping point.

3.10.2.8 Corrosion Protection. Apply protective coatings to both the interior and exterior wall surfaces to ensure long-term

structural integrity of the LET. For interior surfaces, a coal tar epoxy coating system, similar to Carboline Carbomastic 14, is recommended.

These coatings are typically two component mixtures with a curing agent added just prior to use. The coating should have a high build characteristic, allowing application thickness of 8 to 10 mils. Two coats should be applied for a total dry thickness of at least 16 mils.

For exterior surfaces, a flexible epoxy-amine coating system, similar to Carboline 188, is recommended. The system should consist of two or three coatings: a primer and a high build finish coating; or a primer, an intermediate high build coating, and a finish coating. For either combination, the system should have a total dry film thickness of at least 10 to 11 mils.

3.10.3 API Separator. Use methods and criteria given in API Manual on Disposal of Refinery Wastes, Volume on Liquid Wastes, to design API separator, subject to the limitations presented in Table 14. For general arrangement and vertical slot inlet baffle detail, refer to the API Manual and Figures 18A and 18B.

3.10.4 Induced Gravity Separator. The induced gravity separator removes free and dispersed oil to produce an effluent that has 10 to 50 ppm oil. The oil is removed by passing water at laminar velocity through a pack of closely spaced plates on an incline of 45 to 55 degrees. The oil droplets rise and are trapped along the bottom of the plates. The oil droplets coalesce and gradually move upward along the bottom of the plates, eventually collecting at the surface of the tank. Suspended solids settle to the bottom. The separator should have adequate capacity in the sludge well to collect these solids and should have a sludge pump. An automatic valve, if sludge transfer is by gravity displacement, should be provided and operated frequently to avoid excessive buildup. Refer to Figure 19 for alternative types of induced gravity separators. Specific design features of induced gravity separators vary among manufacturers.

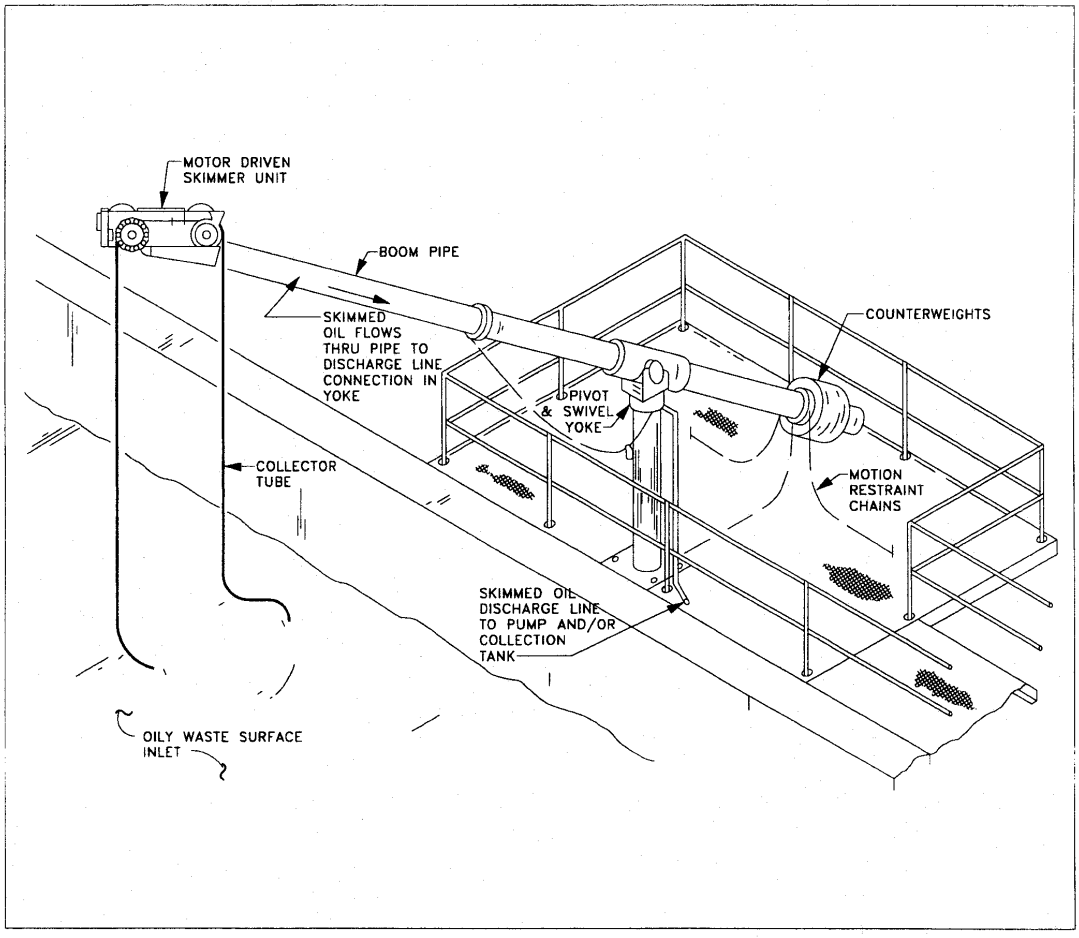

Figure 16
Tube Type Oil Skimmer Installation

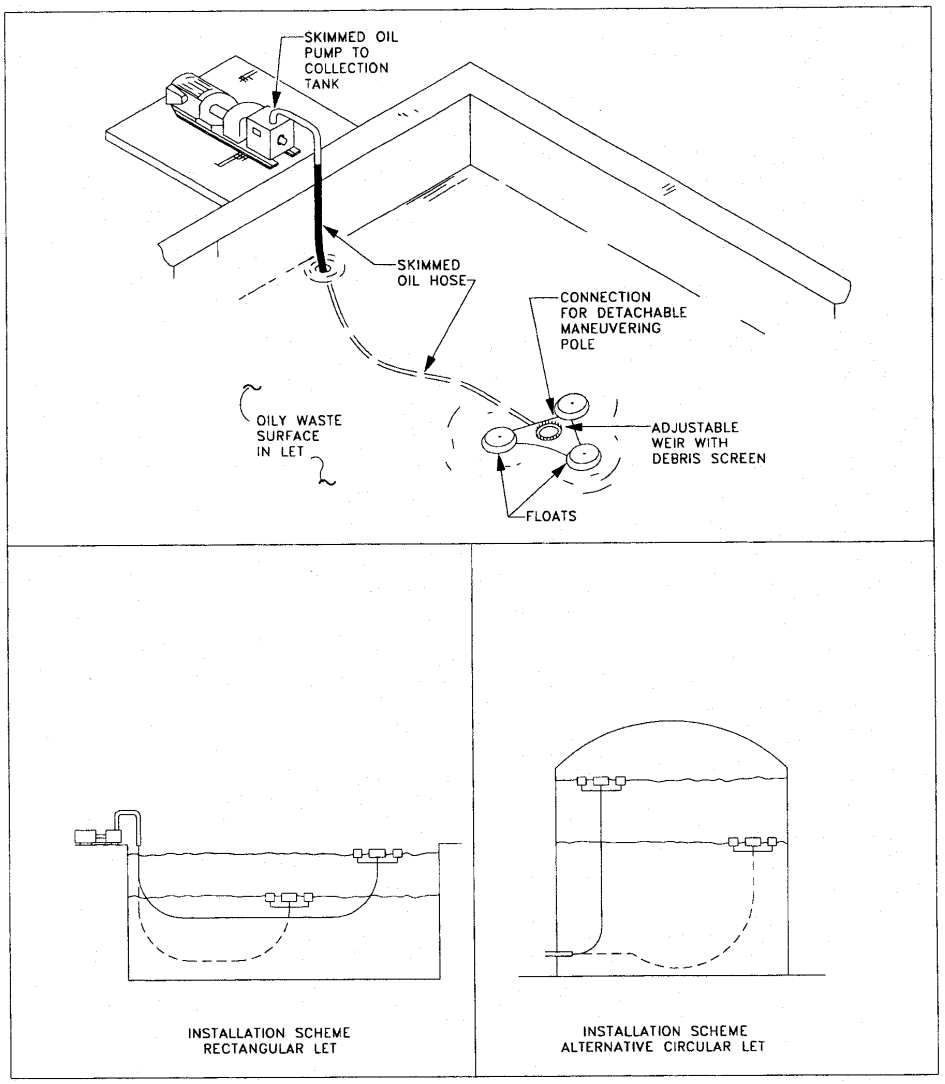

Figure 17
Floating Weir Type Skimmer Installation

Table 14
API Separator Design Criteria

Design Parameter	Design Flow Rate	
	<185 gpm (11.7 L/s)	>185 gpm (11.7 L/s)
[1]Maximum Surface Loading, gpd/ft^2 (L/s-m^2)	[2]1,000 to 2,000 (11.3 to 22.6)	1,000 (11.3)
Length:Width (minimum)	4:1	4:1
Depth:Width	1:1 (maximum)	0.3:1 to 0.5:1
[3]Maximum Depth, ft (m)	3 (0.9)	5 (1.5)
Maximum Horizontal Velocity, fpm (m/min)	2 (0.6)	2 (.06)

[1]Based on maximum 24-hour flow with one tank out of service.
[2]Use lower value if separator is only form of treatment. Use higher value of separator is a pretreatment or intermediate component of a multi-unit treatment system or if effluent quality complies with POTW discharge regulations.
[3]Increase depth to provide oil and sludge storage volume as required.

3.10.4.1 Parallel Plate Separator. Use the wastewater characteristics developed in accordance with Section 3. Refer to paragraphs 3.7.2 and 2.7.4 to design separator for removal of free oil and, if required, suspended solids. Locate units above ground or partially buried. Protect buried units against flooding from surface runoff by locating a minimum of 8 inches (203 mm) above grade. Consider the following during design:

a) Tanks should be fabricated from carbon steel and coated inside and outside with coal tar epoxy. Preferred construction materials for plate packs are a frame of Type 304 stainless steel with individual plates of fiberglass. Refer to

Table 15 for basic design data and Figure 19 for typical plate separator arrangement. The exact dimensions and orientation of the separator (crossflow inclined, crossflow horizontal, and downflow inclined) will vary with separator type and manufacturer.

b) Provide adequate cathodic protection.

c) Minimize hydraulic surge effect on separator by use of variable speed pumps, flow control valves, or by an upstream surge tank with gravity feed through an upstream control orifice.

d) Refer to NFGS-11311 for additional design information.

e) Example Calculation 3 - Determination of required number of plates. Steps are performed first using English units, then using SI units (shown in brackets).

Determine required number of theoretical plates and number of plate packs as follows:

Given: (From Example Calculation 1 preceding):
LET Volume = 490,000 gal (1,854,846 L)

Assume LET contents must be processed through an induced gravity separator in 16 hours.

Influent flow rate to separator (Q_I)

Q_I = 490,000 gal/16 h X 1 h/60 min = 510.416 gpm

[Q_I = 1,854,846 L/16 h X 1 h/60 min = 1932.13 L/min]

Recommended Surface Loading Rate (Q_{SR}):

Q_{SR} = 200 gpd/ft^2 [8149.11 L/day·m^2]

Convert to gpm/ft^2 [L/min·m^2]:

200 gal/day·ft^2 X 1 day/1440 min = 0.1389 gpm/ft^2

[(8149 L/min·m^2) X 1 day/1440 min = 5.66 L/min·m^2

Plate Surface Area (A_p) normally available from manufacturer's data (manufacturer value not available for SI size):

A_p = 20 ft^2/plate [1.85 m^2/plate]

Determine:

Total Plate Area Required (A_t):

$A_t = Q_I/Q_{SR}$ = 510 gpm/(0.1389 gpm/ft^2) = 3,672 ft^2

[A_t = 1932 L/min/(5.66 L/min·m^2) = 338.9 m^2]

Number of Parallel Plates Required (N_p):

$N_p = A_t/A_p$ = 3,672 ft^2/(20 ft^2/plate) = 183.6

[$N_p = A_t/A_p$ = 338.9 m^2/(1.85 m^2/plate) = 183.6]

Use 184 plates, minimum.

3.10.5 Skimming Dam. Locate low dam or weir in drainage channel at least 50 feet (15.2 m) downstream from the nearest storm drain outlet to pond water; provide an open port in the dam to drain the pond in dry weather. Design a port to accommodate estimated dry weather flow. Refer to Figure 20 for details. Use float and boom to trap and divert floating oil and grease to the side of channel. Ensure that floating diversion boom extends at least 3 inches (76 mm) below surface of water. Provide a movable belt skimming device to skim oil to a collection hopper for storage. Design a channel for a maximum horizontal velocity of 12 fpm (3.7 m/min), based on rainfall intensity-duration-frequency curve data for a 1-year frequency storm at the specified geographical location. Contact Federal, State, and local regulatory agencies to determine the adequacy of this storm frequency interval. Consider surrounding topography and drainage basin characteristics when establishing channel dimensions; the minimum length of channel should be 50 feet (15.2 m). Avoid surcharging storm sewer outlets at high water level.

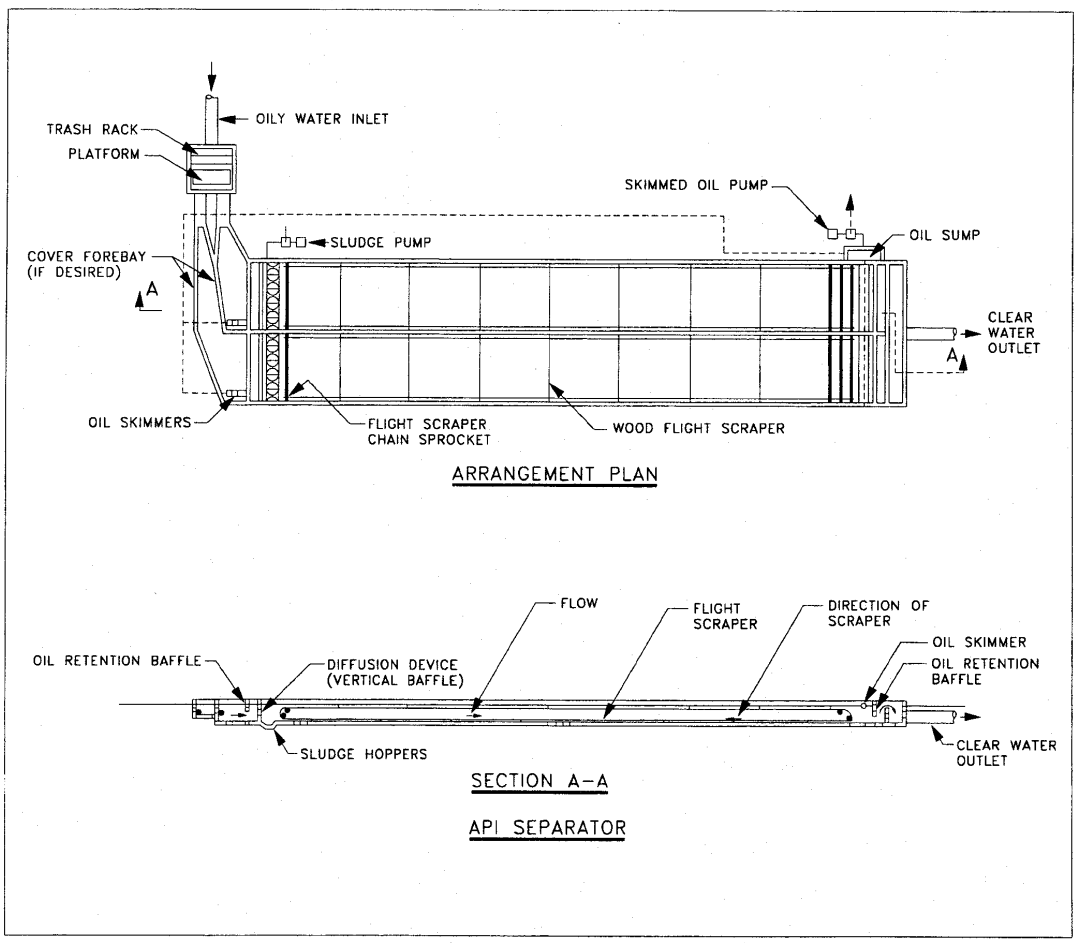

Figure 18A
API Separator

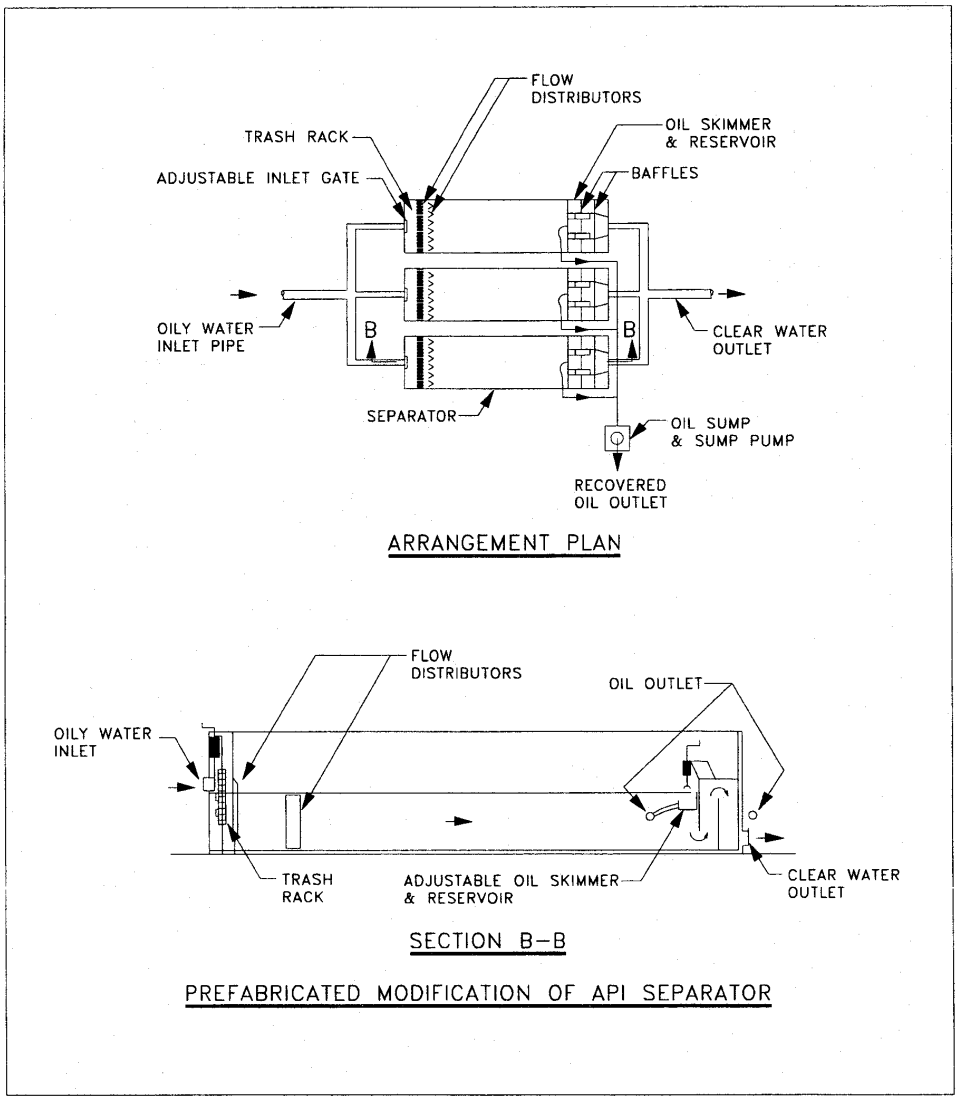

Figure 18B
API Separator

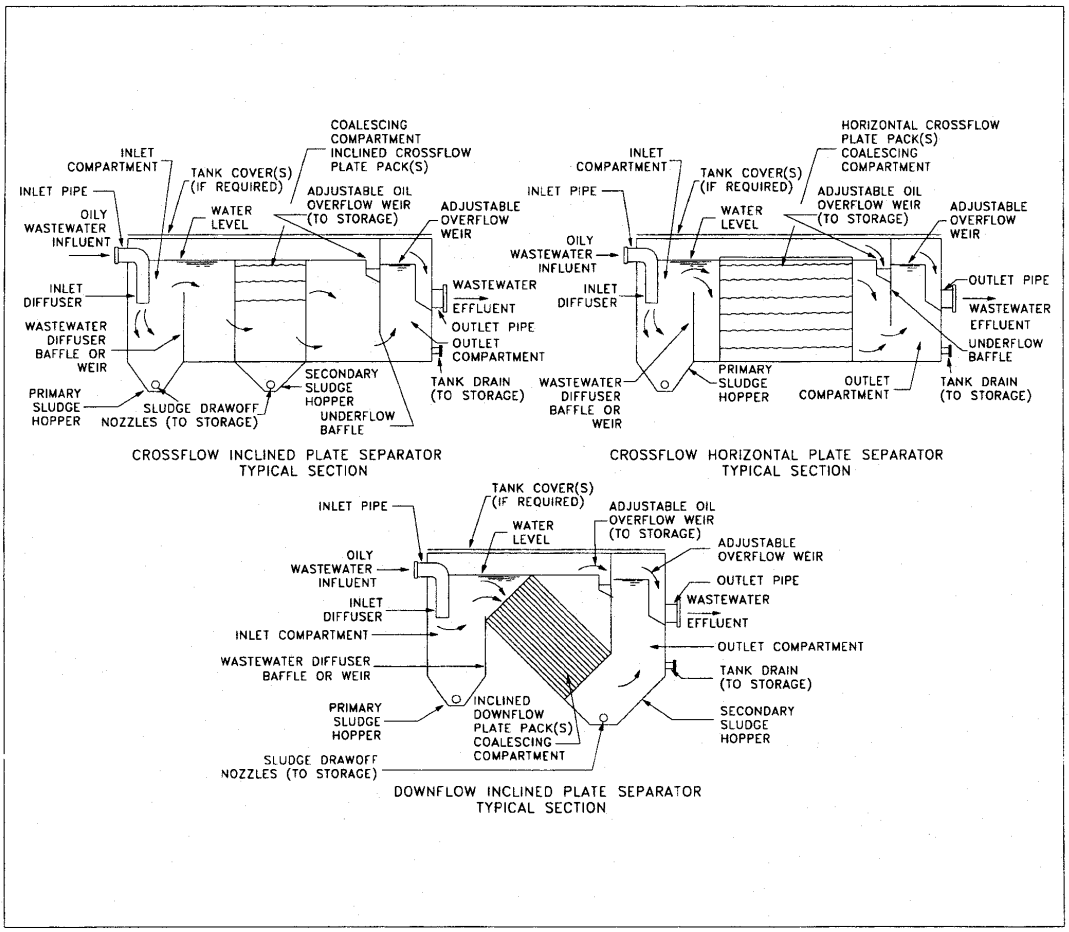

Figure 19
Induced Gravity Separators

Table 15
Parallel Plate Oil-Water Separator Design Data[1]

Design Parameter	Description
Inlet pipe[2]:	
Diameter	6-in.(150-mm) minimum.
Velocity	Use minimum that will avoid suspended solids deposition in pipe. Approximately 2 fps (0.6 m/s) for grit-bearing wastewater.
Diffuser	By manufacturer. Reduce momentum to avoid short-circuiting.
Inlet compartment:	
Dimensions	A function of the flowrate and settleability of the suspended solids. Maximum surface loading rate of 1,000 gpd/ft^2 (28.3 L/min-m^2). Determine actual design surface loading in benchscale experiments.[3]
Primary sludge hopper	Optimum hopper angle of 55° (from horizontal). Do not use slope less than the angle of repose for material removed. Hopper volume determined by volume of suspended solids removed and sludge drawoff schedule. Provide ≥10% of compartment volume.
Primary sludge drawoff	4-in. (100-mm) minimum diameter connection with plug valve.
Diffuser baffle (weir)	By manufacturer. Distribute oily wastewater evenly across packed plate inlet.
Overflow weir	Sharp crested, vertically adjustable, length as necessary to establish laminar flow velocity to plate pack compartment.
Coalescing (plates)compartment:	
Inclined plates	
Plate type	Corrugated preferred.
Spacing	Range: 1/2 in.[4] to 1.0 in. (13 mm to 25 mm)
Angle	Range: 40° to 60° (from horizontal).
Plate pack orientation	Downflow preferred.
Effective separation area[5]	
Downflow	100 to 1000 ft^2 (9.3 to 92.9 m^2) per pack.
Crossflow	270 to 2220 ft^2 (25.1 to 206.2 m^2) per pack.
Loading rate	Determined from bench scale experiments and based on effluent quality requirements. Typically, 100 to 200 gpd/ft^2 (2.8 to 5.7 L/min-m^2).

Table 15 (Continued)
Parallel Plate Oil-Water Separator Design Data[1]

Design Parameter	Description
Number of plates	See Example Calculation 3. Will vary slightly among manufacturers based on plate characteristics and standard pack sizes.
Horizontal plates[6]	
Spacing	1/2 in.[4] to 1.0 in. (13 mm to 25 mm)
Angle	Zero degrees (from horizontal).
Plate pack orientation	Crossflow with respect to corrugations.
Effective separation area	60 ft^2 (5.6 m^2) per pack.
Loading rate	Determined from benchscale experiments and based on effluent quality requirements. Typically, 100 to 200 gpd/ft^2 (2.8 to 5.7 L/min-m^2).
Oil overflow weir	Sharp crested vertically adjustable. If discharge is directly to outfall sewer, provide V-notch weir for flow measurement.
Secondary sludge hopper	Same as primary sludge hopper of inlet compartment.
Secondary sludge drawoff	
Nozzle	4-in. (100-mm) minimum diameter with plug valve.
Underflow baffle	Underflow velocity not to exceed 4 fpm (1.2 m/min)
Outlet compartment[2]:	
Overflow weir	Sharp crested vertically adjustable.
Secondary sludge hopper	Same as primary sludge hopper.
Secondary sludge drawoff	4-in. (100-mm) minimum diameter nozzle.
Underflow baffle	Underflow velocity not to exceed 4 fpm(1.2 m/min).

[1]Refer to manufacturer's product bulletin for equipment descriptions, exact dimensions, and location of appurtenances. Also, refer to NFGS-11311.
[2]Influent invert elevation established by collection system design. Set outlet invert elevation a minimum of 3 in. (76 mm) below inlet invert.
[3]Average rate to be used for preliminary unit sizing only. Supply manufacturer with oily wastewater flow and characterization data described previously in this section to determine actual design loading rate.
[4]Plate spacing <1/2 in. (13 mm) not recommended due to inherent presence of suspended solids.
[5]Actual effective separation area is a function of the plate angle, corrugation dimension, and plate dimension.
[6]Limited effectiveness in preventing reentrainment of suspended solids in wastewater stream since sludge storage hopper not an integral part of standard equipment.

3.10.5.1 Diversion Pond. A skimming dam does not remove oil immediately from the flow since it relies on the oil skimmers. It is sized for a relatively small storm event to minimize the backwater effect in the storm drainage channel. Use a separate diversion pond to accommodate potential large oily waste spills and more intense storm events. This prevents washout of the oil over the skimming dam before it can be removed. See Figure 21 for details.

3.10.6 Dissolved Air Flotation (DAF) and Induced Air Flotation (IAF). The DAF unit removes emulsified oil and suspended solids through the use of chemical coagulants and rising air bubbles. The coagulants cause the minute oil droplets and solids to agglomerate into larger floc particles. The air bubbles adhere to these particles causing the floc to rise rapidly to the surface. The DAF unit is usually installed above ground and will often require pumping of influent flow. The DAF unit is divided into two sections. The influent enters a flocculator chamber where it is mixed with coagulant demulsifiers. The oily waste then flows into the flotation section. This section has a skimmer on the surface to remove the scum and an outlet to remove the settled sludge from the bottom by gravity displacement or pumping. Refer to Figure 22 for a schematic representation of a DAF unit.

A similar system to the DAF is the IAF which will remove emulsified oil, heavy metals and suspended solids (agglomorates) from oilywaste water influent. This system produce ultra-fine gas bubbles much smaller than conventional mechanical and hydraulic flotation cells. The smaller bubbles liberated from relatively high gas intake volumes provide large surface area contacting potential for the agglomorates to rise to the liquid surface. The agglomorates laden froth is radially dispersed to the peripheral skim trough and then removed from the vessel on an intermittent cycle. The skid mounted system is compact in size and light weight which makes it more ideal for some applications.

3.10.6.1 Pressurization Method. Introduce dissolved air to the DAF or IAF by recycle and by pressurizing a portion of the effluent using infused air. Mix recycles with flotation tank contents.

a) Equipment. Use a back pressure inductor in the recycle pump inlet line to infuse air into the recycle stream. The flow through the inductor creates a partial vacuum in a side port drawing in atmospheric air. This system is mechanically simpler and lower in maintenance and operating cost than a compressed air system.

b) Bubble Size. The air pressure used in flotation determines the size of the air bubbles formed. Air bubbles < 100 µm in size are the most suitable for being adsorbed and entrapped by the chemical floc and oil globules. An excessive amount of air can destroy the fragile floc formed in the flocculator, resulting in poor performance.

c) Recycle. Recycle of a portion of the clarified effluent allows a larger quantity of air to be dissolved and dilutes the feed solids concentration. Dilution reduces the detention period necessary to achieve good separation.

3.10.6.2 Design Parameters. The principal design variables for DAF or IAF are shown below. Most of these parameters will be specified by the equipment manufacturer.

Design Parameter	Design Value
Pressure	40 to 60 psig (276-414 kPA)
Recycle ratio	30 to 70%
Feed solids concentration	0.5 to 5 $lb/ft^2/h$ (2.0 to 20.1 $kg/m^2/h$)
Detention period	10-30 min.
Air-to-solids ratio	0.02:1 to 0.05:1
Hydraulic loading	1.0 to 3.0 gpm/ft^2(40.7 to 122.2 $L/min{\cdot}m^2$)
Chemical aids	Determined by field testing
Depth to width or diameter ratio	0.4:1 to 0.8:1

Specify performance of DAF or IAF unit to include oil removal efficiency and effluent oil concentration at expected unit operating conditions (air, solids, hydraulic loading, pressure, and detention period) with or without chemical addition.

3.10.6.3 Chemical Conditioning. Chemical aids, or coagulants, are used to allow individual droplets of emulsified oil to agglomerate into a larger floc, which is more easily separated from the water. Materials used as coagulants include alum, ferric chloride, sulfuric acid, lime, organic polyelectrolytes, and combinations of inorganic and organic polyelectrolytes. Organic coagulants generally produce a better quality effluent, often require lower dosages, and reduce the amount of sludge generated by 50 to 75 percent. Bench scale studies should be performed to identify the optimum coagulant or combination of coagulants and determine dosage rate. (Refer to paragraph 3.10 for a detailed discussion of treatment chemicals.)

3.10.7 Polishing Treatment Alternatives. The purpose of the polishing step is to reduce the oil content to less than 10 ppm so that the effluent may be discharged to navigable waters. Multimedia filtration followed by activated carbon adsorption are the most practical processes. Coalescing filtration units require less surface area per increment of flow capacity and may be preferred for site-specific land constraints. This may be especially true in colder climate areas where much of the treatment system equipment will be installed indoors and building size must be minimized. Since the polishing step is critical to meeting effluent requirements, duplicate units for 100 percent redundancy must be provided.

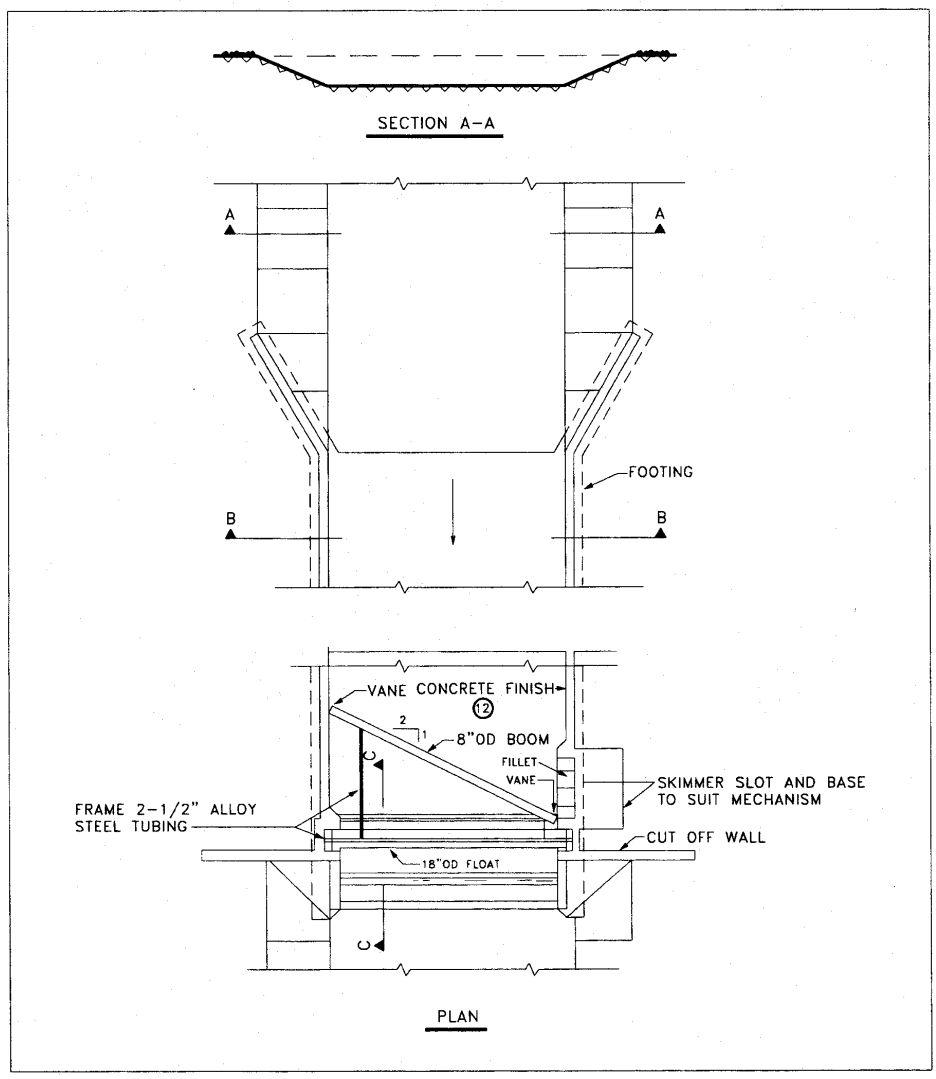

Figure 20A
Skimming Dam Details

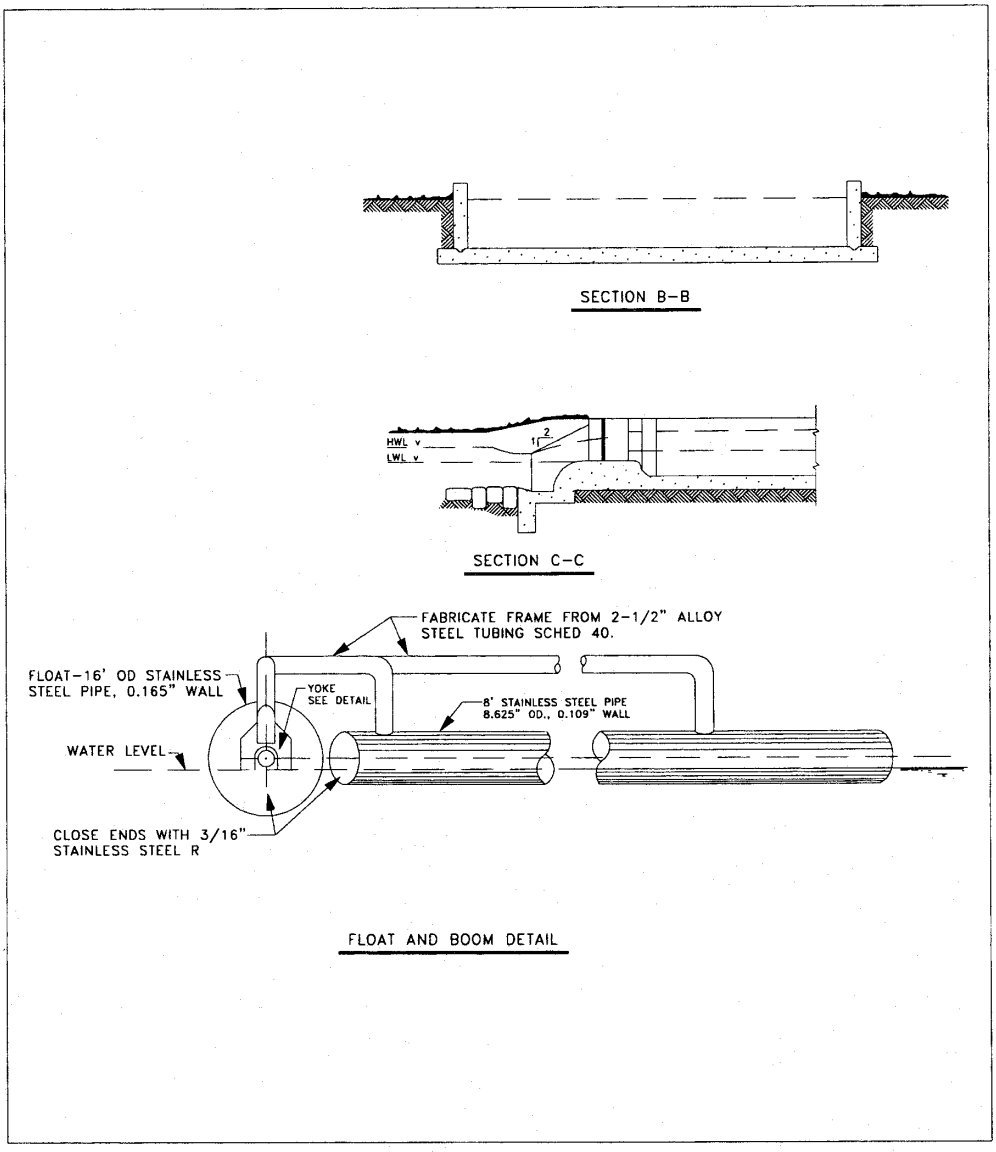

Figure 20B
Skimming Dam Details

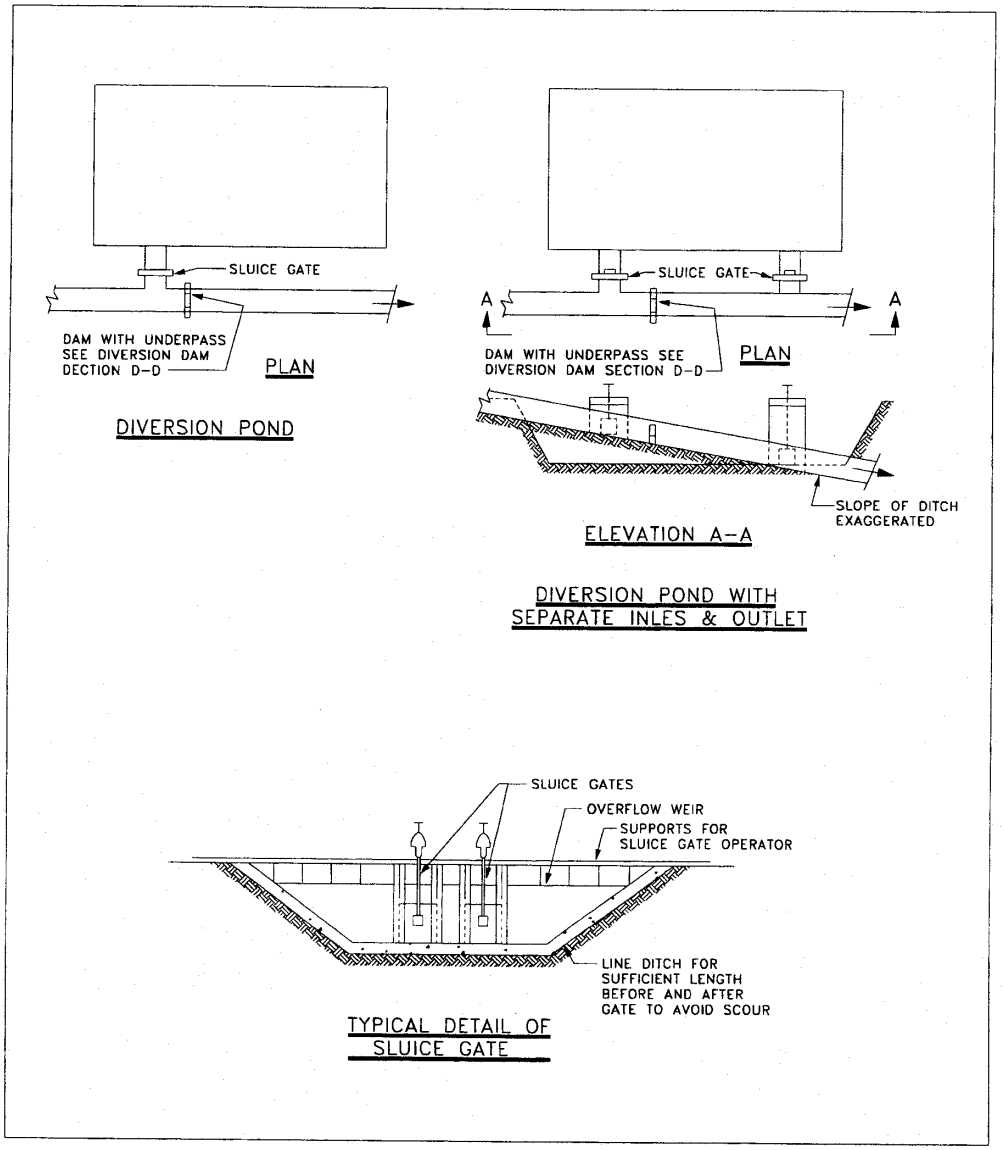

Figure 21A
Diversion Pond Details

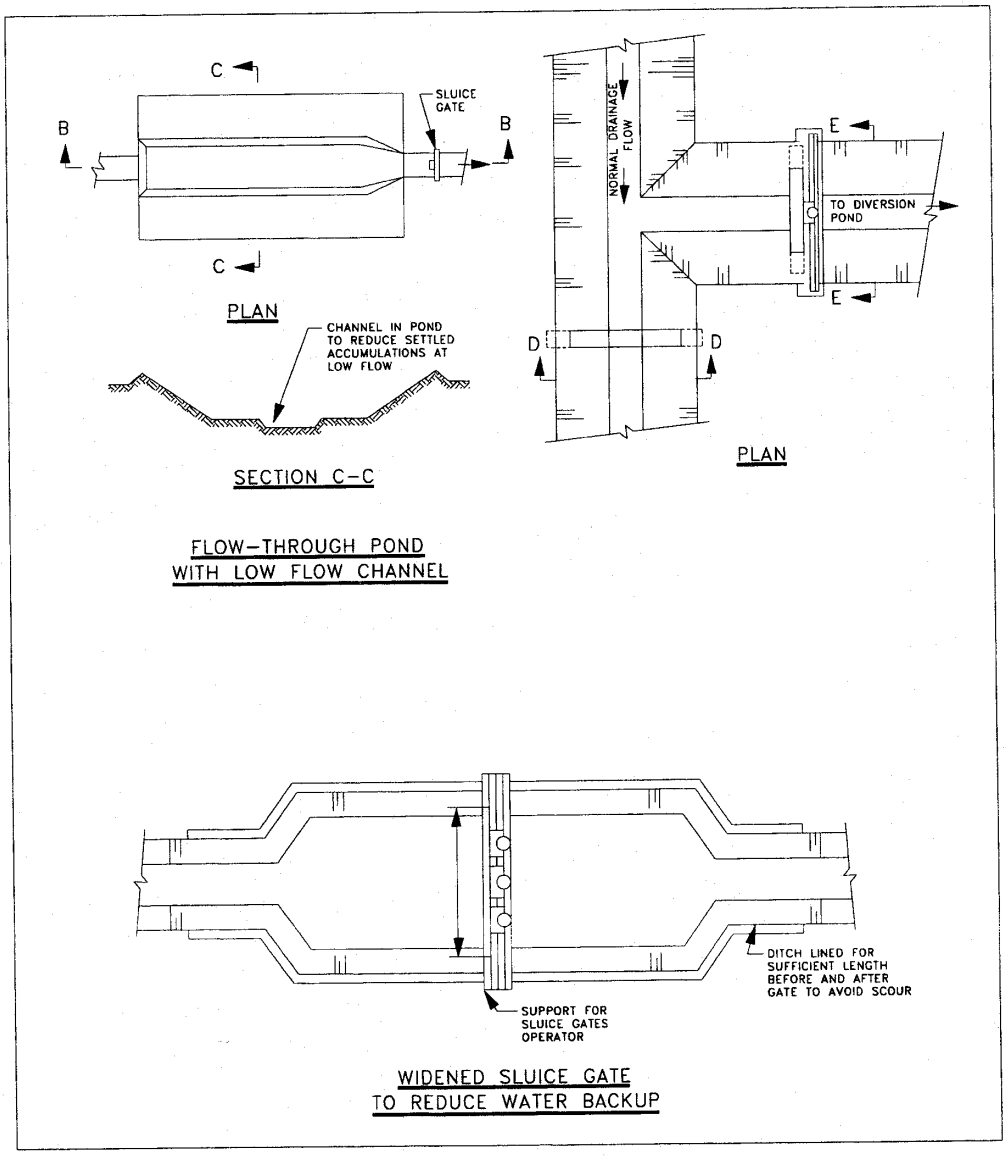

Figure 21B
Diversion Pond Details

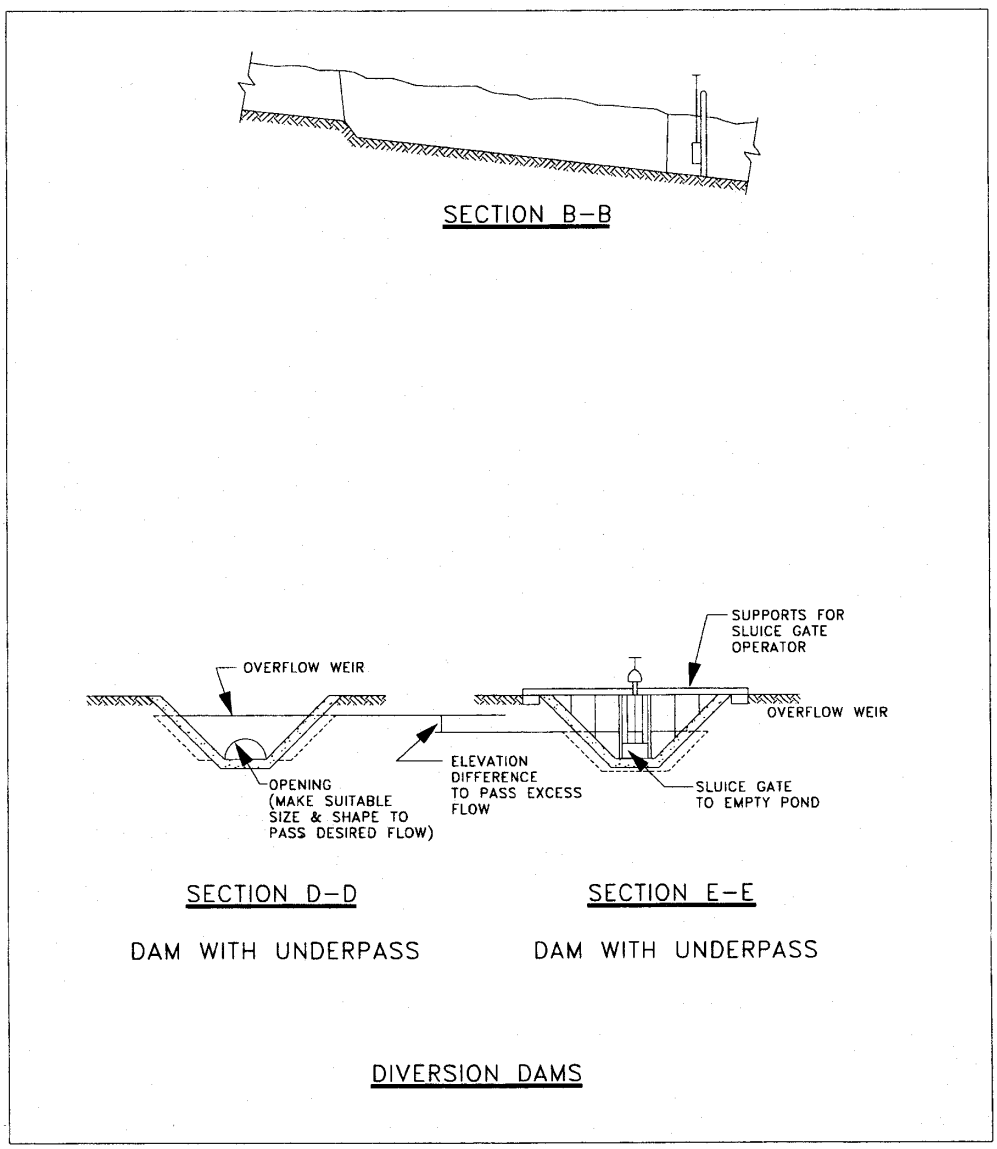

Figure 21C
Diversion Pond Details

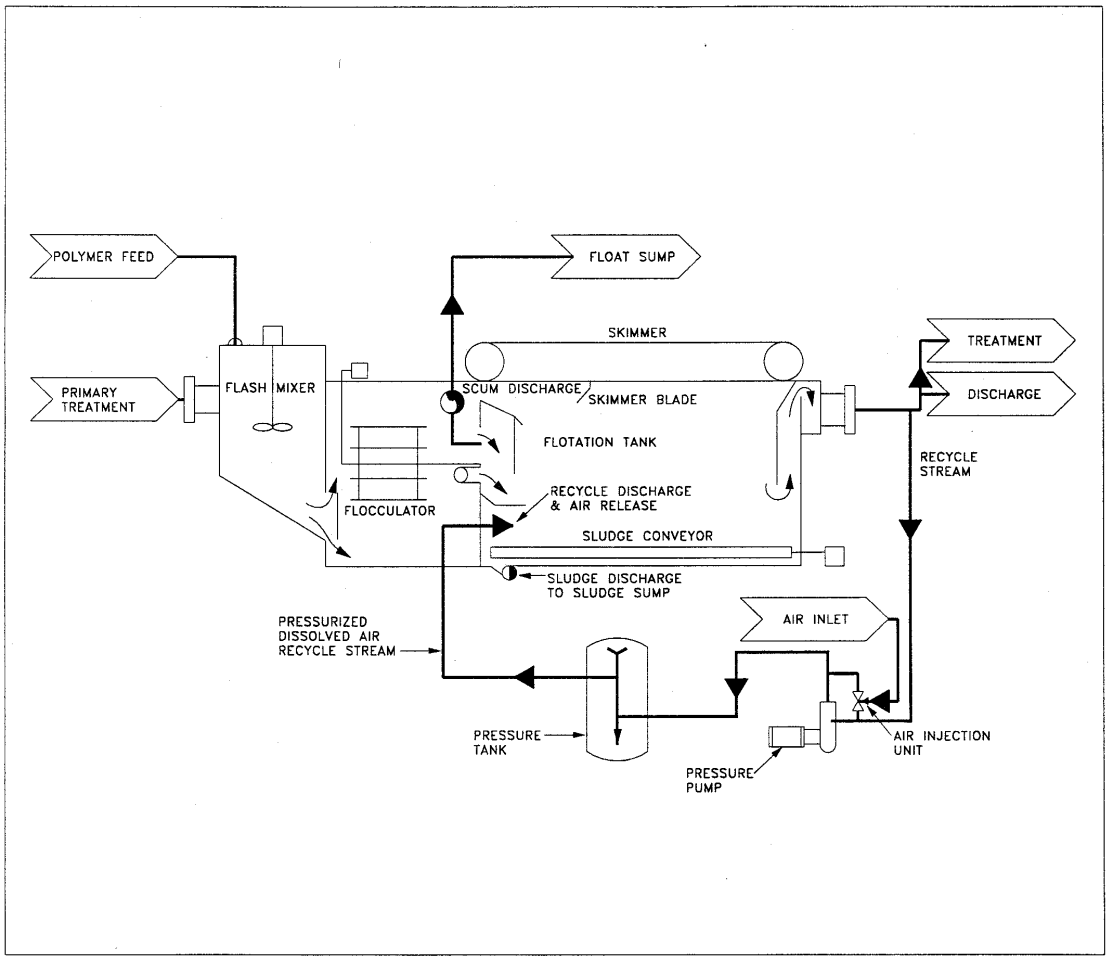

Figure 22
Schematic of Dissolved Air Flotation Oil - Water Separator

3.10.7.1 Multimedia Filtration. Systems are available that operate by gravity or under pressure. Select equipment on basis of operating costs and the availability of space for installation. Pressure filters operate at higher loading rates and require less installation area than gravity units with comparable capacity. In colder climates, consider enclosing the system indoors. The system should have automatic backwashing capabilities, initiated by sensing a predetermined head loss across the filter bed. Treated effluent is normally recycled for surface wash and backwash water supply. A suitably sized reservoir should be provided downstream from the filtration unit to hold the required volume of effluent for the backwashes. Backwash wastewater should be recycled to either the LET, DAF, or IAF unit. Depending on the desired flow configuration, adequate capacity must be included in either the LET, DAF, or IAF unit to receive the periodic backwash recycles flows. Refer to Figure 23 for typical sections of gravity and pressure multimedia filtration units, respectively.

a) The principal design variables for multimedia filter design for oily waste treatment are as follows:

Design Parameter	Design Value
Bed depth	24-36 in. (610-914 mm)
Filtration rate	
Gravity	3-8 gpm/ft^2 (122-326 L/min·m^2)
Pressure	12-18 gpm/ft^2 (489-733 L/min·m^2)
Backwash rate	15-20 gpm/ft^2 (611-815 L/min·m^2)
Air scour flow rate (if necessary)	3-6 sft^3/min/ft^2 (0.9-1.8 m^3/min/m^2) @ 12 psig (83 kPa)
Filter media	Combination sand, gravel, anthracite (garnet optional)
Pressure drop	
Clean	2-4 psig (13.8-27.6 kPa)
Loaded	8-12 psig (55.2-82.7 kPa)
Filter solids loading	2-6 lb/ft^2/hr (9.8-29.3 kg/m^2·hr)

b) Pilot studies are essential in selecting the optimum filter. Design should be based on economic tradeoffs between filter size, operating head requirements, and run length for a specific effluent quality. Refer to EPA PB 214551, Process Design Manual, Suspended Solids Removal, for methodology for making this comparison.

c) Gravity filter tanks can be constructed of either reinforced concrete or carbon steel. Pressure filters are normally prefabricated package units built in carbon steel pressure tanks. Carbon steel tanks should be specified to have both interior and exterior surfaces blast cleaned, prime coated, and finish coated with a coal-tar epoxy.

3.10.7.2 Coalescing Filtration. A coalescer system consists of a prefilter followed by two stages of coalescer elements. The prefilter removes free oil and solids and can be either a mechanical pack or disposable cartridges. The coalescing elements, often cartridges, remove dispersed and some emulsified oil to below 10 ppm. Eventually, the elements become blinded and must be replaced.

a) Equipment. Coalescing filtration units are available as prefabricated package units. Specify tankage fabricated of carbon steel with interior and exterior surfaces blast cleaned, prime coated, and finish coated with a coal-tar epoxy system. Specify maximum use of stainless steel for internal components including mechanical coalescer packs, piping, and cartridge and filter supports or brackets. Prefilter and coalescer cartridges are manufactured from a variety of synthetic, noncorrosive materials. Figure 24 shows a typical arrangement of components for a coalescing filtration unit.

3.10.7.3 Activated Carbon Adsorption. Polishing of oily wastewater by activated carbon adsorption produces effluence of high quality containing less than 10 mg/L oil and grease and low levels of dissolved organics. A large number of compounds listed as toxic on EPA’s priority pollutants lost are amenable to removal by this treatment.

The optimum use of carbon columns as a treatment process requires the development of design parameters from a detailed laboratory pilot-scale treatability investigation with the wastewater under consideration. Pilot scale studies should determine the necessary design parameters for sizing of a carbon contact system. The design parameters include type of carbon, breakthrough and head loss characteristics, and pretreatment requirements.

The main components of an adsorption system, as shown in Figure 25, include two or three adsorption columns packed with activated carbon, liquid transfer pumps, valves, basic instrumentation for pressure and liquid flow monitoring, and backwashing provisions. Periodic backwashing is required to remove accumulated suspended solids. To minimize backwashing, the column influent should be pretreated to maintain suspended solids at less than 50 mg/L. These levels of suspended solids are normally achieved by polishing in multimedia filters prior to carbon adsorption.

Periodic regeneration of activated carbon is necessary at the exhaustion of adsorption capacity. For most oily waste treatment plants, a vendor-provided regeneration service should be investigated. Onsite regeneration is economical for very large industrial or domestic wastewater plants where carbon usage is more than 1,000 pounds/day. For oily wastewater plants with continuous operation, supplying two or more columns instead of one large column capable of handling the entire flow should provide adequate redundancy. For batch operated plants, redundant capacity is not needed as maintenance or carbon replacement can be scheduled during plant shutdown. The contacting system can be pressurized or operated under gravity. The pressurized systems are generally more flexible and can be operated at a higher head loss.

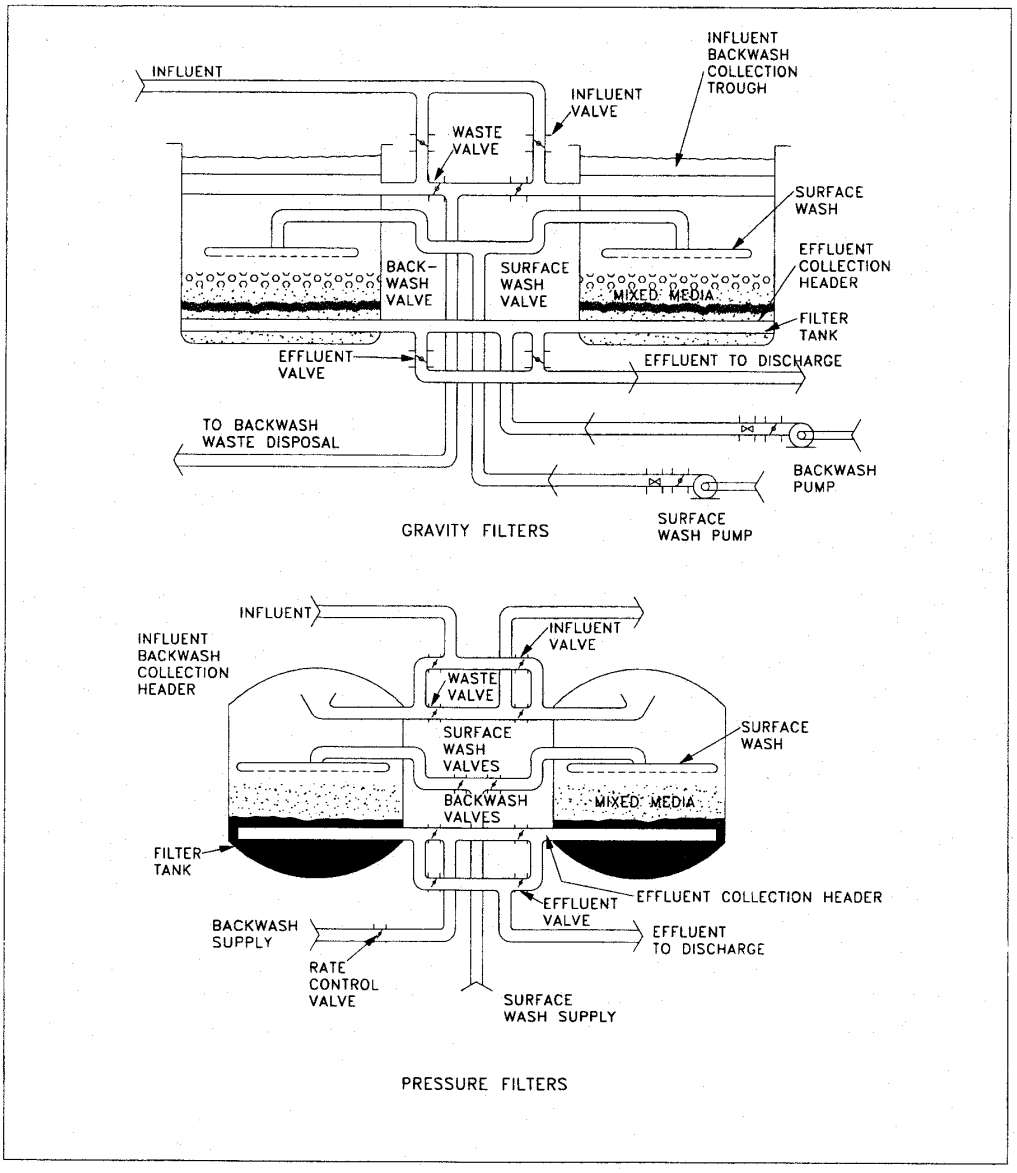

Figure 23
Mixed Media Filtration

Usually, carbon columns are designed with hydraulic loadings of 2 to 10 gpm/ft^2 (81.5 to 407.5 L/min·m^2) for carbon beds 10 to 30 feet (3.05 to 9.1 m) high. Bed height-to-diameter ratio varies from 1:1 to as high as 4:1. The higher rations are needed for columns operating without flow distribution systems.

3.10.8 Sludge Dewatering and Disposal. The solids that settle to the bottom of the LETs, gravity separators, and DAF/IAF must be removed periodically. In addition, the scum that accumulates at the surface in the DAF/IAF must also be disposed. Oily sludges may contain considerable quantities of heavy metals and organic toxic chemicals. Inorganic coagulants such as lime and alum used in wastewater treatment also increase sludge generation. These sludges may be classified as toxic wastes and must be dewatered (regardless of toxicity) to minimize transportation and disposal costs and comply with typical disposal site criteria. Sludge drying beds or mechanical dewatering equipment are the preferred method of sludge dewatering.

The efficiency of dewatering can be improved by sludge conditioning prior to dewatering. The common processes include chemical and thermal conditioning. Chemical conditioning by polyelectrolytes is more suitable for oily waste plants as it requires less capital and O&M costs and the process hardware is less complex as compared to thermal conditioning. However, chemical conditioning requires an investigation to select the type and feed rates of chemicals. Inorganic conditioning chemicals are also considered effective, but they increase the quantity of sludge and increase disposal cost as compared to organic polyelectrolytes.

The water fraction from dewatering oily sludges is to be transferred to the LETs.

3.10.8.1 Sludge Drying Beds. Sludge drying beds are the preferred alternative if the treatment facility is located in a suitable climate. Sludge drying beds are considerably less expensive to design, construct, operate, and maintain as compared to mechanical dewatering devices. Their performance is not affected by variable solids/moisture content in sludges.

Design and use of drying beds are influenced by: (1) meteorological and geological conditions; (2) sludge characteristics; and (3) use of sludge conditioning aids. Climatic conditions are the most important. The amount and rate of precipitation, percentage of sunshine, air temperature, relative humidity, and wind velocity are factors that determine the effectiveness of air drying.

The following general design characteristics are recommended for drying beds:

a) Basis of Sizing. Provide at least 1.5 sq. ft (0.14 sq. m) of drying bed per 1,000 gpd (3785 L/d) of oily waste flow. Provide duplicate units for 100 percent redundancy. Individual bed area should not exceed 2,000 sq. ft (186 sq. m). If more than 2,000 sq. ft (186 sq. m) is required, provide two beds each with 50 percent of the required design area and two equally sized beds for redundancy requirement.

b) Bed Characteristics. If available land is limited, consider use of premolded, polypropylene screen modules to replace sand bottom. These beds require 1/6 to 1/10 the area of sand beds. Alternatively, consider vacuum assist or solar assisted drying for conventional sand bottom beds.

Drying beds usually consist of 10 to 30 cm of sand that is placed over 20 to 50 cm of graded gravel or stone. A recent study indicates 40 cm of sand to be preferred for mechanically cleared beds. The sand typically has an effective size of 0.3 to 1.2 mm and a uniformity coefficient of less than 5.0. Gravel is normally graded from up to 2 cm.

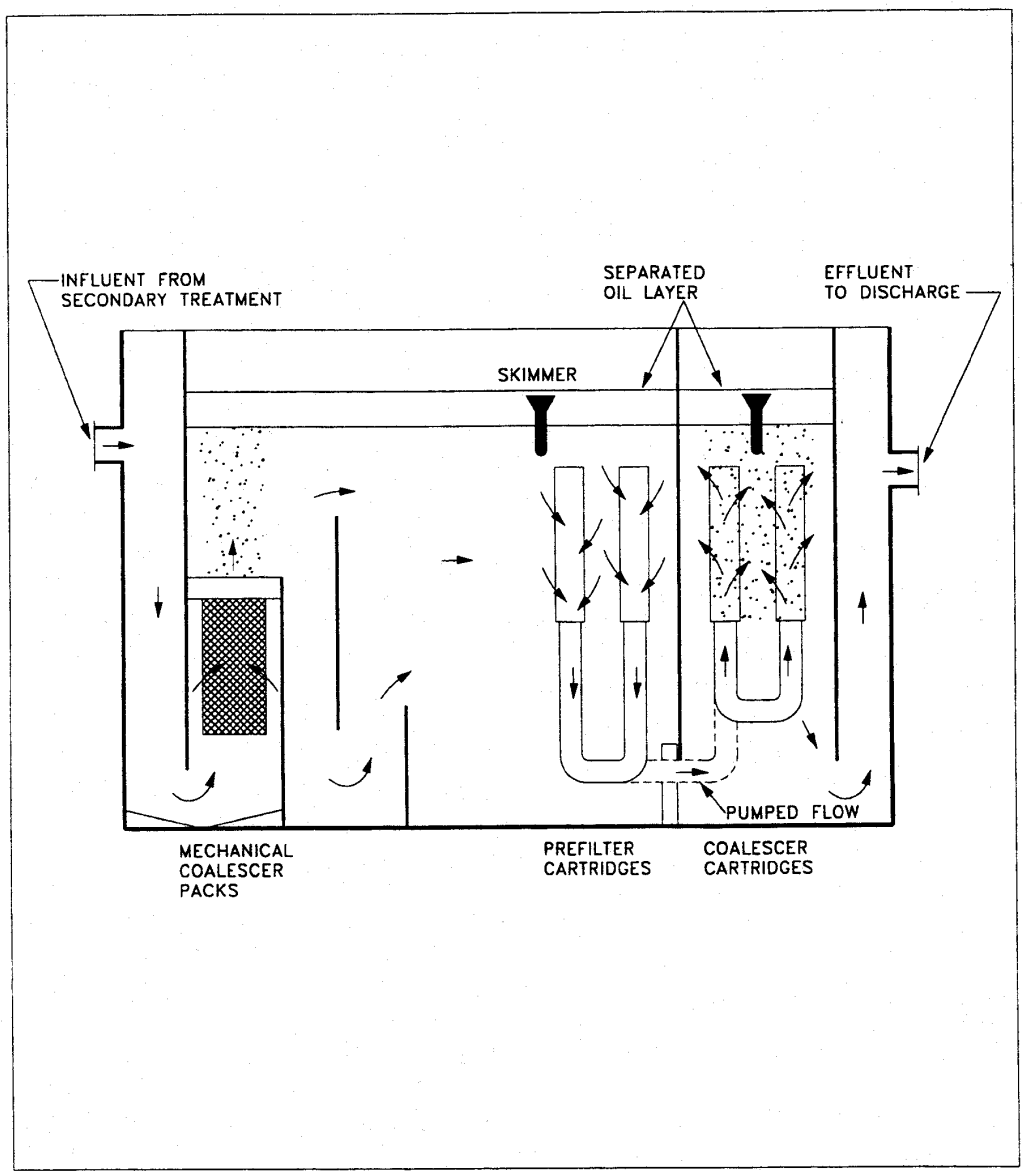

Figure 24
Schematic of Coalescing Filter

The top 3 inches (7.5 cm) of gravel should consist of 1/8 to 1/4 inch (0.3 to 0.6 cm) gravel. The gravel should extend at least 6 inches (15 cm) above the top of the underdrains. Drying beds have underdrains that are spaced from 10 to 26 feet (3 to 8 m) apart. Underdrain piping is often vitrified clay laid with open joints, has a minimum diameter of 10 cm, and has a minimum slope of about 1 percent. Collected filtrate is returned to the treatment plant. Bed walls should be watertight and extend 15 to 18 inches (38.1 to 45.7 cm) above and at least 6 inches (15 cm) below the surface. Outer walls should be curved to prevent soil from washing onto the beds. Pairs of concrete truck tracks at 20-foot (6.2-m) centers should be provided for beds. The influent pipe should terminate at least 12 inches (30 cm) above the surface with concrete splash plates provided at discharge points.

A recent trend in handling sludge in drying beds is the increased use of mechanical lifting equipment for sludge handling. Chemical conditioning greatly aids the dewatering process. In many reported instances, flocculent chemicals have overcome problems in drying beds.

c) Covers. Sand beds cab be enclosed by glass or other material where justifiable to protect the drying sludge from rain, to control odors and insects, and to reduce the drying periods during cold weather. Good ventilation is important to control humidity and optimize the evaporation rate. As expected, evaporation occurs rapidly in warm, dry weather. Adaption of sludge removal and handling equipment to enclosed beds is more difficult than to open drying beds.

3.10.8.2 Drying Lagoons. Drying lagoons are technically and operationally simple for sludge dewatering. The cost factor depends on land availability. Since there are a fair number of applicable regulations (such as mandatory monitoring of ground water) to be taken into consideration, there is a higher risk involved in choosing this method.

Some common design criteria are: the soil must be reasonably porous, and the bottom of the lagoon must be at least 18 inches (45 cm) above the maximum ground water table. Surrounding areas must be graded to prevent surface water from entering the lagoon. The lagoon depth should not be more than 24 inches (61 cm). At least two lagoons should be provided.

Sludge usually will not dewater in any reasonable period of time in lagoons (to the point that it can be lifted by a fork except in an extremely hot, arid climate). If sludge is placed in depths of 15 inches (36 cm) or less, it may be removed and dewatered in 3 to 5 months.

3.10.8.3 Mechanical Dewatering and Disposal. Consider filter press equipment in locations where sludge drying beds cannot be used.

a) Bag Filters. In smaller facilities where sludge production is low, bag type filter presses should be considered. They dewater by moisture displacement under pressure from influent liquid sludge. Bag type filter presses generally dewater to about 50 percent moisture content. They are mechanically simple and require little maintenance other than periodic cleaning. The operation is normally manual and requires continuous operator attention to start and stop the process, and to empty and replace the filter bag. They are small, portable, and require little floor space for a permanent installation.

b) Filter Press. For larger facilities with higher sludge production, consider a plate and frame (or diaphragm) filter press. A plate and frame press will require high lime dosage. As an alternate, select type and feed rate of organic polyelectrolyte. Use a diatomaceous earth precoat filter to minimize oil blinding of the filter fabric. Consider high-pressure air or steam cleaning of the fabric in a regular operating cycle. Consider operational problems of media blinding and cake handleability in selection of the filter press, as for other mechanical dewatering equipment.

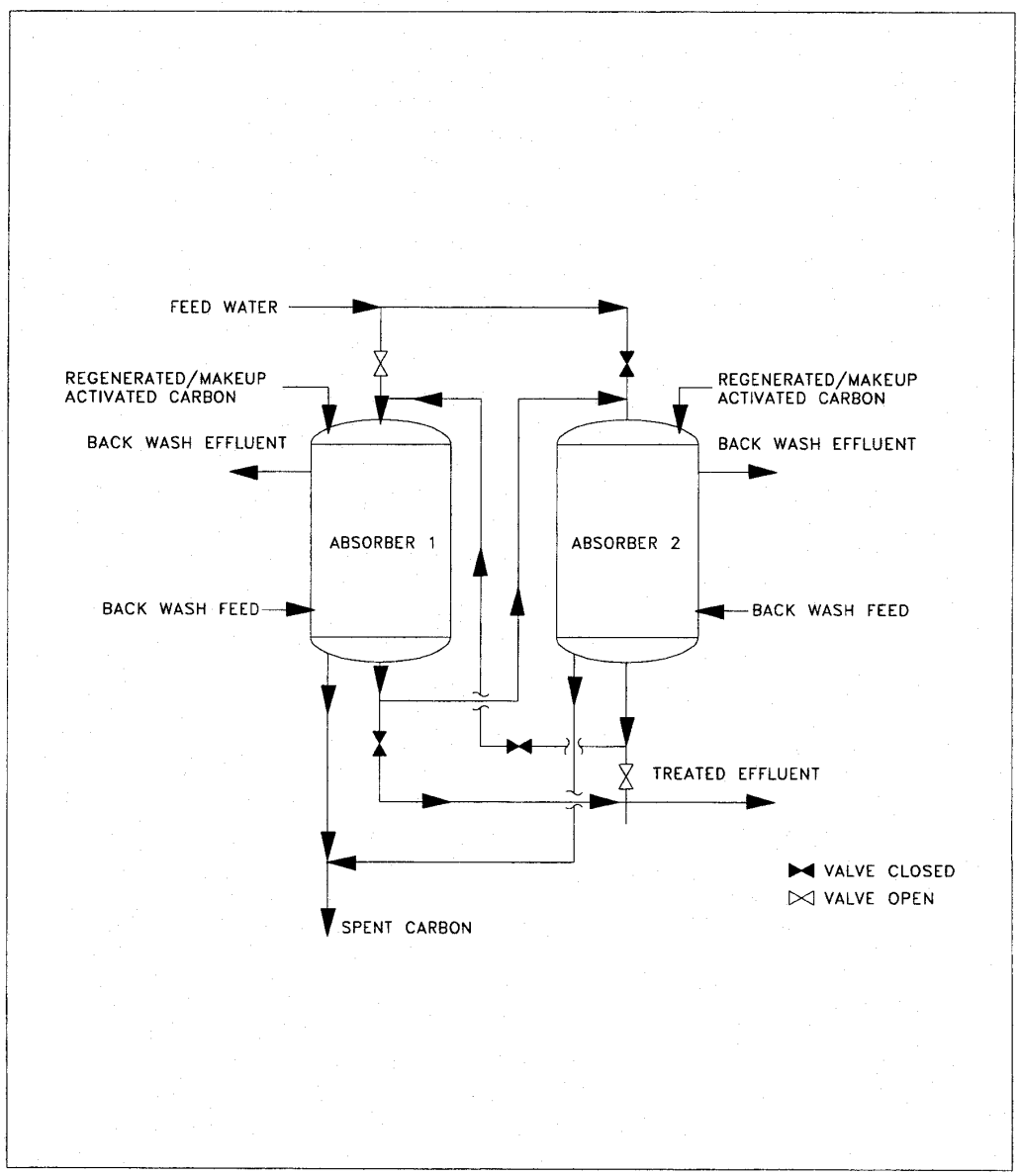

Figure 25
Two-Vessel Granular Carbon Adsorption System

A pressure filter consists of metal plates covered by a fabric filtering medium. The covered plates are hung in a frame equipped with both a fixed and a moveable head. The plates are forced together with a chamber left between the cloth surfaces. Sludge is pumped through a central opening in the plates to the cloth-lined chamber. Sludge is retained on the fabric and liquid is forced through the fabric to the plate surface where it drains away. At the end of the filtration cycle, the plates are separated, and the sludge cake is discharged from the unit. Feed pressures ranging between 80 and 225 psig are common. Filter presses achieve 40 to 50 percent solids concentration.

c) Belt Filter Press. For larger facilities with higher sludge production consider a belt filter press. The performance of belt presses depends on factors such as conditioning, maximum pressure, and number of rollers. Determine polymer type and required dosage for sludge conditioning by bench scale or pilot plant tests. Consider the effect of oil blinding of media and methods and efficiency of media cleaning in equipment selection and specification. Consider handleability of sludge cake and cake discharge characteristics in equipment selection and specification.

A belt type filter press will normally produce a sludge cake with 60 to 70 percent moisture content. The units are mechanically complex and require frequent maintenance attention to check and adjust roller clearances and lubricate roller bearings. However, full time operator attention is not required during operation. Since sludge cake is discharged continuously, a conveyor belt might be required to carry off the sludge to a storage area.

d) Vacuum Filtration. There are three commonly used vacuum filtration units that may be considered: rotary drum, rotary belt, and coil filters. A typical rotary drum filter installation consists of a horizontal compartmented drum, which supports the filter media on its outer surface. The drum is rotated, partially submerged, in a tank containing the sludge. As each section of the drum passes through the tank, a vacuum pulls the liquid inward and the solids are retained as a thin cake on the filter media covering the outer drum surface.

The belt vacuum filter represents a recent improvement in continuous rotary vacuum filtration. Rather than being fixed to the drum, the filter medium belt is wrapped around the face of the drum. The belt leaves the drum at approximately the two o'clock lock position and is transported over a roll and wash system which serves three purposes: cake washing, medium washing, and belt alignment (prior to its being placed back on the drum).

The coil filter is similar in many respects to the belt filter except that metal coil springs are used in place of a filter belt. The metal coil springs are constructed of stainless steel and are arranged in two layers in corduroy fashion around the drum face. The coils, having approximately 10 percent open area, do not function as a filter medium, but as support for the filter medium developed from sludge solids.

Vacuum filtration apparatus is a complex system that includes the following components: sludge feeding and conditioning components, vacuum pump and receiver, vacuum filter, and filtrate pump.

3.10.8.4 Sludge Disposal. The toxic characteristics of oily sludges are specific to the oily waste treatment facility where they are generated. An increase in the types of these sludges is expected to be classified as hazardous due to the adoption of the more stringent TCLP method for sludge toxicity characterization. Consequently, these sludges will require handling and disposal under RCRA. The final disposal of these sludges must be in accordance with the applicable State and Federal regulations.

One alternative for sludge disposal is by contract haul. It should be evaluated, particularly for small plants located close to the disposal sites. Other disposal techniques are as follows:

a) Ultimate Disposal Options (Conventional). Land applications and land-farming are current methods used for the disposal of oily sludge. The mineral and organic matter and microorganisms present in soil, chemically and biologically degrade oily sludges. Raw oily sludge is mechanically spread and worked into the soil for improved performance. These techniques require large land areas as the degradation process is slow. These processes are being subjected to increasingly stringent environmental regulations so it is necessary to check with local and Federal regulations when disposing of hazardous oily sludges in this manner. Further information on these techniques may be found in NAVFAC P-916.

b) Ultimate Disposal Options (Unconventional). Less conventional methods for the ultimate disposal of hazardous wastes are likely to become more prevalent as rising costs of conventional disposal methods become prohibitive. These methods include encapsulation or solidification of sludge, followed by disposal in a conventional site rather than a hazardous waste site. Silicate materials, lime, cement, or gypsum are mixed with the sludge and are allowed to set for a short time. The setting time and the selection of the materials should be based on laboratory scale evaluation. High concentrations of sulfates in sludge may interfere with the process.

c) Thermal Degradation. Thermal degradation methods, such as incineration and co-firing, can be used for sludge disposal. Thermal degradation is not the ultimate method of disposal. It produces three secondary streams (effluents): flue gas (air), scrub water, and ash. Each effluent requires additional treatment. Thermal degradation methods are technically and operationally very complex, and associated costs are high. The hazardous waste reduction by thermal degradation methods is controlled by a series of Federal laws (RCRA, Clean Air Act, Clean Water Act, Toxic Substances Control Act (TSCA)) as well as State regulations and local ordinances. Currently, due to high cost, technical complexity, and extensive regulations, this is the last alternative to be considered.

3.10.9 Oil Reclamation. Oil is recovered in the LET and the induced gravity separator and should be reclaimed. Emulsified oil may also be reclaimed but requires further treatment to destabilize the emulsion. Oil reclaimed from oily waste treatment plants can be used for boiler fuel if it meets specifications.

3.10.9.1 Demulsification. Oils contaminated with water, or heavily emulsified (usually water-in-oils emulsion, but may be oil-in-water) may be demulsified sufficiently to produce fuel oil reclaimed quality oil. The most common method is that of organic demulsifying agents or polymers used in conjunction with heat. Some emulsions respond better to various filtration techniques, such as the use of a precoated plate and frame filter. However, this technique often requires the emulsion to be pretreated with a “conditioner” for filtration to be a success. Bench scale tests are required to choose the most appropriate technique. This technique can feasibly separate out quality oil and produce a reduced amounts of sludge that is non-leachable (an important factor in determining how and where you will dispose of the sludge). Centrifugation has also proved to be a viable method, but tends to be more labor intensive and requires dedicated personnel to the operation and maintenance of the centrifuge itself. For larger quantities, this should be the last method considered.

a) Chemical Treatment. This is usually carried out in smaller tanks (1,000 to 5,000 bbls) that provide heat. The demulsifier is transfer injected into the waste stream via a metering pump to ensure adequate mixing and proper dosage. The heat required is generally between 145°F and 165° F (62.8°C and 73.9°C) and may be provided with steam heating coils in the settling tank. The waste stream may be heated before demulsifier addition if convenient. A reclamation facility will typically have two holding tanks. The oil settles in one tank while it is collected in the other. Depending on the size of tank used, 3 to 7 days are required for optimum resolution of the emulsion. After settling, the bottom water is drawn off and returned to the LET for reprocessing. Figure 26 shows the treatment of an oil emulsion in a batch process. For more information on the selection and application of a demulsifier, refer to paragraph 3.10.9.2.

b) Filtration. In filtration (precoat), the emulsion is filtered through a layer of diatomaceous earth, normally deposited on a continuously rotating drum filter. Precoat filtration is not normally recommended because of its high operating costs. For additional details, refer to the API Manual.

3.10.9.2 Demulsifier Selection and Application. Given the complexity and diversity of emulsions, an emulsion breaker is expected to perform many tasks. Ideally, a demulsifier should provide a rapid water break, clean oil that meets reuse specifications, a sharp interface and clear, oil-free water.

Based on the above functions, no single-component chemical can do these jobs effectively. The different surface phenomena that occur in three different phases can only be addressed by a multi-component demulsifier. Therefore, when formulating a demulsifier, one has to consider incorporating a range of solubilities, surface activities, and wetting properties.

An effective demulsifier may consist of two, three, or four components, preselected and blended in a specific order and in carefully controlled proportions.

The selection of demulsifiers requires practical experience. There follows, then, a trial and error narrowing of the choice according to activity and tolerance toward existing system variables. The identification of the best demulsifier and the optimum concentration range is best realized by the jar/bottle test. This is a standard technique (API Code 2500) accepted in the oil industry that has, for many decades, aided the operator in demulsifier selection. A list of suggested vendors and further information on the demulsification of oily wastes can be found in NCEL TM 71-85-35, Treatment, Handling, and Disposal Methods for Chemical Demulsification Sludges.

3.10.10 Pumps, Valves, and Piping

3.10.10.1 Pumps. Primary emphasis should be placed on arranging treatment units for gravity flow operation. Where gravity flow is not feasible or there is a need to control feed rates into treatment units, pumping should be used. Pumps specified for transfer of oily waste should not shear emulsions or mechanically emulsify free oil.

a) Use progressive cavity pump or recessed impeller vortex pump. Progressive cavity pumps require that influent be fine screened to remove any solids large enough to jam the cavity between the stator and rotor components. Pump selection should be based on low speed operation of 700 to 1,100 rpm. Provide a pressure relief system to protect the pumps and discharge piping from being overpressurized if the pump discharge line becomes blocked.

b) A conventional centrifugal pump with high efficiency, fully enclosed impeller and operating speed < 1,750 rpm is recommended to pump treated effluent to a discharge point.

c) Facility designs should provide 100 percent redundancy in pump installations to preclude total plant shutdown on loss of a single pump.

3.10.10.2 Valves. Plug valves and ball valves are recommended. Their self-cleaning tendency when operated reduces the possibility of flow port blockage by debris in the oily waste. They operate simply and quickly with 90-degree action full closed to full open and seal tightly when closed.

3.10.10.3 Piping. Aboveground wastewater and sludge piping should be designed using ductile iron or carbon steel pipe. Chemical feed piping and underground wastewater and sludge piping should be specified as PVC pipe. Due to the corrosiveness of both the oily waste, with a high seawater content, and the "salt air" atmosphere at many naval bases, corrosion resistant coating systems should be specified for both the interior and exterior surfaces of ductile iron and carbon steel pipe. In areas where seasonal temperatures fluctuate widely, adequate provisions for expansion and contraction must be provided to avoid pipe breakage.

For ductile iron and carbon steel piping 4 inches (100 mm) in diameter and larger, cement lining or coal-tar epoxy coating of interior surfaces, and coal-tar epoxy exterior coating should be specified. For carbon steel piping smaller than 4 inches in diameter, polyethylene or Saran lining of interior surfaces and coal-tar epoxy exterior coating should be specified. Piping should be sized for a velocity of 6 to 8 fps (1.8 to 2.4 m/s).

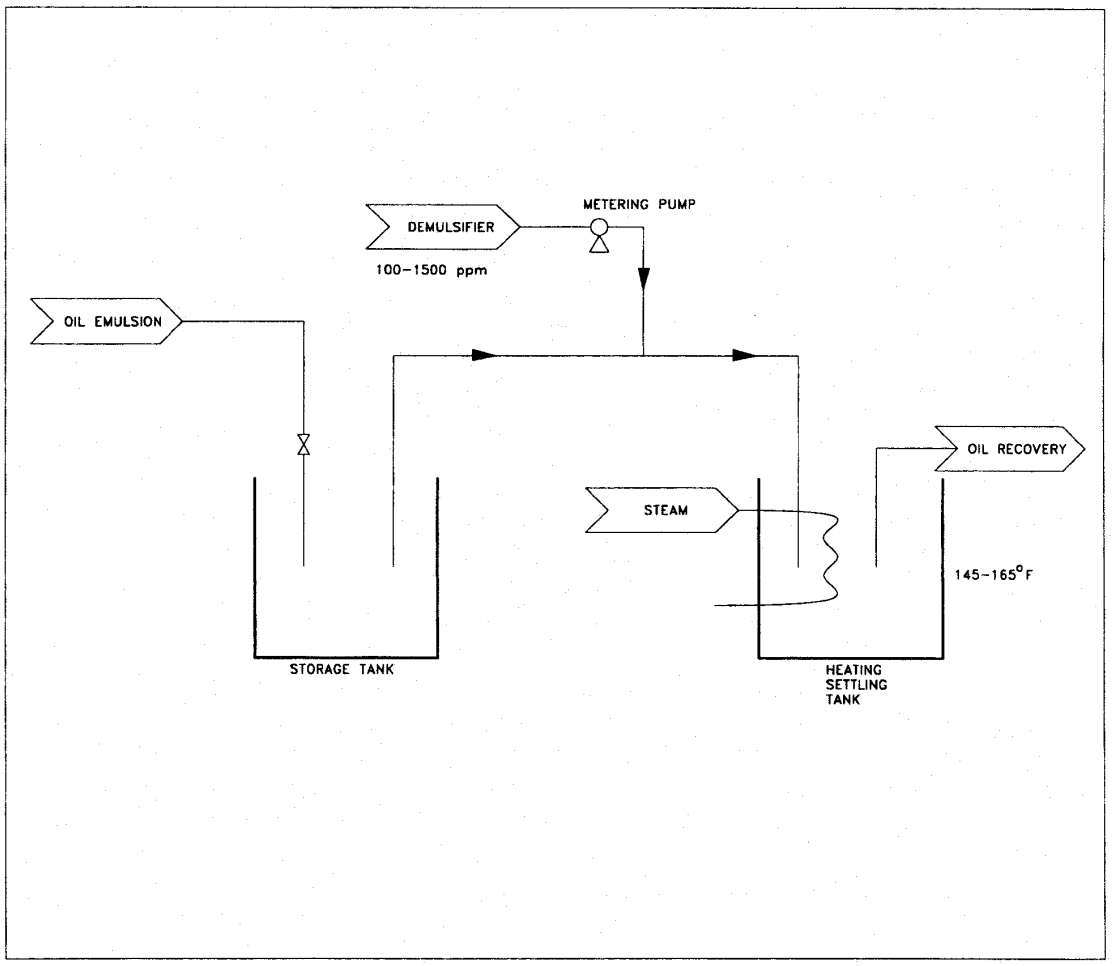

Figure 26
Oil Emulsion Treatment Schematic

3.10.11 Instrumentation. Since the systems are intended to be run on a batch basis, manual control of treatment unit operations is recommended. Excessive automation should be avoided. Any automation provided must have full manual backup. Automatic backwash controls on filtration units and automatic start-stop control of polymer feed systems on sensing flow to a DAF/IAF unit are recommended. pH monitoring and automatic control for chemicals addition are also recommended. On direct discharge systems consider provision for automatic recycles of effluent to a LET if oil is detected at higher than permissible concentrations. Instrumentation should be provided to monitor influent and effluent flow and key effluent quality parameters. Monitoring instrumentation for facilities discharging to navigable waters should be provided in duplicate for 100 percent redundancy. Suggested parameter monitoring guidelines are presented in Table 16.

Table 16
Guidelines for Oily Waste Treatment Monitoring

Parameter	Effluent to POTW	Effluent to Navigable Waters
Influent flow	Continuously monitor using magnetic type meter with chart recorder.	Continuously monitor using magnetic type meter with chart recorder.
Effluent oil content	Analysis of grab samples taken at intervals required by permit.	Continuously monitor using ultraviolet transmission/fluorescence detection type meter with chart recorder. Verify with laboratory analysis of daily grab or composite samples.
Effluent pH	Periodic checks taken at intervals required by permit.	Continuously monitor using submerged probe/remote analyzer type meter with chart recorder.
Effluent flow	Continuously monitor using magnetic, turbine, or overflow weir/float type meter with chart recorder.	Continuously monitor using magnetic, turbine, or overflow weir/float type meter with chart recorder.

Section 4: METERING, INSTRUMENTATION AND CONTROL, AND CHEMICAL FEEDING

4.1 Scope. This chapter contains criteria on metering, instrumentation, controls, and chemical feeding devices used in wastewater disposal systems.

4.2 Related Criteria. Certain criteria related to the subject matter of this Section appear elsewhere in this handbook. Refer to Sections 2 and 3 for instrumentation, control, and chemical feeding for selected wastewater treatment unit processes and operations.

4.3 Use of Criteria. These criteria indicate simple recommended practices applicable to plants with up to 5 Mgd average flow.

4.3.1 Special Cases. Specific design problems may require departures from these practices; therefore, use these criteria with discretion. For example, use of computers and microprocessors for data logging, indication, and process control is considered an emerging technology. This technology is presently primarily applicable to large wastewater treatment plants with adequately trained staff to maintain the hardware (greater than 10 Mgd size). However, improvements in electronics, hardware, software, and sensing devices (primarily sensing elements) will make this technology more desirable for smaller plants. Detailed information is not included for such emerging technology because of its state of rapid change and because additional development and application experience need to occur before application to the smaller naval facilities is justified.

4.3.2 Letters in Tables. To further clarify terms in the tables, the letters (E), (O), and (S) are used to mean:

(E) = Essential — Items described are required wherever particular applications occur.

(O) = Optional	Items described may be required (contingent on specific plant needs).
(S) = Special Cases	Items are sometimes used in large installations or where process variable control is critical.

4.4 Policies. Devices and systems should be as simple as possible. In any installation or facility, equipment procurement should be limited to the smallest practicable number of manufacturers.

4.4.1 Primary Measurement. Provide elements to measure any function essential to proper operating control and evaluation of plant performance.

4.4.2 Instrumentation. Provide remote readouts only where operating convenience and cost savings outweigh added maintenance needs or where hazardous wastes are being treated. Record functions that significantly affect public health, the environment, or economy of operation. Consider data logging devices where costs can be offset by reduced operating manpower needs.

4.4.3 Controls. Consider automatic controls where significant improvement in performance will result or where cost can be offset by reduced operating manpower needs or where treating hazardous wastes; otherwise, keep controls as simple as possible. Wherever feasible, use fixed or manual controls (for example, weirs, launders, siphons, or throttling valves) in preference to mechanical devices. Use direct acting controls (for example, float valves) in preference to electrically or pneumatically actuated devices. Always consider the effects of possible control malfunctions.

4.4.4 Standardization. Standardize equipment wherever possible. Use identical or similar components to the maximum extent. Instrumentation, control, and feeding equipment should be homogeneous (that is, all self-powered, all pneumatic, and so forth).

4.4.5 Equipment Accuracy. Equipment accuracy tolerances should be as low as possible and consistent with the functions desired.

4.4.6 Equipment Ranges. Before selecting equipment such as meters or feeders, compute the required maximum and minimum capacities, and keep ranges as narrow as possible for any piece of equipment.

4.4.7 New Products. New products and applications are constantly being developed. Approval or advice on their uses may be requested from NAVFACENGCOM.

4.5. Information Required. Obtain the following information to assist in equipment selection:

a) Type of treatment.

b) Chemical, physical, and bacteriological qualities of raw wastewater, treated wastewater, and permissible discharge limits.

c) Variations of flow rate for raw wastewater.

d) Ranges of other related variables.

e) Size of treatment plant.

f) Effluent disposal conditions.

4.6 Wastewater Treatment Systems

4.6.1 Primary Measuring Devices

4.6.1.1 Location and Purpose. Primary measuring devices are required at critical locations in wastewater treatment systems to sense and measure flow, pressure, elevation, temperature, weight, and physical and chemical characteristics of process streams. For type of device, see Table 17. For examples of location of measuring devices and types of measurements for industrial waste treatment systems, see Table 18.

4.6.1.2 Use Limitations. Different types of measuring devices are available for each application. The listed capacity of a device includes most sizes and types of the device that are available. The range is the useful turndown ratio of a particular device.

4.6.1.3 Discrete Versus Analog Devices. Alarm functions and many control functions require only the presence or absence of a process variable input for their operation. For example, a sump pump may start if the liquid level is above a certain point or a tank heater may start if the temperature is below a selected point. Control these functions by discrete devices such as flow switches, temperature switches, level switches, and pressure switches. If the actual status of the process variable is required, rather than on/off for indication or control, an analog primary device should be used. Some alarm switches are not included in the tables; for example, clarifier torque switches, speed switches, and other equipment protection switches that are normally supplied with the equipment.

4.6.1.4 Special Considerations. Primary measuring devices for wastewater systems must meet more rigorous operational requirements than those for water supply systems. Select devices constructed of materials impervious to the corrosive effects of the wastewater. Consider plugging of impulse or sampling lines and buildup of solids and grease on analytical probes when specifying these devices.

4.6.1.5 Ship Sewage. In the design of pier sewage collection systems to receive sewage from ships, facilities to meter the total flow through the collection system should be included. The designer should consult the activity's Public Works Department for metering needs. The location of meters necessary to provide the needed information will be determined by the layout of the collection system, but in no case should this exceed one meter at the shore end of each pier. There is no necessity to meter the flow from individual ships.

4.6.2 Instrumentation. Instrumentation covers all secondary instruments (such as gages, indicators, recorders, or totalizers) needed for efficient operation of wastewater treatment systems. Information sensed by a primary device is

translated by instruments into an operator usable form called "readout." Most analog primary devices require secondary instruments, although a few (such as displacement meters) contain built-in counters.

4.6.2.1 Use Limitations. Instruments may be obtained in any combination of totalizing, indicating, or recording of information developed by primary devices. Other more sophisticated forms of instruments (such as summation and multiplication of variables) are possible, but are not normally needed.

4.6.2.2 Transmission. Select means of transmitting information from primary measuring devices to secondary instruments from the following:

a) Mechanical. Transmission distance is limited to a few feet. Consider the effects of corrosion, wear, or icing on mechanical linkages.

b) Pneumatic. Transmission distance can be up to 1,000 feet (304.8 m). Reaction time of pneumatic loops is relatively long if transmission distance is long.

c) Electrical. There is no limitation on distance. Analog signals may require amplification for transmission distances greater than 1,000 feet (304.8 m).

4.6.2.3 Remote Indication. Remote indicators should provide the operator with the status of any function necessary for remote operation of the plant. Panel lights should indicate the on/off status of pumps or other discrete devices, alarm functions, and operator-actuated functions (for example, initiate backwash, fill day tank).

Table 17
Types of Measuring Devices Applicable to Wastewater Treatment Systems

Primary Measurement and Type of Device	Use Examples	General	Capacity	Range
Open Channel Flow:		Accuracy is dependent on piping configuration. Consult vendor data on specific device.		
Flume (Parshall or Palmer-Bowlis)	Plant influent, bypass lines.	Suspended matter does not hinder operation, More costly than weir.	10 gpm (0.6 L/s) and up.	75:1
Weir	Plant influent, plant effluent.	Requires free fall for discharge and greater head loss than flume. Influent weirs may plug.	0.5 gpm (0.03 L/s) and up.	100:1 and up
Pressure Pipeline Flow:				
Differential producers	Filled lines. Fluids under positive head at all times. Not generally for water supply service.			
Venturi tube or flow tube	Most fluid lines where solids build up and scale will not be a problem.	Long laying length required. Costly in large pipe sizes.	5 gpm (0.03 L/s) and up for liquid; 20 ft^3/min (9.4 L/s) and up for gas.	10:1
Orifice plate	Air and gas lines, water except filter effluent.	Clean fluids only.	5 gpm (0.03 L/s) and up for liquid; 20 ft^3/min (9.4 L/s) and up for gas.	5:1
Flow nozzle	Water except filter effluent.	Clean fluids only.	Determined by pipe sizes.	3:1
Displacement meters	Plant water and distribution system service connections.	Different types available. Maximum flow volume somewhat limited. May be in conjunction with chemical feed pump. Clean fluids only.	0.1 to 9,000 gpm (0.006 L/s to 568 L/s) for liquid; 0 to 100 ft^3/min for gas.	10:1
Target meters	Plant effluent, sludge, dirty fluids.	Suspended matter does not hinder operation.	0.07 gpm (0.004 L/s) and up.	10:1
Velocity meters, propeller meter	Water, clean liquids.	Insertion turbine or full bore types available.	0.001 to 40,000 gpm(6.3×10^{-5} to 2524 L/s) for liquids, to 10,000,000 ft^3/min (630,900 L/s) for gas.	10:1 to 50:1

Table 17 (Continued)
Types of Measuring Devices Applicable to Wastewater Treatment Systems

Primary Measurement and Type of Device	Use Examples	General	Capacity	Range
Magnetic meter, sonic or ultrasonic meter	Plant influent, sludge, clean to dirty liquids, plant effluent.	No obstruction in flow stream. Well suited for suspended matter and solids. Sonic meters are subject to interference by air bubbles. Suitable for confined piping systems.	0.001 to 500,000 gpm (6.4 x 10^{-5} to 31,545 L/s).	10:1
Vortex shedding meter	Heat exchanger water lines.		3 to 5,000 gpm (0.2 to 315 L/s).	15:1
Variable area rotameter	Gas and gas solution feeders, chemical dilution systems, influent lines to ion exchange units, water and clean liquids.	Available in very small to very large flow rates at lowest cost for flow indicator.	0.01 mL/min to 4,000 gpm (252 L/min) to 1,300 ft^3/min(614 L/s) for gas.	5:1 to 12:1
Open flow nozzle	Plant influent or effluent, sludge.	Requires free fall from end of pipeline.	5 to 11,000 gpm (0.3 to 694 L/s).	5:1 to 10:1
Level:				
Staff gauge	Wet wells, floating cover digesters, water supply intake.	Indication only.	Unlimited.	100:1
Float	Wet wells, sumps.	Indication near tank, has moving parts.	Unlimited.	100:1
Capacitance probes, RF probes	Wet wells, elevated tanks, tanks, most level applications.	Many types immune to conductive build-up and coating on probe.	Unlimited.	100:1
Sonic or ultrasonic meters	Wet wells, supply intake, batch tanks.	Continuous type does not contact the liquid, may not be suitable for foaming liquids. Gap type for on/off applications.	Unlimited.	50:1
Differential pressure	Batch tanks, chemical tanks.	Specific gravity should be fairly constant. Build-up may be a problem.	Unlimited.	20:1
Bubble tube	Water supply wells.	Requires air supply for automatic. Manual (hand pump type) available for indication only.	Depth limited by air pressure if automatic.	10:1

Table 17 (Continued)
Types of Measuring Devices Applicable to Wastewater Treatment Systems

Primary Measurement and Type of Device	Use Examples	General	Capacity	Range
Pressure:				
Pressure gauge	Pump discharge, transmission mains, elevated tanks, digester gas, aeration air.	Seals or diaphragm may be required to prevent corrosion of plugging impulse connections.	Vacuum to 1,500 psig (10,342 kPA)	10:1
Loss of head gauge	Gravity filters		Unlimited.	3:1
Temperature:				
Thermometer or resistance thermal device	Plant influent, clearwell, atmosphere, digester, digester heating system.			
Analytical Instruments:	Plant influent or effluent, pH precipitator, neutralization, oxidation or reduction processes.		0 to 14 units.	
Oxidation on Reduction Potential (ORP)	Precipitator, oxidation, or reduction processes.	May also be used for free residual chlorine.	-400 mV to +400 mV[1]	
Dissolved oxygen	Mixed liquor, aerobic digester, aeration basin, plant effluent.		0 to 20 mg/L	
Turbidity	Filter influent/effluent. Settling basin effluent.		0 to 1,000 NTU	
Residual chlorine, residual ozone	Treatment unit effluent		0 to 2 mg/L[1]	
Specific ion electrodes	Treatment unit effluent		0 to 2 mg/L[1]	
Ultraviolet photometer	Oil treatment unit influent or effluent.		0 to 50 mg/L	
Sand expansion:				
Float	Gravity filter		Unlimited.	20:1
Weight:				
Scales	Chem. feed and storage equip., grit chamber, sludge cake conveyor.	Weighing devices may be integral to gravimetric feeders.	1 to unlimited.	12:1

Table 17 (Continued)
Types of Measuring Devices Applicable to Wastewater Treatment Systems

Primary Measurement and Type of Device	Use Examples	General	Capacity	Range
Gas Concentration:				
Concentration indicator or alarm	Chlorine rooms, digester operating room, wet wells, lift stations.		0 to 100%	
Time:				
Elapsed time meter (ETM)	Motors requiring periodic service, motors driving principal pumps.		0 to 10,000 h	100,000:1
Revolutions:				
Counter	Positive displacement sludge pumps.	May be used for primary metering of sludge flow.	0 to 100 million.	100 million:1
Electric Power Use:				
Watt-hour meter	Plant power.	Public utility may have governing requirements.	Unlimited.	10,000:1

[1]Depends on actual effluent requirements.

Table 18
Metering, Instrumentation, and Control Requirements for
Industrial Wastewater Treatment Systems

Location and Use	Type of Measurement	Type of Instrument Readout	Range of Measurement and/or Readout	Controls Item Regulated	Controls Type
Pumping:					
Lift station discharge	Flow	Indicator(O)	Minimum to maximum pumping capacity		
		Totalizer (E) Recorder (O)			
	Pressure	Indicator (E)	0 to 1.5 times shutoff pressure		
Suction	Pressure	Indicator (O)	Full vacuum to 1.5 times static suction head		
Transfer pumps suction	Pressure	Indicator (O)	Full vacuum to 1.5 times static suction head		
Transfer pump discharge	Pressure	Indicator (E)	0 to 1.5 times shutoff pressure		
Major pumps	Temperature	Indicator (O)	32° to 200°F (0° to 93°F)		
	Running time	Totalizer (O)	At least 2 times maintenance period		
Surge Tank:	Level	Indicator (E)	Depth of tank	Lift pumps	Automatic (E)
Batch Treatment Tank:	Level	Indicator (E)	Depth of tank	Transfer pump	Manual (O)
Chrome or cyanide waste	pH	Indicator (E)	0 to 14 units	Chemical addition	Automatic (E)
		Recorder (O)			Automatic (O)
	ORP	Indicator (E)	-200 to +200 mV	Chemical addition	Manual (E) Proportional-automatic (O)
Metal waste	pH	Indicator (E)	0 to 14 units	Chemical addition	Manual (E) Proportional-automatic (O)
Neutralization Tank: (batch type)	Level	Indicator (E)	Depth of tank		
	pH	Indicator (E)	0 to 14 units	Chemical addition	Automatic (O)
Clarified Water Storage:	Level	Indicator (E)	Depth of stack		
Filters:					
Influent line to each filter	Flow	Indicator (E)	1 to 4	Filtration rate	Manual (E)
Individual filters	Pressure differential	Indicator (E)	1 to 3	Backwash frequency	Manual (E)
Backwash pump	Flow	Indicator (E)	1 to 4	Backwash rate	Manual (E)

Table 18 (Continued)
Metering, Instrumentation, and Control Requirements for
Industrial Wastewater Treatment Systems

Location and Use	Type of Measurement	Type of Instrument Readout	Range of Measurement and/or Readout	Controls	
				Item Regulated	Type
Spent backwash storage tank	Level	Indicator (E)	Depth of tank		
Sludge Storage Tank:	Level	Indicator (E)	Depth of tank		
Gas feeder:					
Chlorine or sulfur dioxide	Flow	Indicator (E)	1 to 10	Application rate	Manual (E) Proportional-automatic (O)
On-line chlorine cylinder or on-line sulfur dioxide cylinder	Flow	Indicator (E)	3 times full cylinder weight	Chlorine supply	Manual (E)
Chemical bulk storage	Level Temperature	Indicator (E) Indicator (O)	Depth of tank Depends on chemical	Chemical supply Tank heater (if required)	Manual (E) Automatic (E)
Chemical day tanks	Level	Indicator (O)	Depth of tank	Day tank supply	Manual (E)
Oil emulsion breaking tank	Temperature	Indicator (E)	1 to 10	Tank content temperature	Automatic (E)

4.6.3 Controls. Controller devices are needed to regulate the functions of equipment throughout the process. Controls may be classified by the degree of automation.

4.6.3.1 Manual. Use this type of control where the operator will start, stop, or adjust rates of operations based on instrument observations, laboratory tests, or indicated conditions.

4.6.3.2 Automatic. Use this type to automatically start, stop, or regulate rates of operations in response to changes in a measured variable or other input. All equipment must also have manual control to override automatic control regardless of the degree of automation provided.

4.6.3.3 Design Considerations. Many controls combine manual and automatic operations. The operator may initiate an automatic-timed cycle backwash system, or adjust set points of a proportional controller based on instrument observation. Controls that seldom require adjustment (rate of flow to filters, for example) should be manual. Controls requiring frequent adjustment (starting sump pumps, proportional chemical feeding) should be automatic. Whether the automation is on/off-timed cycle, or proportional, must be based on analysis of plant requirements.

4.7 Chemical Handling and Feeding

4.7.1 Introduction. See Table 19 for function of chemicals used for cyanide, oil, and metal removal. Sections 2 and 3 recommend specific chemicals for wastewater applications encountered in Navy facilities. See Table 20 for the usual chemical strengths and other data on chemicals.

4.7.2 Chemical Handling and Feeding

4.7.2.1 Handling. See Table 20 for handling precautions. Provide the following:

a) Roofed unloading platforms.

b) Mechanical handling aids for unloading and transporting chemicals to the storage area, feed hoppers, and solution tanks.

c) Dust control equipment for dry, dusty chemicals.

d) Washdown and cleanup. Facilities for dry and liquid chemical spills.

Table 19
Function of Chemicals for Industrial and Oily Wastewater Treatment

Chemical	Cyanide Removal		Metal Removal					Oil Removal	
	pH	O	A	pH	R	PR	C	pH	C
1. Activated Carbon			X						
2. Aluminum Sulfate							X		X
3. Calcium Carbonate (limestone)				X					
4. Calcium Hydroxide (hydrated lime)	X			X		X		X	
5. Calcium Oxide (quick lime)	X			X		X		X	
6. Calcium Hydrochlorate (HTH, perchlorane)		X							
7. Chlorine		X							
8. Chlorine Dioxide		X							
9. Ferric Chloride							X		
10. Ferrous Sulfate							X		X
11. Ferrous Sulfide						X			
12. Hydrochloric Acid	X			X				X	
13. Hydrogen Peroxide		X							
14. Ozone		X							
15. Polymers (polyelectrolytes)							X		X
16. Sodium Carbonate				X		X			
17. Sodium Chlorite		X							
18. Sodium Hypochlorite		X							
19. Sodium Hydroxide	X			X		X		X	
20. Sodium Meta Bisulfate					X				
21. Sulfur Dioxide					X				
22. Sulfuric Acid	X			X				X	

Key: A = Adsorption pH = pH Adjustment
C = Coagulation PR = Precipitant
O = Oxidizing Agent R = Reducing Agent

Table 20
Data on Chemicals for Wastewater Treatment

Chemical	Available Form	Shipping Container	Bulk Weight lb/ft^3 (kg/m^3)	Commercial Strength	Water Solubility lb/gal (kg/L)	Feeding Form	Feeder Type	Accessory Equipment	Suitable Handling Materials	Comments
Activated Carbon C	Powder	Bag, bulk	Varies		Insoluble	Dry or slurry	Volumetric metering pump	Slurry tank, dust control services	Dry-iron, steel	Combustible dust
	Granular	Bag, bulk	20 to 35 (320 to 560)			Static or fluidized bed			Wet-scrubber, plastic, stainless steel	
Aluminum Sulfate (Alum), $Al_2(SO_4)_3$ $0.14H_2O$	Slab, lump, powder	Bag(100 to 200 lb[45 to 90 kg]), drum	60 to 75 (960 to 1,200)	17% Al_2O_3	5.2 @ 32 °F (0.6 @ 0 °C) 5.5 @ 0 °F (0.65 @ 10 °C) 5.9 @ 68 °F (0.7 @ 20 °C)	Dry or solution	Volumetric metering pump	Dissolver of solution tank	Dry iron, steel, concrete	
	Liquid	Bulk	10.71 lb/gal (1.3 kg/L)	5.8 to 8.5% Al_2O_3	Complete	Solution	Metering pump	Solution tank	Wet-lead, rubber, plastic	
Ammonia NH_3	Liquefied gas	Cylinder (100, 150 lb [45, 70 kg]), bulk		99 to 100%	3.9 @ 32 °F (0.5 @ O °C)	Gas			Dry-steel, iron	
		Carboy, drum, bulk		15 to 30%	3.1 @ 60 °F (0.4 @ 15 °C)	Solution	Metering pump	Solution tank	Wet-stainless steel	
Ammonium Sulfate $(NH_4)_2$ So_4	Crystals	Bag(100 lb [45 kg])	54 (865)		5.9 @ 32 °F (0.7 @ 0 °C) 6.1 @ 50 °F (0.73 @ 10°C)	Solution	Metering pump	Solution tank	Plastic	

Table 20 (Continued)
Data on Chemicals for Wastewater Treatment

Chemical	Available Form	Shipping Container	Bulk Weight lb/ft^3 (kg/m^3)	Commercial Strength	Water Solubility lb/gal (kg/L)	Feeding Form	Feeder Type	Accessory Equipment	Suitable Handling Materials	Comments
Calcium Carbonate $CaCO_3$	Powder, crushed (various sizes)	Bag, barrel, bulk	Powder: 48 to 71 (769 to 1,137); crushed: 70 to 110 (1,120 to 1,760)		Nearly insoluble	Dry slurry used in fixed beds	Volumetric metering pump	Slurry tank	Iron, steel	
Calcium Hydroxide $Ca(OH)_2$	Powder, granules	Bag (50 lb [22 kg]), bulk	25 to 50 (400 to 800)	Normally 13% $Ca(OH)_2$	Nearly insoluble	Dry or slurry	Volumetric metering pump	Slurry tank	Iron, steel, plastic, rubber hose	
Calcium Oxide CaO	Lump, pebble, ground	Bag (80 lb [36 kg]), barrel, bulk	40 to 70 (640 to 1120)	75 to 99% normally 90% CaO	Nearly insoluble	Dry or slurry (must be slaked to $Ca(OH)_2$) bed	Dry-volumetric Wet-slurry (centri-fugal pump)	Slurry tank, slaker	Iron, steel, plastic, rubber hose	Provide means for cleaning slurry transfer pipes
Calcium Hypochlorite $Ca(OCl)_2$ $0.4H_2O$	Granules, tablets	Can (5 lb [2 kg]), drums (100, 300, 800 lb[45,136, 362 kg])	50 to 55 (800 to 880)	70% available chlorine	1.8% @ 32 °F (1.8% @ 0 °C)	Solution or dry	Solution metering pump, Dry tablet contact feeder	Solution tank	Glass, plastic, rubber	Soft water required for solution
Chlorine Cl_2	Liquefied gas	Cylinder (100, 150, 200 lb [45, 68, 90 kg] bulk	Liquid: 91.7 (1,470) Gas: 0.19 @60 °F (3 @16 °C) and atm. pressure	99.8%	0.12 @ 32 °F (0.014 @ 0 °C) 0.047 @ 87 °F (0.006 @ 31 °C)					

Table 20 (Continued)
Data on Chemicals for Wastewater Treatment

Chemical	Available Form	Shipping Container	Bulk Weight lb/ft^3 (kg/m^3)	Commercial Strength	Water Solubility lb/gal (kg/L)	Feeding Form	Feeder Type	Accessory Equipment	Suitable Handling Materials	Comments
Chlorine Dioxide ClO_2	Gas	Prepared on site using chlorine and sodium chlorite, solution pump, and contractor column			0.07 @ 60 °F (0.008 @ 16 °C) 0.4 @ 100 °F (0.005 @ 38 °C)	Water solution of gas	Chlorinator plus sodium chlorite solution pump	Scales, switch over devices, leak detectors, reactor tower	Sched. 80 steel for gas under pressure. Plastic or rubber-lined for gas under vacuum or water solution.	
Ferric Chloride $FeCl_3$	Powder Liquid	Drum (135, 350 lb [61, 159 kg]) Bulk	175 (2,800) 87 to 94 (1390 to 1500)	98% 39 to 45%	4.6 @ 32 °F (0.55 @ 0 °C) 5.8 @ 55°F (0.7 @ 13 °C)	Liquid Liquid	Metering pump Metering pump	Solution tank	Glass, rubber, plastic	Dilution limited due to iron hydrolysis
Ferric Sulfate $Fe(SO_4)_3 .xH_2O$	Powder	Bag (50, 100, 175 lb [23, 45, 79 kg])	70 to 72 (1120 to 1150) soluble iron	21%	Very soluble	Liquid pump	Metering tank	Solution plastic	Glass, rubber	Dilution limited due to iron hydrolysis
Ferrous Sulfate $FeSO_4$ $0.7H_2O$	Crystals, powder, lumps Liquid	Bag (50, 100 lb[23, 45 kg]); Drum (55 gal [208 L]; bulk Bulk	62 to 66 (990 to 1060) Varies, consult producer	55 to 58% Varies, consult producer		Liquid Liquid	Metering pump Metering pump	Solution tank	Glass, rubber, plastic	Dilution limited due to iron hydrolysis
Ferrous Sulfide	Liquid solution	Prepared on site by mixing ferrous sulfate, a soluble sulfide and lime			Nearly insoluble	Slurry	Metering pump			

Table 20 (Continued)
Data on Chemicals for Wastewater Treatment

Chemical	Available Form	Shipping Container	Bulk Weight lb/ft^3 (kg/m^3)	Commercial Strength	Water Solubility lb/gal (kg/L)	Feeding Form	Feeder Type	Accessory Equipment	Suitable Handling Materials	Comments
Hydrochloric acid HCL	Liquid	Barrel, drum, bulk	27.9%, 0.53 lb/gal (0.06 kg/L) 31.45%, 9.65 lb/gal (1.16 kg/L)	27.9% 31.45% 35.2%	Complete	Liquid	Metering pump	Dilution	Hastel-lory A, selected plastic and rubber types	
Hydrogen Peroxide H_2O_2	Liquid	Drum (30, 55 gal [113, 208 L]), bulk	35%, 9.4 lb/gal (1.13 kg/L) 50%, 10 lb/gal (1.2 kg/L) 70%, 10.8 lb/gal (1.3 kg/L)	35%, 50%, 100%	Complete	Liquid	Metering pump		Type 304 stainless steel, poly-ethylene	Strong oxidizing agent
Ozone O_3	Gas	Generated on site from air or oxygen				Gas solutio n		Consult equipment supplier	Unplasti-cized PVC, stainless steel	Toxic, irritant
Polymers	Liquid, powder	Drum, bulk	See note 1			Solutio n		Storage and dilution tanks	Consult supplier	See note 2
Phosphoric Acid H_3PO_4	Liquid	Carboy, barrel, keg, bulk	75%, 13.1 lb/gal (1.6 kg/L)	75%	Complete	Liquid	Metering pump		Type 316 or alloy 20 stainless steel, selected plastics	
Potassium Permanganate $KMnO_4$	Crystals	Drum (110, 220, 550 lb [50, 100, 250 kg])	100 (1,600)	95 to 99%	0.525 @ 68 °F (0.06 @ 20 °C)	Liquid pump	Metering tank	Dissolvin g	Iron, steel, PVC	
Sodium Aluminate $NaAlO_2$	Powder	Bag (100, 150, 250, 440 lb[45, 68, 113, 200 kg])	50 to 60 (800 to 960)	72 to 90%	2.45 @ 32 °F (0.3 @ 0 °C) 2.8 @ 50 °F (0.34 @ 10 °C) 3.1 @ 68 °F (0.37 @ 20 °C)	Dry	Volumetric	Dissolvin g tank	Wet or dry-iron, steel	

Table 20 (Continued)
Data on Chemicals for Wastewater Treatment

Chemical	Available Form	Shipping Container	Bulk Weight lb/ft^3 (kg/m^3)	Commercial Strength	Water Solubility lb/gal (kg/L)	Feeding Form	Feeder Types	Accessory Equipment	Suitable Handling Materials	Comments
	Liquid	Drum	Varies	Varies	3.3 @ 86 °F (0.4 @ 30 °C)	Liquid	Metering pump			
Sodium Bicarbonate $NaHCO_3$	Granular, powder Bulk	Bag	44 to 55 (705 to 880)	99.8%	0.57 @ 32 °F (0.07 @ 0 °C) 0.68 @ 50 °F (0.08 @ 10 °C) 0.80 @ 68 °F (0.10 @ 20 °C)	Dry Liquid	Volumetric Metering Pump	Dissolving tank	Iron, steel, stainless steel	Tends to decompose and absorb moisture
Sodium Carbonate Na^2CO^3	Powder	Bag (100 lb [45 kg]), bulk	34 to 62 (545 to 993)	99.2%	0.58 @ 32 °F (0.07 @ 0 °C) 1.04 @ 50 °F (0.12 @ 10°C) 1.79 @ 68 °F (0.21 @ 20 °C) 3.33 @ 86 °F (0.40 @ 30 °C)	Dry Liquid	Volumetric feeder Metering pump	Dissolving	Iron, steel	Can cake
Sodium Chloride NaCl	Rock, evaporated	Bag, barrel, bulk	50 to 70 (800 to 1,120)	Varies	2.97 @ 32 °F (0.356 @ 0 °C) 2.97 @ 50 °F (0.356 @ 10°C) 3.00 @ 68 °F (0.359 @ 20 °C) 3.02 @ 86 °F 0.362 @ 30 °C)	Solution	Pump	Dissolving tank	Plastic, iron, steel	
Sodium Chlorite $NaClO_2$	Flake Liquid	Drum (100 lb [45kg]) Drum, bulk	Varies	Varies		Solution	Metering pump	Dissolving tank	Plastic (avoid cellu-lose)	Use to produce chlorine dioxide
Sodium Hypochlorite (NaOCl)	Liquid	Carboy (5, 13, 59 gal.[19, 49, 223 L]); bulk (1,300, 2,000 gal[4,920, 7,570 L]);truck-load		12 to 15% available chlorine	Complete	Solution	Metering pump	Solution tank	Plastic, glass, rubber	

Table 20 (Continued)
Data on Chemicals for Wastewater Treatment

Chemical	Available Form	Shipping Container	Bulk Weight lb/ft^3 (kg/m^3)	Commercial Strength	Water Solubility lb/gal (kg/L)	Feeding Form	Feeder Type	Accessory Equipment	Suitable Handling Materials	Comments
Sodium Hydroxide NaOH	Solid flake, ground flake, liquid	Drum (735, lb [333 kg]); drum (100 lb [45 kg]); drum (450 lb [204 kg])	Varies	98%	3.5 @ 32 °F (0.4 @ 0 °C) 4.3 @ 50 °F (0.5 @ 10 °C) 9.1 @ 68 °F (1.09 @ 20 °C) 9.2 @ 86 °F (1.10 @ 30 °C)	Solution	Metering pump	Solution tank	Iron, steel	Dissolving solid forms generates much heat
Sodium Meta-bisulfite $Na_2S_2O_5$	Lump, ground	Bag (100 lb [45 kg]); drum (100 and 300 lb [45 and 136 kg])	84 to 95 (1346 to 1522)		2.3 @ 68 °F (0.28 @ 20 °C)	Solution	Metering	Solution	Plastic, Type 316 stainless steel	
Sulfur Dioxide SO_2	Liquefied gas	Cylinder (150, 2,000 lb [68907 kg])	Liquid-89.6 (1435) Gas @ 32 °F and 1 atm.-0.183(0 °C and 101 kPA-2.9)	99%	1.0 @ 60 °F (0.014 @ 16 °C)	Water solution of gas	Vacuum-sulfur-meter	Scales, switch over devices	Dry-316 stainless steel Wet and low pressure plastic, rubber	
Sulfuric Acid H_2SO_4	Liquid	Carboy, drum (825 lb [374 kg]). Bulk	106 (1700) 114 (1830)	77.7% 93.2%	Complete	Liquid	Metering pump			Provide for spill cleanup and neutral-ization

Notes:
[1]The various cationic, anionic, and nonionic polymers vary in composition, density and other characteristics. Consult a supplier for data.
[2]Polyelectrolytes have relatively short periods of chemical potency once mixed and diluted. Most manufacturers will advise mixing no more than a 1 to 3 day supply in the solution feed tank. Therefore, a protected area must be provided for storage of sealed bugs or containers of dry polyelectrolyte or sealed containers of concentrated liquid polyelectrolyte.

4.7.2.2 Storage. See Table 21 for space criteria and Table 22 for type criteria. Refer to American Concrete Institute (ACI), Concrete Sanitary Engineering Structures, for criteria on protection of concrete against chemicals.

a) Store materials in original containers in dry rooms on boards or pallets.

b) Locate storage for dry chemicals at the level of feed hopper inlets if possible.

c) Do not exceed safe floor load limits.

d) For liquefied gas cylinders, provide cool, dry, well ventilated, aboveground storage rooms of noncombustible construction, remote from heat sources, walkways, elevators, stairways, and ventilating system intakes.

e) Determine compatibility of all chemicals stored. Store incompatible chemicals separately.

f) Refer to paragraph 4.7.2.5 for personnel safety precautions.

4.7.2.3 On-Site Generation and Feeding Equipment

a) Ozone. Ozone can be generated from air or from high-purity oxygen.

(1) Generation from air requires the air to be filtered and dried to a dew point less than -58°F (-50°C) by desiccation and refrigeration.

(2) When using oxygen for the production of ozone, refrigeration and desiccation are not required except when recycling is used. Use oxygen for the generation of ozone where savings are indicated. Power consumption is halved when oxygen is used to generate ozone, but oxygen must be recycled or used for aeration to achieve overall economy.

Table 21
Chemical Storage Space Criteria

Class of Chemicals	Noninterruptible	Interruptible
Examples of class	All chemicals used for disinfection. Chemicals used for coagulation in treatment plants where raw water is polluted. Softening chemicals.	Chemicals used for corrosion control. Taste and odor fluoridation.
Minimum stock to be maintained, in days.[1]	30	10
Additional allowance based on shipping time, in days.[1,2]	2 times shipping time.	1-1/2 times shipping time.

[1]Based on maximum use expected for total consecutive days plus additional allowance.
[2]Additional allowance based on shipping time, in days.

(3) For ozone feeding equipment, use porous diffusers, injectors, or emulsion turbines to ensure optimum contact.

b) Hypochlorite. Compare the cost of hypochlorite generated from brine with the cost of purchased hypochlorite solution delivered to site.

Generation is generally cheaper and may compare favorably with the cost of gaseous chlorine.

Table 22
Chemical Storage Type Criteria

Type of Storage	Dry	Wet
Handling requirements	Allow for access corridors between stacks of packaged chemicals.	Provide agitation for slurries such as carbon or lime (not less than 1 hp mixing for 100 ft^3)
	Palletize and use forklift truck only in large installations.	Check manufacturers of feed and mixing equipment for pumps, pipe sizing, and materials selection.
Safety and corrosion requirements	Provide separated storage spaces for combustibles and for toxic chemicals, such as carbon or chlorine gas.	Double-check corrosion resistance of bulk storage linings, pipe, mixing, and pumping materials.
	Provide ample space between stores of materials that may interact, such as ferrous sulfate and lime.	Isolate hazardous or toxic solutions such as fluosilicic acid. Prefer below ground or outdoor storage.

c) Chlorine Dioxide. Chlorine dioxide can be generated using a solution of sodium chlorite ($NaClO_2$) and a solution feed-type gas chlorinator.

(1) Solutions are fed through packed media reactor for generation of chlorine dioxide in solution.

(2) Optimum operating conditions are pH ≤ 4; chlorine solution ≥ 500 milligram per liter (mg/L); 1:1 weight ratio of pure chlorite to chlorine; and reaction time ≥ 1.0 minute.

(3) Reactor effluent will contain approximately 70 percent hypochlorite and 30 percent chlorine dioxide. Approximate yield is 0.4 lb ClO_2/lb Cl_2. Near 100 percent conversion to chlorine dioxide can be achieved by available recycle equipment. (Yield = 1.0 lb ClO_2/lb Cl_2)

(4) Practical dosage range of 6:1. System operating as flow proportional should provide acid injection directly upstream from the chlorinator injector to maintain optimum pH.

(5) Chlorine dioxide solutions are unstable in open vessels. Solution lines and diffusers must be designed so there is minimum possibility of chlorine dioxide coming out of solution.

4.7.2.4 Chemical Feeders. See Table 23 for applications of various types of feeders.

a) Dry Feeder Accessories. Dry feeders may require specific auxiliary equipment or accessories when the chemical to be fed has unusual characteristics. Accessories and the conditions under which they are used are as follows:

Accessory	Characteristics of Material Requiring Use of Accessory
Agitator	Arches in hoppers
Rotolock mechanism	Tends to flood
Dissolving chamber	To be fed in solution
Dust collector	Dusty
Vapor collector	Noxious or irritating fumes

b) Feeder Construction. Mechanisms of feeders must be constructed out of materials resistant to substances to be handled. See Table 20 for guidance on materials selection.

c) Feeder Accuracy. The accuracy of feeders should be in these ranges:

Table 23
Types of Chemical Feeders for Wastewater Treatment Systems

Type of Feeder	Use	General	Limitations Capacity $ft^3/hr (m^3/hr)$	Range
Dry Feeder:				
Volumetric:				
Oscillating plate	Any material, granules or powder		0.01 to 35 (2.83×10^{-4} to 0.99)	40 to 1
Oscillating throat (universal)	Any material, any particle size		0.002 to 100 (5.66×10^{-5} to 2.83)	40 to 1
Rotating disc	Moist materials including NaF, granules or powder	Use disc unloader for arching.	0.01 to 1.0 (2.83×10^{-4} to 0.028)	20 to 1
Rotating cylinder (star)	Any material, granules or powder		8 to 2,000 (0.23 to 56.6)	or 10 to 1
Screw	Dry, free flowing material, powder or granules		0.05 to 18 (1.41×10^{-3} to 0.51)	20 to 1
Ribbon	Dry, free flowing material, powder, granules, or lumps		0.0006 to 0.16 (1.7×10^{-5} to 4.53×10^{-3})	10 to 1
Belt	Dry, free flowing material up to 1-1/2-inch (3.8 cm) in size. Powder or granules.		0.01 to 3,000 (2.83×10^{-4} to 85.0)	10 to 1 or 100 to 1
Gravimetric:				
Continuous-belt and scale	Dry, free flowing, granular material, or floodable material	Use hopper agitator to maintain constant density.	0.02 (5.7×10^{-4})	100 to 1
Loss in weight	Most materials, powder, granules or lumps		0.02 to 80 (5.66×10^{-4} to 2.27)	100 to 1

Table 23 (Continued)
Types of Chemical Feeders for Wastewater Treatment Systems

Type of Feeder	Use	General	Limitations Capacity $ft^3/hr (m^3/hr)$	Range
Solution Feeder:				
Nonpositive Displacement:				
Decanter (lowering pipe)	Most solutions or light slurries		0.01 to 10 (2.83×10^{-4} to 0.28)	100 to 1
Orifice	Most solutions	No slurries	0.16 to 5 (4.5×10^{-3} to 0.14)	10 to 1
Rotometer (calibrated valve)	Clear solutions	No slurries	0.005 to 0.16 (1.42×10^{-2} to 4.53×10^{-3})	or 10 to 1
			0.01 to 20 (2.83×10^{-4} to 0.57)	10 to 1
Loss in weight (tank with control valve)	Most solutions	No slurries	0.002 to 20 (5.66×10^{-5} to 0.57)	10 to 1
Eductor	Most solutions	No slurries	For batch or continuous rate of feed only.	
Positive Displacement:				
Rotating dipper	Most solutions or slurries		0.01 to 30 (2.83×10^{-4} to 0.85)	100 to 1

Table 23 (Continued)
Types of Chemical Feeders for Wastewater Treatment Systems

Type of Feeder	Use	General	Limitations Capacity $ft^3/hr (m^3/hr)$	Range
Proportioning Pump:				
Diaphragm	Most solutions. Special unit for 5% slurries[1]		0.004 to 0.15(1.13 x 10^{-4} to 4.25 x 10^{-3})	100 to 1
Piston	Most solution, light slurries		0.01 to 170(2.83 x 10^{-4} to 4.81)	20 to 1
Gas Feeders:				
Solution feed	Chlorine		8,000 lb/day maximum (3629 kg/day maximum)	20 to 1
	Ammoni a		2,000 lb/day maximum (907 kg/day maximum)	20 to 1
	Sulfur dioxide		7,600 lb/day maximum (3447 kg/day maximum)	20 to 1
Direct feed	Chlorine		300 lb/day maximum (136 kg/day)maximum	10 to 1
	Ammonia		120 lb/day maximum (54 kg/day)maximum	7 to 1

[1]Use special heads and valves for slurries.

(1) Volumetric feeders, accuracy of ±3 percent.

(2) Gravimetric feeders, accuracy of ±1 percent. Gravimetric feeders are more expensive than volumetric feeders.

4.7.2.5 Safety Precautions. Provide the following safety factors as a minimum:

a) First aid kits.

b) Continuous toxic gas monitors with alarms and pressure demand self-contained breathing apparatus (SCBA) for emergency gas situations.

c) A readily accessible potable water supply to wash away chemical spills. Locate emergency shower and eyewash facilities where they are easily accessible to those in need.

d) Special handling clothing and accessories, such as gloves, goggles, aprons, and dust masks.

e) Adequate ventilation as determined by the medical activity industrial hygienist.

f) No electrical convenience outlets in activated carbon storage or feeding rooms. Store activated carbon in a separate room with adequate fire protection.

g) Entry into confined spaces will require adherence to a gas-free engineering program.

4.7.2.6 Chemical Feeder Capacity and Standby Requirements. Base feeder capacity on maximum expected instantaneous flow and dosage. Essential (noninterruptible) chemical feeders such as disinfection units must have a standby unit having capacity equal to the largest unit. The need for standby units on other treatment processes depends on raw water quality and the specific treatment scheme. Where two chemical feed systems could use the same spare chemical feeder, one standby unit to

serve both is adequate. Refer to EPA 430-99-74-001, Design Criteria for Mechanical, Electrical, and Fluid System Component Reliability (MCD-29).

4.7.3 Sampling. Institute sampling programs only as needed to obtain data for the design and operation of wastewater treatment facilities, or to determine compliance with standards and the effect of waste streams (both raw and treated) on receiving waters. Refer to American Society for Testing and Materials (ASTM) D 3370, Sampling Water, for general discussion of sampling water and wastewater.

4.7.3.1 Sampling Techniques

a) Collection Point. Collect all samples in conduits or channels at point where flow is highly turbulent. Collect sample from process tank only if tank contents are well mixed. Consider width, length, and depth when selecting sampling point from process tank.

b) Type of Sample. Use samples composited on basis of time and flow, but take single grab samples when:

(1) Wastewater stream is intermittent or concentration is highly variable.

(2) Obtaining information for which time between collection and analysis of sample must be minimized (for example, sampling for dissolved oxygen, temperature, pH, chlorine demand, and residual chlorine; these cannot be composited).

(3) Ascertaining characteristics at extreme conditions.

(4) Samples for oil and grease may be manually composited. Automatic sampling is not normally accurate.

c) Method of Sampling. Use widemouthed containers to take grab samples. At small plants (up to 1 Mgd [3.8×10^6 L/d]), take composite samples manually by combining a series of regularly collected grab samples, such that the contribution

from a particular grab sample is proportional to the flow at the time it was taken. At large plants and industrial wastes use automatic sampling devices that can be programmed for desired sampling method, that is, grab, continuous, or flow proportional composite.

4.7.3.2 Sample Volume and Preservation. Volume and preservation requirements depend on: (1) the analytical determinations to be carried out on the sample, and (2) the time between sample collection and analysis. See Table 24 for recommendations for sampling and sample preservation. Refer to American Public Health Association (APHA) Examination of Water and Wastewater and EPA PB 84-128677, Manual of Methods for Chemical Analysis of Water and Wastes, for specific recommendations regarding sample containers, volumes, and methods of sample preservation for each analytical measurement.

4.7.4 Analytical Methods. Analytic methods available for quantitative determination of physical, biological, inorganic chemical, and organic chemical characteristics of wastewater samples are summarized in Table 25. Refer to APHA Examination of Water and Wastewater for detailed laboratory procedures.

4.7.4.1 Routine Testing During Plant Operation. A routine sampling and analysis program to maintain plant operability and performance is required. This program is unique to the individual industrial and oily wastewater treatment facilities and a general program cannot be developed by this manual.

The program should be fully developed in the Operations and Maintenance Manual and revised accordingly after plant startup and the 30-day performance certification period. The program should include the following: sample locations and method, sample type (grab or composite), sampling frequency, and analyses required per sample. The Operations Manual should also identify minimum reporting requirements for regulatory compliance and should provide operating log sheets for recording operating data.

Table 24
Recommendations for Sample Collection and Preservation According to Measurement

Measurement	Volume mL	Container[1]	Preservative	Holding Time[2]
Physical Properties:				
Color	50	P,G	Cool, 4°C (39.2°F)	24 h
Conductance	100	P,G	Cool, 4°C (39.2°F)[3]	24 h
Hardness	100	P,G	Cool, 4°C (39.2°F) HNO_3 to pH<2[4]	6 mo
Odor	200	G only	Cool, 4°C (39.2°F)	24 h
pH	25	P,G	Determine on site	6 h
Residue:				
Filterable	100	P,G	Cool, 4°C (39.2°F)	7 d
Nonfilterable	100	P,G	Cool, 4°C (39.2°F)	7 d
Total	100	P,G	Cool, 4°C (39.2°F)	7 d
Volatile	100	P,G	Cool, 4°C (39.2°F)	7 d
Settleable Matter	1000	P,G	None required	24 h
Temperature	1000	P,G	None	No holding
Turbidity	100	P,G	Cool, 4°C (39.2°F)	7 d
Metals:				
Dissolved	200	P,G	Filter on site HNO_3 to pH <2[4]	6 mo
Suspended	200	P,G	Filter on site	6 mo
Total	100	P,G	HNO_3 to pH<2[4]	6 mo
Mercury:				
Dissolved	100	P,G	Filter on site HNO_3 to pH <2[4]	38 d (glass) 13 d (hard plastic)
Total	100	P,G	HNO_3 to pH<2[4]	38 d (glass) 13 d (hard plastic
Inorganics, Nonmetallics:				
Acidity	100	P,G	None required	24 h
Alkalinity	100	P,G	Cool, 4°C (39.2°F)	24 h
Bromide	100	P,G	Cool, 4°C (39.2°F)	24 h
Chloride	50	P,G	None required	7 d
Chlorine	200	P,G	None	No holding
Cyanides	500	P,G	Cool, 4°C (39.2°F) NaOH to pH 12	24 h
Fluoride	300	P,G	None required	7 d
Iodine	100	P,G	Cool, 4°C (39.2°F)	24 h

Table 24 (Continued)
Recommendation for Sample Collection and
Preservation According to Measurement

Measurement	Volume mL	Container[1]	Preservative	Holding Time[2]
Nitrogen:				
Ammonia	400	P,G	Cool, 4°C (39.2°F) H_2SO_4 to pH<2	24 h
Total Kjeldahl	500	P,G	Cool, 4°C (39.2°F) H_2SO_4 to pH<2	24 h[5]
Nitrate plus nitrite	100	P,G	Cool, 4°C (39.2°F) H_2SO_4 to pH<2	24 h[5]
Nitrate	100	P,G	Cool, 4°C (39.2°F)	24 h
Nitrite	50	P,G	Cool, 4°C (39.2°F)	48 h
Dissolved Oxygen:				
Probe	300	G only	None	No holding
Winkler	300	G only	Fix on site	4 to 8 h
Phosphorous:				
Orthophosphate, dissolved	50	P,G	Filter on site	24 h
Hydrolyzable	50	P,G	Cool, 4°C (39.2°F) H_2SO_4 to pH<2	24 h[5]
Total	50	P,G	Cool, 4°C (39.2°F) H_2SO_4 to pH<2	24 h[5]
Total, dissolved	50	P,G	Filter on site Cool, 4°C (39.2°F) H_2SO_4 to pH<2	24 h[5]
Silica	50	P only	Cool, 4°C (39.2°F)	7 d
Sulfate	50	P,G	Cool, 4°C (39.2°F)	7 d
Sulfide	500	P,G	2 ml zinc acetate	24 h
Sulfite	50	P,G	None	No holding
Organics:				
BOD	1000	P,G	Cool, 4°C (39.2°F)	24 h
COD	50	P,G	H_2SO_4 to pH<2	7 d[5]
Oil and Grease	1000	G only	Cool, 4°C (39.2°F) H_2SO_4 or HCL to pH<2	24 h
Organic carbon	25	P,G	Cool, 4°C (39.2°F) H_2SO_4 or HCL to pH<2	24 H
H_2SO_4 or HCL				
Phenolics	500	G only	Cool, 4°C (39.2°F) H_2PO_4 to pH<4 1.0 g $CuSO_4$/1	24 h
MBAS	250	P,G	Cool, 4°C (39.2°F)	24 h
NTA	50	P,G	Cool, 4°C (39.2°F)	24 h

Table 24 (Continued)
Recommendation for Sample Collection and
Preservation According to Measurement

[1]Plastic (P), Glass (G). For metals, polyethylene with a polypropylene cap (no liner) is preferred.

[2]Recommended holding times for properly preserved samples based on currently available data. Extension or reduction of these times may be possible for some sample types and measurements. Where shipping regulations prevent the use of proper preservation techniques or the holding time is exceeded, reported analytical data should indicate the variation in recommended procedures.

[3]If the sample is preserved, it should be warmed to 25°C (77°F) for measurement or temperature correction made and results reported at 25°C (77°F).

[4]Where $HN0_3$ cannot be used because of shipping restrictions, the sample may be initially preserved by icing and immediately shipped to the laboratory. Upon receipt in the laboratory, the sample must be acidified to a pH<2 with $HN0_3$ (normally 3 mL 1:1 $HN0_3$/L is sufficient). At the time of analysis, the sample container should be thoroughly rinsed with 1:1 $HN0_3$ and the washings added to the sample. A volume correction may be required.

[5]Data from National Enforcement Investigations Center, Denver, Colorado, support a 4-week holding time for this parameter in sewerage systems (SIC 4952).

Table 25
Analytical Methods

Characteristics	Method of Analytic Determination
Physical Parameters:	
Color	Photometric
Odor	Physiological
Temperature	Thermometric
Turbidity	Nephelometric
Total suspended solids	Gravimetric
Specific conductance	Conductivity meter
Biological Parameters	
Total coliform bacteria	Fermentation tube or membrane filter
Fecal coliform bacteria	Fermentation tube or membrane filter
Inorganic Chemical Parameters[1]:	
Alkalinity	Potentiometric or colorimetric titration
Ammonia nitrogen	Spectrophotometric, or titratmetric
Arsenic	AA spectroscopy
Boron	Colorimetric
Cadmium	AA spectroscopy
Chloride	Titrametric
Chlorine residual	Colorimetric or potentiometric titration
Hexavalent chromium	AA spectroscopy
Copper	AA spectroscopy
Fluoride	Colorimetric or ion selective probe
Hardness	Titrametric
Iron	Colorimetric or AA spectroscopy
Lead	AA spectroscopy
Manganese	Colorimetric
Mercury	AA spectroscopy
Nitrates	Colorimetric or ion selective probe
Nitrites	Spectrophotometric
pH	Electrometric
Phosphorous	Colorimetric
Selenium	AA spectroscopy
Silver	AA spectroscopy
Sulfate	Gravimetric or nephelometric
Sulfide	Colorimetric
Total dissolved solids	Gravimetric
Zinc	AA spectroscopy
Organic Chemical Parameters:	
Cyanide	Colorimetric
Methylene blue active substances	Spectrophotometric
Oil and grease	Hexane extraction

Table 25 (Continued)
Analytical Methods

Characteristics	Method of Analytic Determination
Pesticides	Solvent extraction plug gas chromatographic analysis
Phenols	Photometric
Biochemical oxygen demand	Chemical oxidation

[1]Atomic absorption spectroscopy and flame emission photometry are recommended for most metals analyses. These are designated "AA spectroscopy."

BIBLIOGRAPHY

Filtering Materials for Sewage Treatment Plants, ASCE Manual of Engineering Practice No. 13, American Society of Civil Engineers, New York, NY 10017.

Environmental Quality Program, OPNAVINST 6240.3, U. S. Naval Publications and Forms Center 5801 Tabor Ave., Philadelphia, PA 19120.

REFERENCES

NOTE: THE FOLLOWING REFERENCED DOCUMENTS FORM A PART OF THIS HANDBOOK TO THE EXTENT SPECIFIED HEREIN. USERS OF THIS HANDBOOK SHOULD REFER TO THE LATEST REVISIONS OF CITED DOCUMENTS UNLESS OTHERWISE DIRECTED.

MILITARY HANDBOOKS, P-PUBLICATIONS, DESIGN MANUALS, AND NAVFAC GUIDE SPECIFICATIONS:

Unless otherwise indicated, copies are available from the Department of Defense Single Stock Point (DODSSP), Standardization Document Order Desk, Building 4D, 700 Robbins Avenue, Philadelphia, PA 19111-5094.

HANDBOOKS

MIL-HDBK-1002	Series on Structural Engineering
MIL-HDBK-1002/1	Structural Engineering General Requirements
MIL-HDBK-1002/2	Structural Engineering Loads
MIL-HDBK-1002/3	Steel Structures
MIL-HDBK-1002/5	Timber Structures
MIL-HDBK-1002/6	Aluminum Structures
MIL-HDBK-1003/3	Heating, Ventilating, Air Conditioning, and Dehumidifying Systems
MIL-HDBK-1004/6	Lighting and Cathodic Protection
MIL-HDBK-1005/7	Water Supply Systems

MIL-HDBK-1005/8	Domestic Wastewater Control
MIL-HDBK-1005/13	Hazardous Waste Storage
MIL-HDBK-1022	Petroleum Fuel Facilities
MIL-HDBK-1025/2	Dockside Utilities for Ship Service
MIL-HDBK-1027	Series on Training Facilities
MIL-HDBK-1027/1	Firefighting School Facilities
MIL-HDBK-1027/3	Range Facilities and Miscellaneous Training Facilities
MIL-HDBK-1027/4	Aviation Training Facilities
MIL-HDBK-1190	Facility Planning and Design Guide

GUIDE SPECIFICATIONS

NFGS-02530	Sanitary Sewerage
NFGS-02630	Storm Drainage
NFGS-11311	Parallel Plate Gravity Oil-Water Separator

DESIGN MANUALS

DM-5.10	Solid Waste Disposal
DM-5.14	Groundwater Pollution Control

P-PUBLICATIONS

NAVFAC P-355	Seismic Design for Buildings
NAVFAC P-916	User’s Guide for the Handling, Treatment, and Disposal of Oily Sludge

NAVY DEPARTMENT INSTRUCTIONS:

Available from the DODSSP, Standardization Document Order Desk, 700 Robbins Avenue, Building 4D, Philadelphia, PA 19111-5094.

CNET 4100.4	Energy Technology Application Program
NAVFACINST 4862.5	Industrial Facilities Acquisition Projects Which Involve Complex Processes or Hazardous/Toxic Materials
OPNAVINST 4110.2	Hazardous Material Control and Management
OPNAVINST 5090.1	Environmental and Natural Resources Program Manual
SECNAVINST 5030.1	Classification of Naval Ships and Craft

OTHER GOVERNMENT DOCUMENTS AND PUBLICATIONS:

Title 33, Code of Federal Regulations, Part 154.530.

Title 40, Code of Federal Regulations, Part 110

Title 40, Code of Federal Regulations, Part 260, Subpart C.

Title 40, Code of Federal Regulations, Part 261.24

Title 40, Code of Federal Regulations, Part 403.6.

Title 40, Code of Federal Regulations, Part 403, Appendix B.

Title 40, Code of Federal Regulations, Part 403, Appendix C.

Title 40, Code of Federal Regulations, Part 413

Title 40, Code of Federal Regulations, Part 433

(Unless otherwise indicated Federal Regulations are available from the Government Printing Office, Superintendent of Documents, Washington, DC 20402-9325).

EPA 430-99-74-001	Design Criteria for Mechanical, Electrical, and Fluid System Component Reliability (MCD-29)
EPA 600/2-82-001 a-e	Treatability Manual, Volumes I-V, Office of Research and Development
EPA 600/4-90-02F	Acute Toxicity-Freshwater and Marine Organisms
EPA 625/3-77-009	Controlling Pollution From the Manufacturing and Coating of Metal Products, Metal Coating Air Pollution Control - I and Solvent Metal Cleaning Air Pollution Control - II
PB 80-2200546	Process Design Manual, Sludge Treatment and Disposal
PB 84-128677	Manual of Methods for Chemical Analysis of Water and Wastes
PB 214551	Process Design Manual, Suspended Solids Removal
PB 259146	EPA Handbook for Monitoring Industrial Wastewater
PB 259147	EPA Process Design Manual, Carbon Adsorption

(Unless otherwise indicated, copies are available from the U.S. Environmental Protection Agency (EPA), Office of Water Program Operations, Municipal Construction Division, Washington, DC 20460.)

NCEL TM M-54-78-06	Disposal of Wastewater Containing Aqueous Film Forming Foam (AFFF)
NCEL TM M-71-85-35	Treatment, Handling, and Disposal Methods for Chemical Demulsification Sludges
AD 282520	Sanitary Waste Disposal for Navy Camps in Polar Regions

(Unless otherwise indicated, copies are available from the Naval Facilities Engineering Service Center (NFESC), 1100 23rd Avenue, Port Hueneme, CA 93043-4370.)

NAVSHIP ENGINEERING CENTER DIRECTIVE	Ship-to-Shore Interface for Sewage Disposal System

(Unless otherwise indicated, copies are available from the Department of the Navy, The Pentagon, Washington, DC 20301.)

TM 5-852	Arctic and Subarctic Construction

(Unless otherwise indicated, copies are available from the Department of Army, Corps of Engineers, 20 Massachusetts Avenue NW, Washington, DC 20314-1000.)

NON-GOVERNMENT PUBLICATIONS:

AMERICAN CONCRETE INSTITUTE (ACI)

Concrete Sanitary Engineering Structures, Journal of the American Concrete Institute, Proceedings, Vol. 68, No. 8, p. 560

(Unless otherwise indicated, copies are available from the American Concrete Institute (ACI), P.O. Box 9094, Farmington Hills, MI 48333.)

AMERICAN NATIONAL STANDARDS INSTITUTE (ANSI)

ANSI A13.1	Scheme for the Identification of Piping Systems

(Unless otherwise indicated, copies are available from the American National Standards Institute (ANSI), 11 W. 42nd Street, 13th Floor, New York, New York 10036.)

AMERICAN PETROLEUM INSTITUTE (API)

Manual on Disposal of Refining Wastes, Volume on Liquid Wastes

(Unless otherwise indicated, copies are available from the American Petroleum Institute (API), 1220 L Street NW, Washington, DC 20005.)

AMERICAN PUBLIC HEALTH ASSOCIATION (APHA)

Examination of Water and Wastewater, 19th Edition

(Unless otherwise indicated, copies are available from the American Public Health Association (APHA), 1015 15th Street, NW, Washington, DC 20005.)

AMERICAN SOCIETY FOR TESTING AND MATERIALS (ASTM)

ASTM D 3370 Sampling Water

(Unless otherwise indicated, copies are available from the American Society for Testing and Materials (ASTM), 100 Barr Harbor Drive, West Conshohocken, PA 19428-2959.)

AMERICAN SOCIETY OF CIVIL ENGINEERS (ASCE)

ASCE Journal of the Environmental Engineering Division

(Unless otherwise indicated, copies are available from the American Society of Civil Engineers (ASCE), 345 E. 47th Street, New York, NY 10017.)

HYDRAULIC INSTITUTE

Engineering Data Book

(Unless otherwise indicated, copies are available from the Hydraulic Institute, 1230 Kuth Building, Cleveland, Ohio 44115.)

STEEL STRUCTURES PAINTING COUNCIL (SSPC)

SP 5	Joint Surface Preparation Standard White Metal Blast Cleaning

(Unless otherwise indicated, copies are available from the Steel Structures Painting Council (SSPC), 40 24th Street, Pittsburgh, PA 15222.)

WATER ENVIRONMENT FEDERATION (WEF)(FORMERLY WATER POLLUTION CONTROL FEDERATION (WPCF))

MOP No. FD-5	Gravity Sanitary Sewer Design and Construction
MOP No. 3	Regulation of Sewer Use
MOP No. 8	Wastewater Treatment Plant Design

(Unless otherwise indicated, copies are available from Manuals the Water Environment Federation (WEF), 601 Wythe Street, Alexandria VA 22314-1994 or by calling (800) 666-0206.)

AUTHORED PUBLICATIONS:

Adams and Eckenfelder (Association of Water and Air Resources), Process Design Techniques for Industrial Waste Treatment, Aware, Inc., 225 French Landing Drive, Nashville, TN 37228.

Eckenfelder, W.W. and Ford, D. L., Industrial Water Pollution Control, 2nd Edition, McGraw-Hill, 1988.

Mootz, Water-Oil Separator for Fuel-Oil Handling Facilities, Chemical Engineering.

Ouano, Developing a Methodology for Design of Equalization Basins, Water and Sewage Works Journal (November 1977).

PRESENTATIONS:

Use of Rapid Bioassay Procedure for Assessment of Industrial Wastewater Treatment Effectiveness, presented at the 38th Purdue Industrial Waste Conference, May 1983.

GLOSSARY

ABS. Acrylonitrile-butadiene-styrene.

ACI. American Concrete Institute.

A-E. Architect-engineering.

AFFF. Aqueous film-forming foam.

API. American Petroleum Institute.

ARO. Advanced reversed osmosis.

ASCE. American Society of Civil Engineers.

BAT. Best available technology.

BOD. Biochemical oxygen demand.

BPT. Best professional judgment.

CFR. Code of Federal Regulations.

CNET. Chief of Naval Education and Training.

COD. Chemical oxygen demand.

DAF. Dissolved air flotation.

DOD. Department of Defense.

DRMO. Defense Reutilization and Marketing Office.

ED. Electrodialysis.

EFA. Engineering Field Activity.

EFD. Engineering Field Division.

EPA. Environmental Protection Agency.

ERU. Electrolytic recovery unit.

FWPCA. Federal Water Pollution Control Act.

GAC. Granular-activated carbon.

IAF. Induced air flotation.

LET. Load equalization tank.

MLSS. Mixed liquor suspended solids.

MOP. Manual of practice.

NADEP. Naval Aviation Depot.

NAVFACENGCOM. Naval Facilities Engineering Command.

NCEL. Naval Civil Engineering Laboratory.

NOTW. Navy owned treatment works.

NPDES. National Pollutant Discharge Elimination System.

NVSS. Nonvolatile suspended solids.

O&M. Operations and maintenance.

OPA. Oil Pollution Act.

OPNAV. Chief of Naval Operations.

ORP. Oxidation-reduction potential.

OWHT. Oily waste holding tank.

OWTP. Oily waste transfer pump.

OWWO. Oily waste and waste oil.

PAC. Powdered-activated carbon.

POTW. Publicly owned treatment works.

PVC. Polyvinyl chloride.

RBP. Rapid bioassay procedure.

RCRA. Resource Conservation and Recovery Act.

SCBA. Self-contained breathing apparatus.

SWOB. Ship waste oily barges.

TCLP. Toxicity characteristic leaching procedure.

TOC. Total organic carbon.

TSCA. Toxic Substances Control Act.

TSS. Total suspended solids.

UL. Underwriters Laboratories Inc.

VC. Vitrified clay.

VSS. Volatile suspended solids.

WOT. Waste oil tank.

CUSTODIAN
NAVY - YD2

PREPARING ACTIVITY:
NAVY - YD2

PROJECT NO.
FACR-1173

STANDARDIZATION DOCUMENT IMPROVEMENT PROPOSAL

INSTRUCTIONS

1. The preparing activity must complete blocks 1, 2, 3, and 8. In block 1, both the document number and revision letter should be given.
2. The submitter of this form must complete blocks 4, 5, 6, and 7.
3. The preparing activity must provide a reply within 30 days from receipt of the form.

NOTE: This form may not be used to request copies of documents, nor to request waivers, or clarification of requirements on current contracts. Comments submitted on this form do not constitute or imply authorization to waive any portion of the referenced document(s) or to amend contractual requirements.

I RECOMMEND A CHANGE:	1. DOCUMENT NUMBER MIL-HDBK-1005/9A	2. DOCUMENT DATE *(YYMMDD)* 971031

3. DOCUMENT TITLE INDUSTRIAL AND OILY WASTEWATER CONTROL

4. NATURE OF CHANGE *(identify paragraph number and include proposed rewrite, if possible. Attach extra sheets as needed.)*

5. REASON FOR RECOMMENDATION

6. SUBMITTER

a. NAME *(Last, First, Middle Initial)*	b. ORGANIZATION	
c. ADDRESS *(Include Zip Code)*	d. TELEPHONE *(Include Area Code)* (1) Commercial (2) DSN *(If applicable)*	7. DATE SUBMITTED: *(YYMMDD)*

8. PREPARING ACTIVITY

a. NAME COMMANDER NAVFACENGCOM CRITERIA OFFICE	b. TELEPHONE *(Include Area Code)* (1) Commercial (2) DSN
c. ADDRESS *(Include Zip Code)* 1510 GILBERT STREET NORFOLK, VA 23511-2699	**IF YOU DO NOT RECEIVE A REPLY WITHIN 45 DAYS, CONTACT:** Defense Quality and Standardization Office 5203 Leesburg Pike, Suite 1403, Falls Church, VA 22041-3466 Telephone (703) 756-2340 DSN 289-2340