UFC 4-510-01
16 October 2003

UNIFIED FACILITIES CRITERIA (UFC)

DESIGN: MEDICAL MILITARY FACILITIES

APPROVED FOR PUBLIC RELEASE; DISTRIBUTION UNLIMITED

UNIFIED FACILITIES CRITERIA (UFC)

DRAFT: MEDICAL MILITARY FACILITIES

Any copyrighted material included in this UFC is identified at its point of use.
Use of the copyrighted material apart from this UFC must have the permission of the copyright holder.

DEFENSE MEDICAL FACILITIES OFFICE (Preparing Activity)

U.S. ARMY CORPS OF ENGINEERS

NAVAL FACILITIES ENGINEERING COMMAND

AIR FORCE CIVIL ENGINEER SUPPORT AGENCY

Record of Changes (changes are indicated by **1**\ ... /**1**/)

Change No.	Date	Location

This is a republication of Military Handbook 1191 (2002) as a Unified Facilities Criteria document.

FOREWORD

The Unified Facilities Criteria (UFC) system is prescribed by MIL-STD 3007 and provides planning, design, construction, sustainment, restoration, and modernization criteria, and applies to the Military Departments, the Defense Agencies, and the DoD Field Activities in accordance with USD(AT&L) Memorandum dated 29 May 2002. UFC will be used for all DoD projects and work for other customers where appropriate.

UFC are living documents and will be periodically reviewed, updated, and made available to users as part of the Services' responsibility for providing technical criteria for military construction. Headquarters, U.S. Army Corps of Engineers (HQUSACE), Naval Facilities Engineering Command (NAVFAC), and Air Force Civil Engineer Support Agency (AFCESA) are responsible for administration of the UFC system. Defense agencies should contact the preparing service for document interpretation and improvements. Technical content of UFC is the responsibility of the cognizant DoD working group. Recommended changes with supporting rationale should be sent to the respective service proponent office by the following electronic form: Criteria Change Request (CCR). The form is also accessible from the Internet sites listed below.

UFC are effective upon issuance and are distributed only in electronic media from the following sources:

- Unified Facilities Criteria (UFC) Index http://65.204.17.188//report/doc_ufc.html.
- USACE TECHINFO Internet site http://www.hnd.usace.army.mil/techinfo/index.htm.
- NAVFAC Engineering Innovation and Criteria Office Internet site http://criteria.navfac.navy.mil.
- Construction Criteria Base (CCB) system maintained by the National Institute of Building Sciences at Internet site http://www.nibs.org/ccb.

Hard copies of UFC printed from electronic media should be checked against the current electronic version prior to use to ensure that they are current.

AUTHORIZED BY:

DONALD L. BASHAM, P.E.
Chief, Engineering and Construction Division
U.S. Army Corps of Engineers

DR. JAMES W WRIGHT, P.E.
Chief Engineer
Naval Facilities Engineering Command

KATHLEEN I. FERGUSON, P.E.
The Deputy Civil Engineer
DCS/Installations & Logistics
Department of the Air Force

Dr. GUY W. MOY, P.E.
Director, Installations Requirements and Management
Office of the Deputy Under Secretary of Defense (Installations and Environment)

MILITARY HANDBOOK

DEPARTMENT OF DEFENSE
MEDICAL MILTARY FACILITIES
DESIGN AND CONSTRUCTION CRTIERIA

ABSTRACT

This handbook provides mandatory design and construction criteria for facilities in the DoD Medical Military Construction Program. These criteria are also applicable to military medical facilities funded by other programs, under limitations discussed in Section 1. Service-specific criteria may augment this handbook, but requirements that exceed this guidance must be fully justified to ensure understanding by the reviewing officials.

For MILCON projects, the procedures outlined in this handbook apply from the time the Design Authorization (DA) is issued by the Defense Medical Facilities Office (DMFO) and throughout the design, construction, Beneficial Occupancy, and the Post-Occupancy Evaluation (POE) period.

While these criteria were not developed primarily for use in review of military construction program and budget submissions, it is recognized they may be used for that purpose. Projects should not, however, be approved, disapproved, or justified solely on the basis of these criteria.

FORWARD

This handbook is issued under the authority of DoD Directive 6015.17, "Procedures for the Planning, Programming, Budgeting, and Execution for Construction of Military Health Facilities", dated April 15, 1986, which gave the Defense Medical Facilities Office (TMA-DMFO) the authority to develop and maintain the facilities planning, design, and construction criteria in support of the missions of the Military Health Services System.

This handbook applies to the Office of the Secretary of Defense (OSD), the Military Departments, the Organization of the joint Chiefs of Staff (OJCS), the Unified and Specified Commands, the Defense Agencies, and activities administratively supported by OSD (hereafter referred to collectively as "DoD Components"). This handbook covers criteria unique to Category Code 171, 310, and 500 facilities only and shal be used in conjunction with the MIL-HDBK-1190, "Facility Planning and Design Guide", for general building requirements.

The Defense Medical Facilities Office (TMA-DMFO), 5205 Leesburg Pike, Suite 100, Skyline 1, Falls Church, VA 22041-3208, is the Office of Primary Responsibility (OPR) for approval of this handbook. The U.S. Army Corps of Engineers' Medical Facilities Center of Expertise is the Executive Agent responsible for maintenance of the Handbook. Recommendations for improvement to this handbook are encouraged and should be reported on the DoD Form 1426 provided inside the back cover to the U.S. Army Corps of Engineers, CEHNC-MX, Humphreys Engineer Center, 7701 Telegraph Road, Room 2A-16, Alexandria, VA 22315-3813, with information copy to TMA-DMFO. The using Military Departments and the Design and Construction Agents may submit proposed changes to this handbook through the Healthcare Facilities Steering Committee and TMA-DMFO as provided at Section 01 of this handbook.

This handbook shall not be used as a reference document for procurement of facilities construction. It is to be used in the purchase of facilities engineering studies and design (plans, specifications, and cost estimates).

TABLE OF CONTENTS

Section 01: General Design Guidance.
Section 02: Design Procedure, Submittals, and Documentation.
Section 03: Master Planning and Site.
Section 04: Architecture.
Section 05: Structural.
Section 06: Seismic.
Section 07: Energy and Water Conscious Design.
Section 08: Heating, Ventilating, and Air Conditioning.
Section 09: Plumbing and Medical Gases.
Section 10: Electrical.
Section 11: Communications.
Section 12: Accessibility.
Section 13: Fire Protection.
Section 14: Security.
Section 15: Force Protection.
Section 16: Medical and Dental Equipment.
Section 17: Conveyance Systems.
Section 18: Waste Management.
Section 19: Integrated Building Systems.
Section 20: Construction.
Section 21: Signage.
Section 22: Food Service.
Section 23: Acoustics.

Appendix A: Individual Room Design Requirements and Conditions.
Appendix B: Design Submittals and Documentation Guideline.
Appendix C: Universal X-Ray Room.
Appendix D: UFAS Interpretations and Waivers.

Glossary: Glossary of Terms, Abbreviations, and Acronyms.

SECTION 1: GENERAL GUIDANCE

1.1 General. This section provides general guidance on Department of Defense (DoD) policies and procedures for design and construction of Defense Medical Facilities, including medical and dental treatment facilities (MTF's), medical training facilities, medical research facilities, and veterinary treatment facilities in the Defense Medical Program. When feasible, this document is also to be utilized as criteria in the addition, alteration, or service upgrade to existing U.S. Military medical facilities funded by military departmental programs. Subject to the restrictions provided herein; applicability shall be limited only to those portions of such facilities, and/or the corresponding support services, specifically referenced by the project authorization document. It is the DoD objective to provide facilities that are responsive to the functional requirements of the using Military Department.

1.2 Applicability. This document sets forth DoD policy, procedures, and technical criteria for the design and construction of facilities in the Department of Defense Medical (DoDM) Military Construction (MILCON) program, and other medical design and construction projects over $750,000 regardless of the funding source (JFIP, CDIP, BRAC, etc.). When feasible, the technical criteria in this document shall be the basis of design for Operations and Maintenance (O&M) and/or Repair and Maintenance (R&M) work, though the specific submittal and approval requirements may vary for these types of projects. In overseas locations, where Status of Forces Agreements (SOFA) or local host country codes and standards conflict with the criteria in this handbook, conflicts will be resolved on a case-by-case basis and whenever feasible settled at the Design Agent level with concurrence of TMA/DMFO.

1.3 Policy. As stated in the DoD Directive 6015.17 (reference 1L), it is DoD policy to design efficient, economical, and safe facilities, which sustain an effective combat force, that support the DoD medical wartime mission, and that meet the provisions of Title 10, United States Code (reference 1a). This document prescribes the DOD technical criteria and policy guidance for the design and construction of safe, functional, and durable facilities, which will have reasonable and appropriate maintenance and operations, costs throughout their designed life. Detailed design criteria and procedures, which may be developed and issued by the DoD Components (Military Departments), shall be consistent with the policy statements and criteria contained herein and shall not deviate these criteria without TMA/DMFO approval, as provided at 1.4.3. Facility designs shall:

1.3.1 Meet the operating requirements of the using activity and provide reasonable flexibility to accommodate future changes.

1.3.2 Provide functional facilities at the most economical and practicable life-cycle-cost.

1.3.3 Be aesthetically compatible with the local environs and meet necessary environmental requirements including applicable federal, state, and local environmental standards and criteria. Necessary coordination shall be maintained with the state and local community in accordance with

the requirements of E.O. 12372 (reference 1c) as implemented by DoD Directive 4165.61 (reference 1d).

1.4 Responsibilities. The Office of the Assistant Secretary of Defense (Health Affairs), OASD(HA), Tricare Management Activity (TMA), Defense Medical Facilities Office (DMFO) is responsible for medical facility policy and planning, and is the office having primary responsibility for preparing and maintaining healthcare facility criteria. The Medical Military Construction Operations (MMCO) is responsible for programming medical military construction projects and managing financial resources for planning, design and construction. TMA/DMFO is also responsible to review those portions of DoD Medical MILCON concept level designs described in Section 02 of this document, and to certify these designs in accordance with DoD Directives 5136.12 and 6015.17 (references 1e and 1l). The Design and Construction Agents may maintain supplementary technical criteria and will execute design and construction following established regulations and procedures unless otherwise directed by the TMA/DMFO. Design Agents will produce designs for a complete and useable facility within the approved programmed scope and programmed amount. The Military Departments as the users are responsible for all medical functional review and input during design. The Functional User's and the Service’s Design Agent’s responsibilities often overlap but do not supersede the respective medical and technical role of the other; the design of each facility must be a collaborative partnership. Specific responsibilities are addressed in various sections of this handbook.

1.4.1 Responsible Office. The Office of the Assistant Secretary of Defense (Health Affairs), OASD(HA), TMA/DMFO is responsible for the general administrative management of this entire document, and has responsibility for the contents and development of criteria in collaboration with the Healthcare Facilities Steering Committee (See below).

1.4.2 Healthcare Facilities Steering Committee (HFSC). The HFSC acts as the body responsible for the technical contents of this document. This Committee is composed of members of TMA, the using Military Departments, and the Service’s design agents actively involved in the planning, programming, design, and construction of facilities. All proposed MIL-HDBK-1191 criteria updates and changes may be formally submitted to the Committee for evaluation. DD Form 1426 is provided for this purpose at the end of this MIL-HDBK-1191.

1.4.3 Waivers. TMA/DMFO has final authority to waive MIL-HDBK-1191 policy, procedures, or criteria including any deviations. Requests for project specific waivers to any portion of this document must be submitted in writing by the Design Agent, with full particulars and justification, and must be fully coordinated with the using Military Department.

1.4.4 Design/Construction Agents. As designated by the Secretary of Defense (SECDEF) for certain geographical locations, Design/Construction Agents are responsible for the execution of projects from receipt of a Design Authorization from TMA/DMFO through the completion of construction.

Design/Construction Agents are:

a) The U. S. Army Corps of Engineers (USACE). The Headquarters, USACE, Defense Agencies and Support For Others Branch (CEMP-MD) is the primary USACE point of contact with OASD(HA) and is responsible for all program management issues. The USACE Medical Facilities Center of Expertise, Huntsville Engineering and Support Center (CEHNC-MX) is USACE's technical expert for medical design, with responsibility for concept design oversight, medical technical review of final designs, and medical design guidance, criteria, and standards.

b) The Naval Facilities Engineering Command (NAVFAC). The NAVFAC Medical Facilities Design Office (MFDO) is the Navy's point of contact with OASD(HA)and technical expert for medical design and NAVFAC's final decision making authority regarding technical guidance, criteria, and standards on all medical projects from initiation of project to beneficial occupancy of the building.

c) The Air Force Civil Engineers (AF/ILECM). Air Force Civil Engineering Directorate of Engineering is the primary point of contact with OASD(HA) in the United Kingdom.

1.5 Referenced Documents. The DoD Directives, Instructions, and selected technical data, publications and standards (latest or most current editions) are referenced in the text by basic designation only and form a part of these criteria to the extent required by these references. Where references are made to MIL-HDBK-1190 (reference 1f), those referenced sections shall become an integral portion of this guidance.

1.6 Restrictions. This handbook is not to be used as a reference document for procurement of facilities construction. It is to be used in the acquisition of Military Medical Facilities engineering studies and designs (final plans, specifications, and cost estimates).

1.7 Predesign Considerations. Using Service, in coordination with TMA/DMFO and as funded by the using service, will prepare a Project Planning Package prior to the start of design. This package shall include the following documents and information, provided to TMA-DMFO by the Using Service in accordance with the DoD Medical Military Construction Timeline, Figure 2-1:

1.7.1 DD Form 1391. Describes the scope, cost, type of construction and the rationale for the project.

1.7.2 Project Narrative. Summarizes the sizing decision process, siting, construction scenario, significant planning information and results.

1.7.3 Economic Analysis (EA). The Using Service will provide an economic analysis as supporting justification of DOD medical projects with a cost over $2 million, in accordance with guidance developed by the Healthcare Facilities Steering Committee. The Economic Analysis compares mission-based alternatives and identifies the most cost-effective capital investment. Specific requirements for the EA are contained in DoDI 6015.17 (Reference 1l).

1.7.4 Program for Design (PFD). Include the estimated number of parking spaces as part of the Space Program.

1.7.5 Equipment Planning. The Using Service is responsible for preparing an equipment list for installed medical and dental equipment, and the associated budgeting, to support this requirement (MILCON) based on the Space and Equipment Planning System (SEPS). Equipment in Logistical category Codes E and F may be altered by the using Military Department if funding source requirements are not exceeded. Any increase in the funding for category Codes E and F equipment over the programmed amount of the project requires TMA/DMFO approval.

1.7.6 Project Book (PB). The PB summarizes existing site conditions and utilities, including the following minimum information.

a) Completed site survey (Example format is provided in Figure 1-1),area maps, location maps, site location, site description (to include grades, gates, etc), style of architecture, construction season limitations, seismic, wind and snow considerations, SOFA, host country agreements, soil and foundation conditions, utility conditions (water, sewer, power, steam, electrical capacities and location), and site restrictions (airfield, AICUZ potential helipad approach/departure zone obstructions, floodland, rights-of-way, etc.), site security restrictions, the National Capital Planning Commission (NCPC).

b) Utility availability, including water, sewage, storm drainage, electrical power, existing fuel sources, central heat or chilled water systems, including the tap-in locations. Also include the available capacities, power service characteristics and locations, electrical distribution, water and wastewater considerations.

c) Environmental impact requirements, archaeological and historical considerations, explosive ordinance locations, contaminated soil (fuel, asbestos, etc.), coastal zone considerations, wetlands and watershed considerations, threatened and endangered species considerations, water quality, air quality, asbestos contamination, protection of natural resources information, and any other Environmental Protection Agency (EPA) or Occupational Safety and Health Administration (OSHA) considerations necessary which might impact the MILCON project.

d) Force Protection/Security requirements including contingency considerations and statement by installation commander of designee identifying appropriate threat security level wherever minimal requirements are exceeded.

e) Contingency mode concept of operation where applicable.

f) Fire protection considerations, such as accessibility and water supply.

g) Communications Information or data systems, telephone and signal interface requirements for fire, police, etc., telephone switch capacities and line availability for MILCON project, Energy and Utility

Monitoring and Control System (EMCS, UMCS) interface, master antenna, cable TV and closed circuit availability, computer interface, telecommunications and all other similar or useful information. (THE NEED TO ASSESS AND ADDRESS THE INFRASTUCTURE FOR THE VARIOUS DIGITAL RADIOGRAPHY TECHNOLOGIES SHOULD BE ADDRESSED ALSO)

1.7.7 Addition-Alteration Facility Information. For these projects, information is provided on the type and characteristics of existing construction, size of facility, condition of utilities and services, existence of significant known code or safety issues, and descriptions of previous alterations or additions of significance.

1.8 Design Considerations.

1.8.1 Economic Feasibility. Project designs must be functional, aesthetically pleasing, and cost effective to acquire, maintain, and operate. The goal of every design is to provide the most functional, life-cycle cost-effective, maintainable, design possible within the available funds.

1.8.1.1 Cost estimates during design for building systems and casework shall be based on Figure 1-2. Logistical responsibility is explained in Section 16 and in the glossary.

1.8.2 Use of Local Materials and Skills. Project designs should consider economies that can be affected by the use of suitable local materials, construction methods, and skills which are consistent with the intent of these criteria.

1.8.3 Use of New Materials and Techniques. Project designs should consider new materials and techniques of construction, which have produced satisfactory results in actual use. Concurrence of the using Military Department, the Design Agent, and TMA/DMFO are required before proceeding with design using radically different materials or techniques.

1.8.4 Use of Stock Products. Use commercially available stock or standard materials, fixtures, and equipment whenever practicable.

1.8.5 Functional Use of Materials. Select both structural and finish materials that are consistent with simple functional design and appropriate for the climatic conditions of the geographical area where the project is located.

1.8.6 Integrated Building Systems (IBS). The basic IBS design concepts apply to all medical and medical research facilities regardless of size. The more sophisticated IBS Systems Module design concepts, including utility pods and interstitial walk-on decks dedicated to utility distribution, are to be considered only for larger or more complex facilities. Use of the IBS Systems Module design concepts must be approved by TMA-DMFO.

1.8.7 Future Expansion. Incorporate considerations for future expansion into all designs. Consider both external and internal expansion of vital functions such as ancillary and utility services. Building siting, vehicular access, structural systems, departmental adjacencies,

functional layouts within departments, and utility type and source all play major roles in developing an economically expandable design. Provision for future vertical expansion is authorized when approved by TMA/DMFO.

1.8.8 Construction Quality. Facilities shall be designed and constructed to provide a well-built and enduring product at the lowest practicable life cycle cost. Specific criteria for individual spaces are set forth in Appendix A. Materials used in design and construction of overseas projects shall be in character with materials, techniques, and methodologies used for similar structures in that country unless, in the opinion of TMA/DMFO, the Design Agent and the using Military Department, U.S. standards should prevail.

1.8.9 Environmental Quality. Congressional and administrative guidance for general policies regarding environmental quality is provided in MIL-HDBK-1190 (reference 1f). Additionally, comply with all Service specific requirements for environmental quality.

1.8.10 Fallout Protection. Provide Fallout protection according to the policy guidance given in DoD Directive 3020.35 (reference 1g) and MIL-HDBK-1190, (reference 1f), and as directed by the TMA/DMFO, using Military Department and Design Agents.

1.8.11 Arctic/Subarctic construction. Facility design must meet or exceed Army Technical Manual TM-5-852 (reference 1m). The requirements addressed in these technical manuals include but are not limited to adverse temperature, wind, snow, thermal stress due to frost heaving and permafrost conditions, labor and material costs associated with remote locations, and sub-zero temperature fuel additives and synthetic lubricants for construction equipment.

1.8.12 Antiterrorism and Force Protection (AT/FP). All projects must comply with the Department of Defense Antiterrorism and Force Protection (AT/FP) Construction Standards 16 December 1999 or latest revision as established and released by the Department.

1.8.12.1 Disposition of Excess Facilities. Provide descriptive plan for the removal of excess facilities.

1.9 Improvement/Alteration of Existing Facilities. The criteria contained herein are not to be used as the sole justification for any addition, alterations or improvements to an existing facility. Rather these criteria define requirements that shall be met when improvement or alterations of existing facilities, or sub-portions or systems thereof, are specifically authorized by reference in the project document.

1.9.1 Levels Of Facility Alteration. Categorize and estimate all costs associated with projects containing altered areas including the cost of temporary structures, if required, according to the following definitions

1.9.1.1 Level 1 - Light alteration includes minor partition layout changes, new finish treatment, minor casework and equipment changes, minor modifications to Heating, Ventilation and Air Conditioning (HVAC) distribution systems, and minor electrical branch circuit changes. The

estimated cost of this alteration should not exceed 30 percent of replacement cost for the same type of facility.

1.9.1.2 Level 2 - Medium alteration includes Level 1 changes, minor-to-major partition layout changes with associated modifications to the HVAC distribution systems and electrical power and light requirements, minor structural modifications, new plumbing fixtures, allowances for roof repair, and changes in mechanical system insulation when asbestos is present. The estimated cost of this alteration should not exceed 50 percent of replacement cost for the same type of facility.

1.9.1.3 Level 3 - Heavy alteration includes Level 1 and 2 changes, gutting of the building to structural frame without demolishing floors, exterior walls and roof assembly, modifications to structural frame, main electrical distribution system, air handling units and auxiliary equipment, plumbing system, and energy plant. The estimated cost of this alteration should not exceed 75 percent of replacement cost for the same type of facility.

1.9.1.4 Proposed alteration projects with a cost exceeding the 75 percent of replacement cost must be considered for a total replacement of the facility unless other restrictions make it an infeasible option.

1.9.2 Interim Facilities. The cost of interim facilities (temporary construction), if required, shall be included in the estimated cost for each of the above levels of alteration.

1.9.3 Site Investigation. Designers shall conduct thorough investigations of existing facilities to be upgraded or modified, in accordance with the conditions of their design contracts, to become knowledgeable of facility conditions. This includes the need to inspect concealed spaces (above-ceiling areas, chases, and equipment rooms, for example), to permit evaluation and accurate depiction of as-built conditions. Design agents are responsible to assure that the scope of work for each design contract describes this designer responsibility. Generally, designers should be required to directly inspect all equipment rooms and all above-ceiling areas in enough locations as to reasonably establish the existing conditions in all major areas and departments, and on each floor, of a given project facility. In facilities with “hard” ceilings, this may require the creation of inspection openings, and the need to establish in the Scope of Work the responsibility for making and repairing these openings. The design team must recognize the economic advantages of a detailed designer site investigation: if the designers do not verify conditions, the construction contractor must do so, normally at a cost premium reflected in higher bidding costs (unknown conditions) and change orders (changed conditions).

1.9.4 Modifications to Existing Systems. Modifications to existing equipment and systems, including temporary connections, changes to system performance, or measures necessary to sustain service, shall be shown and described in detail in project design documents. Designers shall evaluate the impact on existing systems of “tap-ins” which increase overall system demand. The locations of new connections shall clearly be shown and/or described. The designer shall determine, and document for the design agent’s information, any project work which will necessitate a

reduction or interruption of any service to an existing, occupied area

1.9.5 Protection of Patients From Construction Contaminants. For additions or alterations to existing hospitals, design projects shall include instructions (including specifications, drawings, drawing notes, and details, as applicable) defining measures required of the construction-contractors to minimize contamination of the existing medical facility. Measures to reduce the potential of contamination and nosocomial infections include but are not limited to negative isolation of construction areas, construction of effective dust barriers, protection of air distribution systems serving occupied areas, maintenance of adequate handwashing stations, and disinfection of any reused ductwork. Designers should consult with the facility's infection control representative and facility management during the design process to assure thorough coordination of design features that may affect patient welfare.

1.9.6 Construction Phasing Plan. Designers shall develop a phasing plan, consisting of detailed written instructions as well as any graphic/drawing aids necessary to clearly communicate the content, location, and sequence of work activities. The plan shall identify the scope, duration, and timing sequence of each individually identifiable work item, with all required lead-in, preparatory, and commissioning activities.

1.9.7 Incremental Systems Testing/Placement in Service. Designers shall describe the procedures required to perform pre-acceptance equipment testing, functional system testing, and certification of satisfactory operation for systems constructed in an incremental or segmental fashion. An example of such a case might be a medical gas system upgrade to an existing facility, constructed and placed into operation incrementally on a department-by-department or floor-by-floor basis. Similar procedures shall be provided for existing systems, which are incrementally taken out of service.

1.9.8 Seismic Upgrades.

1.9.8.1 Policy. The Department of Defense policy is to provide a framework to make the most effective use of medical Military Construction (MILCON) funds and to accommodate the concerns and legal requirements associated with the seismic risks faced by military hospitals. The Earthquake Hazards Reduction Act (P.L. 95-124), (reference 1k) and the National Earthquake Hazards Reduction Program, while indicating the need to ensure that critical facilities such as hospitals are serviceable following an earthquake, also recognizes that the measures necessary to implement seismic requirements are extremely expensive.

1.9.8.2 Corrective Actions. When existing facilities having seismic deficiencies are being programmed, the seismic problem will be considered along with all other factors used in developing the requirement for a construction project. When programming existing facilities that are located in areas of seismic vulnerability, a seismic evaluation of the facility will be done early in the project development process so that rehabilitation funds, if needed, could be programmed prior to project authorization. The corrective measures planned must address all factors

including earthquake safety, be consistent with system wide priorities, and be undertaken in a reasonable manner.

1.9.9 Types of Medical Facility Upgrade Surveys. Facility deficiency tabulation and upgrade surveys will be funded by the Military Department and based on the following guidance. The Using Service will provide the design agent a completed Checklist for Medical Facility Upgrade Survey Figure 1-3 to establish the scope of facility upgrade survey projects.

1.9.9 1 Basic Life Safety Survey. Facility is surveyed for compliance with: NFPA 101 (reference 1h), Chapter 13, "Existing Health Care Occupancies"; and part of NFPA 99 (reference 1i), Chapter 3, "Electrical Systems". This type survey only addresses the basic life safety and fire safety issues covered in NFPA 101, Chapter 13 and NFPA 99, Chapter 3 including: means of egress; protection; detection, alarm, and communication systems; building services; and essential electrical systems. The scope of this type survey is limited by using the exception allowed in NFPA 101, paragraph 7-1.2, so that the survey will not evaluate general compliance with other referenced NFPA Standards. However, the scope is extended to include the Life Safety Branch of the essential electrical system in accordance with NFPA 99, Chapter 3, because the condition of the life safety branch is vital to basic life safety in health care facilities. The end product of this survey is a limited "Deficiency Tabulation Report" that: identifies and prioritizes the deficiencies; proposes corrective solutions; and provides a cost estimate for corrections.

1.9.9.2 Life Safety and Utility Systems Survey. In addition to the requirements of the "Basic Life Safety Survey" this type survey also includes evaluation of the capacity and condition of building utility and support systems in relation to MIL-HDBK-1191 and using military department criteria. The end result of this survey is a "Deficiency Tabulation Report" that: identifies and prioritizes the deficiencies; proposes corrective solutions; and provides a cost estimate for corrections. This type survey could include: electrical systems including compliance with NFPA 70, "National Electrical Code" (reference 1j); communication and signal systems; heating, ventilating, and air conditioning systems; plumbing and medical gas systems; and transportation systems.

1.9.9.3 Facility Modernization Survey. In addition to the requirements for the "Life Safety and Utility Systems Survey" this survey provides a complete evaluation of the functional and facility deficiencies in relation to MIL-HDBK-1191 and using military department criteria. The end result of this survey is a proposed program and cost estimate to correct the functional, architectural, and engineering deficiencies to dramatically extend the useful life of a facility. This type survey could include: functionality, medical equipment, building systems, architectural finishes, mechanical, plumbing, electrical, communication, fire and life safety, and transportation systems.

1.9.9.4 Special Studies. Any of the surveys described above could include special studies where required for a specific facility. The more common types of special studies include:

a. Economic Analysis - New vs. add/alt construction vs. lease, etc. (Required for all projects with a projected cost of $2 million or more.)
b. Seismic/structural.
c. Hazardous/Toxic Substances - Asbestos, PCB's, Lead in paint or in potable water, mercury contamination, etc.
d. Maintenance and Repair Deficiencies.
e. Uniform Federal Accessibility Standard and Americans With Disabilities Act Accessibility Guidelines.

1.10 Types of Construction. Construction levels and building types are outlined in MIL-HDBK-1190, Chapter 1 (reference 1f). For facilities, the following apply:

1.10.1 Permanent Construction. Facilities built in the United States, its territories, or possessions are to be of permanent construction with a life expectancy of 25 years or more.

1.10.2 Semi-Permanent Construction. Facilities built outside of the United States, its territories, or possessions are to be semi-permanent construction with a life expectancy of 5 to 25 years unless the normal building practices of the host country, Status of Forces Agreements (SOFA), or other agreements stipulate permanent-type construction.

1.10.3 Contingency Facilities. Typical freestanding medical contingency facilities are to be semi-permanent construction with a life expectancy of 15 years, durable, and consistent with locally available building technology.

1.10.4 Temporary Construction. This type of construction may be authorized as an emergency measure or as an interim solution as approved and coordinated through formal request from the using Military Departments to TMA/DMFO. Follow individual Military Department rules and regulations for construction of these facilities.

REFERENCES

1a. Title 10, United States Code (USC).

1b. DoD Directive 6000.12, Health Services Operations and Readiness, April 29,1996

1c. Executive Order 12372, "Intergovernmental Review of Federal Programs", July 14, 1982

1d. DoD Directive 4165.61, "Intergovernmental Coordination of DoD Federal Development Programs and Activities", August 9, 1983.

1e. DoD Directive 5136.12, "Tricare Management Activity (TMA)," May 31, 2001.

1f. MIL-HDBK-1190,"Facility Planning and Design Guide".

1g. DoD Directive 3020.35, "Fallout Shelter Analysis".

1h. NFPA 101, "Life Safety Code."

1i. NFPA 99, "Health Care Facilities Handbook."

1j. NFPA 70, "National Electric Code."

1k. P.L. 95-124, "Earthquake Hazards Reduction Act"

1l. DoDI 6015.17, "Planning and Execution of Military Healthcare Facilities," May 4, 1995 DRAFT

1m. Army TM 5-852, "Arctic/Subarctic Construction Buildings," March 1988

FIGURE 1-1

SITE CHECKLIST

PROJECT NAME:_____ DATE:

PROJECT LOCATION:

1. ARE ROADS TO SITE ADEQUATE? Y or N

2. IS SITE IN FLOODPLAIN? Y or N

3. WHAT IS PROJECT TYPE? NEW or ADDITION/ALTERATION

4. IS THERE ANY ASBESTOS? Y or N

5. ARE THERE ANY OTHER CONTAMINATION OR SAFETY HAZARDS? Y or N
   TYPE: _____

6. ARE THERE ANY HISTORICAL STRUCTURES ON OR ADJACENT TO SITE? Y or N

7. SEISMIC ZONE OF SITE? 0 1 2 3 4

8. IS THERE ANY EXPANSIVE SOIL AT THIS SITE? Y or N

9. WHAT IS THE GENERAL BEARING STRATA DEPTH IN THIS AREA?

10. ARE SPECIAL FOUNDATIONS REQUIRED? NONE PIERS MAT PILES
    OTHER:_____

11. WHAT IS WATER TABLE LEVEL AT THIS SITE?

12. IS NOISE A PROBLEM? Y or N IF Y, WHAT IS NC-LEVEL?

13. ARE THERE ANY EXISTING STRUCTURES TO BE DEMOLISHED? Y or N

14. DO ANY DISPLACED FUNCTIONS NEED TO BE REPLACED? N/A, Y or N
    IF YES, WHAT ARE THEY? _____

15. DO ANY EASEMENTS CROSS THE PROPERTY? Y or N
    IF YES, WHAT ARE THEY?

16. WHAT IS BASIC SIZE AND SHAPE OF SITE?

17. WHAT IS SLOPE OF SITE? LEVEL 3-8% 9-15% 16-25% >25%

18. IS THERE ANY SIGNIFICANT VEGETATION? Y or N

19. WHAT IS THE PREVAILING WIND DIRECTION?

FIGURE 1-1 (CONTINUED)

20. WHAT IS AVERAGE ANNUAL RAINFALL? _____ INCHES

21. WHAT IS AVERAGE ANNUAL SNOWFALL? _____ INCHES

22. WHAT ARE THE CLIMATIC CONDITIONS? WIN DB____ SUM DB____ WB

23. DOES WATER SUPPLY NEED TO BE TREATED? Y or N

24. WHAT IS THE AVAILABILITY OF UTILITIES TO THE SITE?

SYSTEM	DISTANCE TO CONNECTION POINT	CAPACITY AVAILABLE TO SITE	
WATER	_____ FEET	_____GPM	_____PSI
FIRE WATER	_____ FEET	_____GPM	_____PSI
CLEAN STEAM	_____ FEET	_____#/HR	_____PSI
UNTREATED STEAM	_____ FEET	_____#/HR	_____PSI
HI-TEMP HOT WATER	_____ FEET	_____GPM	_____TEMP
CHILLED WATER	_____ FEET	_____GPM	_____TEMP
SANITARY SEWER	_____ FEET	_____GPM	
STORM SEWER	_____ FEET	_____GPM	
GAS	_____ FEET	_____GPM	_____CFM
ELECTRICAL-Primary	_____ FEET	_____KVA	_____KILOVOLT
ELECTRICAL-Alternate	_____ FEET	_____KVA	_____KILOVOLT
CABLE TV	_____ FEET		
FIBER OPTIC LINE	_____ FEET		
COMMUNICATIONS	_____ FEET	_____SWITCH CAPACITY	
PATH. WASTE	_____ FEET	_____#/DAY	

25. WHAT IS THE FREQUENCY OF LIGHTNING?

26. Is the site coordinated with the installation and tied into the installation Master Plan?

27. Has the history of the site been researched and investigated at least fifty years prior?

28. ADDITIONAL REMARKS: (Add additional pages if necessary):

CERTIFICATION OFFICIAL:

NAME:

TITLE:

ORGANIZATION:

SIGNATURE:

FIGURE 1-2

LOGISTICAL RESPONSIBILITY FOR BUILDING SYSTEMS

Special Instructions. The items listed in this section shall be included in construction cost estimates as appropriate.

ITEM	Logistical Responsibility[1]
BUILDING AND GROUNDS	
Hospital buildings (including administration)	A
Medical Clinic buildings	A
Dental Clinic buildings	A
Clinical and Medical Research Laboratory buildings	A
Animal holding buildings	A
Maintenance shop buildings	A
Garages and automotive shelters	A
Power plant buildings (steam and/or electrical)	A
Sewage disposal plant structures	A
Medical helicopter/air evac landing pads	A
Chapel	A
Recreational building (including Red Cross, gymnasiums and swimming pools)	A
Recreational fields (including tennis courts, baseball diamonds, etc.)	A
Guard and sentry boxes, gate houses	A
Incinerator buildings	A
ELECTRICAL SERVICE	
Wiring (including material)	A
Conduits	A
Switches, panels boxes, service outlets	A
Transformers (step-down and distribution)	A
Lighting, fixtures (including initial lamping)	A
Generating equipment (including emergency)	A
Explosion-proof fixtures	A
Power conditioning/surge protectors	A
HEATING, AIR CONDITIONING, AND VENTILATION	
Air conditioning (including packaged units)	A
Boiler plants and water heaters	A
Heat and steam distribution systems	A
Central vacuum cleaning system	A

[1] See Para 16.2.1 for definition.

ITEM	Logistical Responsibility[1]
PLUMBING	
Piping valves, fittings, and outlets	A
Toilet, bath, and lavatory fixtures (including shower stalls, mirrors, towel racks, toilet paper dispensers, paper towel dispensers, soap dispensers, and bed pan washers	A
Sewer systems and plants	A
Gas, air pressure and suction, and medical gas systems	A
Automatic sprinkler systems	A
Fire protection system (water)	A
REFRIGERATION	
Refrigeration (walk-in)	A
Deep freeze (walk-in)	A
Built-in morgue refrigerators	A
COMMUNICATIONS:	
LAN - Local Area Network:	
Conduit, Boxes, Wiring, Patch panels, outlets	A
LAN Equipment	C
Telephone System, Complete:	
Interior Conduits, Boxes, Outlets, Wiring	A
Instruments, Outside cable and support work	A
Interior Telephone Switching Equipment	A
Supporting Expansion Work at Main Exchange	A
Intercom systems, Complete:	
Conduits, Boxes, Wiring, and Equipment	A
Public Address System, Complete:	
Conduits, Boxes, Wiring, and Equipment	A
Television System:	
Entertainment:	
Conduits, Boxes, Wiring, Antennas	A
Head Ends and Distribution Equipment	A
Mounting Brackets and Low Voltage Supplies	A
Television Receivers	C
Training:	
Conduits, Boxes, Wiring, Distribution Eq.	A
Cameras, Monitors, Control Equipment	C
Security:	
Conduits, Boxes, Blank Outlets	A
Cameras, Monitors, Wiring	C
Control Equipment	C

ITEM	Logistical Responsibility[1]
COMMUNICATIONS - (Continued)	
Patient Physiological Monitoring:	
Conduits, Boxes, Blank Outlets	A
Equipment	C
Staff Radio Paging Systems, Complete:	
Conduits, Boxes, Wiring, Equipment	A
Other Radio Systems, i.e., EMS, etc.:	
Conduits, Boxes, Site Support Work	A
Antennas, Equipment, and Wiring	C
Card Access System, Complete:	
Conduits, Boxes, Wiring, Equipment	A
Nurses' Call Systems, Complete:	
Conduits, Boxes, Wiring, Equipment	A
Central Dictating System:	
Conduits, Boxes, Wiring, Outlets	A
Dictation Equipment	C
Intrusion detection System:	
Conduits, Boxes, Blank Outlets	A
Wiring, Sensors and Control Equipment	A
Fire Detection and Alarm System, Complete	A
Clock Systems:-	
Central Clock System, Complete	A
Battery Clocks	C
TRANSPORTATION SYSTEM	A
SIGNAGE (INTERNAL/EXTERNAL)	A

FIGURE 1-3

CHECKLIST FOR MEDICAL FACILITY UPGRADE SURVEYS

(Select one "Type of Survey" and any "Special Studies" required)

A. TYPES OF SURVEY.

YES NO 1. BASIC LIFE SAFETY SURVEY. Survey will address compliance with the following standards:

a. NFPA 101, Chapter 13, "Existing Health Care Occupancies". Use exception allowed in NFPA 101, para. 7-1.2, so that the survey will not evaluate general compliance with referenced NFPA standards.

b. NFPA 99, Chapter 3, "Electrical Systems" as it relates to Essential Electrical System - Life Safety Branch only.

YES NO 2. LIFE SAFETY AND UTILITY SYSTEMS SURVEY. Survey will address compliance with the following standards:

a. NFPA 101, Chapter 13, "Existing Health Care Occupancies" including general compliance with referenced standards per NFPA 101, paragraph 7-1.2.

b. The building utility systems will be surveyed in relation to: MIL-HDBK-1191, "DoD Medical and Dental Treatment Facilities Design and Construction Criteria"; and Military Department Criteria. The following systems will be addressed:

YES NO Electrical systems.
YES NO Communication and signal systems.
YES NO HVAC.
YES NO Plumbing.
YES NO Medical gas systems.
YES NO Transportation and material handling systems.
YES NO Other. Provide list.

_____
_____
_____

YES NO 3. FACILITY MODERNIZATION SURVEY. Survey will address compliance with the following standards:

a. NFPA 101, Chapter 13, "Existing Health Care Occupancies" including general compliance with referenced standards per NFPA 101, paragraph 7-1.2.

CHECKLIST FOR MEDICAL FACILITY UPGRADE SURVEYS

(Select one "Type of Survey" and any "Special Studies" required)

b. The building will be surveyed in relation to: MIL-HDBK-1191, and Military Department Criteria. The following systems will be addressed:

YES NO Site and Parking issues.
YES NO Utility services.
YES NO Structure.
YES NO Exterior Finishes, roofing, glazing, etc.
YES NO Medical/Functional Requirements.
YES NO Architectural finishes.
YES NO Equipment and Furnishings
YES NO Waste Management System.
YES NO Transportation and material handling systems.
YES NO Electrical systems.
YES NO Communication and signal systems.
YES NO Energy Usage/System Efficiency Survey.
YES NO HVAC.
YES NO Plumbing.
YES NO Medical gas systems.
YES NO Other. Provide list.

_____
_____
_____

B. SPECIAL STUDIES.

YES NO Economic Analysis. (Attach scope of analysis).
YES NO Seismic/structural evaluation.
YES NO Hazardous/Toxic substance survey.
____ Asbestos survey
____ PCB survey
____ Lead survey (in paint or in potable water)
____ Mercury contamination
____ Underground Fuel Tank Survey.
____ Other. Provide list, _____.
YES NO Maintenance and Repair Deficiency survey.
YES NO Uniform Federal Accessibility Standard and Americans with Disabilities Act Guidelines Compliance.
YES NO Other. Provide list._____.

SECTION 2: DESIGN PROCEDURES, SUBMITTALS, AND DOCUMENTATION

2.1 General. This section defines the minimum OASD-HA (TMA/DMFO) requirements for design procedures, submittals, and documentation for a typical DoD Medical MILCON project. The Design Agent(s), in coordination with the using Military Service(s), may establish additional or lesser project specific requirements to meet specific project requirements. Submittal requirement variations for TMA/DMFO submissions must have written TMA/DMFO approval.

2.2 Design Goals.

2.2.1 Scope and Criteria. The goal during concept design (0 to 35%) development is to produce concept design documentation which meets project requirements and complies with criteria while establishing final project scope and an appropriate Programmed Amount (PA). Final scope and PA will be based on the approved concept submittal and validated cost estimate.

2.2.2 Design to Cost. The goal during the final design phase (35 to 100% design completion) is to produce a set of construction documents within the PA and/or DDA established at the concept design approval. If design requirements or refinements cause the estimated project cost to exceed the established PA, the Design Agent with participation of the using Military Department, will present cost adjustment or reduction alternatives to TMA/DMFO before completing the design documents.

2.2.3 Design Schedules.

2.2.3.1 Major Construction. For specified location projects, the TMA/DMFO goal is to be at concept (35%) design by 1 August of the year prior to planned budget execution. The Design Agent must request written approval from TMA/DMFO for late submission. The goal during final design is to complete design in time for a construction contract award during the first quarter of the program year of the project.

2.2.3.2 Unspecified Minor Construction. For Unspecified Minor Construction (DODI 4270.36, reference 2a), the TMA/DMFO goal is to have designs complete and projects ready for advertisement within 12 months of the date of the original TMA/DMFO Design Authorization Memorandum.

2.3 Design Sequence and Responsibilities.

2.3.1 2807 Action. TMA/RM issues the Section 2807, Title 10 USC (reference 2b) Congressional notification. Typically, the 2807 notification is conducted concurrently with the Design Authorization to select an Architect/Engineer. This notification is required for all projects where the funded cost of design is expected to exceed $500,000 (typically a projected construction cost of $3.5 million and up). (See Figure 2-1).

2.3.2 Design Funds. TMA/RMFO sub-allocates design funds to the Design Agents to achieve the authorized level of design in accordance with Figure 2-1.

2.3.3 Design Authorization. The TMA/DMFO issues the design authorizations to the Design Agent with an information copy to the using Military Department, as appropriate, to meet design and programming

milestones in Figure 2-1. The Design Agent manages design in accordance with established policies and procedures unless otherwise established in coordination with the user and TMA/DMFO during initial project acquisition strategy planning. Separate design authorization memoranda are normally issued for A-E Selection, Concept Design, and Final Design. However, separate or combined DA's may be issued for design-build projects. The Design Agents shall not pursue any level of design beyond that authorized in writing by TMA/RM.

Figure 2-1

DoD MEDICAL MILITARY CONSTRUCTION TIMETABLE

FOR PLANNING, BUDGETING, AND EXECUTION OF A "TYPICAL" MILCON" PROJECT IN THE FY XX PROGRAM

THIS IS A MINIMUM TIMETABLE WHICH DOES NOT PRECLUDE EARLIER DESIGN STARTS FOR OCONUS, LARGE, OR COMPLEX PROJECTS OR TO MEET ALTERNATIVE EXECUTION STRATEGIES (E.G., DESIGN-BUILD, etc) DEVELOPED JOINTLY BY TMA, THE AGENT, AND THE SERVICE--CRITICAL MILESTONES ARE IN BOLDFACE

ACTIVITY	FY 02	FY 03	FY 04
· Begin FYXX Planning Year	FEB 98	FEB 99	FEB 00
· Begin FYXX EA Efforts (Services)	JUL 98	JUL 99	JUL 00
· FYXX EA Efforts Completed (Services) and Validated (DMFO) · Preliminary Scope Available (Services) · Determine Execution Strategy (Services/Design Agent/DMFO) . Submit Project Book to TMA	**APR 99**	**APR 00**	**APR 01**
. Final PFD and DD Form 1391 validated by TMA **· Release Design Authorization (TMA)** **· 2807 Action (TMA)** **· Issue 35% Design Authorization (TMA)**	**MAY 99** **OCT 99**	**MAY 00** **OCT 00**	**MAY 01** **OCT 01**
· Best Concept Design Cost Estimate to TMA (Design Agent)	**JUL 00**	**JUL 01**	**JUL 02**
· 35% Design Submission to TMA (Design Agent)	**AUG 00**	**JUL 01**	**JUL02**
· Scope and PA Approval and 35% Design Certified (TMA)	SEP 00	AUG 01	AUG 02
· FYXX Budget Submitted to OSD(Comp) (TMA)	SEP 00	SEP 01	SEP 02
· Issue Final Design Authorization (TMA)	**OCT 00**	**OCT 01**	**OCT 02**
· FYXX MILCON Program to Congress (DOD)	**JAN 01**	**JAN 02**	**JAN 03**
· Ready to Advertise (Design Agent)	SEP 01	SEP02	SEP03
· FYXX Funds Available (TMA)	Nov 01	NOV 02	NOV 03

2.3.3.1 Exceptions. Some larger, more complex, or OCONUS projects may require a greater level of effort and more time to achieve the concept (35%) design milestone in Figure 2-1. When this occurs, the Design Agent, in coordination with the using military department, may request variations to the milestones in Figure 2-1 from TMA/DMFO.

2.3.4 Architect-Engineer (A-E) Selection Authorization. This is authorization to synopsize, slate, select an A-E and to negotiate, but not to award a contract, or proceed with design. Following authorization by TMA/RM, the Design Agent selects an A-E following their established procedures. The using Military Department may participate in A-E selection in accordance with established Memoranda of Understanding (MOUs). TMA/DMFO may also participate when so specified in the design authorization or when requested by the using Service and/or the Design Agent.

2.3.5 Concepts (0 to 35%) Design Authorization. This is authorization to award an A-E contract and to proceed to the concept (35%) level of design. This authorization will normally be issued when a project has a completed economic analysis, an approved Program For Design (PFD), the project is in the appropriate Program FY to start design action, and design funds are available. Normal presentation requirements to the TMA/DMFO are the S2 (preliminary concept design) for scope approval and the S4 (final concept/35% design)for cost approval. The Concept Design phase is complete when TMA/DMFO approves the S4 submittal, scope and cost estimate.

2.3.6 Concept (35%) Review and Certification. Following design agent presentation and certification of the concept submittal, TMA/DMFO certifies 35 percent design completion and project cost estimates by 15 September of the year prior to planned budget execution. The TMA/DMFO will also notify the Design Agent and the using Military Department if the Concept Design is approved, with or without comments, or disapproved, with comments.

2.3.7 Final Design Authorization. This is authorization to proceed from concept (35%) to final design. TMA/RM normally provides this authorization after the concept design is certified complete by the Design Agent and approved by the TMA/DMFO.

2.3.8 Design Coordination. Designs will be developed and managed with close coordination between the Design Agent, using Military Department representatives, and TMA/DMFO. TMA/DMFO will be advised of issues relating to scope, design or construction cost, criteria, policy and procedure, and/or schedule.

2.3.9 Design Changes. The Design Agent, in coordination with the using Military Department, will submit proposed concept design scope refinements and final design scope changes to TMA/DMFO for approval. After S2 approval by TMA/DMFO, all scope increases above the TMA/RM authorized amount will be submitted to TMA/DMFO for approval with the S4 presentation. After the concept design approval by TMA/DMFO, all scope increases in area and/or cost, or which add new functions will be submitted to TMA/DMFO for approval with justification prior to incorporation into the design. The Design Agent may decide whether or not design should be suspended pending TMA/DMFO action. Design changes which jeopardize the Design Agent's ability to meet the required design schedule will be avoided, unless necessary to meet criteria or mission requirements.

2.3.10 Stopped or Deferred Designs. Decisions to stop or defer designs will be made by TMA/DMFO, in coordination with the design agent and the using Service. Written direction will be provided to the Design Agent and the using Service.

2.4 Reporting Requirements. The Design Agents will establish design cost targets, maintain accurate records on design fees, schedules, construction cost, and other project data and report this information as required below.

2.4.1 Notification of Concept Design Start. The Design Agent will notify TMA/DMFO and using military department of the A-E's name, and the design schedule within seven calendar days after the A-E has been issued a Notice-To-Proceed (NTP) to concept (35%) design.

2.4.2 Notification of Final Design Start. The Design Agent will notify TMA/DMFO of the schedule for the Final Design within seven (7) calendar days after the A-E has been issued a NTP to design completion.

2.4.3 Quarterly Execution Reports. The Design Agent shall submit the following reports to TMA/DMFO and using Military Department Agencies no later than three working days prior to each Quarterly Execution meeting. Automated reports currently in use by the Design and Construction Agents which contain the requested information are acceptable substitutes for the report formats listed below: (Fig 2-3)

2.4.3.1 Design Funds Status Report. Provide in format of Figure 2-2 for all projects authorized for design by TMA/RM.

2.4.3.2 Project Status Report. Provide in format of Figure 2-3 for each project authorized for design by TMA/RM.

2.4.3.3 MILCON Funds Status Report. Provide a report in Figure 2-4 format for all appropriated projects.

2.5 Design-Build Projects. For the vast majority of projects, the traditional facilities acquisition method of firm-fixed-price design-bid-build will continue to be used. However, other non-traditional project delivery systems, to include design-build and third party contracting, should be considered when appropriate. With the concurrence of the Using Military Department, the Design Agents may elect to procure medical facilities using the Design-Build process. The Request For Proposal (RFP) for a medical facility shall include a sufficient design developed to the concept level to effectively establish scope and cost. The Design Agent, in consultation with the Using Military Department, shall determine for each project whether specifications shall be prescriptive, performance, or a combination thereof.

2.6 Design Submittals and Documentation Requirements.

2.6.1 Economic, Architectural, Engineering, and Environmental Studies. The design is to be supported by architectural, engineering, economic, and environmental evaluations of those features, which contribute most to the construction cost, energy efficiency, and environmental impact. The design is to provide the optimum combination for an efficient and

effective facility at the most economical cost with the least adverse environmental impact. Such studies shall consider life-cycle-cost of the facility, and not just the initial construction cost. Specific information concerning study requirements will be provided in accordance with appropriate laws and Executive Orders as defined by the Design Agent(s). Economic Analyses (EA) of new versus addition/alteration will be paid for and accomplished by the appropriate Military Department with their operation and maintenance funds for projects with a program amount of $2.0 million and over prior to any design authorization being issued.

2.6.2 Value Engineering Study (VE). The Design/Construction Agent will establish procedures for conducting VE studies in accordance with Office of Management and Budget Circular No. A-131 and Section 432, Title 41, USC, Value Engineering. VE studies consist of investigations of certain high-cost aspects of a design to determine if an alternate way exists to achieve an improved design, which meets all functional requirements, at a lower life—cycle-cost.

2.6.3 Design Documentation. The Design Agent, in coordination with the using military department, is responsible for the design documentation on each project. The Contract A-E will be held fully accountable for design in accordance with the "Responsibility of the Architect-Engineer Contractor" clause set out in FAR 52.236-23. However, Design Agents shall provide for peer review of appropriate portions of design documents to assure the proper functioning of the Architect-Engineer’s own Quality Control effort.

2.6.3.1 Submissions required for TMA/DMFO. The design documentation for Schematic and Concept level design, described in B.2 and B.4 of Appendix B will be submitted to TMA/DMFO for approval.

2.6.3.2 Appendix B. Appendix B provides a description of general submittal and documentation requirements, which are appropriate for a typical medical facility. For minor facilities, such as medical warehouses, contingency facilities, or small outpatient clinics, Design Agents may deviate from these submission requirements as practically and economically appropriate for the scope and complexity of the project.

2.6.4 Schematic Design Submittal (S2). This submittal includes development of the room-by-room floor plans, elevations, and initial analysis of the building systems. The primary purpose of this submittal and review is to identify and resolve all major space program deficiencies at an early stage in design and "fix" the footprint of the building. The Design Agent and using Military Department representatives, if required based on the project acquisition plan, will present the reviewed S2 to TMA/DMFO. Requests for scope revisions with justification should be submitted at this time. Scope changes will not be entertained after approval of S2 unless fully justified. TMA/DMFO will provide approval/disapproval, with review comments, within 14 calendar days of the submittal.

2.6.5 Concept (35 Percent) Design Submittal (S4). This is the technical Concept Design submittal. The design agent will certify to TMA/DMFO that design is 35 percent complete. The Design Agent, with using Military Department coordination and participation, will submit a summary of the reviewed S-4 to TMA/DMFO. Final scope and PA (cost) shall be determined with this submission. All issues regarding costs, Value Engineering Study (VE), constructability, phasing, and any other special studies must be

resolved, though the results of all studies may not be incorporated prior to presenting this submission to TMA/DMFO for approval.

2.7 Rendering. If the design agent requires a rendering, then a photographic copy of the rendering shall be provided to TMA/DMFO and the military department. The rendering should be prepared either before or after the concept submittal is approved by TMA/DMFO. The TMA/DMFO copy of the rendering should be titled, matted, glazed with nonglare glass or plexiglass and framed in brushed aluminum or other format prescribed by the Design Agent.

2.8 Design Review Policy. Prior to use of a design documents package for construction, the Design Agent shall conduct an independent review to evaluate the completeness and quality of the documents. This review does not replace or nullify the designer's own quality control process or review responsibilities. The A-E will be held fully accountable for design in accordance with the "Responsibility of the Architect-Engineer Contractor" clause set out in FAR 52.236-23. The Design Agent’s review is to establish that the designer has fulfilled the documentation requirements of his contract, adequately addressed any unique government requirements, and provided documents exhibiting a level of accuracy, coordination, completeness, clarity, and absence of error indicative of a quality design and an effective designer quality control procedure. In addition, A-E design shall be accomplished or reviewed and approved by architects, engineers or other professionals registered to practice in the particular professional field in accordance with FAR 52.236-25.

2.8.1 Review Agency Qualifications. Designs prepared by private A-E firms or geographical elements of the Design Agent will be reviewed by the Design Agent’s Medical Facilities Design Office (Center of Expertise for COE), employing a highly qualified, multi-disciplinary team of engineer and architect professionals with extensive experience, and day-to-day involvement in, medical facility designs and technical issues. The Design Agent’s Medical Facilities Design Office or Center of Expertise shall review all medically unique aspects of the design, and all aspects of design shown to be historical areas of concern for medical facilities. Design Agents may designate qualified engineer and architect professionals without extensive experience in the medical field to review general aspects of medical facility designs.

2.8.2 Constructability Review. The Design Agent shall provide for an independent Constructability Review for all medical facility projects. Constructability is defined as the ease with which a designated project can be administered, bid, built, enforced, and understood. Constructability must be strongly emphasized by the designer, and Design Agent, throughout the entire planning and design process. As a minimum, these reviews should occur at both the 35% and Final Design completion stages.

2.9 Design Management Plan. For each project, the Design Agent shall develop a plan for managing the design of the facility. This plan shall identify project schedule and milestones.

2.10 Construction Cost Estimates. Preparation, review, and approval of construction cost estimates shall be in accordance with established design agent practices. All estimates prepared by A-E firms will be reviewed and validated by the cost engineering element of the design agent. Prior to the submittal to TMA/DMFO, estimates prepared by in-house personnel will be reviewed in accordance with established procedures. The quality and integrity

of cost estimates will not be compromised in order to meet completion deadlines or imposed budget requirements.

2.11 Final Design (35 percent to 100 percent). The final design phase may be initiated only after approval of Concept Design by the TMA/DMFO. If, in the preparation of final design, it is necessary to deviate substantially from the approved Concept Design, such as the rearrangement of a major medical department or a change in the interrelationship of functional elements, design may be suspended and the pertinent facts and justifications concerning the deviations will be submitted for review and approval by TMA/DMFO.

2.12 Comprehensive Interior Design (CID). The final design phase, at option of the using Military Department, may include a CID effort (using MILCON P&D funds) for furniture and accessory selection, layout and identification, and documentation for procurement. Subsequent selections of furnishings and medical equipment are to be coordinated with the CID.

2.13 Final Submittal to TMA/DMFO . When the design is complete, the Design Agent will submit a copy of the final documents (i.e. CD-ROM, drawings, specification, cost estimate, instructions to bidders, etc.) to TMA/DMFO. Along with this package, the Design Agent shall provide a memorandum to TMA/DMFO certifying that the design has been completed and that all technical requirements and cost criteria approved at the 35 Percent Design stage have been incorporated into the Final Design.

REFERENCES

2a. DoD Directive 4270.36, "DoD Emergency, Contingency and Other Unprogrammed Construction Projects." May 17,1997

2b. Section 2807, Title 10 USC, "Architectural and Engineering Services and Construction Design."

2c. DOD Directive 6015.1&, "Department of Defense Policies for Planning and Execution of Military Healthcare Facilities." (DRAFT)

2d. DoD Directive 4245.8, "Value Engineering."

FIGURE 2-2
DESIGN FUNDS STATUS REPORT

PROJECT	ACT DES %	EST 0-35% COST	EST 35-100% COST	TOTAL DESIGN COST	DESIGN FUNDS AVAIL	DELTA

FIGURE 2-3
PROJECT STATUS REPORT

PROJECT: FY: ____ NUMBER: _____ USING SERVICE:_____ LOCATION: _____
Major/Minor/BRAC _____

TITLE:

FUNDS: Programmed Amount (PA):

DESIGN	CONSTRUCTION	CONTINGENCY
DDA:	AWARD CWE:	STARTING TOTAL:
CWE:	CURRENT CWE:	CHANGES TO DATE:
		PENDING CHANGES:
		REMAINING BALANCES:

STATUS: TMA/DMFO AUTH: _____ LEVEL OF DESIGN (%): _____ CONSTRUCTION COMPLETE (%): SCH. ACT._____

EVENT	SCHEDULE DATE	ACTUAL DATE	REMARKS
2807 NOTIFICATION			
A-E SELECT AUTHORITY			
A/E SELECTION COMPLETE			
DEFTAB SUBMIT TO TMA/DMFO			
DEFTAB APPROVED BY TMA/DMFO			
35% DESIGN AUTHORITY			
AWARD A/E CONTRACT			
A-E SUBMITS S-1			
A-E SUBMITS S-2			
S-2 SUBMITTED TO TMA/DMFO			
TMA/DMFO S-2 REVIEW COMPLETE			
A-E SUBMITS S-3			
A-E SUBMITS S-4			
35% SUBMITTED TO TMA/DMFO			
35% APPROVED BY TMA/DMFO			
100% DESIGN AUTHORITY			
A-E SUBMITS 65%			
A-E SUBMITS 100%			
A-E SUBMITS FINALS			
REQUEST ADVERTISE AUTH.			
ADVERTISE AUTHORITY			
BID OPENING			
AWARD AUTHORITY			
CONST. CONTRACT AWARD			
CONST. COMPLETED			
BENEFICIAL OCCUPANCY			
FACILITY OPERATIONAL			

ISSUES:

FIGURE 2-4
MILCON FUNDS STATUS REPORT

PROJECT TITLE/ LOCATION	USING MIL DEPT	PA	SUBALLOCATED FUNDS	EST CWE	EST BID DATE	ACT CWE	ACT AWARD DATE	%CONST SCH	%CONST ACT	COMP

FIGURE 2-5
Instructions for Preparing Gross Area Tabulation.

This is the square meter (foot) quantity number used on the project DD Form 1391. The gross area documentation consists of calculation and tabulation of the building gross floor area illustrated with small scale, single-line dimensioned drawings as demonstrated in the attached figure. The following procedures will be used to calculate the gross building area.

a. The gross area includes the total area of all floors with a floor-to-ceiling height of 2134 mm (7 ft) or greater, including basements, mezzanines, penthouses, mechanical and electrical spaces, enclosed loading docks, and ambulance garages. Gross area is measured from the exterior surfaces of all enclosing walls except where the exterior wall surface overhangs the exterior window surface by one foot or more. In this case, the gross area is measured from a point one-half the distance between the exterior plane of the window glazing and the outermost plane of the wall.

b. The following spaces are counted as one-half of the actual gross area:

(1) Exterior balconies and porches.
(2) Covered but not enclosed walks, passageways, ramps, ambulance shelters, and entry canopies.
(3) Exterior open stairs (covered or uncovered).

c. The following shaft type elements are counted in the gross area of one floor only: atria, unenclosed floor openings, stairs, escalators, elevators and lifts, mechanical and electrical shafts, and other shafts connecting two or more floors.

d. The following areas are not counted in the gross area: spaces with less than seven feet floor-to-ceiling height; exterior insulation applied to an existing building; exterior, uncovered, unenclosed terraces, ramps, stoops, and pads; open courtyards; utility tunnels; equipment yards; and crawl spaces. Crawl spaces with a clear height of seven feet or greater are not counted in the gross area provided the clear height of seven feet and greater is the result of the natural site terrain or foundation construction.

e. The gross area for site and supporting facilities, such as the central utility plant, pump house, and utility buildings, which are not included in the Program For Design is tabulated separately from the main building gross area tabulation. The gross area of all site and supporting facilities which are identified in the Program for Design is accounted for in the main building gross area tabulation.

f. A separate tabulation is required for the mechanical area. This tabulation will include the net area of all mechanical, electrical, and telecommunication rooms and utility shafts. Walls, partitions and structural elements associated with these spaces are included in the general gross area not the mechanical area. Vertical circulation spaces, such as elevators, escalators, lifts, stairs, and trash chutes, are counted in the general gross area not the mechanical

area. Mechanical, plumbing, electrical, and telecommunication shafts are counted in the mechanical area.

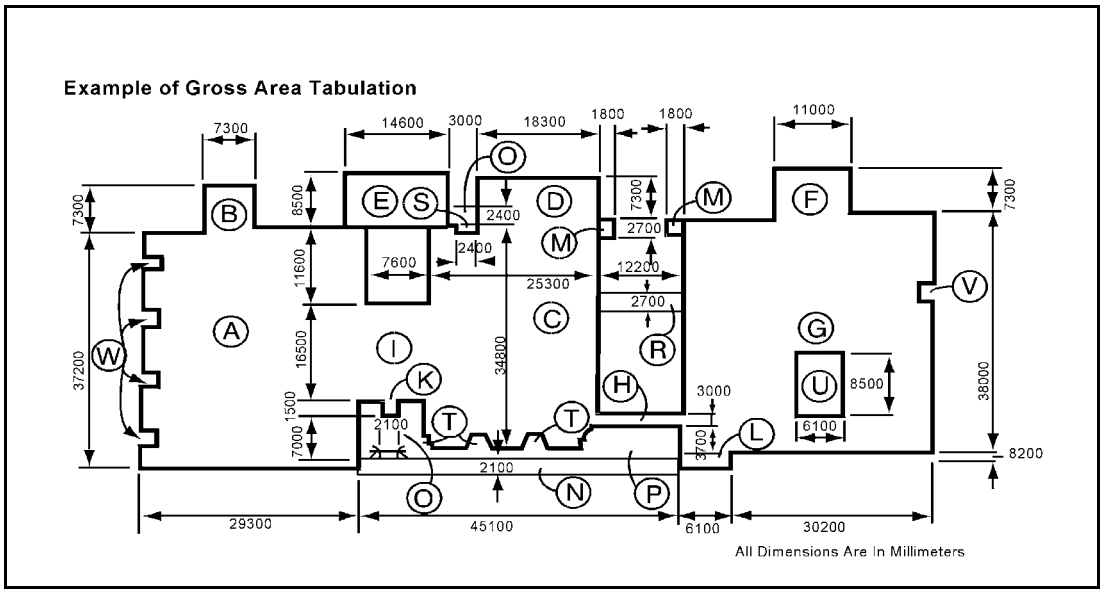

GROSS AREA TAKE-OFF

Plan Area Reference/Type		Plan Dimensions			Scope	GSM
A	bldg. space	29300	x 37200	x	1.0	1089.96
B	"	7300	x 7300	x	1.0	53.29
C	"	25300	x 34800	x	1.0	880.44
D	"	7300	x 18300	x	1.0	133.59
E	"	8500	x 14600	x	1.0	124.10
F	"	7300	x 11000	x	1.0	80.30
G	"	36300	x 38000	x	1.0	1379.40
H	"	3000	x 12200	x	1.0	36.60
I	"	7600	x 16500	x	1.0	125.40
K	"	1500	x 2100	x	1.0	3.15
L	"	700	x 6100	x	1.0	4.27
M	entry canopy	1800	x 2700x2	x	.5	4.86
N	covered walk	2100	x 45100	x	.5	47.35
O	"	2100	x 7000	x	.5	7.35
P	"	2100	x 3700	x	.5	3.88
Q	covered porch	2700	x 3000	x	.5	4.05
R	covered walk	2700	x 12200	x	.5	16.47
S	covered porch deduct	1200	x 2400	x	-.5	-1.44
T	alcove deduct	1700	x 1800x3	x	-1.0	-9.18
U	courtyard deduct	6100	x 8500	x	-1.0	-51.85
V	alcove deduct	1200	x 2400	x	-1.0	-2.88
W	"	1200	x 1800x4	x	-1.0	-8.64

First Floor Total Gross Area 3920.47

FIGURE 2-5

FIGURE 2-6

NET AREA TABULATION

The net floor area of a space is measured from the interior surface of the walls that enclose the space. Exterior walls, interior partitions, columns, structural members, and internal circulation space for other than individual occupancy(ies) are excluded from the net floor area.

Provide a tabulation of net areas, by room, in thirteen columns as follows:

a) Room Code Number From Program For Design (PFD),
b) Functional title of room,
c) Number of rooms,
d) Net area of room from Program For Design,
e) Total net space programmed for rooms [Product of cols.(c) x (d)],
f) If Add/Alt - allocated to unaltered existing space,
g) If Add/Alt - allocated to altered existing space,
h) If Add/Alt - allocated to new space,
i) Net individual room areas as designed,
j) Difference between program and design [columns (i) minus (d)],
k) Percent variation between program and design [cols (j)/(d)x100%],
l) Notes. Provide justification if the deviation listed in k) is more than 10 percent. Rooms of 4.65 m^2 (50 ft^2) or less are exempt from the 10 percent justification process. The justification is to indicate why the deviation was made, not just who authorized it. As a minimum, the spaces considered irreducible are Operating Rooms, Examination Rooms, Treatment Rooms, Provider's Offices, Emergency Rooms, Dental Treatment Rooms, Labor Rooms, Delivery Rooms, Diagnostic and Therapeutic Radiology Rooms, and Patient Bedrooms/Toilets. Depending on function and mission, there may be other rooms identified by the using Military Department which will be identified as irreducible, and,
m) Provide a total summary of each column.

After the above is accomplished, prepare a Net to Gross ratio in the same format as provided in the Program For Design (PFD).

FIGURE 2-6 (continued)

NET TO GROSS SQUARE METER (GSM)[1] CALCULATIONS

FACILITY W/O HARDENING
NEW/REPLACEMENT PROJECT

ALLOWANCES/CATEGORIES

	MEDICAL/ DENTAL CLINICS	AMBULATORY HEALTH CARE FACILITIES	STATION/ COMMUNITY HOSPITALS	REGIONAL MEDICAL CENTERS
TOTAL NSM[2]	NSM	NSM	NSM	NSM
MECHANICAL	11.0% of NSM	13.0% of NSM	14.0% of NSM	16.0% of NSM
CIRCULATION of NSM	41.0% of NSM	41.5% of NSM	42.0% of NSM	46.0%
WALLS & PARTITIONS	14.0% of NSM	15.0% of NSM	15.5% of NSM	15.5% of NSM
HALF AREAS	1.5% of NSM	1.5% of NSM	1.5% of NSM	1.5% of NSM
FLEXIBILITY	1.0% of NSM	1.0% of NSM	1.0% of NSM	1.0% of NSM
TOTAL GSM	168.5% of NSM	172.0% of NSM	174.0% of NSM	180.0% of NSM

NOTES:

1. GSM = Gross Square Meter

2. NSM = Net Square Meter

3. For hardened facilities, increase walls & partitions allowance by 1.0%; and half areas allowance by 2.0%.

4. For addition/alteration projects, up to 15% of the gross total alterable space may be added to the flexibility allowance to offset physical constraints in the existing facility. Gross alterable space is defined as the existing net space, interior partitions, departmental circulation, and mechanical spaces within the departmental/functions included in the Program for Design, plus general circulation immediately adjacent to the affected departments/functions. This increased allowance, which for programming and planning purposes will be considered to be new or addition scope, must be validated during design.

SECTION 3: SITE DEVELOPMENT

3.1 General. This section provides guidance on the siting of medical facilities. Each new facility or addition will be sited in conformance with an approved installation master plan developed by the using Military Department. The site will be coordinated with the using Military Department representative (i.e. Army Health Facility Planning Agency, Navy Bureau of Medicine and Surgery, and/or Air Force Health Facilities Division).

3.1.1 Community Planning. Siting of facilities shall consider the planning goals and objectives of the surrounding community to achieve a harmonious future relationship between the facility and the community. Such planning shall be coordinated in compliance with Executive Order 12372 (reference 3a) as implemented by DoD Directive 4165.61 (reference 3b).

3.2 Site Design. In siting facilities, emphasis shall be placed on operation, function, energy efficiency, safety, security, aesthetics, and preservation of natural site characteristics. Spacing of buildings shall allow for natural light, air circulation and fire safety. Parking, pedestrian access, vehicular traffic, and force protection also require careful consideration.

3.2.1 Topography and Natural Resources. A conscious and active concern for the value of topography and natural resources should be considered in the siting of facilities in accordance with DoD Directive 5500.5 (reference 3c). Natural site features such as ground forms, water, rocks, ledges, trees, and others shall be preserved and utilized in the design to the greatest extent feasible.

3.2.1.1 Multilevel Entrance Related to Grades. Hospital functions usually benefit from placing service activities, i.e. food service, materiel, housekeeping, and stores, on one floor level and patient contact functions such as inpatient admissions, emergency, and outpatient clinics on another floor level. If existing topographic characteristics permit, they may be used to obtain this multilevel configuration, with entrances placed at the appropriate functional level. Elevations for these floors are selected in relation to existing topography to balance cut and fill while providing drainage near the structure.

3.2.1.2 Drainage. Drainage design is a basic site design consideration and is accomplished with the siting and orientation of buildings, location of parking lots and roads, consideration of topography, and compliance with functional site requirements. All site support facilities, i.e. buildings, parking lots, roads and walks, must be graded to ensure positive drainage. Positive drainage for each major site element must be coordinated into a total site drainage system. Existing drainage ways are used to retain the original character of the site and to avoid unnecessary earthwork. Identify existing drainage ways as a part of the First (S1) Design Submittal and use as the basis for designing the drainage plan.

3.2.1.3 Earthwork:

3.2.1.3.1 Site Character. Reduce earthwork by respecting the character of the existing site, its topography and drainage patterns. Observing these criteria will result in site elements fitting comfortably into the terrain. Upon completion, structures should appear as belonging on the site and enhance the site aesthetics. When available and where appropriate, excess fill may be used for earth berms to blend with existing topography and to partially screen service and parking areas from offsite view.

3.2.1.3.2 Cut and Fill. Balance cut and fill for the entire site as closely as possible to eliminate the need for hauling earth on or off the site. If topography in areas for parking, roadways or other site features requires cut or fill, appropriate selection of floor elevations at the major structure provides a useful mechanism for balancing excavation with backfilling for the entire site.

3.2.1.4 Winds. Consider prevailing wind direction when siting health facilities near existing facilities whose functions may degrade air environmental quality. Avoid wind movement from such facilities to the air handling intakes of air-conditioned health facilities.

3.2.1.5 Site Noise. Analyze the project site acoustically to determine existing noise sources and compatibility with the environment required of a health care facility and applicable noise level reduction requirements. Base noise data, including the air installation compatible use zone (AICUZ) report, must be obtained from the installation engineer’s office during concept design.

3.2.1.6 Helipads.

3.2.1.6.1 When required, helicopter landing facilities will be incorporated as a requirement of the health facility site development plans. To preclude loss of time and effort in transporting patients from the helicopter, the location of landing facilities should permit manual transfer of patients to the emergency entrance of the hospital. This distance should normally not exceed 60 meters.

3.2.1.6.2 The site plan will show the helipad with its clear landing area, the approach-departure zones and take-off safety zones. Select the site during early planning to preclude other supporting facilities from encroaching upon a usable helipad site.

3.2.1.6.3 Site orientation of the helipad shall consider wind direction and possible wind currents caused by nearby buildings and structures.

3.2.1.6.4 Criteria for development of helipad facilities and associated air space requirements are contained in TM 5-803-4 (reference 3d) or other applicable criteria supplied by the Design Agent.

3.2.1.6.5 Pavement design criteria are contained in TM 5-823-2 (reference 3e) and TM 5-823-3 (reference 3f) or other applicable criteria supplied by the Design Agent.

3.2.1.6.6 Lighting design criteria are contained in TM 5-811-5

(reference 3g) and NAVFAC MIL-HDBK-1023/1, or other applicable criteria supplied by the Design Agent.

3.2.2 Orientation of Buildings. Views of buildings from key locations on the site shall take advantage of desirable vistas of the surroundings. Such views are especially important for the patient in the bedrooms of nursing towers. Views from roads, walkways and other site vantage points, coupled with effective signage and properly aligned walks, provide an important frame of reference for orientation and direction of visitors, patients, and other personnel.

3.2.3 Appearance. Locate utility meters, poles, transformers, vaults, pressure reducing station piping and valving, and other utility items so that they do not detract from the appearance of the building. The design should also reduce the negative visual impact of utility items and communication lines in accordance with the Joint Service Manual TM 5-803-5, NAVFAC P-960, and AFM 88-43 (reference 3h).

3.2.4 Restrictions. Land use restrictions dealing with runway clearances, helipad planning, aircraft noise, and use of airspace are to applied to the site location with MIL-HDBK-1190 (reference 3i).

3.2.5 Hazards and Nuisances. Hazard and nuisance effects on and off the site, such as excessive noise, odors, smoke, dust, etc., shall be considered during site design. Corrective action shall be planned in advance to diminish any adverse effect of such conditions, including proper orientation, grading, provision of planting screens, fencing, etc.

3.3 Construction in Floodplains or on Wetlands. The construction of facilities in floodplains and wetlands is not recommended but is permitted provided the provisions of MIL-HDBK-1190 (reference 3i), Executive Order 12372 (reference 3a), DoD Directive 4165.61 (reference 3b), Executive Order 11988 (reference 3j), Executive Order 11990 (reference 3k), 43 CFR 6030 (reference 3l), 44 CFR 59-79 (reference 3m), Executive Order 11514 and Executive Order 11991 (reference 3n), P.L. 91-190 (reference 3o), DoD Directive 6050.1 (reference 3p), and Chesapeake Bay Agreement (reference 3q) are all met.

3.4 Planning Procedures for the National Capital Region (NCR). Planning for all facilities in the NCR shall comply with MIL-HDBK-1190 (reference 3i) and OMB Circular A-11 (reference 3r). Master plans for facilities in the NCR shall be sent to the National Capital Planning Commission (NCPC) or the Commission of Fine Arts (CFA), or both, as required by the policies issued by the Commissions. The NCR is defined as the District of Columbia; Prince Georges and Montgomery Counties in Maryland; Arlington, Fairfax, Loudoun and Prince William Counties in Virginia; and all cities and towns within the outer boundaries of the foregoing counties.

3.4.1 Projects normally are not advertised for bids prior to resolution of any serious objections by either Commission. Requests for exceptions are to be submitted to TMA/DMFO together with a statement on the special circumstances involved.

3.4.2 The Military Departments and Defense Agencies are to

establish a day-to-day staff working relationship with the NCPC and the CFA to ensure expeditious handling of the reviews.

3.4.3 The provisions of OMB Circular A-11 (reference 3r) require the annual submission of five-year construction budget proposals to NCPC by the Military Departments and Defense Agencies.

3.5 Energy Conservation. Orient buildings on the site to decrease energy consumption within the constraints of the functional requirements, topography and site configuration. Enhance natural daylighting to the greatest extent possible. Consider the effect of local sun angles and wind conditions when orienting building on the site, along with temperature or humidity characteristics due to landforms or major stands of vegetation. The use of renewable energy resources and the design and siting impacts of recycling policies should also be included in the siting considerations. See Section 7, Energy Conservation.

3.5.1 Winds. In harsh climates and areas of consistently high or changing winds, building entry points must be designed to shelter the entrances from the effects of winds, including snow and dust. Consider prevailing and seasonal wind conditions where locating energy plants, incinerators, trash and trash collection points, and exhaust vents in relation to air intakes to minimize contamination of the site and building.

3.6 Accessibility for the Disabled. All buildings, support facilities and site developments shall be accessible to the disabled in accordance with the guidance provided in Section 12: Accessibility Provisions for the Disabled.

3.7 Security Fencing. Limit the use of fencing to enclose and separate areas within a medical complex to those conditions requiring security or the protection of life, separation of a construction site from operational facilities, isolation of a hazardous area, or as stipulated by the using Military Department. See Section 14, Security and Section 15, Force Protection for additional information.

3.8 Landscape Planting. Provide plant materials (grass, trees, shrubs) and irrigation system(s) as an integral part of the design as appropriate for each type of facility. Use low maintenance plants which are indigenous to the area. Existing mature trees and vegetation should be retained whenever practical. Develop the landscape design to optimize wind protection for the building and especially entry points where feasible. The costs of such planting(s) should be included in the funding of the facility. One source of detailed information is the Joint Service Manual TM 5-803-5, NAVFAC P-960, and AFM 88-43 (reference 3h). Specific guidance on this subject is available from the Design Agent.

3.8.1 Sidewalks. Sidewalks shall be designed to provide convenient and safe pedestrian access and necessary circulation. The width of walks shall be based on pedestrian traffic volume, accessibility requirements, and code requirements. The grade of walks will normally follow the natural pitch of the ground except at locations where physically disabled access is required.

3.9 Soil Conditions. Soil and foundation conditions shall be investigated to assure suitability for economical excavation, site preparation, building foundations, utility lines, grading, and planting. Bearing capacity tests shall be made to assure stable and economical foundations for buildings and other structures. The Design Agents are responsible for supplying or contracting for appropriate information early in the design process.

3.10 Siting of Utilities. Provision of utilities essential to efficient operation and of adequate size to serve future facilities requirements shall be considered in the early planning stages. Early planning is necessary to avoid conflicts in the design and layout of the various utility lines, and the early recognition of the need for additional production and/or supply capacity. All facility projects should specifically address the adequacy of existing utilities support and include any additional needs. Planning of utility lines should minimize utility easements, capital investments, and maintenance and repair costs. Heat distribution and chilled water lines should be located in concrete shallow trench systems. These lines should be separated to minimize heat transfer.

3.10.1 Underground Lines. Locate underground utilities to minimize the cost and effort of performing maintenance. Utility lines of all types should not be located under buildings, parking lots, paved terraces, sidewalks, and other paved areas in accordance with good design practice. If the above criteria cannot be fully satisfied due to existing site conditions, locate utility lines to minimize coverage by site improvements. Locate all underground utility lines, mains, and conduits at the minimum depth required in accordance with local code and frost line and water table requirements. When possible, locate underground utilities in common corridors to allow for ready access and maintenance. Size and locate utilities to allow for future expansion of buildings and/or utility systems.

3.10.2 Storm Drainage. Design the storm drainage system, including gutters, drains, inlets and culverts, to carry the anticipated runoff from the building site, including runoff from melting snow. Design of storm drainage and erosion control will be in accordance with design guidance provided by the Design Agent. Provide inlets where necessary to intercept surface flow. The building up of undeveloped areas may have a noticeable effect on installation drainage facilities. The location and design of new facilities may require major alterations or extensions to existing storm sewers and drainage channels.

3.10.3 Water Service. Provide a water service loop with proper valving to maximize reliability. Critical facilities, as designated by the using Military Department, shall be served by two water lines from separate sources where feasible.

3.10.4 Sanitary Sewer. New building elevations shall be coordinated with the existing sanitary sewer elevation to avoid the need for ejection pumps where feasible.

3.11 Vehicular and Pedestrian Circulation.

3.11.1 Street System. Design of the street system within each

project area shall be coordinated with the overall traffic circulation plans for the installation as well as the adjacent road system. Provide convenient and safe vehicular access and circulation for essential services, such as deliveries, trash and garbage collection, fire protection, and maintenance and repair. Through traffic should be kept to a minimum.

3.11.2 Separate Access. If feasible, provide separate roads from the site entrance to emergency services, patient parking, and support service areas. An additional road may be required from the helipad to emergency services.

3.11.3 Ambulance Traffic. Where possible, ambulances shall be provided a separate, dedicated route to the emergency entrance from the nearest primary arterial roadway.

3.11.4 Dumpsters. Provide visual screening of all dumpster locations from public view. Provide concrete pads for all dumpsters to prevent damage to parking lots and grounds.

3.12 Parking Facilities. Ninety-degree off-street parking is preferred for both organizational and non-organizational vehicles. Parking areas should be coordinated with the location of underground utility services. In the interest of economy and efficiency of land use, joint use parking may be considered where feasible. Where relatively large parking lots are unavoidable, natural terrain features and allocation of natural tree islands should be combined effectively to relieve the unfavorable view. When mature trees or vegetation exist on a site, every reasonable effort should be used to integrate them into the parking areas. Criteria and allowances for parking spaces for non-organizational vehicles shall be in accordance with Table 3-1 (reference 3s).

3.12.1 Parking Structures. Parking structures or garages will be considered when the site is too small to accommodate required parking, the value of the land is excessive, the site is located in a harsh climate, or the required amount of parking spaces creates an oversized area with extreme walking distances. TMA/DMFO will approve parking structures on a case-by-case basis.

3.12.2 Ambulance Shelters. Ambulance shelters in the form of a garage or carport are authorized as part of a facility as follows:

3.12.2.1 Ambulance Garage. A garage may be provided at installations where the heating design temperature on the 97.5 percent dry bulb is less than -12°C (11°F).

3.12.2.2 Ambulance Carport. A carport may be provided at installations where the air conditioning design temperature on the one percent dry bulb exceeds 31°C (87°F).

3.12.2.3 Design Temperatures. All building design temperatures shall be obtained from the Tri-Service Manual, Engineering Weather Data, AFM 88-8, chapter 6; TM 5-785; or NAVFAC P-89 (reference 3t).

TABLE 3-1

AUTHORIZED PARKING SPACES FOR
MEDICAL AND DENTAL TREATMENT FACILITIES

(.75)(X1)+(.40)(X2)+(X3)+(X4)+(X5) – Hospitals

or

(.75)(X1)+(.40)(X2)+(X3)+(X4)+(X5) – Ambulatory Health Care Facilities and Clinics

X1 = All personnel working in the Medical Treatment Facility on a full-time basis, minus the Dental Staff (see X4), plus an allowance for visitors and part-time staff. Include FTE's, contract maintenance, Red Cross volunteers, base exchange, clergy, interns, technical school trainees, Veterans Affairs and other Military Department liaison staff, Reserve, Guard, PME and visitors (i.e. Commander, CHAMPUS, RMO Security, Fire Department consultants, Salespersons, etc.) and shift change overlap. (Use 10 percent if statistics are unavailable for additional visitors, shift overlap, and part-time staff).

X2 = For hospitals, use average daily outpatient workload for "peak month" using 21 workdays per month and 250 workdays per year as a basis for calculation. Workload to be used in calculation is all outpatient visits to clinics plus outpatient O.T., P.T., immunizations, physical exams, inhalation therapy, EEG's, ECG's plus a 10 percent factor for pre-admission testing and paperwork, pharmacy visits (including refills), environmental health, records retrieval, partnership program visits, education programs (birthing, smoking cessation, nutrition), "drop-in" check-ups, school physicals, appointments, DEERS checks, meeting with family members in conjunction with a facility "visit", etc. For ambulatory and outpatient clinics, include average daily outpatient surgical workload for "peak month" using 21 workdays per month and 250 workdays per year as a basis for calculation.

X3 = One space for each patient bed. (Do not include in free-standing Outpatient Medical Treatment Facilities or Dental Facilities which are not co-located with an inpatient facility (Consolidated Medical Treatment Facility (CMTF)).

X4 = Dental Clinic (both free-standing and as a part of another facility (CMFT). Three (3) spaces per dental treatment room.

X5 = One space for each organizational vehicle.

Notes:

1. This formula should be used as a guide. Additional parking spaces need to be justified.

2. Carpooling, "Reserved" spaces for Command, General Officers, Rewards, and Disabled are included in the above factors.

3. Spaces for Disabled as required in Section 12. These spaces are included in and broken out from the above total and designated per Section 12 for both inpatient and outpatient facilities. Spaces for Disabled are to be allocated per Section 12: Provisions for the Disabled, for both inpatient and outpatient requirements as applicable.

4. Calculations may be adjusted for public transportation (if reliable and available within reasonable walking distance) and for Quarters/Housing (if within reasonable walking distance).

5. Parking lot segregation for staff, patients and visitors will be addressed by using Military Departments during design.

REFERENCES

3a. Executive Order 12372, "Intergovernmental Review of Federal Programs", July 14, 1982, 47 Federal Register 30959.

3b. DoD Directive 4165.61, "Intergovernmental Coordination of DoD Federal Development Programs and Activities", August 9, 1983.

3c. DoD Directive 5500.5, "Natural Resources—Conservation and Management", May 24, 1965.

3d. Technical Manual 5-803-7/Air Force Regulation 86-14/NAVFAC P-971, "Airfield and Heliport Planning Criteria", May 12, 1981.

3e. Technical Manual 5-823-4, "Marking of Army Airfield - Heliport Operational and Maintenance Facilities", July 7, 1987.

3f. Technical Manual 5-824-4, "Airfields Other Than Army; Airfield Operational and Maintenance Facilities", June 1, 1966.

3g. Technical Manual 5-811-5, "Army Aviation Lighting", December 13, 1991.

3h. Joint Service Manual, TM 5-803-5, NAVFAC P-960, AFM 88-43, "Installation Design", March 1, 1981.

3i. MIL-HDBK-1190, "Facility Planning and Design Guide", September 1, 1987.

3j. Executive Order 11988, "Floodplains", May 24, 1977.

3k. Executive Order 11990, "Protection of Wetlands", May 24, 1977.

3l. Title 43, Code of Federal Regulations (CFR) 6030, "Floodplain Management Guidelines", February 10, 1978.

3m. Title 44, CFR 59-79, "National Flood Insurance Program"

3n. Executive Order 11514, "Protection and Enhancement of Environmental Quality", March 5, 1970 (as amended by Executive Order 11991, May 24, 1977).

3o. Public Law 91-190, "National Environmental Policy Act of 1969", January 1, 1970.

3p. DoD Directive 6050.1, "Environmental Effects in the United States of DoD Action", July 30, 1979.

3q. "Chesapeake Bay Agreement", December 15, 1987.

3r. OMB Circular A-11, "Preparation and Submission of Budget Estimates", May 27, 1979.

3s. MTMC Report 74-28, "Traffic Generations at Military Medical Facilities", Military Traffic Management Command Transportation Engineering Agency, September 1974.

3t. "Engineering Weather Data", Tri-Service Manual AFM 88-8, Chapter 6; TM 5-785; or NAVFAC P-89.

SECTION 4: ARCHITECTURAL

4.1 General. This section provides architectural design guidance. All facilities should employ an economical, completely functional architectural design. Designs are to be closely governed by standard healthcare, Department of Defense, and Military Department specific functional requirements and criteria specified herein. See Section 12, Accessibility Provisions for the Disabled, for specific guidance on building accessibility.

4.2 External Design. Designs shall be compatible with the context of the site and existing adjacent buildings. Colors, textures and forms of existing buildings or other site features must be considered. Adhere to applicable installation design guidance.

4.2.1 Building Exteriors. Exteriors (elevations) shall conform to or be compatible with the styles of previously constructed permanent facilities of the region or installation, governing Historic Preservation Societies and established design guidance. To ensure compatibility, observe and document during the site visit the physical features of the site and the character and style of any surrounding building(s). Develop elevations based on interior departmental functional relationships and requirements. Where possible, take advantage of existing or developed site assets.

4.2.2 Building Materials. Exterior enclosure shall meet engineering standards with respect to the environment, energy usage, materials and methods of construction. In selecting building materials, give careful consideration to technical criteria and the requirement for high durability and minimal maintenance.

4.2.3 Roof Considerations.

4.2.3.1 Roofing system(s) shall be compatible with structural framing system(s), and provide a complete, readily repairable, waterproof roof. The roofing system shall be durable, require minimal maintenance and provide the fire ratings and classifications required by MIL-HDBK-1008 (reference 4a).

4.2.3.2 Roof slope(s) shall be not less than 21mm/meter (1/4 inch/foot).

4.2.4 Solar Shading. Where air conditioning is not required, adjustable blinds may be one of several design elements used to eliminate direct sunlight glare. In climates where air conditioning is required, solar shading should be accomplished by using any one or combination of the following: solar shading screens or baffles, recessed exterior windows, light-reducing glass, heat-absorbing tinted glass, reflective glass, adjustable blinds. Provide an effective approach to shading of exterior window areas that is life-cycle cost effective, compatible with required comfort levels in working areas and aesthetically compatible with the building design.

4.3 Internal Design. Consider the following factors that affect the quality of a space in terms of their therapeutic effects: changes in daylight, movement of air, changes in temperature, sights and sounds,

human activity and spatial variety with graceful proportion, as well as the selection of materials with compatible textures and colors. See Section 23, Acoustics, for specific guidance on acoustics for architectural spaces and building mechanical systems.

4.3.1 Layouts and Function. Building and departmental floor plan layouts should be simple and functional. Avoid layouts that decrease medical functional efficiencies. Locate permanent plan elements such as mechanical shafts, stairways, and utility rooms to minimize their impact on functional use areas or future expansion of critical areas.

4.3.2 Program for Design. Use the TMA/DMFO-approved Program for Design (PFD) to allocate space assigned to a proposed facility. Modifications must be approved by TMA/DMFO.

4.3.3 Functional Planning and Future Expansion. Relocation of departments having least first-cost is a valuable mechanism for accommodating change. Expansion of expensive existing departments can often be coupled with relocation of lower cost functions. Placing departments on outside walls with adjacent site space available for expansion also adds future flexibility. Open plans, where feasible, allow easy departmental change. Avoid floor plans that encircle a department with permanent corridors, stairs, mechanical rooms, or other building elements difficult to relocate. Reference Section 3, Site Development, paragraph 3.10.

4.3.3.1 Pursue the grouping of functional elements in accordance with the following objectives. Where difficulties arise in the mutual accommodation of all of the following objectives, the objective stated in subparagraph 4.3.3.1.1 below shall be given priority.

4.3.3.1.1 Where appropriate, combine elements on the basis of functional adjacency requirements to facilitate better functional flow and reduced operating and staff costs.

4.3.3.1.2 Combine departments and functions with similar fire code requirements where feasible. For example, the assembly of all outpatient clinical elements which do not serve nonambulatory patients can be constructed to a lower cost as a “business occupancy” rather than the higher cost of a “health care occupancy”.

4.3.3.1.3 Combine elements with similar electrical, mechanical and structural requirements to facilitate savings in construction costs.

4.3.3.2 Place soft-functional areas (areas having minimal amounts of plumbing, special finishes, special mechanical features and special power demands) between hard-functional areas (areas having appreciable amounts of plumbing, special finishes, special mechanical features and special power demands) to permit future growth of the hard-functional areas by relocation of the less costly soft-functional areas.

4.3.3.3 Assure column-free functional areas where possible. Provide vertical column compatibility in multi-story facilities. Review Section 6, Seismic Design, for seismic considerations.

4.3.3.4 Design utility areas for electrical, mechanical, plumbing and other support systems in such a manner as to permit modifications in support of medical functional changes with the least life-cycle-cost and least disruption to the overall operations. Locate utility areas for cost effective connections to site utilities and efficient distribution to functional areas. Stack similar utility areas vertically in multi-floor buildings where feasible for improved distribution. Provide adequate space for required safety clearances and for maintenance and repair. See applicable utility sections for additional information.

4.3.4 Atriums/Clinic Malls. Properly designed atriums and clinic malls improve aesthetic conditions, provide natural light to interior patient rooms and establish an environment providing psychological benefits to patients, staff and visitors. The incorporation of an atrium into the design of a multi-story facility has the potential for reducing initial capital investment, construction costs, and associated energy costs. See Section 13, Fire Protection, of this document for fire and life safety design requirements.

4.4 Circulation.

4.4.1 Separation of Traffic. In a multi-story medical facility, elevators are a principal axis of personnel, patient and materiel movement. To reduce the mixing of supplies, visitors, staff and patients, access to and location of different types of elevators should be considered. The objectives of separation are to decrease cross contamination, minimize disturbance of patients, and organize traffic patterns. Reference Section 17, Transportation and Materials Handling.

4.4.2 Circulation Patterns.

4.4.2.1 Provide adequate circulation space at points of traffic congestion. Provide architectural features that emphasize overall circulation patterns and major entrances to departments.

4.4.2.2 Make circulation more efficient by avoiding confusing hallway systems, the extension of through corridors from department to department, dead end departmental corridors, and a horseshoe shape in major corridor systems that require excessive walking distances.

4.4.2.3 Minimize the use of single-loaded corridors.

4.4.2.4 Locate vertical transportation element(s) to be immediately visible and accessible from the major entrances.

4.4.2.5 Main circulation corridors in health care occupancies should be at least 2400mm (8 feet) wide, exclusive of lobbies and elevator vestibules, unless otherwise directed. Minimum corridor widths must comply with NFPA 101 (reference 4b) requirements. Generally, minimum corridor widths shall be 1700mm (5 feet 6 inches) and 2400mm (8 feet), depending on loading and code requirements.

4.5 Floor-to-Floor Heights. Determination of finished-floor to finished-floor heights is a multi-disciplinary task. Special attention must be given to mechanical requirements and clearances. Adequate space shall be provided above finished ceilings for the coordination and

placement of such building systems as mechanical, electrical and communications distribution systems, unique structural considerations and utility piping systems. Elements requiring special ceiling heights should be grouped on the least number of floors consistent with proper functional design. See Appendix A and Section 19, Integrated Building Systems.

4.5.1 Underfloor or Crawl Spaces. Limit crawl spaces or underfloor areas to less than 2130mm (7 feet) in height. Reference Section 2, Design Procedures, Submittals and Documentation, Figure 2-5.

4.6 Exterior Wall Design.

4.6.1 Materials and Assemblies. Select materials that are durable, require low maintenance and are compatible with applicable criteria including Military Handbook 1008.

4.6.2 Joint Locations. Evaluate the design characteristics of walls as they relate to construction and control joint locations, considering impact on sterile areas, construction sequence, and building movement due to expansion and contraction.

4.6.3 Climate Factors. Climate data establishes performance requirements for thermal design of exterior walls. Use overall composite heat transfer or “U” factors in conjunction with local climatological data. Composite “U” factors must conform to criteria in Section 7, Energy and Water Conscious Design, and Section 8, Heating, Ventilation and Air Conditioning (HVAC).

4.6.4 Thermal Resistance. Obtain the thermal characteristics of single materials or wall assemblies from the American Society of Heating, Refrigeration and Air-conditioning Engineers (ASHRAE) Handbook of Fundamentals (reference 4c) or from manufacturer’s certified technical information. Identify thermal resistance (R) values for each element in the building shell. Prepare “U” factor calculations following recommended procedures as documented in the ASHRAE Handbook of Fundamentals (reference 4c). Use thermal transmission values prescribed in Section 7, Energy and Water Conscious Design, Table 7-1.

4.7 Fenestration and Windows.

4.7.1 General. Design fenestration in accordance with National Fire Protection Association (NFPA) codes, HVAC requirements, and installation or command aesthetic appearance criteria. MIL-HDBK-1190 (reference 4d) contains provisions for natural light and ventilation and prescribes minimum glass areas to achieve those provisions in certain facilities, but establishes maximums only for locations designed for less than –18 °C (0 °F) winter design temperature. Design must provide for window cleaning and maintenance.

4.7.2 Required Locations. Exterior windows must be provided in normal nursing care, Intensive Care and Cardiac Care bedrooms, Prosthodontic Dental Treatment Rooms (non-tinted), and Prosthodontic-Ceramics Laboratories (non-tinted). Natural lighting may be provided in Dermatology Clinics, if required by the using Military Department.

4.7.3 Patient Bedroom Windows. Provide windows in patient sleeping rooms in accordance with NFPA 101 (reference 4b). Hardened or protected facilities may require a waiver to this requirement.

4.7.4 Glazing for Impact Safety. Comply with the requirements of ANSI Z97.1 (reference 4e), NFPA 80 (reference 4f) and NFPA 101 (reference 4b). Sill heights less than 760mm (30 in) above the finished floor must have an intermediate horizontal mullion, or suitable alternative, included in the fenestration at that height.

4.8 Interior Construction.

4.8.1 Component Evaluations. Select interior components and their related construction details based on initial cost, life expectancy, housekeeping and maintenance costs, and aseptic characteristics, as applicable. Normally used materials, including their correlation and standard abbreviations, are indicated in Appendix A.

4.8.2 Aseptic Environments. Selection of interior construction and finishes must consider the need for aseptic environments. Use smooth, nonporous, seamless materials, recessed cabinets with radiused inside corners to minimize contamination and reduce housekeeping requirements. Smooth, seamless wall and floor coverings facilitate cleaning. As a minimum, the following areas shall be designed for ease of housekeeping with elimination of materials or surfaces which could harbor contamination, and to minimize maintenance requirements:

a) Oral Surgery Rooms, Dental Treatment Rooms

b) Special Procedure Rooms – Cardiac Catherization, Angiography, Endoscopy, etc.

c) Operating and Delivery Rooms

d) Emergency and Trauma Rooms

e) Decontamination Rooms in Surgery, Delivery, and Central Processing and Distribution (CPD)

f) Sterile Storage Rooms (Surgery, Delivery, CPD)

g) Substerile and Recovery Rooms (Surgery and Delivery)

h) All Patient Treatment Rooms

i) Intravenous Admixture and Chemotherapy Preparation Rooms in Pharmacy.

4.9 Floors.

4.9.1 Design floors to accommodate different types of wheeled conveyances and to be devoid of abrupt changes in elevation. Maintain constant floor elevation throughout for safety and ease of movement of wheeled equipment. Avoid raised thresholds, steps and ramps. Recess all expansion joint cover plates flush with the finished floor. Provide floor depressions to accommodate cart washers, floor loading sterilizers,

radiographic electrical floor duct, walk-in prefabricated units, i.e. walk-in refrigerators and freezers, controlled temperature rooms, sound suites; RFI shielded rooms, computer rooms, high density shelving and other embedded equipment. Rooms receiving ceramic tile or quarry tile finishes which slope to a floor drain(s) or require a setting bed for installation shall be designed with floor depressions to accommodate tiles and setting beds.

4.9.2 Floor Finishes.

4.9.2.1 Floor finishes shall be as indicated in Appendix A.

4.9.2.2 Limit the specification of carpeting to those areas indicated in Appendix A.

4.10 Wall and Partition Systems. Limit partition systems to masonry or steel stud with gypsum wallboard systems. Construct partition systems with noncombustible materials and design them to conform to applicable portions of the National Fire Codes. Select systems which permit modification with the minimum cost and difficulty within acoustical and fire criteria, except in areas subject to severe impact. Reference Appendix A.

4.10.1 Use of Full Height Partitions. Full height partitions, floor to structural slab above, shall be used in the following rooms, spaces, and compartments for sound attenuation and for physical security purposes:

a) Medical Record Storage areas (paper file areas or large centralized areas)

b) Materiel Services Storage areas

c) Central Processing and Distribution Storage areas

d) Pharmacy

e) Prosthodontics and Ceramic Laboratory

f) Medical Equipment Maintenance and Repair

g) Orthotic Appliance Manufacturing

h) Facility Engineer Maintenance Shops

i) Pulmonary Function and Laboratory

j) Medical Service Account (MSA) Funds Storage

4.10.2 Clinic office and examination rooms where patient-provider privacy is essential. Perform a cost comparison between the first cost of full height partitions and associated work versus other methods of sound attenuation to determine feasibility for this circumstance. See Section 23, Acoustics, for additional information.

4.10.3 Barriers. Design protective barrier partitions to protect occupants or equipment in rooms, spaces and compartments from fire, smoke, radiation exposure, electrical interference, MRI shielding, or for physical security purposes; reference Appendix C for specific radiation shielding criteria. Reinforced masonry or concrete partitions are strongly desirable around areas where the physical security of valuables or drugs is required; reference Section 14, Physical Security.

4.10.4 Protection. Use bumper guards on walls in areas subject to frequent abrasion and impact, such as corridors, utility rooms, central processing and distribution (CPD), gurney storage and others. Bumper guards shall comply with the requirements in Section 12, Accessibility Provisions for the Disabled, if they are used as handrails in corridors and accessible pathways. Consider the use of bumper guards above the floor base at reception counters, nurses stations and dispensing windows that are designed for accessibility by wheelchair-bound patients. Mechanically mount bumper guards to appropriate wall blocking where steel stud partitions are used and extend outward from the wall to afford the needed protection. Provide corner guards at outside corners of walls, corridors, and in areas and rooms subject to damage by mobile equipment. Design corner guards to extend from the floor to the finished ceiling. Masonry partitions also require corner guards. Do not use bullnose masonry corner units.

4.10.5 Reinforcement. Wall partitions require additional reinforcing for positive attachment of surface-mounted items such as casework, wall bumpers, toilet accessories, and other equipment.

4.11 Ceilings. Select a ceiling system based on initial cost, surface visual appeal, resistance to moisture, fire resistance rating, lighting, HVAC outlets, security, maintenance, and acoustical requirements. Reference Appendix A.

4.11.1 Support. Use of suspended ceiling surfaces for the direct support of intravenous infusion tracks, cubicle curtain tracks, and ceiling lights is not acceptable. Ceiling-mounted accessories shall be secured through the ceiling to secondary support members. Use universal suspension systems in all radiographic rooms —- reference Section 16, Medical and Dental Equipment, and Appendix C (Universal X-Ray Room).

4.11.2 Utility Access. Provide maximum accessibility in corridor ceilings to the mechanical and electrical distribution systems. Do not use concealed-spline ceiling systems requiring special tools to lower tile assemblies. Color-code the access panels into ceiling plenums with tabs to identify the type of utility present. Reference Section 19, Integrated Building Systems.

4.11.3 Moisture Protection. When acoustic treatment is required in the presence of high levels of moisture, use plastic-faced acoustic tiles.

4.11.4 Ceiling Heights. Maximum ceiling heights shall be as indicated in Appendix A.

4.12 Interior Finishes.

4.12.1 Objective. The prime objective of interior design services is to create an environment that evokes a desired attitude and orientation in patients in order to promote the delivery, and more importantly, the acceptance of health care. The patient should perceive action patterns and images advocating a “return to normal life function”. The interior designer should avoid a strictly “institutional” effect in all patient contact areas, including offices routinely visited by patients. One source of guidance on interior design is contained in DG 1110-3-122, “Design Guide for Interiors” (reference 4g).

4.12.2 Requirements. Interior finishes for all rooms and areas are specified in Appendix A. The A-E shall, upon request by the using Military Department in coordination with the Design Agent, provide all services and information necessary for a complete, integrated interior design package for the entire facility. The package should include, but not be limited to the following: interior design and coordination related to selection and layout of furniture and furnishings; selection of color and material finish; and design of graphics having a visual impact on interior design. The package should contain documentation for procurement of furniture and furnishings by the government, including a bill of materials, furniture and equipment placement plans, specifications and cost estimates. It will also include wall and floor coverings and furniture that are part of the facility design. Healthcare facility design should include the planning and specification of an integrated modular medical support system that provides integrated components that are interchangeable between administrative, clinical, healthcare materiel management and handling, pharmacy, laboratory, and nurse stations. This integrated system should address applicable infection control requirements, chemical resistant criteria, and any seismic condition requirements for the project. Organizational equipment such as typewriters, personal computers and peripheral devices, and normal furniture replacement items will not be funded as part of the construction project.

4.12.3 Interior Materials. All items used for interior furnishings must conform to applicable codes and standards. All interior fabric finish materials shall be selected from major fabric sources and must be fire retardant or chemically treated for fire resistance. Draperies and other window treatments shall be coordinated with heating, air conditioning and exterior wall profiles to avoid interference with designed airflow.

4.13 Vestibules and Doors.

4.13.1 Exterior Vestibules. Vestibules should be provided at exterior entrances. Vestibules shall comply with UFAS and ADAAG requirements and be of sufficient depth to allow the outside doors to close before the inside doors are opened. A minimum of 3.65M (12’-0”) is recommended for any major entrance to avoid “wind tunnel” effects.

4.13.2 Revolving Doors. Revolving doors may be provided when justified and all code requirements are met. When revolving doors are provided, the NFPA 101 (reference 4b) and accessibility requirements to have normal swinging doors for emergency egress are still required.

4.13.3 Automatic Doors. Electrically operated or hydraulically operated automatic doors should be provided for Emergency Trauma entrances of Medical Treatment Facilities and other selected Medical Treatment Facility entrances based on facility size and mission. When functionally appropriate, automatic doors should be considered for interior use on facilities.

4.13.4 Doors, Frames and Hardware. Door sizes are as indicated in Appendix A. Unless otherwise required, all doorframes shall be hollow metal. Door hardware shall be of the highest quality, provide durability in a high use occupancy, meet ADAAG/UFAS requirements, and be aesthetically compatible with the design of the facility. A source of guidance on appropriate hardware selections and schedules is contained in reference 4h.

4.14 Color Selections.

4.14.1 Color selections shall comply with applicable design guides and installation criteria.

4.14.2 Coordinate color selection with the quality and quantity of light provided in each space. Color schemes proposed to change existing interiors must not exceed the capability of the existing lighting system to illuminate the selected colors to required brightness levels.

4.14.3 Select all non-proprietary paint colors from a nationally recognized paint manufacturer. Coordinate the colors with the basic architectural finish schedule.

4.14.4 Select colors with regard to their effect on the maintainability and function of the space. Special consideration must be given to worktops in laboratory areas and maintenance shops where staining from various solutions is a problem.

4.14.5 Select colors and patterns with regard to their impact on the health and welfare of the patient and staff. Color selections should be made from a limited pallet to coordinate with all finishes and accessories.

4.14.6 Provide lighter colors with improved light reflectivity characteristics, where feasible, for improved functional lighting levels. Provide matte surface finishes where glare due to high gloss finish could decrease functional visibility.

4.15 Signage. See Section 21, Wayfinding and Signage.

4.16 Acoustics. See Section 23, Acoustics.

4.17 Sustainable Design. Sustainable design is the design, construction, operation and reuse/removal of the built environment (infrastructure and buildings) in an environmentally and energy efficient manner. All medical facilities shall incorporate sustainable design features to the greatest extent possible, maintaining the functional and operational requirements of the facility. Specific guidance on sustainable design shall be obtained from the Design Agent.

4.18 Provisions for Mental Health Facilities. Not included.

4.19 Provisions for Hypobaric and Hyperbaric Facilities. Not included.

REFERENCES

4a. MIL-HDBK-1008, “Fire Protection for Facilities Engineering Design and Construction.” (latest edition)

4b. NFPA 101, “Life Safety Code”, National Fire Protection Association, latest edition.

4c. American Society of Heating, Refrigeration and Air Conditioning Engineers (ASHRAE), “Handbook of Fundamentals”, latest edition.

4d. MIL-HDBK-1190, “Facility Planning and Design Guide”.

4e. ANSI Z97.1, “Glazing Materials Used in Buildings, Safety Performance Specifications and Methods of Test”, American National Standards Institute.

4f. NFPA 80, “Standard for Fire Doors and Fire Windows”, National Fire Protection Association, latest edition.

4g. DG 1110-3-122, “Design Guide for Interiors”, U.S. Army Corps of Engineers, September 1997.

4h. Door and Hardware Institute, “Hardware for Health Care Facilities”, June 1993.

Section 5:STRUCTURAL DESIGN

5.1 General. This Section provides criteria for the selection, analysis, and design of structural system(s) and materials to be used for military health care facilities. Additional criteria relating to seismic design is provided in Section 6, Seismic Design, of this Military Handbook.

5.2 Design Criteria. Structural design for military health care facilities shall be in accordance with references A through F. Structural material design considerations shall be in accordance with references G through L.

5.3 Design Loadings. Unless otherwise indicated herein, the minimum design loadings for military health care facilities shall be in accordance with ASCE 7-95 (reference AA).

5.3.1 Floor live loads shall be as given in Appendix A. Roof live loads, other than snow loads which are addressed below, shall be in accordance with ASCE 7-95 (reference AA). The live load factors to be used in load combinations must include dead, wind, seismic, etc.

5.3.2 Wind Loads. Determine basic wind speeds from the tables in TI 809-01 (reference A), unless a site-specific study of local records indicates a higher value should be used. The tables are based on a wind speed with a recurrence interval of 50-years, an Exposure C condition (open terrain with scattered obstructions having heights generally less than 30 feet), and a 3-second gust 33-feet above the ground. Using these basic wind speeds, use ASCE 7-95 (reference AA) procedures to determine the design wind pressure loading. Design basic wind speeds will normally be based on "Exposure C" conditions; exceptions are allowed where it can be clearly established that lesser loads associated with "Exposure B" conditions (towns, city outskirts, wooded areas and rolling terrain), or where greater loads associated with a coastal waterfront site, are applicable. Give appropriate consideration to unusual channeling, lifting, or gusting effects from promontory mountain, hill, or valley exposures. Do not use "Exposure A" conditions for permanent military health facilities.

5.3.3 Snow Loads. Determine ground snow loads from the tables in TI 809-01 (reference A), unless a site-specific study of local records indicates a higher value should be used. If a building location is not in the referenced tables, the ground snow load map in ASCE 7-95 (reference AA) may be used. Use ASCE 7-95 procedures to determine the design roof snow loads, including drifting, sliding, etc.

5.3.4 Seismic Loads. Requirements for seismic design are contained at Section 6 of this Military Handbook.

5.3.5 Load Combinations. The basic design loadings shall be considered to act in union in the strength design combinations given in ASCE 7-95 (reference AA). Use the combination or combinations of loadings that produce the greatest overall loading and the most unfavorable effects on the building or its structural components as the basis of design.

5.3.6 Frost Penetration. Determine the minimum design depth of building foundation below finished grade using the tables and procedures in TI 809-01 (reference A).

5.4 Site Conditions & Soils Investigations. Soil Investigation Program. Conduct soil investigations in accordance with TM 5-818-1 (reference R). If arctic or sub-arctic construction conditions are present at the site, the program will address the provisions for building foundations contained in TM 5-852-1 (reference S) and TM 5-852-4 (reference T), respectively.

5.4.1 Seismic Geologic Site Hazards. Seismic geologic site hazards include surface fault rupture, soil liquefaction, soil differential compaction (or settlement), landsliding, and flooding. Use TI 809-04 (reference D) to define requirements for seismic hazard screening.

5.4.2 Site-Specific Seismic Ground Motion Study. Use TI 809-04 (reference D) to determine when a site-specific seismic ground motion study is required, and the required scope of the study. Retain a qualified geotechnical seismic ground motion specialist to conduct these site-specific studies. Complete the study during the early preliminary stage of the soil investigation program so the results will be available during the structural system selection process.

5.5 Additional Design Considerations. Several aspects of structural design typically associated with medical facilities are addressed below. It is essential that structural design considerations enter into the earliest stages of concept planning and design, to assure compatibility with medical function, and the building architectural and equipment features.

5.5.1 Open Area Concept. Provide column-free functional areas as appropriate. Long-span structural construction usually increases functional area openness and flexibility. Although exceptionally long spans or special long span structural techniques are generally more costly (in terms of first cost), designers should give consideration to the life cycle cost benefits provided by the additional flexibility.

5.5.2 Acoustical Design Considerations. Noise attenuation is an important consideration in the structural design of health care facilities. Structural elements can be both transmitters and attenuators of sound, and therefore must be considered into the acoustical design of each project. Refer to Section 23 of this Military Handbook for additional information.

5.5.3 Vibration. The vibration response of the structure requires special consideration. Vibration factors qualify the geometry of the building and affect its lateral load resistance. Designs must consider the vibration potentials of floor and roof framing and floor systems, and the overall structure, to assure adequate isolation and damping of vibrations produced by HVAC equipment, emergency generators, elevator equipment, and other machinery and equipment. In addition to assuring a living environment free from distracting or annoying vibrations, designers must be aware of the requirements of vibration sensitive equipment, such as analytic scales, optical equipment, electronic equipment and X-ray machines.

5.6 Seismic Design Considerations. Building configuration plays an important role in the performance of the structure when subjected to seismic ground motion. For this reason, seismic considerations may require limits on the height and configuration of some structural system types. Optimal seismic resistance and performance is obtained with a symmetrically configured structural framing system. A system with a symmetric and uniformly distributed placement of frames, shear walls, braced frames and wall openings will be more effective and efficient in resisting lateral forces and, more importantly, in reducing horizontal torsional moments. For these reasons,

building structural systems with irregular shapes (L, U, T, E, H, or cross), setbacks, or other unusual features will be avoided. If these building layout shapes must be used, the structural system will be divided by expansion (seismic) joints into regular rectangular (plan view) shapes.

5.7 Structural System Type.

5.7.1 Ductile moment-resisting space framing systems are adequate, but the large floor-to-floor heights and long spans necessary in some modern health facilities may make adequate drift control difficult and expensive.

5.7.2 Pure shear wall box systems provide excellent seismic resistance but are generally restrictive and inflexible from a planning point of view.

5.7.3 Braced frames, both concentric and eccentric, provide good strength and drift control characteristics. They are more restrictive from a future planning perspective than moment frames, however, since the frames can be strategically placed to lessen the restrictions, they can be significantly less restrictive than shear wall box systems.

5.7.4 Dual bracing systems, combining complete moment-resisting frame system with shear walls, or braced frames have good drift control characteristics. Space frames offer stiffness and tie the building together. Individual space frame members must resist at least 25 percent of the required lateral load. Shear walls or braced frames must resist 100 percent of the lateral load. Resistant frames must resist forces based on their relative stiffness and must satisfy deformation compatibility requirements.

5.8 Seismic Structural System Considerations.

5.8.1 General. All health care facility buildings must have a complete lateral force resisting structural system that provides a continuous and direct load path with members and connections that possess the strength and ductility to transmit seismic forces to the foundation. This structural system shall be capable of withstanding design earthquake ground motions while, (1) remaining within prescribed limits of strength, (2) maintaining deformation limits, and (3) providing adequate energy dissipation capacity.

5.8.2 Innovative Systems. Both base isolation and passive energy dissipation are considered to be innovative seismic force resistant structural systems. Innovative systems shall be considered for major health care facilities in high seismic risk areas, where the design spectral response acceleration at short periods (S_{DS}) is equal to or greater than 0.50. The specific types of base isolation systems that are considered for use in health care facilities must have been researched, tested and proven to be acceptable, based on sound engineering principles and experience. Base isolation materials must be durable, i.e., have minor aging and temperature effects and have reliable, long term performance characteristics Selection considerations shall include a life-cycle cost comparison between a conventional, fixed base system and the base isolation system. If a base isolation system is proposed, it must be submitted to HQUSACE, CEMP-E for approval along with data supporting and justifying the selection.

5.8.2.1 The designs of innovative systems are often specific to the device, which may be a proprietary item. The entire design, including the choice of device and the detailing of the entire structural system, shall be completed by the building designer. The completion of the design of the structural system shall be extended to the construction contractor by the use

of a performance specification. If the design becomes proprietary, this shall be immediately reported to the Design Agent's Project manager. Also, the types of tests needed to evaluate the specified performance of these devices are often specific to the type of device. The A-E shall include in design documents the requirements for performance tests that are appropriate for the actual device(s) provided for by the design.

5.8.2.2 Certain nonstructural systems, services, and will be required for the post-earthquake life-safety or operational performance levels of the health care facility, as addressed at Section 6 of this Military Handbook. The structural design of the restraints and anchorages of these important nonstructural elements is an integral part of the structural design of the facility.

STRUCTURAL MILITARY DESIGN CRITERIA AND GUIDANCE

Reference	Military Criteria Document	Document Title
A	TI 809-01	Load Assumptions For Buildings
B	TI 809-02	Structural Design Criteria for Buildings
C	TI 809-03	Structural Design Criteria For Structures Other Than Buildings
D	TI 809-04	Seismic Design For Buildings
E	TI 809-05	Seismic Evaluation and Rehabilitation For Buildings
F	TI 809-06	Masonry Structural Design For Buildings
G	TI 809-07	Design Of Load-bearing Cold-Formed Steel Systems
H	TI 809-26	Welding- Design Procedures And Inspections
I	TI 809-27	Concrete Floor Slabs On Grades Subjected To Heavy Loads
J	TI 809-28	Design And Construction Of Reinforced Ribbed Mat Slabs
K	TI 809-29	Structural Considerations For Metal Roofing
L	TI 809-30	Metal Building Systems
M	TI 809-51	Seismic Screening And Evaluation Procedures For Existing Military Buildings
N	TI 809-52	Commentary On Snow Loads
O	TI 809-53	Selection Considerations For Roofing Systems
P	TM 5-818-1	Soils and Geology Procedures for Foundation Design of Buildings and Other Structures (Except Hydraulic Structures)
Q	TM 5-852-1	Arctic and Sub-arctic Construction General Provisions
R	TM 5-852-4	Arctic and Sub-arctic Construction: Foundations for Structures

STRUCTURAL NON-MILITARY DESIGN CRITERIA AND GUIDANCE

Reference	Non-Military Criteria Document	Document Title
AA	ASCE 7-95	Minimum Design Loads for Buildings and Other Structures
BB	FEMA 302	NEHRP Recommended Provisions for Seismic Regulations for New Buildings and Other Structures, February 1998
CC	FEMA 273	NEHRP Guidelines for the Seismic Rehabilitation of Buildings, October 1997

STRUCTURAL MATERIALS APPLICABLE CRITERIA

Reference	Materials	Codes or Specifications
BA	Aluminum	The Aluminum Association (AA), “Specifications for Aluminum Structures”
BB	Concrete	American Concrete Institute (ACI), “Building Code Requirements for Structural Concrete”
BC	Masonry	ACI, Building Code Requirements for Masonry Structures
BD	Prestressed Concrete	Prestressed Concrete Institute (PCI), Manuals
BE	Steel	
BF	Steel Joists	Steel Joists Institute (SJI), “Standard Specifications and Load Tables, Open Web Steel Joists and Longspan Steel Joists,” and similar publications covering deep longspan steel joists.
BG	Steel, Light Gage	American Iron and Steel Institute (AISI), “Specifications for the Design of Cold-Formed Steel Structural Members”
		Steel Deck Institute, Design Manual and Diaphragm Design Manual
BH	Welding	American Welding Society (AWS) Codes, Standards and Specifications
BI	Wood	American Society of Civil Engineers (ASCE), “Standard for Load Resistance Factor Design (LRFD) for Engineered Wood Construction”, ASCE-16

Section 6:SEISMIC DESIGN

6.1 Introduction. This Section provides criteria for permanent military health care facilities. Base seismic design requirements upon the level of operation, or seismic performance objective, as defined in TI 809-04, required for a particular health care facility following an earthquake. Seismic performance levels vary from life safety (intended to reduce the likelihood of injury and loss of life) to a complete post-earthquake operational capability (defined as immediate occupancy in TI 809-04). The required level of seismic performance for a facility will be as directed by the Contracting Officer, determined in coordination with the Design Agent and the Using Military Department Representative for a specific project.

6.2 Health Care And Design Requirements. The designation of seismic performance objective for a particular health care facility will depend upon the seismic use group, the seismic performance level, and the level of design ground motion as defined in TI 809-04. Certain health care facilities may require only key areas to be operational after an earthquake. Other health facilities may require only a life safety level of performance. Design requirements may include the preservation of essential utility systems such as ventilation, electricity, water supply, waste systems, steam distribution, medical gases, vacuum, medical air, and communications. Design utility systems to permit isolation of damage by shutoff of damaged areas and operation of systems at a reduced capacity.

6.3 Seismic Performance Levels. The Using Military Department will determine based upon criticality of facility function the performance level required for a medical facility. The following levels of seismic performance are defined with respect to operational mission, disaster preparedness and medical post-earthquake needs:

6.3.1 Life Safety Level. This level, which generally applies to existing health care facilities, is the minimum requirement of seismic upgrade or alteration projects. The essential requirement is to reduce the likelihood of injury or death to personnel by providing a structure with a margin of safety against collapse. Existing health facility structural systems will be evaluated according to the requirements in TI 809-05 as given in Section 5, Structural Design. This evaluation will also include both geologic site hazards and the anchorage and lateral support of mechanical, electrical, architectural and other non-structural elements whose damage will threaten the life safety of occupants or might block safe means of egress. When an existing Structural Design system does not meet these requirements, the system will be strengthened according to the requirements in TI 809-05 as given in Section 5, Structural Design. With this level of design, the health care facility requires post-earthquake evacuation, with post-earthquake medical operations dependant upon outside assistance. No specific time is specified for re-occupancy and utilization for this class of structure.

6.3.2 Partial. The partial operational level, which is equivalent to a safe egress Structural Design performance level as defined in TI 809-04, may apply to either new or existing facilities. These requirements will generally apply to new facilities to be located in areas where the design spectral response acceleration at short periods (S_{DS}) is less than 0.167 and for existing facilities where the design spectral response acceleration at short periods (S_{DS}) is greater than 0.167 but less than 0.33. In this category, critical spaces, laboratories, radiology, CMS, supply storage, and Nuclear Medicine must be designed to continue in operation following a design earthquake. In those areas, fixed equipment, vertical transportation, and

utilities shall be anchored/braced to resist the seismic forces, and if damaged, be restorable within several days. Facilities with this design level will continue operation with outside assistance for inpatients and disaster victims with temporary expansion of emergency facilities.

6.3.3 Selected/Full. This level of design, which is equivalent to an immediate occupancy Structural Design performance level as defined in TI 809-04, provides a higher level of seismic resistance capability than the "Partial" level. This level of seismic performance will generally apply to new facilities located in areas where the design spectral response acceleration at short periods (S_{DS}) is greater than 0.167 but less than 0.50. Health facilities with a full level of seismic performance will be designed to be prepared for post-earthquake operations and capable of restoration of minor damage within several hours following the maximum design seismic ground motion. All utilities and equipment must be prepared for isolation and/or restoration with minimum work when damage occurs. Provision for temporary emergency connection or augmentation of potable water, sanitary sewers and fuel will be required. In existing facilities where upgrade of all portions of the facility is economically impractical, upgrade may be restricted to the more critical spaces and systems identified in the program authority document.

6.3.4 Complete. The complete level of seismic resistance, which is equivalent to an immediate occupancy Structural Design performance level as defined TI 809-04, is the maximum level of seismic design for military health care facilities. This complete level of seismic performance applies to facilities located in areas with a high seismic risk, i.e., areas where the design spectral response acceleration at short periods (S_{DS}) is greater than 0.50. At this level, the facility will be designed for complete continuity of operation, for medical care of inpatients and for receiving earthquake casualties. Additionally, provisions for emergency supply and capability to operate a hospital immediately after a disastrous earthquake for at least a 4-day period will be made, i.e., water supply, electrical generation, fuel storage, and sanitary facilities. All site utilities and systems which are dependent upon outside sources during normal operations must be completely restorable within a 4-day period. Isolation and damage control will be provided to completely restore the facility to a near normal interior environment within several hours.

6.4 General Design Considerations. Seismic design for a health care facility requires consideration of the site geologic site hazards and ground motions, building configuration, Structural Design systems, spatial allocation, design of glazing, exterior facings, functional space utilization, mechanical systems, electrical systems, communication systems, interior partitions, finishes, and furnishings. Base design for seismic conditions on the seismic use group, the level of seismic ground motion at the site, and seismic performance level, all as defined in TI 809-04. See Section 5, Structural Design for other seismic considerations related to building layout and performance.

6.5 Post-Earthquake Emergency Status. The disaster magnitude and the estimated duration of the post-earthquake emergency period must be reviewed and their impact on the operations of the facility assessed. The extent of curtailment, relocation, and expansion of services; the demands placed on on-site storage of potable water, fuel, sewage, and medical supplies; and the best design solutions to achieve and preserve functionality will be determined from these estimates.

6.6 Concept Design Development. Seismic design will be functional and responsive to the normal operation of the facility. Because each seismically designed facility is unique, specific project criteria for various facility and health systems will be developed during concept design development. The type of Structural Design framing to be used must be coordinated in the early concept development of the functional layout so that an effective, structurally efficient seismic resistance/performance type "system" is considered. Specific project criteria will include mechanical, electrical, medical gases and communication systems design criteria. See Section 5, Structural Design, for the functional and other operational items that must be considered during the development of the building layout and concept design and for the criteria that must be used in the seismic design of the facility.

6.7 New Health Facilities.

6.7.1 Site Planning. Seismic requirements affect site planning to a certain degree. The special studies of site conditions and soil investigations related to geologic hazard identification and site-specific ground motion determinations, are given in Section 5, Structural Design, of this Military Handbook.

6.7.2 Structural Design Planning. The seismic issues related to the selection and development of Structural Design seismic force resisting systems, including the consideration of innovative systems (base isolation and passive energy dissipation systems), of a health care facility building are given in Section 5, Structural Design, of this Military Handbook.

6.7.3 Seismic Design Concept Report. The Designer will prepare and submit this report as required in Section 5, Structural Design. The Seismic Design Concept Report will summarize the seismic design provisions incorporated in the Final Concept Submittal. The objective is to make sure that these provisions meet the designated seismic performance level required to operate the facility. The report must include, but will not be limited to, the following requirements.

a. Seismic design assumptions employed, fire protection, daily water requirements, electrical requirements, mechanical requirements, sanitary facilities, and site access.

b. The location and relationship of departments and essential services under normal and post-earthquake operating conditions.

c. Explanation of how functions are curtailed, relocated, or expanded.

d. Location of major fixed and movable equipment.

e. Description of the Structural Design system selected for resisting lateral force, discussion of reasons for its selection and explanation of how the system will transfer seismic loads to the earth.

f. A list of actions taken to accommodate the major seismic considerations.

g. The geotechnical report document, which will contain the assessment of the geologic site hazards and, when directed, the seismic site-specific ground motion characteristics at the site. This report must include, but not be limited to evaluation of regional geology, seismology, local

geology and soil conditions; past historical earthquake data; and statistical methods used for calculation in determining the design seismic ground motion.

6.8 Evaluation of Existing Health Facilities. Determination of the economical feasibility of seismic upgrade requires that the facility be systematically evaluated, functional priorities established, and rehabilitation measures and costs estimated before a decision is made regarding the post-earthquake role to which the facility should be upgraded. The approach to evaluating a facility will vary depending on several factors: the level of seismic activity expected, age of the facility, type of construction, and the number and configuration of buildings. Upgrade of all portions of an existing facility and all of its systems to current seismic criteria is usually not feasible or practical. Typically economic feasibility limits upgrade to life safety performance levels.

6.8.1 Seismic Hazard Evaluation Considerations. The following elements should be considered in the overall evaluation.

6.8.1.1 Site Hazards Assessment. An assessment of geologic hazards at the site will be done as indicated in Section 5, Structural Design.

6.8.1.2 Structural Design System Evaluation. The seismic hazard evaluation of an existing health care facility buildings Structural Design system, including when an evaluation must be done and the criteria that will control the evaluation, are given in Section 5, Structural Design.

6.8.1.3 Architectural Considerations. Buildings with irregular layouts and configurations (such as U, L, T, E, H, or cross-shaped buildings) or buildings with major setbacks are difficult to strengthen and potentially hazardous and may be cost prohibitive. Overhangs, unbraced parapet walls, gables, balconies, terra-cotta roof tile, and rigidly mounted glazing are hazardous and endanger life safety. The following interior features must also be evaluated:

a. Ceiling systems, in particular lay-in acoustical ceilings, are extremely vulnerable to earthquake motions and forces.

b. Partitions and walls in relatively flexible buildings must be checked, because provisions usually have not been made to prevent interaction between the frames and partitions.

c. Egress doors, which are normally closed, tend to be immobilized by binding the door frame during an earthquake. Their construction details must be carefully reviewed to determine whether their operation will be impaired.

d. Light fixtures and methods of suspension must be checked, because pendant fixtures and fixtures recessed in lay-in acoustical ceilings are particularly vulnerable.

e. Stairwells which are the only method of communication between floors and vertical egress within the facility following an earthquake must be checked. Structural Design adequacy of exterior stair tower structures attached to the main structure to prevent separation during seismic shock must also be checked.

6.8.1.4 Fire Protection Considerations. Evaluate the site water supply system, including its vulnerability to earthquake damage, points of on-site

and public water supply, on-site water storage capacity, sizes and quality of on-site fire mains, fire pumps sizes, capacities, and pressures, and types of supply to buildings. Evaluate the fire protection system, noting extent and quality of sprinkler systems, dry standpipes, wet standpipes, and portable extinguishers.

6.8.1.5 Hazardous Materials. Evaluate bulk oxygen storage, fuel storage facilities and the natural gas supply for earthquake vulnerability and damage. Evaluate the methods of bracing or anchoring medical and/or flammable gas cylinders and the methods of storing laboratory reagents, radioactive isotopes, and other dangerous chemicals.

6.8.1.6 Electrical Power. Electrical power will be assumed to be unavailable from public utilities following an earthquake. Determine the availability, capability and capacity of the alternate power source (on-site generator(s)) to provide the necessary power to operate the facility following an earthquake. Make particular notes of all pertinent characteristics of the alternate power source, with emphasis on capacity, mounting arrangement, starter reliability, fuel supply, age, and degree of automation. Also note the general vulnerability to earthquake-induced damage of the transfer switches, electrical distribution system, and items to be serviced by the alternate source power system.

6.8.1.7 Mechanical Systems & Equipment. Inspect the boiler plant to determine the type of construction, type of boilers, anchorage of boilers, bracing of critical piping, and the location, type, and mounting of critical auxiliaries. Evaluate the domestic cold water systems for bracing of main lines, storage tanks, and distribution points. Inspect all mechanical rooms and critical equipment (such as heating, ventilating and air conditioning equipment) for methods of anchorage, mounting, and bracing. Check required connections to other equipment elements.

6.8.1.8 Site Accessibility. Evaluate public access to the facility. Provide at least two separate on-site entrance roads to the facility, each preferably connecting to a different off-site public access road. Identify potential earthquake hazards to roads, bridges, overpasses, and retaining walls. Inspect the site to determine if a safe and reliable on-site space for emergency helicopter landings is within close proximity of the hospital buildings.

6.8.1.9 Facility Upgrade Report. Include all of the above considerations, along with the Structural Design system evaluation and the site hazards assessments, in a facility upgrade report (SEE SECTION 2)

6.8.2 Final Evaluation. Based on the review and approval of the seismic facility upgrade report, a final evaluation of the facility will determine the most satisfactory method to upgrade the seismic resistance to the prescribed criteria. Proposed solutions will be thoroughly analyzed and cost estimates prepared. As an alternate concept, a base isolation system may be considered to upgrade the seismic resistance of facility. Base isolation will limit the seismic forces transmitted to the super structure and minimize the seismic upgrade provisions for the non-structural elements. If considered, the base isolation requirements for new medical facilities apply.

6.9 Design of Essential Non-structural systems. The seismic restraint, protection, site-storage, and other seismic design features and requirements addressed by the following criteria will be applicable according to the level of the seismic threat and the designated operational level of the facility.

6.9.1 Identification of Essential Systems. Table 6-1 identifies essential non-structural systems and lists them in order of priority based on previous post-earthquake experience and input from professional health care personnel.

6.9.2 Life Safety Systems.

6.9.2.1 Fire Sprinkler Piping. Brace sprinkler system piping in accordance with details provided in NFPA 13.

6.9.2.3 Portable Fire Extinguishers. Provide mounting brackets for hung and free standing portable fire extinguishers, designed to preclude inadvertent release of the extinguisher due to vertical or horizontal earthquake motions.

6.9.2.4 Standpipes. Brace wet and dry standpipes.

6.9.2.5 Fire Pumps. Protect pumps to avoid damage by falling debris.

6.9.2.6 Stairways. Design stairways to resist required lateral loads and insure tolerance to maximum predicted structural design deformations.

6.9.2.7 Exit Doors. Design exit door frames so they will not deform and jam as a result of seismic forces.

6.9.2.8 Exitways. Plan exits and exit pathways to avoid blockage with debris from ceilings, brittle wall finishes, and glass following a seismic disturbance.

6.9.3 Hazardous Materials

6.9.3.1 Special Storage Provisions. Provide special storage equipment or accessories that are convenient for normal daily use, and functional after earthquakes. Examples of such equipment are lower profile shelves with face bars which restrain material on shelves and secure shelves to the wall or floor; specially designed racks for restraining reserve oxygen and nitrous oxide tanks; and special bins for storing anesthetic gas containers.

6.9.3.2 Fuel Gas Piping. Brace piping and provide shutoff valves. Use malleable fittings and valves, provide swing joints where necessary.

6.9.4 Electrical Systems.

6.9.4.1 General. The Essential Electrical System will follow the requirements outlined in Section 10, Electrical, of this Military Handbook.

6.9.4.2 Vibration Isolation. Where vibration isolation is not required, bolt generators directly to an appropriate foundation. Where vibration isolation is necessary, provide restraining clips at vibration isolators to prevent failure of the isolation mountings under earthquake vibration conditions.

6.9.4.3 Generators. Where practicable, use generators with integral radiator cooling systems. Where auxiliary cooling systems are necessary, install cooling towers or remote radiators at grade level. Brace cooling towers or radiators and provide special bracing for piping.

6.9.4.4 Fuel Storage Tanks. Underground Fuel Storage Tanks are required. Install expansion flex loops in fuel lines which are on the soil side of a foundation. Anchor all fuel day tanks, using malleable fittings and valves, with flexible connections to the generator.

6.9.4.5 Battery Racks. Anchor and brace battery racks.

6.9.4.6 Miscellaneous Electrical Equipment. Anchor or restrain switchgear, substations, automatic transfer switches, distribution panels, and motor control centers. Give special attention to providing adequate support for bus ducts.

6.9.4.7 Building Expansion (Seismic) Joints. Carefully design all crossings of seismic or expansion joints by power lines. Flexibility of cable and conduit at potential points of differential movement will be provided, as will separate grounds for conduit runs crossing seismic joints.

6.9.5 Conveyance Systems. Design elevators and shafts to meet the prescribed lateral force requirements. Evaluate elevator manufacturers' recommendations for meeting these criteria. In general, it will be necessary to install additional rail support brackets, counterweight retaining brackets, rail safety shoes and emergency stop gear; and to brace spreader beams and elevator control cabinets.

6.9.6 Mechanical Systems. Mechanical equipment, including distribution piping and ductwork, shall be braced, anchored, or otherwise protected in accord with the criteria for the designated seismic performance level of the facility. Designers are required to coordinate the bracing of piping systems subject to thermal expansion with the seismic restraint system, to assure both systems function as intended.

6.9.6.1 On-Site Sanitary and Water Storage Facilities. For any facility with a designated seismic protection level in excess of “Life Safety”, the following criteria shall apply.

a. Provide the water service with two independent connections to the water system. In addition, provide a water storage facility as a source of supply, sized to adequately meet fire and water demands during the post-earthquake emergency period. Design water mains to minimize service disruption from earthquakes and to facilitate post-earthquake repair. Domestic water storage considerations may factor in a reasonably reduced level of water consumption for the emergency period of operation.

b. Provide an Emergency Sanitary Sewage Holding Facility for temporary retention of all sanitary sewage discharge from the hospital during the post-earthquake emergency period.

6.9.6.2 Fuel Gas Shutoff Valve. Equip the site gas supply line with a safety shutoff valve.

6.9.7 Medical Systems and Equipment.

6.9.7.1 Autoclaves. Anchor steam sterilizers.

6.9.7.2 X-Ray Equipment. Include bracing as required for the design of X-ray unit ceiling tracks. Anchor X-ray control consoles and automatic film developers.

6.9.7.3 Miscellaneous Equipment Considerations

a. Secure equipment or shelving not required to be moved from location to location to a partition. Equipment with doors should have a positive latching device that operates automatically when access to the equipment or shelving is not continuously required.

b. Blood bank, drug storage, critical refrigerators, freestanding incubators and centrifuges, should be secured.

c. Secure sequential multiple blood analyzers and other fragile laboratory equipment. Anchor related shelving, and provide lips and face bars as necessary.

d. Wheeled Equipment. Wheeled equipment should have wheel locks and should be assigned a specific location when not in use. Wheeled equipment should be provided with closets or alcoves, whenever possible, to limit rolling. Portable equipment should be stored in recessed cabinets which are secured to partitions, whenever possible.

6.9.7.4 Supply Storage. Supply cabinets should have either plastic or tempered glass in sliding doors, and the doors should slide closed automatically. Open shelving should have a shelf rim which precludes supplies being shaken from their storage position.

6.9.7.5 Medical Gas Bottles. Metal boxes attached to the floor and equipped with double chains should be provided for medical gas bottles. Wheeled carts carrying oxygen or other medical gases should be equipped with wheel locks and chains for fastening to walls.

6.9.8 Architectural Systems.

6.9.8.1 Lighting Fixtures. Provide independent hangers at diagonal corners of lighting fixtures installed in suspended ceilings. Avoid use of pendant fixtures; if used, they will be of earthquake-resistant design. Use positive locking devices to install surface-mounted and recessed fixtures.

6.9.8.2 Ceilings. Avoid the use of large areas of lay-in type acoustic ceilings. Such ceiling construction is not inherently earthquake-resistant and will become progressively less earthquake-resistant due to failure to replace hold-down clips during maintenance procedures. Avoid the use of these ceilings in egress and triage areas. Where such ceilings are used, use lateral bracing and runners tied with wires rather than clips. Do not attach the ceiling to the surrounding walls.

6.9.8.3 Computer Room Floors. If computer room floors are used, they will be adequately braced to resist seismic motion.

6.9.8.4 Partitions. Provide appropriate backing plates, blocking, studs, blocking and bracing for partitions which support cabinetry, storage racks, shelves, bins, and lockers. In a relatively flexible building, limit partition damage due to interaction with the frame by anchoring each partition to a single Structural Design member and allowing movement at the other edges.

6.9.8.5 Facing Materials. Brittle facing materials such as ceramic tile or glazed masonry suffers extensive damage during earthquakes and will be used only when necessary to meet medical functional requirements.

6.9.8.6 Windows. Consider story drift when detailing window frames and exterior wall panels.

6.9.8.7 Overhangs. Do not use unbraced overhangs, parapets, and balconies.

TABLE 6-1

ESSENTIAL NONSTRUCTURAL SYSTEMS

1. Fire Protection System
Sprinkler System
Risers
Distribution mains
Valves
Support hangers, bracing, and clamps
Extinguishers
Receptacles
Mounting brackets
Standpipes
Mains
Exits
Stairways
Doors
Corridors
2. Hazardous Materials
Hazardous Systems
Natural gas,O2, N2O
Risers
Distribution mains
Hangers
Hazardous Storage
Radioactive storage
O_2 Cylinders/Storage tanks

TABLE 6-1
(continued)

ESSENTIAL NONSTRUCTURAL SYSTEMS

N_2O Cylinders
Chemicals, reagents
Anesthetic gases
Fuel
3. Alternate Source Power System
Transfer switches
Diesel-Generator
Fuel piping
Cooling System
Cooling tower
Pumps
Piping
Batteries
Controls
Switchgear
Substation
Distribution Panels
Motor Control Centers
4. Communications Systems
5. Transport Systems
6. Mechanical Systems
HVAC Systems
OR and DR
ICU and recovery
Nursery
Ductwork
Air handling units

TABLE 6-1
(continued)

ESSENTIAL NONSTRUCTURAL SYSTEMS

7. Medical Systems
Fixed
Autoclaves
X-ray
Film developers
Sequential multiple analyzer
Casework and exhaust hoods
Portable
Freestanding or wheels
Dialysis units
Appliances
Laboratory/medical equipment
Medical monitoring equipment
Beds, food service units, stretchers, carts
Medical Stores and Supplies
Medications and Drugs
Chemicals
Instruments
Linens
General supplies
Medical Records
8. Architectural Systems
Lighting Fixtures
OR, DR, emergency
Partitions, Ceilings and Walls
Ornamentation
Office Equipment

TABLE 6-1
(continued)

ESSENTIAL NONSTRUCTURAL SYSTEMS

Operation Blocking Hazards
Emergency lighting/batteries
Surgical
Personnel hazards
Glazing and Fenestration
Storage Racks, Bins, Lockers
Egress corridors
Maintenance/Repair Stores and Supplies
Maintenance/repair parts
Housekeeping supplies
Emergency tools
9. Special Equipment
Proximity to Critical Equipment
Expensive Equipment
Non-Emergency Power
Sewer
Kitchen Equipment
Laundry Equipment

SECTION 7: ENERGY AND WATER CONSCIOUS DESIGN

7.1 General. This section provides instructions for the incorporation of energy and water conservation into medical facility designs. Subject to medical functional requirements and project funding limitations, conservation features shall be incorporated when demonstrably cost effective in accordance with this section. This section is applicable to new facilities, and to those portions of existing buildings undergoing upgrade or alteration. This criteria is in accordance with the following directives: Title 10 CFR, Subpart A, Part 435, "Energy Conservation Voluntary Performance Standards for New Commercial and Multi-Family High Rise Residential Buildings, Mandatory for Federal Buildings (reference 7a), the Federal Energy Management Improvement Act of 1988 (reference 7b), The Energy Policy Act of 1992 (reference 7c), and Executive Order 12902 (reference 7d).

7.1.1 Alteration/Addition Projects. For alteration or addition projects, these criteria shall not be applied to portions of the building or systems not affected by the work. It would not be expected, for example, that in an addition project, wherein the existing facility's chilled water network is extended to provide cooling for the addition, the project need consider energy upgrade to the overall chilled water system.

7.2 Policy.

7.2.1 Medical Function. Energy and water conservation features shall not restrict or interfere with medical functional requirements, cause a reduction in or dependability of required services, or result in inability to achieve environmental conditions required by this manual.

7.2.2 Proven Technologies. The technologies utilized in the design shall be proven in similar applications in the industry, and must be readily available and competitively procurable.

7.2.3 Utility Incentive Programs. Military Departments are authorized to participate in utility incentive programs (references 7c, 7d, and 7e). These programs are typically associated with load management, involving efficiency maximization and demand control. Medical facility designers shall investigate the availability and applicability of any such programs offered by the serving utilities, for consideration of their incorporation into the design.

7.2.4 Energy and Water Conservation Program. The Office of the Deputy Under Secretary of Defense for Environmental Security (DUSD-ES) is responsible for administering the Federal Energy Management Program (FEMP) and the Energy Conservation Investment Program (ECIP). These programs are designed to improve the energy efficiency of new or existing DOD facilities within MILCON project guidelines. The DUSD-ES will give the highest funding priority to projects and programs that provide the greatest cost-effective energy or water use reduction and savings-to-investment ratios. Military Departments should develop valid ECIP or FEMP projects in accordance with reference 7f with an accompanying DD Form 1391 justifying the proposed project and submit to OASD-HA DMFO for inclusion into their submission to DUSD-ES.

7.2.5 Economic Study. Designs shall consider all potential energy conserving features, equipment, systems or strategies as may be applicable to

the particular project. Those which are considered to have the greatest potential for cost effective application, based upon the experience and professional judgement of the designer and Design Agent, shall be the subject of more detailed economic analysis. These analyses shall be utilized in the selection of project systems and equipment. More detailed discussion of system economic analysis requirements is contained elsewhere in this section.

7.2.6 Metering. Utility services, including electricity, gas, steam, heating water, and chilled water, shall be metered. The meter shall have the capability of digital communications with a central post-wide (or hospital campus) Monitoring and Control System.

7.3 Design Considerations.

7.3.1 Passive Solar Energy. The use of passive solar energy conservation techniques shall be considered. Earth sheltering and berming shall be used if cost effective and if in keeping with overall site and architectural considerations. Building orientation and shading shall be arranged, when practicable, to minimize solar cooling load and maximize winter daylighting.

7.3.2 Interior Design Conditions. The required interior design conditions are listed in Appendix A of this manual. For those applications or requirements not specifically addressed in Appendix A, consult ASHRAE publications or equivalent sources.

7.3.3 Equipment Operating Efficiencies. The minimum operating efficiencies for energy consuming equipment shall be in accordance with the 10 CFR 435 (reference 7a) and the applicable military departmental guide specifications. Incorporate the highest equipment efficiencies determined to be competitively available and life-cycle cost effective for the individual project.

7.3.4 Thermal Transmission Values. The maximum thermal transmission values utilized in the design shall be in accordance with Table 7-1. The insulation values may be altered when determined to be cost effective, utilizing life-cycle cost analysis, for the given climatic conditions and building operational characteristics.

7.3.5 Energy Source Selection. The energy source for the heating and cooling systems, service water heating, and process loads shall be selected in accordance with the requirements set forth in the Defense Energy Program Policy Memorandum titled "Defense Facilities Energy Selection" (DEPPM 88-1) (reference 7g). In essence, this criteria requires that the energy source shall be the most life-cycle cost effective, determined by analysis of the available and reliable alternatives. The use of nonconventional or alternative energy sources is encouraged if proven reliable and demonstrably cost effective. Energy or fuel supply contracts with third party financing are also encouraged and shall be considered prior to authorizing a new heating or power plant. Refer to DEPPM 88-2 (reference 7h) titled "Private-Sector Financed Defense Energy Contracts" for privately financed Defense energy contract guidelines.

7.3.5.1 Total Energy System. Total energy systems shall be considered for major facilities as directed by the Design Agent.

7.3.5.2 Renewable Energy Systems. Designers shall consider the economic practicability of renewable energy systems, such as solar, wind, and geothermal energy, for each project. When recent economic studies for similar facilities in the project's climatic region demonstrate that such systems are not life-cycle cost effective, those studies may be cited in lieu of conducting new analyses.

7.3.6 Utility Costs. The utility cost data shall be ascertained from the Installation's contracting office, or other approved source as directed by the Design Agent. Utility cost escalation rates utilized in economic studies shall be in accordance with Energy Price Indices and Discount Rates for Life-Cycle Cost Analysis (reference 7i).

7.3.7 Equipment and Utility Monitoring and Control System. In hospitals, and other MTF's as required by the Using Service and coordinated with the Design Agent, a central monitoring and control system located within the facility shall be incorporated into the design to provide central monitoring, reporting, and control parameter adjustment capability. Connection to an existing Utility Monitoring and Control System (UMCS) or Energy Monitoring and Control System (EMCS) shall be as required by the Using Service and coordinated with the Design Agent.

7.4 Facility Energy Performance. Each facility shall be designed so that its Design Energy Usage (DEU) does not exceed the Design Energy Target (DET) established in accordance with this section. The DET is an energy-use performance target for the facility, which excludes energy required to provide for medical functions, i.e. process loads, as defined further below. It is not the intent to prioritize compliance with the DET over considerations of life-cycle cost in the design and selection of building elements, equipment and features. The DET compliance is a tool to help assure that designs incorporate all practicable and cost-effective energy saving opportunities.

7.4.1 Design Energy Target (DET). The DET's are established at Table 7-2 on the basis of facility type and climactic region. As indicated in the notes to Table 7-2, the DET's are based on defined operating schedules. For the purpose of comparing project DEU, facility energy consumption must be modeled on the same operating schedule. Further guidance for computer modeling is provided below.

7.4.2.1 Design Energy Usage (DEU). The DEU is a calculation of the estimated energy consumption of a project facility, and is not to exceed the DET. The DEU shall be calculated by the designer during the concept design, and shall be updated as necessary thereafter based upon Design Agent requirements. The DEU shall include all the energy required for conditioning and ventilation systems (heating, cooling, and humidification) energy, lighting, and domestic hot water generation required to provide for occupant comfort and amenities. The DEU shall not include process loads, such as energy used in laboratories, central material, food service, or ancillary support operations. Similarly, energy required to compensate for the cooling or heating loads associated with those operations shall not be included. Service distribution system losses are included in the DEU if supplied from a plant dedicated to the project facility. The area used to determine the DEU shall be the gross area measured from the outside of the exterior walls.

7.4.2.2 Total Design Energy Usage (TDEU). The TDEU is an estimate of the future energy consumption required to condition and operate the facility,

serving to enable Users to predict the future energy demands and costs for a particular facility. When required by the individual military department, TDEU shall be calculated during concept design. The calculation shall include all facility energy demands, including process loads, and shall be modeled on the actual schedule of operation intended for the facility.

7.5 Design Analysis. Medical facility design projects require analysis of building heating and cooling loads, annual energy consumption, and life-cycle cost economics, to serve as the basis of equipment and systems selections. Subject to compliance with medical functional requirements and project funding limitations, selection of energy consuming systems and design features shall be based on Life-Cycle Cost Analysis (LCCA) of the relative energy, maintenance, and initial costs.

7.5.1 Energy/Load Analysis. Energy and load analyses for all new facilities, additions, and major alterations larger than 280 gross square meters (3000 gross square feet) shall be conducted with the use of a computer program utilizing a calculation method recognized in the ASHRAE Fundamentals Handbook. The computer program is to be acceptable to the Design Agent, and utilize an hour-by-hour calculation procedure. For projects less than 280 gross square meters (3000 gross square feet) analysis may be by an accepted computer program or by manual calculations in accordance with the Fundamentals Handbook.

7.5.2 Life-Cycle Cost Analysis (LCCA). LCCA shall be executed in accordance with the procedures specified in the National Institute of Standards and Testing (NIST) Life-Cycle Cost Handbook (reference 7j), and supplemental military departmental criteria as appropriate. The present worth discount rate, and future fuel escalation rates, used in the LCCA shall be those published in reference 7i. Unlike the energy analysis, LCCA's shall be based on actual operating hours, and shall realistically reflect first purchase, installation, operations, maintenance, and replacement costs that occur within the study period. Designers are cautioned that although most energy/load programs are available with life-cycle cost programs, many of these are not in accordance with the NIST Handbook, or may not utilize the correct discount factor. Consult with the Design Agent to identify acceptable programs.

TABLE 7-1

MAXIMUM THERMAL TRANSMISSION VALUES FOR
DoD MEDICAL AND DENTAL TREATMENT FACILITIES

WATT/m^2-^oC (BTU/hr-ft^2-^oF)

HEATING (1) DEGREE DAYS ^oC (^oF)	GROSS WALL(2) U_O	OPAQUE WALLS(3) U_W	CEILING/ ROOF(4) U_R	FLOOR SPACE(5) U_{F5}	FLOOR GRADE(6) U_{FG}
Less than 560 (Less than 1000)	2.15 (0.38)	0.853 (0.15)	0.284 (0.05)	0.568 (0.10)	1.647 (0.29)
561-1110 (1000-2000)	2.15 (0.38)	0.853 (0.15)	0.284 (0.05)	0.454 (0.08)	1.363 (0.24)
1111-1670 (2001-3000)	2.048 (0.36)	0.568 (0.10)	0.227 (0.04)	0.397 (0.07)	1.192 (0.21)
1671-2220 (3001-4000)	2.048 (0.36)	0.568 (0.10)	0.170 (0.03)	0.397 (0.07)	1.022 (0.18)
2221-3330 (4001-6000)	1.760 (0.31)	0.454 (0.08)	0.170 (0.03)	0.284 (0.05)	0.794 (0.14)
3331-4440 (6001-8000)	1.590 (0.28)	0.397 (0.07)	0.170 (0.03)	0.284 (0.05)	0.683 (0.12)
Over 4441 (Over 8000)	1.590 (0.28)	0.397 (0.07)	0.170 (0.03)	0.284 (0.05)	0.568 (0.10)

TABLE 7-1 NOTES

(1) Degree-Day value from the joint service Manual TM 5-785, NAVFAC P-89 and AFM 88-29 Engineering Weather Data shall be used.

(2) Gross wall (U_O) values include all doors and windows, window frames, metal ties through walls, structural steel members that protrude through all insulation to the exterior, or adjacent to the exterior, and continuous concrete or masonry walls or floors that extend from inside heated spaces through the building envelope to the exterior, e.g., fire walls that extend above the roof and concrete floor slabs that extend beyond the exterior walls to form a balcony or terrace. Maximum U_O value will put a limitation on the allowable percentage of glass to gross wall area in a building. It should be noted that in hospital, medical, and dental facilities, which are positively pressurized, the 10 percent limitation on glass to gross wall area for walls facing a prevailing winter wind might not be appropriate. Insulating glass on the building will allow a higher percentage of glass in comparison to single pane glass. The U-value of each wall component shall be factored by the percent of the total area it covers.

TABLE 7-1 NOTES CONTINUED:

(3) Wall (U_W) value is the thermal transmittance of all elements of the opaque wall area. U_W values shall be used for upgrade of existing facilities where the alteration of the wall cavity and resizing of window glazing to meet gross wall values (U_O) are not cost effective. There may be situations where upgrading all the perimeter walls in low, medium, and high internal loaded spaces to the specified transmission value may not be life-cycle cost effective. The designer will recommend appropriate alternatives when such situations occur, providing supporting life-cycle cost data based on appropriate hour-by-hour computer simulations. This requirement to assess the above-mentioned situation may necessitate a variation from the values set forth in this table.

(4) Ceiling/roof (U_R) values are for ceiling/roof areas where adequate space exists for insulation to be applied above ceiling and/or below roof structure. Built-up roof assemblies and ceiling assemblies in which the finish interior surface is essentially the underside of the roof deck will have a maximum U_r value of 0.284 (0.05) for any Heating Degree-Day area.

(5) Floor, space (U_{FS}) values are for floors of heated space over unheated areas such as garages, crawl space, and basements without a positive heat supply to maintain a minimum of 10 ^{o}C (50 ^{o}F).

(6) Floor, grade (U_{FG}) values are for slab-on-grade insulation around the perimeter of the foundation.

TABLE 7-2

DESIGN ENERGY TARGETS (DET) FOR DoD MEDICAL AND DENTAL (1) TREATMENT FACILITIES - $MJ/m^2/yr$ ($1000\ BTU/ft^2/yr$))

BUILDING CATEGORY CODE	REGION 1	REGION 2	REGION 3	REGION 4	REGION 5	REGION 6	REGION 7
(2) CDD (3):	< 1110 <(2000)	< 1110 <(2000)	< 1110 <(2000)	< 1110 <(2000)	< 1110 <(2000)	> 1110 >(2000)	> 1110 >(2000)
HDD (3):	> 3885 >(7000)	3055-3885 (5500-7000)	2220-3055 (4000-5500)	1110-2220 (2000-4000)	0-1110 (0-2000)	0-1110 (0-2000)	2000-1110 (2000-4000)
510 Hospital Buildings (4)	1530 (135)	1530 (135)	1190 (105)	1140 (100)	1140 (100)	11909 (105)	1250 (110)
530 Laboratories (5)	510 (45)	510 (45)	400 (35)	400 (35)	400 (35)	400 (35)	400 (35)
540 Dental Clinics (5)	740 (65)	740 (65)	620 (55)	570 (50)	450 (40)	510 (45)	680 (60)
550 Dispensaries (5)	740 (65)	740 (65)	570 (50)	510 (45)	400 (35)	450 (40)	620 (55)

TABLE 7-2 NOTES:

(1) Energy consumed within 1.5 m (5 ft) line, based on Dept. of Energy building categories and weather zones. The DET for a building within which more than one category is found shall be the sum of the area-factored DET's for the given categories. A minimum 10% of the total area shall be dedicated to the given category to be factored into the DET.

(2) Degree-Day value from the joint service Manual TM 5-785, NAVFAC P-89 and AFM 88-29 Engineering Weather Data shall be used.

(3) Cooling Degree Days - CDD; Heating Degree Days - HDD

(4) 24 hours/day, 7 days/week.

(5) 10 hours/day, 5 days/week.

TABLE 7-3

ENERGY CONVERSION FACTORS (1)

FUEL TYPE	CONVERSION FACTORS
ANTHRACITE COAL	33 MJ/kg (28.4 MILLION BTU/SHORT TON)
BITUMINOUS COAL	28.6 MJ/kg (24.6 MILLION BTU/SHORT TON)
#2 DISTILLATE FUEL OIL	38.7 MJ/L (138,700 BTU/GALLON)
RESIDUAL FUEL OIL	41.7 MJ/L (149,700 BTU/GALLON)
KEROSENE	37.6 MJ/L (135,000 BTU/GALLON)
LP GAS	26.6 MJ/L (95,500 BTU/GALLLON)
NATURAL GAS	38.4 kJ/L (1,031 BTU/ft^3)
STEAM	2.3 MJ/kg (1000 BTU/LB)
ELECTRICITY (2)	3.6 MJ/kWh (3,413 BTU/kWh)
HEATING HOT WATER, CHILLED WATER	HEAT CONTENT OF FLUID ENTERING THE FACILITY

TABLE 7-3 NOTES:

(1) If a given energy source consistently differs from these conversion factors by greater than 10%, then use the actual unit BTU content value instead of the conversion factor shown.

(2) Electricity is not typically used for space heating. In the exceptional case where it is cost effective and greater than 10% of the annual space heating is derived directly from electric resistive heating, the energy consumed shall be multiplied by 2.2 to account for conversion losses.

REFERENCES

7a. 10 CFR, Part 435, "Energy Conservation Voluntary Performance Standards for New Buildings; Mandatory for Federal Buildings", Subpart A - Voluntary Performance Standards for New Commercial and Multi-Family High Rise Buildings; Mandatory for Federal Buildings", Revised.

7b. Public Law 100-615, "Federal Energy Management Improvement Act", November 5, 1988.

7c. Public Law 102-486, "Energy Policy Act", October 24, 1992.

7d. Executive Order 12902, "Energy Efficiency and Water Conservation at Federal Facilities", March 8, 1994.

7e. Defense Energy Program Policy Memorandum, "Participation in Public Utility Sponsored Energy Conservation and Demand Side Management (EC/DSM) Programs", DEPPM 94-1.

7f. Memorandum OASD(L/MRM), Subject: Energy Conservation Investment Program Guidance, March 17, 1993

7g. Defense Energy Program Policy Memorandum, "Defense Facilities Energy Selection", DEPPM 88-1, October 14, 1988.

7h. Defense Energy Program Policy Memorandum, "Private-Sector Financed Defense Energy Contracts", DEPPM 88-2, September 30, 1988.

7i. National Institute of Standards and Technology (NIST), “Energy Price Indices and Discount Rates for Life-Cycle Cost Analysis”, NISTR 85-3273 (updated every fiscal year).

7j. National Institute of Standards and Technology (NIST) HDBK 135 (Rev), "Life-Cycle Cost Manuals for Federal Energy Management Programs".

SECTION 8: HEATING, VENTILATION AND AIR CONDITIONING (HVAC)

8.1 General. This section provides HVAC design requirements for DoD medical, dental, medical training, and medical research facilities. The primary requirement of the HVAC system(s) in a medical facility is the support of medical function and the assurance of occupant health, comfort, and safety. The HVAC system functions not only to maintain minimum requirements of comfort and ventilation, but is an essential tool for the control of infection, removal of noxious odors, dilution and expelling of contaminants, and establishment of special environmental conditions conducive to medical procedures and patient healing. Subject to the above, appropriate consideration shall be given to the HVAC design to ensure system maintainability, economics and energy efficiency, and adaptability to future facility modification or expansion.

8.1.1 Applicability. This criteria applies to new and existing medical facilities including hospitals, medical and dental clinics, veterinary clinics, medical supply warehouses, medical training facilities, and medical research laboratories. Applicability to existing facilities is restricted to upgrade or replacement projects, and for those specific systems or services included in the scope of the project authorization. For existing facilities, when complete compliance with the technical criteria of this section is not economically practicable, consideration shall be given to substitution of other recognized industry standards or criteria upon application to the Healthcare Facilities Steering Committee or TMA/DMFO as provided under Section 02 of this document. All facilities shall comply with the applicable standards of the National Fire Protection Association (NFPA).

8.1.2 Supporting Documents. This guidance may be supplemented by the individual military departmental publications, including Architect-Engineer Instructions (AEIs), Technical Manuals (TMs), Engineering Technical Letters (ETLs), project-specific design instructions, and other criteria. Minimum HVAC design criteria shall be in accordance with the latest editions of the American Society of Heating, Refrigerating, and Air Conditioning Engineers (ASHRAE) publications (reference 8a), the American Council of Government Hygienists (ACGIH) Publication "Manual of Recommended Practices for Industrial Ventilation" (reference 8b), and the National Fire Protection Association (NFPA) Standards (references 8c, 8d, 8e, 8f, 8g, and 8h), as well as applicable governmental regulations. Other industry and government standards shall be utilized for HVAC design as referenced herein.

8.2 Design Conditions.

8.2.1 Weather Data. Weather data shall be obtained from the most recent edition of the Joint Services Manual TM 5-785, NAVFAC P-89, AFM 88-29, "Engineering Weather Data" (reference 8i). If given military installations have access to more recent or accurate information of weather conditions in their region, designers shall coordinate use of this information with the service design agent.

8.2.2 Interior Design Conditions. Interior design conditions shall be in accordance with Appendix A.

8.2.3 Space Ventilation. Minimum total and outside air change rates shall be as indicated at Appendix A; Computed on a per-occupant basis, minimum outside air ventilation shall meet the worst-case requirements of either appendix A, or ASHRAE Standard 62-89. Higher air change rates may be required to meet air conditioning or makeup air requirements as supported by engineering calculations. See 8.16 of this Section for additional guidance and requirements.

8.2.4 Ambient Design Dry and Wet Bulb. The HVAC cooling design for medical facilities shall generally be based on the 2.5 percent dry bulb (DB) temperature and the corresponding 2.5 percent mean coincident wet bulb (MCWB) temperature, and heating design upon the 97.5% DB, as provided in reference 8i. Exceptions include Critical Care and Sensitive spaces, where special environmental requirements demand more precise temperature or humidity control, or both, at all times (see below). In addition, designs for facilities in humid climates should examine BIN weather data for the locale to determine if the 2.5% MCWB temperature is reasonable for that project; Use of a higher design wet bulb temperature may be warranted for facilities utilizing large quantities of outside air, or cooling towers, where the 2.5% MCWB temperature is exceeded for a significant number of occupied hours during the cooling season.

8.2.5 Critical Care Spaces. Critical Care Spaces are identified in Section 10, Electrical, of this Military Handbook. HVAC cooling design for critical hospital areas shall be based on the 1 percent dry bulb temperature with corresponding 1 percent MCWB temperature. The heating design shall be based upon the 99% winter dry bulb temperature.

8.2.6 Sensitive Spaces. Sensitive areas include Automated Data Processing (Computer) rooms, Radiology and MRI computer rooms, selected laboratories (see below), and Telephone Switch Room. Other rooms housing sensitive electronic or other equipment or processes may be designated as Sensitive Areas on an individual project basis. Design ambient temperatures shall generally be the 1% DB/1% MCWB (summer), and 99% DB (winter). Each application should consider using 2.5% DB/2.5% MCWB (summer), and 97.5% DB (winter) design conditions for less critical equipment/process air conditioning requirements.

8.2.6.1 Laboratories. Space design temperatures for laboratories are indicated at Appendix A, generally 26C. However, designers shall be responsible to coordinate with the equipment designer and user to establish whether temperature-sensitive equipment is expected to be utilized in a laboratory space. When such equipment requires, for proper operability or to meet warranty limitations, an ambient temperature lower than can be maintained by the HVAC/Control System when set at 26C, the designer shall coordinate with the Design Agent to establish a reasonable lower design temperature for that space.

8.2.7 Temperature during Smoke Control Operation. When a supply air system is required to operate on 100% outside air during smoke mode operation, the system shall be designed with sufficient heating capacity to maintain a minimum of 45 degrees at the air handling unit discharge under the 99% winter design conditions.

8.2.8 Mechanical Equipment Rooms. In general, mechanical equipment rooms shall be designed with ventilating systems which will maintain temperatures within 5.5C of summer ambient design temperature. However when these equipment rooms house temperature-sensitive electronic components, such as microprocessor based controls, electronic circuit breakers, etc., designers shall confirm the ambient requirements of such equipment and design accordingly.

8.3 Refrigerants. Refrigeration equipment shall utilize refrigerant having an Ozone Depletion Potential (ODP) of not greater than 0.05. Refrigeration room design shall include the safety features, such as sensing devices, purge ventilation system, etc., as required for the particular refrigerant in accordance with ASHRAE Standards 15 and 34 (references 8j and 8k).

8.4 Life-Cycle-Cost/Energy Analysis. HVAC equipment selection shall include life-cycle cost analysis of the available equipment or system alternatives meeting the medical functional requirements, in accordance with guidance given in Section 7.

8.5 Eligibility for Air Conditioning.

8.5.1 Total Air Conditioning. Air conditioning is *required* in all normally-occupied facilities and spaces in which the interior conditions listed in Appendix A cannot be met through natural ventilation alone. “Normally occupied spaces” will include such spaces incidental to medical facilities as corridors and circulation areas. Normally unoccupied, or intermittently occupied, spaces such as restrooms, locker rooms, soiled linen rooms, janitors closets, and similar spaces accessible to medical staff or the public and having exterior exposure shall be air conditioned (in addition to being provided with the required ventilation) to maintain reasonable conditions.

8.5.2 Food Service Area. Air conditioning of the kitchen areas shall be designed to avoid the waste of energy. Designs shall consider utilizing dining room transfer air or tempered make-up air for vented equipment exhaust, spot cooling, exhaust system heat recovery, and other energy saving strategies to minimize energy costs while providing a *reasonably* comfortable environment for kitchen staff.

8.5.3 Not Authorized Air Conditioning. The following areas shall not be provided with air conditioning. Heating and/or ventilation shall be provided as required to meet criteria.

a) Motor Vehicle Storage Areas

b) Energy (Boiler/Chiller) Plants

c) Mechanical Equipment Rooms, unless containing sensitive electronic equipment requiring temperature control.

d) Toilets/Showers and Locker Rooms *not located with outside exposure.* Note that locker rooms which do not include a shower room or toilet may be recirculated.

8.5.4 Medical Warehouses. HVAC design shall be based upon the environmental requirements of the stored materials. Materials with critical temperature or humidity requirements should be stored in separately partitioned areas from materials having less critical requirements, to avoid the needless expenditure of air conditioning energy, if such design is cost effective. Spaces within medical warehouses which will be normally occupied, including Administrative or Break rooms, shall be air conditioned as required to provide the design conditions listed in Appendix A. Air conditioning will also be required for any warehouse spaces housing computer or other environmentally sensitive equipment.

8.6 Mechanical Equipment Space.

8.6.1 Mechanical rooms for major air handling equipment, heat exchangers, prime movers, medical gas supplies, vacuum/air compressors, and other major mechanical equipment shall generally be located within the facilities with access to the outside of the building. Exceptions to locate equipment in penthouse equipment rooms, may be considered by the Design Agent if justified from a cost or functionality standpoint and if properly coordinated with the base/post engineers. Rooftop mounted air handlers should be avoided due to the difficulty of maintenance access, and consideration of safety and working conditions for O&M personnel. Mechanical room location and layout shall consider:

a) Sufficiency of space to enable access for operation, maintenance, and replacement of equipment.

b) Minimization of distribution runs.

c) Relative location to electrical equipment rooms: NEC vertical clearance/dedicated space requirements for electrical equipment will restrict or preclude the routing of piping and ductwork through these locations.

d) Relative location to communication rooms: adjacency of fan and communications rooms will create congested above-ceiling conditions where cable trays and ductwork converge.

e) Adjacency to corridors, as a path for the routing of ductwork.

f) Adjacency to spaces having stringent noise control requirements, or spaces with high ceilings which may restrict duct distribution space.

g) Potential future expansion of mechanical system capacity.

8.6.2 Chilled water and steam/hot water generators may be located in a separate energy plant. Utility lines connecting the energy plant to the facility shall be installed in a tunnel or other *accessible* enclosure providing maintenance access and protection from the elements.

8.7 HVAC System Design For Functional Areas. For HVAC design, a medical facility can be considered to contain six general areas including

Critical, Sensitive, Clinic, Administrative, Support areas, and Patient Bedroom areas. The primary considerations of the HVAC design are to provide the environmental conditions required to meet the functional requirements. Multizone, dual-duct, terminal reheat, variable air volume, and combinations of such air distribution systems may be considered for application in appropriate areas. If utilized, VAV systems will be of the minimum air quantity type. All-water, unitary, and fan-powered VAV systems will generally not be acceptable in medical facilities, due to their limitations in meeting ventilation requirements, increased contamination source potential, or increased maintenance requirements.

8.7.1 Critical Care Spaces. These spaces will normally be served by single duct terminal reheat or double duct systems. Simultaneous temperature, humidity, *and pressurization* control requirements for these spaces preclude the use of other types of systems.

8.7.1.1 Operating & Delivery Room (OR and DR) Air Systems. The room air supply system for Operating Rooms, Delivery Rooms, Cardiac Catheterization (hospital) Rooms, and Cystoscopy (hospital) Rooms shall be a ceiling supply type, located over the operating table or treatment area, using non-aspirating "low velocity" (0.2 - 0.41 m/s)(40-90 fpm) diffusers that isolate the air over the operating or treatment area. Room exhaust/return provisions shall consist of a minimum of two exhaust or return registers, located at diagonally opposing corners of the room, mounted with bottoms of registers between 150 mm (6 in) and 230 mm (9 in) above finished floor. The HVAC system for anesthetizing locations, including operating and delivery rooms, shall be designed in accordance with NFPA 99 to (a) prevent recirculation of smoke originating within the surgical suite and (b) prevent the circulation of smoke entering the system intake, without in either case interfering with the exhaust function of the system.

8.7.1.2 Continuity of Service. The design for the HVAC systems serving Critical Care spaces shall include the following:

a) The Air Handling Unit(s (AHUs) serving Operating or Delivery Room suites shall be separate, independent units serving only the respective Surgical or Obstetrical Department or portions thereof, to enhance the reliability of these systems and minimize demand on the emergency power system. The air handling unit(s) serving each suite may also provide service to other Patient Care or support areas outside the respective Surgical or Obstetrical Department. A maximum of four ORs or four DRs should be served by any single AHU. Where a facility has four or fewer ORs, these should be served by at least two separate air handling systems, to enhance reliability; A similar consideration should apply for DRs.

b) HVAC equipment, including controls, which serve Critical Spaces (including ventilation and pressure controls for isolation bedrooms) shall be connected to the emergency electrical power system. This shall include a sufficient number of chillers and boilers, with necessary supporting equipment, to meet critical design loads.

c) Designs shall include features to minimize HVAC service interruptions to Critical Care spaces, without the provision of redundant air handling units or distribution systems. Provisions shall be such that service interruption to any Critical Care space, as a result of failure of an air handling unit component or its supporting electrical or controls systems, shall be minimized. Such features may include the provision of multiple, isolatable, heating and cooling coils, spare stock of replacement motors, drive belts, and bearings in the immediate vicinity of the equipment room, dual fan units, "manifolded" ductwork connections between AHUs, or other measures providing for continuity or expeditious restoration of service.

d) Air Handling Units, with associated controls, which serve critical care spaces and patient bedrooms shall be connected to the electrical emergency power system.

8.7.2 Sensitive Areas. These are spaces or areas in which equipment or processes may require special environmental control, including continuous (24 hours per day, year-round) air conditioning and individual room temperature and/or humidity control. Economic or operational considerations normally dictate provision of independent air conditioning systems for Sensitive Areas, to enable continuation of air conditioning when main building systems are shut down for repairs, or are operating in night setback or economizer mode. Minimum outside air ventilation shall be provided in normally occupied areas. For those sensitive spaces critical to continued hospital function and which require continuous cooling to remain in operation, appropriate backup or redundant features shall be provided to assure continuity of air conditioning in the event of primary air conditioning equipment failure. This may include the requirement for connection of air conditioning equipment to the emergency power system.

8.7.3 Administrative Areas. Administrative areas may be served by single duct reheat, multi-zone, VAV, or dual-duct systems, with perimeter radiation when required or advantageous.

8.7.4 Outpatient Clinics. Outpatient clinics may be served by single duct reheat, dual-duct, VAV, or multi-zone systems. Multi-zone systems may only be employed if the following conditions are considered: 1) ease of mechanical room duct egress, 2) no large disparity in zone size or load profile, 3) little likelihood of space repartitioning or rearrangement, and 4) proximity of space served to the mechanical room.

8.7.5 Support Service Areas. Support service areas may be served by single duct reheat, dual-duct, VAV, or multi-zone systems.

8.7.6 Patient Bedrooms. Normal-care Patient bedrooms may be served by dual duct, multi-zone, VAV, or single duct reheat systems. All systems utilized shall maintain minimum ventilation quantities under all conditions of operation. Perimeter radiation systems (radiant panels) may be considered in conjunction with these air systems. Fin-tube heating systems shall not be used in patient bedrooms.

8.7.6.1 Patient Isolation Bedrooms. Isolation bedrooms shall be served by airflow systems which maintain a constant differential between supply and exhaust air flow rates to maintain the required relative pressurization

of the space to the adjacent spaces and corridor. Refer to more detailed design guidance and requirements for isolation bedrooms under section 8.17 of this document. Pressurization control equipment serving Protective Isolation and Disease Isolation Bedrooms shall be connected to the emergency electrical power system.

8.8 General Design Considerations.

8.8.1 Plant Sizing and Optimization. Primary plant heating and cooling equipment for facilities having inpatient functions shall be designed to permit servicing of major equipment without total interruption of service. The plant shall be sized based on two principles; Boilers, chillers, and support equipment for the heating and cooling plants shall be configured and sized such that:

- with one major heat exchanger or pump out of service, the remaining plant equipment is sufficient to serve all critical care and patient bedroom loads, plus one half of all remaining loads within the facility.

- with one major heat exchanger or pump out of service for an extended period (one day or more) of maintenance, during the “off” season for such service, the remaining plant equipment shall be sufficient to meet the facility’s maximum load.

For such multiple boiler/chiller plants, designers shall utilize life cycle cost analysis to help determine the optimum arrangement, number, and capacity of machines.

8.8.2 Contaminant Removal. HVAC systems shall be designed to remove or reduce to acceptable levels volatile chemical and airborne microbiological contaminants within the facility. Systems shall be designed to remove excessive moisture in facility spaces and to control moisture and dust accumulation in air handling units, distribution elements, and chases, to avoid conditions permitting the growth of pathogenic, allergenic, or otherwise objectionable microorganisms.

8.8.3 Interdepartmental Air System Restriction. In general, individual facility departments should be served by dedicated air handling systems in order to increase system flexibility, energy conservation, facilitate comfort control, and reduce demands upon the emergency power system.

8.8.4 Air Filtration. Individual space air filtration shall be provided as indicated at Appendix A. 25% or 30% efficiency "roughing" filters shall be provided upstream of all coils, velocity sensing devices, or other devices requiring protection from dust accumulation. “Roll filters”, cleanable media, or other filtration systems requiring more intensive maintenance should be avoided. Designers shall carefully consider the location of filters relative to humidifiers to minimize the possibility of wetting the filter media.

8.8.5 Balancing Ports and Features. Necessary controls, instrumentation, and balancing ports and devices shall be provided to

establish and maintain the required space temperature, relative humidity, and air changes rate, and to facilitate balancing procedures for all systems.

8.8.6 Additions and Alterations to Existing Facilities.

8.8.6.1 Site Investigation. Designers shall conduct thorough investigations of existing facilities to be upgraded or modified, to become knowledgeable with facility conditions, as established by the terms of their design contracts. This includes the need to inspect concealed spaces (above-ceiling plenums, equipment rooms, chases, etc.) to permit evaluation and accurate depiction of as-built conditions which can affect new work. Design agents shall assure that this requirement is met; it is advantageous that the expected scope of the site investigation be discussed in detail with the designer during project prenegotiation and “kickoff” meetings. Generally, designers should be required to directly inspect all equipment rooms and all above-ceiling areas in such a number of locations as to reasonably establish the existing conditions. In facilities with “hard” ceilings, this may require the creation of a suitable number of inspection openings: design agents shall define in Project Design Instructions the responsibility for making and repairing such openings. Structural and architectural building elements, as well as existing equipment, that restrict equipment distribution space should be directly verified to the extent reasonably practicable. The design team must recognize the economic advantages of a detailed designer site investigation: if the designers do not verify conditions, the construction contractor must do so, normally at a cost premium reflected in higher bidding costs (unknown conditions) and change orders (changed conditions).

8.8.6.2 Modifications to Existing Systems. Too often in the past, addition/alteration project design documents have failed to provide the detailed engineering guidance required to sustain operation of systems serving occupied areas, leaving this engineering responsibility in the hands of QA personnel or construction contractors. The results have included loss of critical services, inadequate system performance, project completion delays, and costly change orders. Therefore it is hereby emphasized that it is the responsibility of the project designer to carry out all aspects of the design which can reasonably be accomplished during the design phase. Modifications to existing equipment and systems, including temporary connections, changes to system performance, or measures necessary to sustain service, shall be shown and described in detail in project design documents. Designers shall evaluate the impact on existing systems of extensions of service which increase system demand. The locations of new connections shall clearly be shown and/or described. The designer shall determine, and document for the design agent’s information, any project work which will necessitate a reduction or interruption of any service to an existing, occupied area

8.8.6.3 Protection of Patients From Construction Contaminants. For additions or alterations to existing hospitals, measures shall be provided to minimize contamination of existing hospital areas, during the construction period, and the associated HVAC systems serving them. Measures to reduce the potential of contamination and nosocomial infections include but are not limited to negative isolation of construction areas, construction of effective dust barriers (including double barrier air locks

at entrances and exits) separating construction from occupied areas, protection of air distribution systems serving occupied areas, and disinfection of any reused ductwork. Designers should consult with the facility's infection control representative during the design process to assure thorough coordination of design features that may affect patient welfare.

8.8.6.4 Construction Phasing Plan. Designers shall develop a phasing plan, consisting of detailed written instructions as well as any graphic/drawing aids necessary to clearly communicate the content, location, and sequence of work activities. The plan shall identify the scope, duration, and timing sequence of each individually identifiable work item, with all required lead-in, preparatory, and commissioning activities.

8.8.6.5 Commissioning Considerations. More so than in new, stand-alone facilities, off the shelf guide specifications fall short of providing for all of the required commissioning procedures. In particular, designers shall show and specify the procedures required for interim, as well as final, commissioning for systems constructed (or altered) and placed in operation segmentally.

8.8.7 Cooling and Heating Load Calculations.

8.8.7.1 Heating Load Calculation. Calculations used for determination of primary and airside (including reheat) heating equipment should not include credit for internal load sources, including lighting, people, and equipment. These loads are typically not present, or are much reduced, at night and on weekends. Heat calculations should also take into consideration morning warmup loads when night setback temperatures are utilized in non-ward areas.

8.8.7.2 Equipment Heat Generation. In many spaces within facilities, the primary component of cooling loads will be equipment heat generation. It is therefore necessary for accurate load determination that the HVAC designer coordinate on a project-by-project basis with the equipment designer, and with the individual Using Agency, to identify all individual equipment items and the corresponding load contributions. To estimate equipment usage duration and frequency, designers shall gather information from the Using Military Department, or if unavailable from that source the manufacturer, personal experience, or other sources. Determine average heat output from manufacturer's information. In performing load calculations, designers shall consider the as-designed equipment provisions of each unique space. "Rules of thumb" loading assumptions are not acceptable for final design calculations.

8.8.7.3 Lighting Loads. Lighting loads present a significant component of medial facility cooling loads and as such require consideration of the as-designed lighting fixture numbers and characteristics of each space. "Rules of thumb" lighting load assumptions are not acceptable as the basis for final design load calculations.

8.8.7.4 Envelope Components. Minimum insulation values for building envelope components are listed in Section 7 of this manual. U-value calculations shall take into consideration the "fin effect" of metallic

elements of wall and roof construction, as for example the effect of steel studs in walls which may as much as halve insulating effectiveness of batt insulation.

8.8.8. Piping Systems.

8.5.8.1 Pipe Routing. Piping distribution systems should be routed above corridors whenever practicable, to minimize leaks, maintenance intrusion, and noise in occupied areas of the medical facility.

8.8.8.2 Thermal Expansion. Designers are responsible for designing all aspects of piping systems necessary for the control of thermal expansion, and for showing the necessary control features on design drawings. This includes showing and dimensioning as applicable, the approximate locations of guides, anchors, expansion ells and offsets, and flexible couplings, as well as any other piping features which may affect expansions forces in the piping. The intent of this requirement is to assure that this critical aspect of piping design is accomplished by the qualified mechanical engineer selected for the project design, and not by a construction contractor of unknown engineering ability or qualification. In the case of direct-burial (ie., pipe within a pipe) underground heat distribution systems, engineering of the expansion compensation features by the system manufacturer may be preferred or necessary. Designers shall design piping systems such that piping expansion forces are isolated from equipment. Design Agents shall provide that contractor’s shopdrawing layout drawings of hot piping systems are reviewed by the designer or by an equally competent engineer representative of the government.

8.8.8.3 Steam and Condensate Piping. Steam in excess of 20 psig shall not be distributed in above-ceiling areas of a medical facility, or in utility corridors or chases adjacent to normally occupied spaces unless substantial concrete, masonry, or metal protective barriers are provided. Designers shall show the required direction and degree of line slope on drawings, and shall provide and show the locations and details of drip traps and other drainage features.

8.9 HVAC System Controls

8.9.1 Energy Conservation. To the extent compatible with medical functional requirements and life-cycle cost effectiveness, energy-conserving controls and features shall be utilized in the HVAC design. Such strategies include but are not limited to economizer cycle, alternate energy sources, night setback or set-up (for non-24 hour operations), exhaust air energy recovery, compressor heat recovery, and ventilation delay. Refer to Section 7, Energy and Water Conscious Design, of this military handbook for more detailed treatment of energy conscious design requirements.

8.9.2 Temperature Control. Individual room temperature controls shall be provided for all Critical spaces, Sensitive spaces, Patient Bedrooms, and Laboratories, to closely maintain the room conditions provided at Appendix A. Zoned temperature control shall generally be utilized for other spaces within the facility.

8.9.3 Control Precision. Temperature controllers shall maintain space temperature within +/- 1.1 ^{o}C (2 ^{o}F) of design setpoint, as provided for the individual spaces at Appendix A. The summer and winter design setpoints normally differ. For some spaces, a temperature range is given as the summer, or winter, interior design condition in lieu of a specific temperature setpoint. The HVAC system for such spaces shall be designed with the capability, under design conditions, to maintain any selected temperature within that range.

8.9.4 Humidity Control.

8.9.4.1 Humidity controls shall be provided as necessary to meet the requirements given for individual spaces at Appendix A. Humidity controls for Critical and Sensitive areas shall be provided on a room basis. Humidity controls for all other spaces may be provided on a zone or system basis as determined to be sufficient to maintain the required conditions. Note that for spaces for which precise relative humidity requirements are not stated, humidity controls may be required to maintain an envelope of 30% to 60% RH during normally occupied hours; for such spaces, designers shall determine the likely interior RH, based upon outside air conditions and interior latent loads. Humidifiers are problematic from a maintenance standpoint, and should not be utilized except when analysis indicates that RH will drop below 30% for significant amounts of time.

8.9.4.2 Humidifying Equipment. Air handling system humidification shall be achieved utilizing direct steam injection, with a steam source in accordance with 8.10.1. Designers are responsible to designate the location of steam injectors relative to ductwork and air handling unit components, and so design them as to minimize concerns with moisture collection in/on the downstream elements. Provide a minimum of 3 M (10 ft) of straight ductwork, with no takeoffs, reducers, duct lining, or other components, immediately downstream of the injection location; If this separation space is not available, the design engineer shall provide a detailed design, considering duct dimensions, airflow velocity and psychrometric condition, and number and location of injection orifices, with necessary instructions to the construction contractor, to maximize the probability of moisture reevaporation before impact with downstream elements.

8.9.4.3 Trim Humidification for Critical Spaces. For a minimum distance of 2M downstream of trim humidifiers serving critical spaces, ductwork shall be constructed of stainless steel or aluminum. In addition, the humidifier shall be separated a minimum 4.5 M upstream from high efficiency final filtration; when this separation cannot practicably be achieved, a detailed design for the humidifier shall be provided as addressed at 8.9.4.2.

8.9.5 Digital Electronic Controls. HVAC control systems shall be of the digital electronic type, utilizing either a direct digital control (DDC) or the Corps of Engineers Single Loop Control System (SLC), according to the direction of the Using Agency for the particular project. When a Using Agency determines that communication between a facility’s DDC system and a remote Energy Management and Control System (EMCS) is required to facilitate maintenance, the design shall assure that the DDC system is

seamlessly compatible with the EMCS system. DDC systems shall provide distributed control, with individual equipment digital controllers ("applications specific controllers" or similar terminology) capable of stand-alone control of major equipment, and communicating with a central monitoring/reporting/ station as appropriate.

8.9.5.1 Energy Monitoring and Controls Systems (EMCS) . No remote EMCS system (ie., not located in the medical facility or its associated energy plant) shall be permitted to exercise control over any hospital HVAC system equipment providing service to Critical Care Spaces. Remote EMCS systems may be provided with monitoring, alarm, and reporting capabilities as necessary to facilitate maintenance activities.

8.10 Steam Systems.

8.10.1 Humidification Steam Source. Steam generated by heating system boilers, or any other steam containing harmful concentrations of amines or other treatment chemicals, shall not be used for space humidification. Separate steam generators for humidification shall be provided. The design shall include provisions to minimize the effects of system corrosion resulting from the heating of undeoxygenated water.

8.10.2 Sterilizer Steam Source. Steam generated by boilers located in an on-site (hospital-dedicated) boiler plant may be utilized for sterilization steam subject to approval by the individual military department. As hospital authorities cannot normally exercise a reasonable degree of supervision or control over treatment chemicals utilized in base-wide or district systems, steam from these sources may not be utilized for direct sterilization. Unlike humidification steam, which is injected directly into the air supply, little sterilizer steam will escape into a facility's general environment. Under a reasonably responsible boiler treatment program, any steam which does escape will not result in dangerously high levels (OSHA RELs, etc.)of treatment chemicals in the environment.

8.10.3 Designer Qualifications. Projects involving the design of extensive medium or high pressure steam systems require the services of engineers highly experienced in this specialty. Too often, experience has shown that mechanical designers unfamiliar with steam system design err in the design of expansion compensation, condensate collection and handling, and equipment selection. Design Agents must insist on proper qualifications for designers of these systems.

8.11 Air Handling and Distribution.

8.11.1 Air Handling Unit Considerations. Air handling units are to be double wall, internally-insulated, readily maintainable units suitable for utilization in medical facilities. Draw-through units are normally preferred, to utilize fan heat to increase the dry bulb air temperature above the saturation point and minimize the possibility of wetting downstream filters, attenuators, or other components. Provide for access doors immediately upstream and downstream of all coils, to facilitate cleaning and proper installation of the unit freezestat.

8.11.2 System Shutdown Capability. To the extent practical and cost effective, non-critical, *non-bedroom* area HVAC systems shall be designed to permit shutdown (night setback/setup, outside air shutdown) of individual areas or departments not in operation on a 24-hour basis. *Ventilation of toilets, battery vaults, and other normally-exhausted spaces shall be continued without interruption as warranted.*

8.11.3 Outdoor Air Intakes. Outdoor air intakes shall be located as far as practical, but not less than 9000 mm (30 ft), from exhaust outlets of ventilation systems, cooling towers, combustion equipment stacks, medical/surgical vacuum systems exhaust, plumbing vent stacks, emergency generator exhaust, or from areas which may collect vehicular exhaust and other noxious fumes. Locate the bottom of air intakes serving central systems as high as practical but not less than 2400 mm (8 ft) above ground level, or if installed above the roof, at least 900 mm (3 ft) above roof level. Outdoor air shall not be drawn from equipment rooms. Designers must utilize judgement in the location of contaminant exhausts, and not simply apply the “9M rule” without further consideration of wind direction and velocity, building geometry, and characteristics of the contaminant stream. Appropriate consideration shall be given to prevailing wind direction, summer and/or winter as applicable; however designers are cautioned not to rely on prevailing wind direction(s)as a primary factor in the avoidance of intake contamination. In particular, use extreme caution in locating outside air intakes in proximity to parking areas, ambulance garages, loading docks, exhaust air outlets, and equipment stacks. Where appropriate, Design Agents will provide in individual project design instructions for special computational fluid dynamics (CFD) or wind tunnel modeling to provide greater assurance of the correct location of outside air intakes.

8.11.4 Balancing Provisions. Duct branches serving each individual space shall be provided with a manual balancing damper, accessible above the ceiling, located as remote from the space supply or return fixture (diffuser, register, etc.) as practicable. The balancing damper provided as part of air diffusers is not to be used for system balancing.

8.11.4 Noise Control. Noise Criteria (NC) for individual rooms and spaces in the facility are provided at Appendix A of this document. Additional and detailed information and requirements of building noise control are addressed at Section 23, Acoustics, of this military handbook.

8.11.4.1 Room Breakout. The HVAC designer shall coordinate with the architectural designer to control equipment noise passing from mechanical rooms into adjacent spaces through the surrounding walls or partitions.

8.11.4.2 Crosstalk. The compromising of patient privacy by transmission of audible speech from one room to another via ductwork is of great concern in medical facilities, and shall be addressed by HVAC designers. Examination rooms, physician's offices, and toilets require the designer’s particular attention. Ductwork connecting adjacent rooms must have the necessary attenuating characteristics to eliminate audible speech transmission. Typically this is addressed by the provision of well-separated “takeoffs” and/or several duct elbows in the intervening ductwork or, in more extreme instances, attenuative lining; Due to the indoor air

quality concerns associated with the latter, internal duct lining should be avoided when possible and may not be used in inpatient areas.

8.11.4.3. Air Fixtures. Air distribution supply, return, and exhaust fixtures (diffusers, grills, etc.,) shall be sized to provide air inlet/outlet velocities consistent with room NC level requirements as provided at Appendix A. Designers must be aware that diffuser manufacturer's published noise characteristics are based upon idealized inlet conditions: crinkled flex duct, abrupt branch duct connections, elbows located immediately at the diffuser collar, and similar poor connections may result in unacceptable noise levels. Spin-in or other 90 degree duct drop connections to diffusers shall be equipped with equalizing grids as necessary to assure uniform air distribution at the diffuser inlets.

8.11.4.4 Air Velocity. Designers shall limit air velocities in ductwork (see additional guidance below), air transfer grills, or door undercuts to values consistent with ASHRAE recommendations to control noise generation.

8.11.4.5 VAV/CAV Terminal Units. Variable Air Volume Terminal units and constant velocity controllers are a frequent source of noise generation in air distribution systems. Designers shall specify or schedule units with minimum inlet sizes for incremental ranges of flow, and shall indicate maximum sound power output for each unit, at the maximum inlet static pressure which the designer anticipates that the unit will be exposed to. If integral sound attenuating devices are required, these shall be indicated for the respective terminal unit(s) is specs or drawing schedules.

8.11.4.6 Exterior Noise Sources. Designers shall evaluate the sound characteristics of exterior equipment provided as part of the project design (such as cooling towers, emergency generators, etc.) to assure that such sources do not result in interior noise levels exceeding limitations provided in Appendix A.

8.11.5 Duct Design. Duct systems shall be designed in accordance with references 8a, 8b, 8e, and 8l. Maximum velocity in ductwork mains shall not exceed 760 M/m (2500 fps), and velocities in branch ducts and takeoffs shall not exceed recommended levels in these standards. Ductwork plans shall indicate the static pressure class required for sealing and reinforcement for all types of duct. Access panels shall be provided as necessary for access to fire dampers, smoke dampers, and control equipment, and to facilitate periodic cleaning or disinfecting of ductwork. All supply air, with the exception of air transferred between spaces for the purpose of pressurization, shall be provided in sheet metal ductwork.

8.11.5.1 Non *Corrosive* Ductwork Material. Ductwork installed downstream of high efficiency final filters (90% or greater, see Appendix A) or trim humidifiers, serving critical spaces, shall be of stainless steel, or aluminum, including all accessories such as dampers, fasteners, and turning vanes. This provision does not apply for ductwork downstream of high efficiency filters when these are located at the air handling units (filters noted in the "intermediate" column in Appendix A). Exhaust ducts for glass washers, dishwashers, and cart washers shall be non-corrosive and shall have soldered or welded joints and shall be pitched to drain.

Ductwork for laboratory equipment is covered elsewhere in this section.

8.11.5.2 Return Air Plenums. Corridors shall not be used as return air plenums in any portions of facilities. Exceptions allowing transfer air for toilets and janitor's closets, as provided in NFPA 90A and 101, (references 8d and 8h) shall be permitted. Utilization of above-ceiling areas as return air plenums shall not be permitted in inpatient or critical-care areas of facilities. Utilization of above-ceiling areas for return or exhaust air in portions of facilities not classified as healthcare occupancy is discouraged but may be considered on an individual project basis when justified by overriding cost or vertical space constraints.

8.11.5.3 Duct lining. The utilization of duct lining materials is generally discouraged in all medical facilities. These materials may harbor dust and moisture, providing an ideal environment for the propagation of pathogenic or noxious microorganisms. In addition, inevitable duct modifications or careless installation procedures lead to breaks in the duct lining sealer. Factory fabricated sound attenuators, packed type, which comply with ASTM C1071 and UL 181, shall be used in lieu of duct lining to attenuate fan noise, when practicable. Duct lining, where permitted, shall also meet the requirements of ASTM C1071 and UL 181. No duct lining materials which are porous to the airstream may be utilized in any air distribution system serving inpatient diagnostic, treatment, or bedroom areas (including all Critical spaces); factory fabricated sound attenuators with liners which resist moisture penetration of the acoustical packing material may be utilized for these applications.

8.12 Maintenance Provisions.

8.12.1 General Personnel Access. Safe and practical means of personnel access must be provided to, and within, all areas of the facility where equipment is located, to adequately provide for operation, maintenance, and replacement (O&M) of the equipment. Access to equipment rooms from outside the facility should be provided where feasible. Within equipment rooms, a minimum of 0.75M (2.5 ft) (of clearance is generally required at all service points to mechanical equipment to allow adequate personnel access and working space. The design of O&M personnel accessways should not provide less than 1.7M (5.5 ft) of overhead clearance (except on intermittent basis), or require personnel to climb over equipment or crawl on hands and knees. When rooftop air handling units are provided, coordinate with the architectural designer to provide pavers or other personnel access pathways which will not damage the roof.

8.12.2 Equipment Clearances. Minimum clearances between electrical and mechanical equipment shall be as required by NFPA 70, (reference 8m). Assure that practical means are provided for the removal/replacement of the largest and/or heaviest equipment item(s) located in the facility. Provide adequate pull space for all coils, heat exchangers, chillers, boiler tubes, and filters. Sufficient space shall be provided in above-ceiling areas to facilitate equipment installation and O&M. For building designs utilizing interstitial floor distribution zones, further guidance is provided at Section 19.

8.12.3 Suspended/Mounted Mechanical Equipment. Where suspended and mounted equipment is installed, provide a minimum of 1700 mm (67 in) of clearance for headroom as required. In refrigeration equipment rooms, provide overhead clearances required by ASHRAE 15, (reference 8j). For any work station or location requiring maintenance access, which is not readily accessible from a 1800 mm (6 ft) high portable ladder, provide a fixed ladder and/or catwalk.

8.12.4 Air Distribution System Components. Outdoor air intake plenums, air handling unit casings, and distribution ductwork shall be designed to permit access for periodic cleaning or disinfection.

8.12.5 HVAC System Balancing Provisions. Adequate access shall be provided to facilitate operation, adjustment, and testing at all HVAC balancing and measuring points and equipment, including automatic and manual damper operators, air terminal units, pilot tube ports, valves, and sensing devices.

8.13 Vibration Control. All prime moving equipment shall be isolated to prevent transmission of vibrations to the structure. Additional information and requirements addressing vibration control are contained at Section 23, Acoustics, of this military handbook.

8.14 Interdisciplinary Coordination.

8.14.1 Fire Protection Features.

8.14.1.1 Smoke and Fire Dampers. HVAC service zones should be designed to coincide with smoke zones whenever practicable. Ductwork penetrations of fire/smoke rated walls should be minimized, to minimize the required number of smoke/fire dampers and complexity of controls. Coordinate with the architectural design to assure that necessary access for inspection or service of these dampers is provided.

8.14.1.2 Ductwork. Air supply and exhaust systems shall be of the mechanical ventilation type and shall meet the requirements of NFPA 90A and 96, (references 8d and 8e). If used, duct lining materials shall meet the smoke generation and flame spread limitations as required by MIL-HDBK-1008, (reference 8p). Grease-laden vapor exhaust ductwork shall be in accordance with NFPA 96.

8.14.1.3 Smoke Mode Operation . Air handling and distribution systems shall react to the detection of smoke in accordance with NFPA 101 and 90A. Where required by NFPA 101, NFPA 99, or ANSI A17.1, smoke evacuation or venting features shall be provided.

8.14.1.4 Commissioning of Fire/HVAC Systems. Guide specifications typically do not contain provisions for the simultaneous testing of HVAC and fire protection systems, which can have complex, interwoven operational requirements in some facilities. For each project where applicable, designers shall develop or modify specifications as needed to provide for testing of HVAC systems under fire alarm conditions, to permit verification not only of correct function, but of acceptable speed of response. In more complex systems involving smoke evacuation or compartmentalization/pressurization, detailed testing protocols and/or

system diagrams must be developed to clearly convey the required scope of the commissioning effort.

8.14.2 Emergency Electrical Service.

8.14.2.1 Capacity. The HVAC system equipment serving Critical areas shall be connected to the essential electrical power system, to assure service continuation in the event of normal power disruption, in accordance with the requirements of NFPA 99 (reference 8c). Cooling, as well as heating, shall be maintained to Critical areas in the event of normal power outage.

8.14.2.2 Commissioning. Service guide specifications do not adequately address testing requirements for HVAC/Emergency Power System (EPS) interoperability. HVAC systems connected to the EPS must be shown to function as intended under conditions of normal power interruption. Testing of the EPS must be conducted in conjunction with any components of the HVAC system required for support; For example, thermostatically operated louvers may be required in emergency generator rooms for makeup air, generator radiator cooling may be a function of such HVAC components as pumps or cooling tower, etc. Testing must verify the actual connection of HVAC equipment to the EPS in accordance with the design following normal power outage, in the priority sequence established by the design. Designers shall supplement or modify guide specifications to assure that such verification testing is adequately detailed and described.

8.14.3 Seismic Design Requirements. Refer to Section 6 for seismic provisions for the HVAC system equipment and components. Designers shall be responsible to assure that seismic bracing of HVAC piping is coordinated by design with thermal expansion compensation features, to allow for the necessary pipe movement with temperature changes.

8.14.4 Design Coordination. Designers are responsible to coordinate the HVAC with the electrical, communications, architectural, and structural aspects of the design to assure that equipment can reasonably be installed by a contractor providing equipment, and following installation procedures, within the terms of his contract. For this reason, designers are instructed to base equipment room and distribution space designs upon spatial envelopes (including maintenance clearances) which will accommodate any of at least three manufacturers of major equipment. Routes of ductwork and piping must be carefully coordinated with other elements, considering required slope, insulation, bracing, reinforcement, slope, and maintenance access. This practice in no way infringes on or substitutes for the construction contractor’s responsibility, to be defined in project specifications, to coordinate the installation work of all trades and to provide detailed shopdrawings showing the proposed construction; Rather, it assures that the contractor will be able to achieve his goal without the necessity of additional design work.

8.14.4.1 Equipment Rooms. To assure adequate coordination, designers must consider not only the HVAC equipment, but the work requirements of other trades. Assure adequate clearance around air handling units to permit bolting the units together and securing them to their housekeeping pads, meanwhile providing space for the general contractor to install wall

partitions. Consider the locations of plumbing and medical gas equipment. Assure it will be possible for maintenance workers to access all controls, electrical panels, valves, and instrumentation. Be aware of NEC clearance and vertical dedicated space requirements for electrical equipment. Coordinate ductwork, outside air plenums, etc. with the locations of lighting.

8.14.4.2 Above-ceiling Plenums, and Chases. Designers must anticipate the worst case insulation, duct reenforcement, equipment support, slope, and fitting characteristics associated with ductwork and piping distribution systems, and be careful to coordinate the location of these systems with other equipment, including in particular cable trays and lighting fixtures with their vertical access/clearance space requirements. Assure that access space is considered for damper operators, low point steam drip assemblies, VAV terminal units, reheat coil controls and instrumentation, service valves, and access doors for ductwork for cleaning or damper inspection.

8.15 Fuel Storage Requirements. Refer to Section 6 of this document, Seismic Design, for fuel storage requirements for facilities in seismic threat regions. Additional fuel storage guidance for boiler plants shall be obtained from the individual service criteria

8.16 Ventilation Design.

8.16.1 Ventilation Air Changes. Minimum air change rates for each space, for both outside air and total air, are provided at Appendix A. Ventilation rates contained in ASHRAE Standard 62-89 (reference 8q) shall be applied for spaces or applications not addressed by Appendix A. Based on the number of occupants identified for each space, calculate the outside air requirements of ASHRAE 62-89 and compare to the rates given in Appendix A, utilizing the more stringent figure in the design. The minimum outside air change rates in Critical Care Spaces shall be maintained at all times, except as addressed elsewhere in this Section for Operating and Delivery Rooms during periods of non-use. Reduced outside air ventilation in noncritical areas may be considered during non occupied times. In addition, a Corrected Outside Air Ratio, calculated in accordance with ASHRAE 62-89 section 6.1.3.1, may be applied for non-critical spaces. The outside air ratio for non-critical high-occupancy spaces, including classrooms, waiting rooms, auditoriums, and conference rooms, may be adjusted in accordance with the provisions of ASHRAE 62-89 Section 6.1.3.4. when the maximum occupancy peaks for a duration of less than three hours.

8.16.2 General Exhaust Provisions. Exhaust systems shall be provided for Central Sterile Decontamination(Ethylene Oxide), animal holding areas, autopsy/morgue spaces, laboratory fume hoods, radioisotope hoods, bacteriological cabinet, kitchens, laundry, toilets, isolation rooms, equipment rooms, and other areas as noted in Appendix A or as designated on an individual project basis. No duct system conveying potentially hazardous exhaust (ETO, lab hoods, etc.) shall be connected with a general or toilet exhaust system. All exhaust discharge outlets shall be located above the building roof line and located to prevent short-circuiting to air intakes or other building openings. Exhaust fans shall be located at the end of the exhaust duct run (exhaust ducts to be under negative pressure).

8.16.3 Space Pressurization. The required pressurization of individual spaces, relative to adjacent spaces or corridors, is indicated at Appendix A. Where a negative or positive pressurization are required for a given space, that pressurization shall be maintained by the HVAC system under all conditions of operation, including periods of reduced ventilation or night setback.

8.16.4 Laboratory Ventilation. Exit corridors shall not be utilized to directly supply or exhaust air from the laboratory, although "transfer" of air to/from corridors may be utilized to establish required room pressurization. Negative pressurization of laboratories in relation to surrounding occupancies shall be maintained under all conditions of HVAC system and fume hood operation.

8.16.4.1 Exhaust Systems. Laboratory equipment utilized for personnel protection from hazardous chemical, microbiological, or radioactive airborne particles or gases shall be provided with independent exhaust systems in accordance with NFPA 99,(reference 8c). Exhausts from general chemical laboratory fume hoods located within a laboratory unit may be combined into central exhaust systems in accordance with guidance in references 8c and 8g. Exhausts from hoods handling perchloric acid or other strong oxidizing agents, materials or agents requiring HEPA filtration, or exhausts which, when combined, chemically interact or change the explosion/ignition limits, may not be combined. Additional guidance for hood and exhaust design is contained at references 8a, 8b, 8c, 8g, 8j, and 8q. Exhaust duct discharge height shall be above the building recirculation cavity boundary. In all cases exhaust discharge shall have sufficient stack height, velocity, and distance from building openings, outside air intakes, or recirculating air currents, to preclude reentry into the building. Air velocity in exhaust ductwork shall be sufficient to transport the contaminant vapors, fumes, dusts, or other particulate matter for which the fume hood(s) is designed.

8.16.4.2 Laboratory Fume Hoods, General. Fume hoods shall be located in areas of minimal air turbulence, away from doors, windows, and traffic, to minimize disruption of required sash airflow. HVAC system/fume hood controls shall be designed such that operation or shutdown of any fume hood in a given space will not disrupt the required room air balance or the required sash airflow at other hoods operating in the space. General purpose laboratory fume hoods that control personnel exposure to chemicals and physical contaminants shall have a minimum sash face velocity of 0.508 m/s (100 fpm). Fume hoods shall be provided with audible and visual alarms to indicate inadequate sash airflow conditions.

8.16.4.3 Radioactive Material/Radioisotope Hoods. Duct systems serving hoods for radioactive material shall be constructed of acid resistant type stainless steel for their entire length. Ductwork shall be flanged with neoprene gasketed joints to facilitate dismantlement for decontamination. Fume hood exhaust shall remain in constant operation, and shall be filtered with carbon and/or HEPA filters as required to meet Nuclear Regulatory Commission (NRC) requirements. The location of filters in the system shall be chosen to best facilitate their safe removal, disposal, and replacement by maintenance personnel. All filters shall be automatically monitored to provide indication that changeout is required. All hoods

shall comply with requirements of the Nuclear Regulatory Commission.

8.16.4.4 Canopy Hoods for Prosthetic Dental Laboratories. Canopy hoods for Prosthetic Dental Laboratories, and exhaust ductwork extending for a distance 3000 mm (10 ft) downstream from the hood connection, shall be fabricated of material which is corrosion resistant to the caustic fumes emanating from boil-out tanks and casting activities conducted in the laboratory.

8.16.4.5 Biological Safety Cabinets (BSCs). Class, Type, and location of BSCs shall be as directed by the using agency. Class II BSCs are provided with HEPA filtration of recirculated air and/or building exhaust, and are provided in such areas as Microbiology and Mycology. The required open door/sash face velocity for Class I and Class II Type A BSCs shall be 0.381 m/s (75 fpm), and for Class II Types B1, B2, and B3, shall be 0.508 m/s (100 fpm). For further information of biological safety hood Class, Type, application, and exhaust requirements, refer to references 8a, 8r, 8s, and 8t.

8.16.4.6 Perchloric Acid Hoods. Hoods for handling of perchloric acid and other strong oxidizing agents, and the associated exhaust ductwork, shall be constructed of stainless steel. Internal water spray systems shall be provided for hood and all ductwork to facilitate the periodic washdown. Joints shall be welded and ground smooth, and all ductwork pitched back toward the hood to facilitate drainage. More detailed guidance is provided by the ACGIH publication.

8.16.4.7 Containment Laboratories BL-3 and BL-4). These laboratories deal primarily with indigenous or exotic agents which may cause serious or potentially lethal disease as a result of exposure by inhalation. The HVAC design for these laboratories shall assure the continuous negative pressurization and exhaust of the space. The exhaust air from these spaces shall not be recirculated to any other area of the building, but shall be transported through dedicated exhaust ductwork to be directly discharged to the outside of the building. Design of BL-3 and BL-4 laboratory exhausts shall comply with latest editions of OSHA and other Federal regulations.

8.16.5 Exhaust Canopies. Exhaust canopies shall be provided for equipment or appliances generating high heat or moisture (steam) loads, such as glassware washers, boilout tanks, drying ovens, sterilizers, and stills, as required. In some cases, specially designed canopy hoods may be necessary to control personnel exposure to hazardous chemical vapors. Canopy hood design shall comply with the ACGIH data for "Canopy Hood" (reference 8b).

8.16.6 Laminar Flow Clean Benches. These horizontal flow hoods shall be used in pharmacy for preparing intravenous fluids and similar laboratory processes. Clean benches recirculate room air and do not require exterior air supply or exhaust systems.

8.16.7 Bench-Back Slot Hoods. Slot hoods are typically built into the wall behind laboratory benches to exhaust vapors, gases, and odors that are released with little energy or velocity. Typical applications are laboratories, brace shops, and other spaces in which volatile chemicals are routinely used. Design of these hoods shall be in accordance with ACGIH

guidelines, with a slot velocity of 10.2 m/s (2,000 ft/min).

8.16.8 Portable Bench-Top Hoods. Portable hoods with glass viewing panels and interior lighting may be used to control chemical contaminants of minor toxicity and odors. They shall be attached to built-in exhaust outlets with flexible ducts. Each built-in exhaust system outlet shall provide a minimum of 0.0755 m^3/s (160 cfm) or a face velocity of 0.38 m/s (75 ft/min) at the hood, whichever provides the maximum mass flow of air. The exhaust duct opening shall be provided with a blast gate and sealing plug to stop air flow when the unit is not in service.

8.16.9 Waste Anesthesia Gas Exhaust (WAGE). In each space utilized routinely for the administration of inhalation anesthesia or analgesic agents, a Waste Anesthesia Gas Exhaust (WAGE) disposal system for removal of waste anesthetizing gases shall be provided, designed in accordance with NFPA 99. Coordinate required system vacuum pressure and terminal fittings with using Military Department Anesthesiology and Oral Surgery Departments on an individual project basis.

8.16.10 Medical Equipment. See Section 16 of this military handbook for special ventilation requirements of medical equipment.

8.16.11 Ethylene Oxide. Sterilizers, aerators, manifold rooms, and disposal systems shall be directly exhausted to the outside by a dedicated exhaust system. ETO storage and supply systems and ventilation design shall be in accordance with 29 CFR 1910.1047, Section 16 of this manual, and the latest industry guidance. Ventilation provisions currently include such features as exhaust inlets above and below sterilizer door, waste water discharge, and floor drain. Ventilation of bottle storage rooms is also required. An audible and visual alarm shall be provided to warn of loss of airflow in the exhaust system. Increasingly, local and state regulations prohibit or limit the discharge of ETO to the environment. These shall be considered applicable to DOD medical facilities, and in such cases the design shall utilize ETO "scrubbers" or other approved technologies to prevent or reduce ETO emissions as required.

8.16.12 Kitchen Hoods. Exhaust hoods in the kitchen area are to be the type utilizing 80 percent unconditioned air and having an exhaust rate of not less than 0.0022 m^3/s per square meter (50 cfm per square foot) of face area. Face area is defined for this purpose as the open area from the exposed perimeter of the hood to the average perimeter of the cooking surface. If economically justified, hood makeup air should consist of up to 80% outside air tempered, through heat recovery equipment, by the exhaust. Equip all hoods over the cooking service equipment with fire extinguishment systems, automatic washdown and grease extractors, and heat-actuated fan controls. Cleanout openings, and required fire protective enclosures and separations, shall be provided in horizontal exhaust duct systems serving these hoods grease hood exhaust ducts in accordance with NFPA 96.

8.17 Patient Isolation Room Design. Isolation rooms consist of Disease Isolation and Protective Isolation rooms. The former is intended for the patient suffering from a known or suspected infectious disease, and is provided with engineering controls which assist in preventing the spread

of the disease from the room. Protective Isolation rooms are provided for the patient having an immune system deficiency, and require engineering controls to assist in the protecting the patient from contamination from outside the bedroom. Rooms shall be one or the other, and not “switchable” from disease isolation to protective isolation function, or vice versa. Isolation Bedrooms shall be provided with pressure-monitoring alarms and gauges mounted on the outside corridor wall; when a central DDC control operators station is provided, the alarm should in addition be connected to that system.

8.17.1. Disease Isolation Bedrooms. Disease Isolation bedrooms shall be designed to incorporate requirements and guidance contained in the Guidelines for Preventing the Transmission of Mycobacterium Tuberculosis in Health-Care Facilities (the TB Guidelines), published in the Federal Register Vol. 59, No. 208, 28 Oct 94 (or latest edition thereof). These rooms shall be negatively pressurized and exhausted to the outside, and provided with the minimum total and outside air change rates (12/2, respectively) referenced at Appendix A. Exhaust ductwork from the bedrooms, the associated toilet, and the anteroom (if provided) shall be “dedicated” in the sense that the system may serve only the bedroom suite or other disease isolation bedrooms. This exhaust system shall be connected to the building emergency power system. Bedroom suites shall be supplied by air systems provided with constant-volume control and measuring terminal units which automatically maintain the supply air flowrate setpoint to each space. Exhaust systems shall be constant volume systems maintaining a fixed exhaust flow rate for each space. When bedroom exhaust is located such as to prevent reentrainment into outside air intakes or other building openings, HEPA filtration of the exhaust is not required.

8.17.1.1 Existing Facilities. In existing facilities, only those bedrooms designated by the facility specifically for use as Tuberculosis Isolation Bedrooms are required to be designed in accordance with the TB Guidelines referenced above. TB Isolation Bedrooms shall be negatively pressurized and exhausted, and shall be provided with 12 air changes per hour if economically or physically practicable. When not practicable to achieve this air change rate, TB Isolation Bedrooms shall have a minimum of 6 air changes per hour, to be supplemented by HEPA filter or Ultra Violet Germicidal Irradiation (UVGI) systems specifically designed for TB Room applications and providing the equivalent of an additional 6 air changes per hour. Fixed-in-place HEPA filtration units are preferable to portable units, and upper-level UVGI systems are preferred over duct-mounted units, to enhance reliability. Room exhaust shall be conducted to the outside of the building; when designed to avoid reentrainment into outside air intakes or other building openings, HEPA filtration of the exhaust is not required.

8.17.1.2 Isolation Suite Relative Pressurization. When an anteroom is provided for the isolation bedroom, interposing between the bedroom and corridor to provide a “buffer” airspace for additional protection, there are several recognized design approaches for corridor-anteroom-bedroom relative pressurization. A recommended design is to provide for the anteroom to be under negative pressure relative to the corridor, and positively pressurized relative to the bedroom.

8.17.2 Protective Isolation Bedrooms. The air supply to the protective isolation bedroom suite shall be constant flow and shall be

provided with HEPA filtration. 15/2 total and outside air changes, respectively, are required for these bedrooms. As with disease isolation bedrooms, there are several recognized approaches to the relative corridor-anteroom-bedroom pressurization; A recommended approach is to establish the anteroom positively pressurized relative to the corridor, and negatively pressurized relative to the bedroom.

8.17.2.1 Existing Facilities. When upgrading existing protective isolation bedrooms to this criteria, 15/2 air changes per hour shall be provided if economically and physically practicable. When impractical, these bedrooms shall be provided with a minimum of 6 total air changes per hour and supplemented by HEPA filtration or UVGI systems to provide the equivalent of 15 air changes.

8.17.3 Disease Isolation Exam or Waiting Rooms. Disease isolation exam or waiting rooms shall be provided with a minimum of 12 total air changes, as provided in Appendix A, with the room air exhausted to the outside.

REFERENCES

8a. American Society of Heating, Refrigerating and Air-Conditioning Engineers, Inc. (ASHRAE) HANDBOOK Series.

8b. ACGIH, "Manual of Recommended Practices for Industrial Ventilation."

8c. NFPA 99, "Standard for Health Care Facilities."

8d. NFPA 90A, "Standard for the Installation of Air Conditioning and Ventilation System."

8e. NFPA 96, "Cooking Equipment, Vapor Removal."

8f. NFPA 801, "Facilities for Handling Radioactive Materials."

8g. NFPA 45, "Labs Using Chemicals".

8h. NFPA 101, "The Life Safety Code".

8i. Joint Services Manual TM 5-785, NAVFAC P-89, AFM 88-29, "Engineering Weather Data" .

8j. ASHRAE 15, "Safety Code for Mechanical Refrigeration".

8k. ASHRAE 34, "Number Designation and Safety Classification of Refrigerants".

8l. SMACNA, "HVAC Duct System Design".

8m. NFPA 70, "National Electrical Code".

8n. UL 181, "Standard For Safety, Factory-Made Air Ducts".

8o. ASTM C 665, "Mineral-Fiber Blanket Thermal Insulation".

8p. Not used.

8q. ASHRAE 62-89, "Ventilation For Acceptable Indoor Air Quality," American Society of Heating, Refrigerating and Air-Conditioning Engineers, Inc.

8r. OSHA - Part 1910, "Occupational Safety and Health Standards."

8s. CDC-NIH, "Biosafety in Microbiological and Biomedical Laboratories."

8t. Standard 49, "Class II (Laminar Flow) Biohazard Cabinetry", National Sanitation Foundation.

SECTION 9: PLUMBING AND MEDICAL GASES

9.1 General. This section provides design guidance for plumbing and medical gas systems for Department of Defense (DOD) medical treatment, training, and research facilities. The primary purpose of these systems is to provide safe and reliable support to the medical functional mission. In addition, appropriate design consideration shall be given to ensure system maintainability, economy and energy efficiency, and adaptability to future facility modification or expansion. For plumbing-related issues associated with fire protection systems, see the Fire Protection Section of this document.

9.1.1 Supplemental Criteria and Standards. These criteria may be supplemented by individual Military Departmental criteria, including installation-specific requirements, as established by the Design Agent. Minimum design requirements shall be as provided by the National Standard Plumbing Code (NSPC)(reference 9a) or the International Plumbing Code (IPC) (reference 9b), the National Fire Protection Association Standards, and the other documents listed as references.

9.1.2 Plumbing Systems. Plumbing systems include domestic cold and hot water; sanitary, storm, and industrial (acid) waste drainage; water treatment (such as softening, deionization, reverse osmosis); fuel gas; and landscape irrigation. Plumbing systems shall be designed to be safe, reliable and maintainable. Selection of materials, equipment, and installation techniques shall consider life cycle cost effectiveness and maintainability in addition to medical functional requirements. Designers are specifically alerted to provide for appropriate system isolation and balancability, and necessary equipment and design practices to avoid cross connections and backflow.

9.1.3 Seismic Requirements. Seismic design criteria are provided in the Seismic Design Section 6 of this document.

9.1.4 Corrosion Protection. All piping which will be installed in an environment that supports galvanic reaction shall be protected from corrosion in accordance with Military Department criteria and the standards and recommended practices of the National Association of Corrosion Engineers (reference 9c).

9.1.5 Waterborne Pathogen Prevention/Control. The Center for Disease Control (CDC) (reference 9d), the American Society of Heating, Refrigeration, and Air-Conditioning Engineers (ASHRAE) (reference 9e), the American Society for Healthcare Engineering (ASHE) and the Joint Commission on Accreditation of Healthcare Organizations (JCAHO) (reference 9f) have cited two main means by which waterborne pathogens are introduced into MTF’s - by the water supply system and cooling towers. Water-borne bacteria, chiefly Legionella, have been documented as the infectious pathogens in a significant percentage of nosocomial infections. The diseases associated with legionella infection are legionellosis, frequently resulting in pneumonia, and Pontiac Fever, a less severe illness. The guidance provided in this Section addresses control of Legionella in plumbing systems, and is based in principle on the recommendations found in these references. Typical water supply systems, including base or public central distribution and local wells, must be presumed to be contaminated with the Legionella bacteria. Standard water utility treatment and testing practices are not considered adequate to ensure protection against the bacteria entering a facility. It is therefore necessary that Legionella bacteria prevention and control guidelines be considered in MTF designs.

9.1.5.1 Legionella Characteristics and Transmission. The legionella bacterium is found throughout earth and water (aquifers, wells, reservoirs) environments, and must be expected in all water supplies. The greatest danger to humans occurs when the organism is permitted to multiply or “amplify” in a water supply system to the point that significant numbers of bacteria are present. Factors that lead to amplification include the following:

- Growth support deposits or coatings in system piping or equipment (e.g. scale, sediment, biofilm).

- A water temperature range of 25-42 degrees C (77-108 degrees F) of both supply domestic cold and hot water systems, including temperature at fixture discharge, hot water generator, hot water return distribution systems, and in storage or holding tanks,

- Stagnation in tanks, and supply and return distribution systems, for both cold and hot water.

Legionella bacteria become aerosolized in moisture droplets of less than 5 micrometer diameter (optimum transmission droplet size for sustained suspension in air), created by shower heads, faucet aerators, spray nozzles, respiratory equipment, water impacting on hard surfaces, and bubbles breaking (such as occurs in hydrotherapy bath whirlpools). Practical means for altering the aerosols that can lead to legionella infections are limited.

9.1.5.2 General Design Considerations. Legionella protection guidance is provided in applicable locations throughout this Section; however designers should also carefully consider provisions in the latest editions of the guidelines referenced at 9.1.5 above. Healthcare facility operational procedures for legionella control, such as cleaning or decontaminating of respiratory equipment and environmental sampling, are addressed in the referenced guidelines. The referenced guidelines also address disinfection techniques for reducing Legionella colonization in existing facilities, such as superheated water flushing and hyperchlorination shocking. Generally speaking, the goal of the legionella-protection design is not to eradicate the bacteria, but to prevent or limit colonization.

9.2 Potable Water Supply System,

9.2.1 Quality. All potable water supplies shall have an established potability monitoring program to be acceptable for use by an MTF. When an MTF project includes a non-potable water service (i.e., “gray water”) for systems such as irrigation, heating, or cooling, the design shall provide for requirements for signage, pipe labeling, and other means as needed to clearly identify the system (including outlets) as unsafe for human consumption.

9.2.2 Continuity of Service. To the extent economically practicable, provide a minimum of two water services for hospitals, with each service fed from separate mains and sources, and designed for full demand (serving potable, process, and fire protection systems). These services should enter the building at separate locations. The purpose of this provision is to provide an uninterrupted supply of potable water, or permit swift service restoration, in the event of a water main break. If two separate water sources are not practically available, on-site storage shall be considered. Where practical, loop the mains around the facility and provide sectionalizing valves.

9.2.3 Backflow Prevention, General. The flow of non-potable water, or any other nonpotable liquids, into the potable water supply shall be prevented. Necessary measures to prevent backflow, cross connection, or back-siphonage shall be included in the design. Cross connection of a municipal and installation-dedicated (well-based, base pumping station, etc.) system shall require approval from the local Administrative Authorities. Generally, backflow isolation will be required on the main supply mains serving an MTF; Designers shall coordinate backflow prevention requirements, including requirements for maintenance accessibility and periodic testing, with the local municipality or Base Engineer, as appropriate.

9.2.3.1 Devices and Methods. All potable water discharge points, such as a faucet discharging into a reservoir sink or tub, shall be provided with an adequate air gap, in accordance with referenced criteria. Fixtures or equipment where the discharge point is positioned below the reservoir rim shall be fitted with a vacuum breaker. Examples of concern include the following:

- Bedpan washers, or similar fixtures including a flushometer valve.
- Flexible-hoses or shower heads, of length sufficient to reach below fixture rim, typically found in procedure rooms, hydrotherapy bath equipment, laboratories, and food service areas (e.g. washers, steam tables).
- Laboratory or other serrated-nozzle fixtures designed to accept flexible tubing.
- Water delivery outlets serving therapeutic, surgical, or autopsy/mortuary procedures.
- Hose bibs.

For the protection of makeup supplies to low hazard equipment (such as autoclaves and fire protection sprinkler systems), double-check backflow preventers may suffice. For the protection of sources supplying high hazard equipment and processes, reduced-pressure backflow preventers are required. Designers shall include provisions for drainage of the discharge from these devices; refer to Tables 9-1 and 9-2.

TABLE 9-1

POTENTIAL BACKFLOW PREVENTER DISCHARGE RATES

Assembly Pipe Size mm (inch)	Discharge L/s (GPM) at 420 kPa (60 PSI)		Discharge L/s (GPM) at 1050 kPa (150 PSI)	
19- 32 (3/4-1 1/4)	4.7	(75)	8.8	(140)
38- 50 (1 ½-2)	10.7	(170)	17.6	(280)
63- 75 (2 ½-3)	15.8	(250)	25.2	(400)
100-150 (4-6)	31.6	(500)	53.6	(850)
200-250 (8-10)	33.1	(525)	56.2	(890)

TABLE 9-2

FLOOR DRAIN FLOW RATES

Drain Size mm (inch)	Flow Rate* L/s (GPM)
100 (4)	5.6 (88)
150 (6)	16.8 (264)
200 (8)	36.3 (575)
250 (10)	66.3 (1050)
300 (12)	107.3 (1700)

* Flow rates for a floor drain with slotted cover and 3 mm (1/8 inch) drain pipe slope.

9.2.4 Water Treatment. A water chemistry analysis reporting, as a minimum, the calcium and magnesium concentrations and the water hardness shall be used as the basis for determining the potable water treatment design scope. Water treatment equipment packages requiring regeneration of media or components shall include multiple units as required to permit routine maintenance. Water treatment technologies for the control of water borne pathogens are discussed at 9.2.6 below.

9.2.4.1 Scale Control. Water softening will generally be required when the water supply to the facility has a hardness of 170 mg/L (10 gr/gal) or more. The softening system should be designed to deliver water with a hardness between 50 mg/L (3 gr/gal) and 85 mg/L (5 gr/gal); designer shall determine if any specialized equipment used in the MTF may require more stringent requirements. Dental facilities' water hardness shall not exceed 85 mg/L.

9.2.4.2 High Purity Water Systems. Water purification is the process by which contaminants or impurities, which affect undesirably the performance of specific equipment, or the outcome of medical and laboratory tests, are removed from the water. Water purification systems include reverse osmosis, deionization, ultrafiltration, and UV sterilization. Type I and Type III reagent grade water, as specified in ASTM D 1193 (reference 9g), are used in various applications such as for medicine preparation processes in pharmacies, in distillation units, for designated laboratory outlets, and in selected equipment for Renal Dialysis, Glassware Washing, Central Sterile Supply, and other medical and laboratory functions. Their use shall be coordinated with the Using Agency and the Government Design Agent. The designer shall consider local and central treatment options, and treatment system combinations, best meeting the User's needs and overall life cycle cost. Refer to the Heating, Ventilating, and Air Conditioning Section for make-up water treatment design guidance for steam systems.

9.2.5 Legionella Control. The relative danger that legionellae pose in any given MTF is a function of "system" factors which promote or discourage colonization (as discussed below and in references 9d, 9e, 9f), of the relative vulnerability of the patient population, and even of such factors as climate and ground water temperature. The presence of aerosol generating sources such as showers and whirlpool baths increase the risk of legionella infection. More seriously ill patients, particularly those who are immunocompromised by medical condition or treatment, are more vulnerable to legionella infection than the general population. In addition to potential contamination danger from hot water systems, cold water systems pose the risk of supporting legionella colonization if the piping systems are subjected to heat sources. The

temperature of cold water systems may be elevated into ranges more conducive to legionella colonization by ground temperatures, piping located in attics, ceiling spaces, equipment rooms, crawlspaces, or other unconditioned spaces, or by being located adjacent to hot water or steam piping. All of these risk factors should be taken into consideration when designing the domestic water system to help determine what special measures, if any, are called for to help control legionella.

9.2.5.1 Scale, Sediment, and Biofilm. Scale, sediment, and biofilm are contaminants that support Legionella bacteria colonization. The extent to which these support colonization is a function of factors including potable water service quality (including the presence of living aquatic amoebae such as are found in biofilms), system operating temperatures, and pipe material. Standard control technologies for scale and sediment deposits normally minimize the contribution of these factors to legionella colonization. Biofilms are resistant to some treatments. For addition and alteration projects, designers must be aware of the potential presence of established biofilms, sediments, and scale. Exercise caution in reusing existing piping system components without an analysis of the existing conditions. It may be contributing to Legionella colonization and subsequently, may lead to contamination of new service.

9.2.5.2 Control/Treatment Technologies. New designs should consider incorporation into the water supply system design one of the treatment methods or technologies recognized as efficacious in legionella control, some of which include the following:

(a) Chlorine Injection. This is a long established water treatment method and continues to be used. Many hospitals will maintain a 1-2 mg/L free residual chlorine at the tap. Although this is in accordance with CDC recommended treatments (reference 9d), there are several concerns with using chlorine long term:

- legionella bacteria are more tolerant of chlorine than other bacteria.
- accelerated corrosion of plumbing systems by the continuous injection of chlorine.
- carcinogenic trihalomethane production above the recommended maximum levels if free residual chlorine increases beyond the recommended 1-2 mg/L at the tap (future restrictions are being considered by the Environmental Protection Agency),
- reduced efficacy at elevated water pH levels.
- potential handling and storage hazards.

(b) Monochloramine Treatment. Monochloromine, which is a combination of (free) chlorine with other elements or compounds with, such as ammonia, eliminates some of the disadvantages associated with chlorine, e.g. it lowers the concentrations of possible carcinogenic disinfectant by-products, and may be more efficacious against legionella. Monochloramine demonstrates prolonged disinfectant properties, and the treatment method has been in use for many years. Recent research data from one state authority indicated that hospitals using monochloramines were culture-negative with no nosocomial legionellosis cases, whereas hospitals using free chlorine for disinfection had legionella bacteria in their water systems.

(c) Chlorine Dioxide Treatment. This technology has advantageous characteristics in that it is not corrosive, does not produce carcinogenic by-products, and maintains a relatively good efficacy level over a broad pH range. However chlorine dioxide is

required to be generated on site and may be explosive, thereby raising – handling and storage concerns.

(d) Copper-Silver Ionization. Some successes have been reported in reducing Legionella concentrations in buildings treated by this method, but there remains a question with the long-term performance. The equipment costs, as well as installation and maintenance costs, are relatively low. Ionization process by-products are not toxic and the process provides a residual effect. The optimum efficacy level varies with each individual potable water distribution system, and copper-silver concentration limits set by water regulations may limit ionization efficacy. Elevated pH levels will adversely effect efficacy, and undesirable copper and silver deposits may form at the bottom of hot water generator and storage tanks.

(e) Alternative Technologies. Alternative technologies include ultraviolet light and ozone. Additional data regarding the efficacy of these treatments are required. Consideration for incorporating these or other technologies shall be coordinated with the User's Design Agent.

9.2.5.3 Reducing Legionella Potential in Existing Facilities. High velocity water flushing may be to some degree effective to purge excessive scale and sediment from existing piping or equipment. Additional measures for reducing legionella colonization potential include cleaning or replacement of hot-water storage tanks, hot water generators, faucets, and showerheads. Piping disinfection may be accomplished via hyperchlorination at levels of up to 10 mg/L of free residual chlorine, or by thermal shock (hot water flushing) using water heated to a temperature of 65 degrees C (150 degrees F) or more for a duration of at least 5 minutes.

9.2.5.4 Design Considerations. Treatment systems for legionella control shall be sized on the total potable water demand – both cold and hot. Treatment shall be applied to the water service main. Designs should incorporate the following practices to minimize the potential for legionella colonization:

(a) Whenever practicable, specify pipe, equipment, and fixture components having direct water contact to be of materials which inhibit bacteria colonization, such as copper. For inpatient MTF's, avoid materials that support colonization, such as natural rubbers and some plastics, whenever practical.

(b) Design distribution mains to maintain balanced flow throughout. Piping runs should be as short as practicable. Avoid creating piping "zones" which experience infrequent use, and therefore stagnation. As practicable, route mains close to fixtures to minimize the lengths of branch piping runs. Avoid creating stagnant piping sections, e.g. dead legs. Do not locate cold water piping near hot water piping or other heat sources.

(c) Locate pressure balancing and thermostatic mixing anti-scald valves as close as practicable to the fixture discharge. The maximum pipe run should be 2 meters (6 feet).

(d) Piping between fixture shutoff and discharge should be self-draining where possible.

(e) Use care to properly select the operating head of the recirculation pump(s), taking into consideration system head requirements, including the pressure drop of thermostatic mixing valves.

(f) Consider instantaneous hot water generators where feasible, and when on-site storage is not required by other criteria, to avoid stagnant storage conditions.

(g) Water storage of holding tanks, both cold and hot, shall be designed to have continuous flow with maximum practical velocity. They shall not be piped as branched components with discharge line shutoff valves closed. Storage tank capacity shall be adequate for the application, but not oversized. The capacity sizing shall factor in the current healthcare procedures such as increased outpatient medical functions reducing the load profiles and hot water recovery demand.

9.2.6 Domestic Hot Water Systems.

9.2.6.1 Hot Water Demand. The demand load can be calculated using several different methods, examples of which are contained in ASHRAE and American Society of Plumbing Engineers (ASPE) handbooks (references 9h or 9i). The preferred method for calculating hot water demand for an MTF is the per-fixture method. This method provides a means to account for various uses within each facility, and permits the tabulation of the hot water load using a specified demand for each fixture. Summing individual fixture demands, the total demand is utilized to size the heater recovery rate and storage size. Table 9-3 provides a list of representative fixtures taken from MIL-STD-1691 (reference 9j) and their demands based on data provided in ASHRAE and ASPE handbooks (references 9h and 9i). For any fixture not shown, the designer shall determine the demand rate based upon experience, standard practice, and available Using Agency input. An example of system sizing is given below:

Example 1: Determine the heater and storage tank size for a medical clinic with the following fixture schedule:

12 Clinic Sinks	X	15.0 L/h	(4 gph)	=	180.0 L/h	(48 gph)
1 Plaster Sink	X	38.0 L/h	(10 gph)	=	38.0 L/h	(10 gph)
8 Public Lavatories	X	23.0 L/h	(6 gph)	=	184.0 L/h	(48 gph)
12 Clinic Lavatories	X	30.0 L/h	(8 gph)	=	360.0 L/h	(96 gph)
2 Mop Service Basins	X	76.0 L/h	(20 gph)	=	152.0 L/h	(40 gph)
1 Arm Whirlpool Bath	X	130.0 L/h	(35 gph)	=	130.0 L/h	(35 gph)
1 Leg Whirlpool Bath	X	380.0 L/h	(100 gph)	=	380.0 L/h	(100 gph)
1 Foot Whirlpool Bath	X	57.0 L/h	(15 gph)	=	57.0 L/h	(15 gph)
1 X-ray Film Processor	X	57.0 L/h	(15 gph)	=	57.0 L/h	(15 gph)
Possible Maximum Demand					1538.0 L/h	(407 gph)

Using the Demand Factor of 0.40 yields

Probable Maximum Demand = *Possible* Maximum Demand X Demand Factor
Recovery Rate = 1543.6 L/h X 0.40 (407 gph X 0.40)
Heater or Coil Capacity = 617.4 L/h (162.8 gph)

The Storage Capacity Factor of 1.00 is then applied to this recovery rate or heater capacity to determine the

Storage Tank Capacity = Heater Capacity X Storage Capacity Factor
= 617.4 X 1.00 (162.8 X 1.00)
= 617.4 L (162.8 gal)

Explanation of Example 1:

- A Demand Factor is applied to the *Possible* Maximum Demand to calculate the *Probable* Maximum Demand. The *Probable M*aximum Demand is the rate at which the heater shall generate hot water, or the recovery rate.

- The Probable Maximum Demand is factored by the Storage Capacity Factor to determine the Storage Tank Capacity. The Storage Tank Capacity is the capacity required being available for use. Storage tanks are not considered to be 100% usable and thus, a usable storage tank factor shall be applied to the calculated storage tank capacity; the percent capacity considered usable for most tanks is 70, thereby resulting is a 1.43 usable storage tank factor. The usable storage tank factor for systems utilizing instantaneous generators or multiple tank arrangements shall be coordinated with the Design Agent.

Additional Note: The fixture-unit method is adequate for typical usage. Expanded usage for food service, non-standard fixtures, or abnormal usage patterns (extreme low or high demand peaks or erratic peak duration and occurrence) shall be factored into the sizing calculations. For example, food-service fixture demand factors need to be adjusted if disposable service ware is used. Concentrated patient treatment for sick call, or other instance of high-peak usage, is another example of fixture hot water demand adjustment.

The Demand Factor and Storage Capacity Factor are listed in References 9h and 9i for given building types, which include a hospital but not medical clinic, dental clinic, nor laboratory. A Demand Factor of 0.40 and Storage Capacity Factor of 1.00 are considered representative for a clinic upon review of the factors for the building types shown. Factors for MTF’s with laboratory space greater than 10% of the total facility space shall be coordinated with the Design Agent.

TABLE 9-3

HOT WATER DEMAND per FIXTURE for MTF's

FIXTURE	L/H (GPH)	HW SFU
Sink, Clinic	15 (4)	3
Sink, Plaster	38 (10)	3
Sink, Service (General)	76 (20)	3
Lavatory, Public (General)	23 (6)	1½
Lavatory, Patient (Private)	8 (2)	1
Lavatory, Clinic	30 (8)	3
Basin, Mop Service	76 (20)	3
Shower, Staff or Patient Group	284 (75)	3
Shower, Patient (Private)	114 (30)	2
Shower, Hydrotherapeutic	1520 (400)	11
Bathtub	76 (20)	3
Bath, Whirlpool, Arm	130 (35)	3
Bath, Whirlpool, Arm/Foot/Knee	57 (15)	3
Bath, Whirlpool, Leg	380 (100)	7
Bath, Body Hydrotherapy (Hubbard)	2270 (600)	17
Bath, Sitz	114 (30)	3
Processor, X-ray	57 (15)	3

9.2.6.2 Hot Water Design Temperature. Domestic hot water shall be generated and stored at 60 degrees C (140 degrees F) minimum. It shall be tempered with a thermostatic mixing valve at the hot water generator discharge to permit distribution at a temperature range between 43 and 52 degrees C (110-126 degrees F). The maximum hot water temperature distribution design setpoint shall be 43 degrees C (110 degrees F). However, provide the capability to increase system temperature to 52 degrees C (126 degrees F) to permit an MTF the option to increase the temperature if so recommended by the Infection Control Officer. It is extremely important to note that at this temperature the exposure time for a first-degree burn is approximately 45 seconds. This is considered an adequate period for a fully aware adult to remove the exposed body area from the stream of a sink or lavatory, thereby maintaining a relatively safe condition at these fixtures without the requirement for an anti-scald valve. Infants, persons desensitized by medical condition or treatment, or those with severely limited motor capabilities, may be endangered by water at this temperature. Anti-scald valves shall be provided as close as possible to the taps of "whole-body" fixtures such as showers, bathtubs, and hydrotherapy baths. Hot water recirculation systems shall be designed to limit system temperature drop to 3 degrees C (5.5 degrees F) or less. Maximum hot water temperatures for other applications shall not exceed the following:

(a) Supply and Utility Areas. Central sterile supply, soiled utility rooms equipped with bedpan washers, cart wash areas, and special pathological wash areas shall be provided with 60 degrees C (140 degrees F) hot water.

(b) Kitchen Areas. The temperature normally required in dietary areas is the same as that distributed to standard hand washing and bathing plumbing fixtures. Dishwashing (automatic equipment) and pot washing normally require 82 degrees C (180 degrees F). Booster heaters shall be provided to obtain this temperature.

(c) All Other. All other domestic hot water applications shall be provided with a hot water temperature the same as is distributed to standard hand washing and bathing fixtures.

9.2.6.3 Hot Water System Temperature Maintenance. In most MTF's, a means of controlling system heat loss (and therefore temperature decrease) will be required to maintain delivery temperatures within acceptable tolerances. Designs for recirculating hot water systems shall include provisions for isolating and balancing the system. Heat tape systems may be utilized if cost justified, but are considered less desirable due to reported system malfunctions and difficulty in locating the malfunction point.

9.2.7 Plumbing Fixtures and Other Equipment. Plumbing fixtures should conform generally to American Society of Mechanical Engineers International, ASME standards series A112 (reference 9k) or International Association of Plumbing and Mechanical Officials, IAMPO standards series Z124 (reference 9l). For uniformity, all fixtures shall be identified by the Joint Schedule Number (JSN) provided in MIL-STD-1691 (reference 9j). Quantities of fixtures shall be in accordance with the Tri-Service Management Activity/Defense Medical Facilities Office (TMA/DMFO) Program For Design (PFD).

9.2.7.1 Handicapped Fixtures. Provide handicapped fixtures in accordance with the requirements of the Accessibility Provisions for the Handicapped Section of this document and the TMA/DMFO PFD.

9.2.7.2 Drinking Water Coolers. Locate public drinking water coolers convenient to each public waiting room and elsewhere as directed by the using Military Department. The standard rating and performance shall conform to ARI Standard 1010 (reference 9m). Refer to the Accessibility Section of this document for handicapped requirements.

9.2.7.3 Emergency Shower/Eye Wash Fixtures. In accordance with the American National Standards Institute (ANSI) Standard Z358.1 (reference 9n), the water discharged from the fixtures shall be between 15 – 35 degrees C (60 – 95 degrees F). The purpose is to ensure users are not subjected to extremely cold or hot water temperatures. If a given MTF water service supply temperature annual profile can be shown to be in the specified range, then the purpose is satisfied without the need for a tempering means. Typical tempering means include thermostatic mixing valve, instantaneous water heater, and heat tape. Some means do not require a hot water supply and can be considered for remote applications where only cold water service is available.

9.2.7.3 Water Usage Conservation. As of July 1992, the National Energy Policy Act (EPACT) has specified maximum consumption requirements for water closets, urinals, faucets and shower heads (for example, the water closet standard was lowered from 13.2 liters (3.5 gallons) per flush to 6.1 liters (1.6 gallons). Low-flow fixtures shall be specified for all projects.

9.3 Sanitary Drainage System. The MTF sanitary waste system shall be connected to an approved existing sewer system, either government or private as appropriate. If an existing sewage disposal system is not available, an approved alternative system shall be provided. For example, a holding tank may be acceptable for remote locations, for temporary service while awaiting the installation or retrofit of an approved sewage disposal system, or a backup such as for hardened or essential facilities. Any alternative to an approved central sanitary system shall be coordinated with the Installation's local approving authority. When connected to a local public system, code requirements in excess of the NSPC or IPC (references 9a and 9b) imposed by the local regulatory agencies shall be considered in the design. The system shall be designed to avoid excessive back pressure and aspiration

effects. Adequate cleanouts shall be provided to permit access to all sections of the waste drainage system. The cleanouts shall be located to avoid or minimize disruption of medical functions. If a facility sanitary waste requires lifting or pumping, provide duplex pumping equipment and a backflow preventing check valve. This equipment shall be connected to the alternative power source if one exists, or is included in the project scope.

9.3.1 Protection of Special Fixtures and Equipment. Fixtures and equipment used for sterilization, and food preparation, processing, or storage, shall be protected from contamination by backflow of waste. An indirect waste line, such as an air break or physical disconnection (open drain) at the associated waste outlet, shall be incorporated into the system design. These provisions also apply to equipment that cannot be easily cleaned. Included are sterilizers, glass washers, refrigerators, kitchen equipment, film X-ray processors, dental lab equipment (e.g. boilout assembly tanks), and vacuum system separator tanks.

9.3.2 Special Drainage Equipment. Interceptors may be provided when precious materials or heavy metals, such as silver and barium, are sediment in the waste drainage from such spaces as a Cast Room, a Prosthodontics Laboratory, barium procedure areas, film X-ray processing, and spaces employing blood analyzers. Interceptors for barium waste shall be aluminum. Flush rim floor drains shall be provided in Autopsy. Garbage grinding disposers shall be provided in Kitchens on dishwashers, pot and pan sinks, and other sinks as designated. Grease traps shall be provided with grease-producing kitchen equipment including prewash sinks, pot washers or sinks, and floor drains serving kettles. Separators shall be provided in uses where petroleum products are subject to dripping or spills, such as ambulance garages and mechanical equipment rooms.

9.3.3 Special Purpose Waste Lines. Separate waste lines shall be provided for acid waste and radioactive waste from laboratories, darkrooms and nuclear medicine treatment rooms, when justified by the quantities and/or concentration of reagent expected to be introduced. Acid-resistant waste piping will be utilized for such applications and, if required, will pass through a neutralizing or dilution tank before combining with building waste. If large quantities of acid or strong base solutions are to be discharged into the waste system, neutralization will be required. There are various radioactive materials to be found in an MTF. The particular radioactive waste for a given facility shall be identified. The appropriate prescribed manner of disposal in accordance with federal and local safety standards shall be incorporated into the design.

9.3.4 General-purpose Floor Drains. General floor drains shall be considered for rooms in which water-using plumbing fixtures or equipment are located. These include physical therapy rooms which are equipped with hydrotherapy equipment, central sterile areas for sterilizers and sanitizing washers, food service areas, wash-down and housekeeping spaces, and mechanical equipment rooms which contain water-using equipment. Provision of floor drains in toilets shall be at the discretion of the using Military Department. Floor drains are normally not required at emergency shower locations.

9.3.5 Trap Priming. The designer shall consider the need for trap priming for all floor drains, particularly those in occupied spaces required for infrequent leakage. A non-primed trap is a source of offensive odors and provides a means of access into the space for vermin and insects. When utilized, automatic primers shall incorporate a

backflow prevention feature. Other means of trap prime maintenance, such as using alternative sealing fluids (e.g. glycerin), are not permitted.

9.3.6 Retrofit/Alteration Considerations. The replacement of older existing fixtures with lower-flow fixtures will alter system performance. Smaller diameter pipe or increased slope may be necessary alterations.

9.3.7 Elevator Pit Sumps. Elevator pits shall be provided with a sump, which shall be either pumped or drained by gravity. Pumped designs shall deliver fluids to an indirect connection to the sanitary or storm drainage systems, such as a floor drain. The sump discharge line shall include a check valve to prevent back flow of fluid into the sump. If permitted by the local jurisdiction, a direct connection to the storm drainage system may be considered. Designers should also determine from the base engineering office or local jurisdiction if an oil interceptor is required. No other drains or sump discharges shall be connected to the elevator pit drain or sump. This equipment shall be connected to the alternative power source if one exists or is included in the project scope.

9.3.8 Mercury Control. Facilities containing operations which generate mercury wastes in the free or leachable (e.g. dental filling amalgams – refer to 9.6.17.1) state which are intended to be disposed to the sanitary waste system, shall consider separation provisions in accordance with federal, state or local requirements. The separation provision shall be incorporated as close to the source point as feasible. For mercury generating operations which do not require a separation provision initially, provide a 0.2 square meter (2 square foot) floor space with 0.67 meter (2 foot) clearance all around to accommodate a retrofit installation.

9.4 Storm Water Disposal. Provide drainage and disposal of storm water, direct or from runoff, from roofs and paved areas. The means of disposal shall preferably be to an existing storm sewer. If an existing storm sewer of sufficient capacity is unavailable, alternative means of disposal, including such options as ponds, basins, or dry wells, shall be considered. Storm water disposal shall be consistent with the Installation's storm water management plan.

9.4.1 Prohibited Discharge. Storm water shall not be discharged into sanitary sewers, unless it is rated as a combination system and no alternative cost-effective means is available. When storm water is discharged into a combination system, the connection at the point of combining with the sanitary waste shall include a trap.

9.4.2 Sizing. Sizing of the storm water drainage system shall be based on the guidance and precipitation rates shown in the NSPC or the IPC (references 9a and 9b). When approved by the Design Agent, local storm data may be utilized if based on U.S. Weather Bureau specified sampling methods.

9.5 Fuel Gas Service. Applications for fuel gas utilization in MTF’s include fuel source for space heating, domestic hot water generation, cooking, generation of steam for humidification and sterilization, and as a point-of-use heat or flame source to support medical and laboratory functions. The gas service for medical and laboratory functions is discussed in the Medical Gas Systems portion of this Section. Fuel gas system design, including liquified petroleum gas systems, shall be in accordance with NFPA 54, 58, and 59A (references 9o, 9p and 9q) as applicable.

9.6 Medical Gas Systems. Medical gas systems include: compressed air for medical and dental patient and laboratory use; vacuum for medical and dental patient use, laboratory dust collection, waste anesthesia gas disposal; and gases for patient, laboratory, and equipment use. See Table 9-4 for general information. Medical gas systems shall be designed to be safe, reliable, and maintainable.

TABLE 9-4
MEDICAL GAS SYSTEMS[1]

Compressed Air	Appendix A Abbreviation	Nominal Description
Medical Compressed Air	MCA	345 kPa (50 psig)
Dental Compressed Air	DCA	620 kPa (90 psig)
Laboratory Air	LA	210 kPa (30 psig)
Process Air	PA	830 kPa (120 psig)
Vacuum		
Medical Vacuum	MV	65 kPa (19 in-Hg)
Dental High Vacuum	DHV	65 kPa (19 in-Hg)
Dental Low Vacuum	DLV	27 kPa (8 in-Hg)
Laboratory Dust Evacuation	LDE	10 kPa (3 in-Hg)
Waste Anesthesia Gas Disposal	WAGD	21 kPa (6 in-Hg)[2]
Gases		
Oxygen	OX	345 kPa (50 psig)
Nitrous Oxide	NO	345 kPa (50 psig)
Nitrogen	NI	1105 kPa (160 psig)

1. Other medical gas systems included in this Section but not in Appendix A:
   Surgical Handpiece Drive Air (SHDA)
   Ethylene Oxide (ETO)
   Gas (natural or propane) - flame or heat source

2. This is a minimum value; vacuum controlled by healthcare provider administering the anesthesia gas.

9.6.1 Systems for Medical Clinics. Centrally piped medical gas/air/vacuum systems are not normally required or authorized for outpatient medical treatment clinics. If attached to an existing facility having central systems, Designers shall consider the feasibility of extending service lines to the clinic if life cycle cost effective.

9.6.2 Dental Clinics. Centrally piped systems shall normally be provided for dental compressed air (DCA), high volume oral evacuation (DLV), high vacuum oral evacuation (DHV), high volume evacuation for laboratory dust use (LDE); dental laboratory air (LA), and surgical handpiece drive air (SHDA) as required to support the planned functions. A separate system for Waste Anesthesia Gas Disposal (WAGD)may be required unless the Using Agency designates the DHV or DLV system for that purpose. Fuel gas (natural or propane) shall be provided as required to support prosthodontic and orthodontic laboratories and Dental Treatment Rooms (DTR's). For freestanding clinics with less than 5 chairs, selection of central system for gases as opposed to point-of-use systems shall be based upon life cycle cost considerations.

9.6.3 Medical Gas System Testing. Medical gas systems shall be installed and tested in accordance with NFPA 99 (reference 9r). Testing shall include, but not limited to, cross-connection, purity, pressure, and alarm testing. All testing and certification of medical gas systems should be done by an independent testing agency, not the equipment supplier or Contractor.

9.6.4 System Control Valves. All medical gas centrally piped systems shall be provided with shut-off valves and zone valve box assemblies in accordance with NFPA 99 (reference 9r). Additional shutoff valves shall be included as necessary to provide system section isolation for maintenance or alterations.

9.6.5 Alarm Systems. Medical gas alarm systems shall be provided for all central piped systems in accordance with NFPA 99 (reference 9r).

9.6.6 Gas System Sources (Storage). Gas system sources or storage provisions shall be designed in accordance with NFPA 99 (reference 9r). Flammable and nonflammable storage containers shall be stored in separate enclosures. Bulk oxygen storage design shall be in accordance with NFPA 50 (reference 9r).

9.6.6.1 Point-of-Use Sources. Point-of-use cylinders are defined as B, D, or E sizes. The Designer shall coordinate with the Using Service the provisions for point-of-use cylinder storage when their use is planned. Storage in the storage room for central system cylinder banks is permissible. The point-of-use cylinder volume shall be included in the total when determining the storage room ventilation requirements. Design shall incorporate Compressed Gas Association requirements of Pamphlet P-2 (reference 9t).

9.6.6.2 Alternative Compressed Air Sources. Alternative compressed air sources such as pneumatic control air or shop air compressors shall not be used as a source for medical compressed air, dental compressed air, laboratory air, process air, or surgical handpiece drive air.

9.6.7 Color Coding and Labeling. Labeling and color identification of piping shall be in accordance with NFPA 99 (reference 9r) and the CGA Pamphlet C-9 (reference 9u). System components shall also be labeled for identification to prevent tampering and inadvertent closing. In particular, shutoff valves and pressure gauges shall be labeled in accordance with NFPA 99 (reference 9r).

9.6.8 Medical Gas Systems Outlets. Appendix A contains guidance for allocation and location of medical services and outlets in the various spaces within an MTF. The number of outlets shown for each space and for each medical gas service corresponds to usage in a large, full-function medical facility, such as a medical center, comprehensive healthcare center, or hospital. The amount represents the *maximum* permissible number of outlets; the Using Service may specify less. The medical gas types shown for the given space are typically used; the Using Service need specify not all. Smaller facilities may not require this range or quantity of outlets. The Designer shall coordinate the gas types and outlet quantities with the Using Service. Additional outlets and gas types may be provided when justified by the Using Service to TMA/DMFO. All outlets shall comply with the latest edition of NFPA 99 (reference 9r) and the requirements of Compressed Gas Association Pamphlet V-5 (reference 9v).

9.6.8.1 Outlets for Non-Medical Function Use. The use of a central medical gas system to serve an outlet that indirectly supports the medical function such as in a laboratory may be justified. If so, the branch piping and outlets shall be in accordance with NFPA 99 (reference 9r). Non-medical uses are not permissible except for unique circumstances with documented waiver requests, coordinated with the Using Service and Design Agent, reviewed individually.

9.6.9 Emergency Power Source. Life-critical medical gas system equipment, requiring electrical power for generation, operation, or alarm, shall be connected to an emergency power source. At the discretion of the Design Agent, when requested by the Using Service, dental compressed air, vacuum, and medical gas systems serving anesthetizing treatment rooms in outpatient and dental treatment clinics may be connected to an emergency power source. Refer to the Electrical Section of this document for connection design guidance.

9.6.10 Medical Compressed Air (MCA). The MCA system shall be an independent central piped system consisting of two or more medical air compressors and a central receiver, all conforming to the requirements of NFPA 99 (reference 9r). It shall be used only for medical functions requiring breathable air to support respiration or for air-driven instruments that discharge into the pharynx. The MCA system shall not be used to satisfy any other compressed air requirements. The system design shall include automatic operation of the compressors, including alternating lead/lag status.

9.6.10.1 Air Quality Standards. The medical air compressor(s) shall be specifically designed and manufactured for this purpose. MCA quality shall be as defined in NFPA 99 (reference 9r). Intake air shall be direct from outdoors or another source of equal or better quality located in accordance with NFPA 99 (reference 9r). Designers are responsible to size and show routing of medical air intake piping. MCA shall be supplied at a minimum of 345 kPa (50 psig) at all outlets with a tolerance of +35 kPa (5 psig).

9.6.10.2 General Requirements. MCA shall be provided by two or more compressors with provisions for automatic, alternating, and simultaneous operation. The compressors shall be sized such that if any one compressor fails, the remaining compressor(s) shall provide 100% of maximum system demand. Provide an alarm to indicate compressor failure that annunciates at the master medical gas alarm panel. All system components downstream of the compressors shall be sized for 100% standard system demand and be duplexed. The receiver shall have an automatic drain feature specified, since it is required to be upstream of the dryers in accordance with NFPA 99.

9.6.10.3 Air Drying. System design shall include an air dryer of either the mechanical refrigeration or desiccant type. Designers shall closely coordinate with the Using Agency for each project, to determine whether operating conditions, facility maintenance capabilities, air dryness limitations, or other factors favor preference of one type over the other for the given application. Designers are responsible to consider the following:

(a) When mechanical refrigeration systems are specified, designers shall include specification of a cycling feature for all systems under 3.7 kW (5 horsepower (hp), to minimize the possibility of icing and moisture carry-over. Designers shall evaluate whether anticipated flow conditions will require the cycling feature for systems 3.7 kW (5 hp) and over.

(b) When desiccant systems are specified, designers shall consult the Using Agency on dryness limitations. Desiccant dryers are capable of drying the air to a dewpoint as low as –40 degrees C (-40 degrees F), which may be considered too low for some medical or dental applications. When required by the User, the design shall include specification of equipment accessories that will permit upward adjustment of air moisture to the required dewpoint.

(c) The relative advantages and disadvantages of mechanical refrigeration dryers and desiccant dryers generate questions. Good arguments may be made for in favor of either dryer type. Both systems can be successfully utilized in MTF's if project-specific conditions and User needs are taken into account and the equipment is properly specified. Additional general information of this topic is provided in Annex A at the end of this Section.

9.6.10.4 MCA Demand. System demand shall be calculated utilizing the peak flow and simultaneous use data in Table 9-5, as a minimum. The simultaneous use factors shall be used with judgement and modified to adapt to special conditions if required.

TABLE 9-5

MEDICAL COMPRESSED AIR SYSTEM DEMAND

Space/Equipment	Design Flow in L/s (SCFM) Per Unit	Per Room	Per Bed	Per Outlet	Usage Factor %
Anesthetizing Locations:					
Special Surgery & Cardio-Vascular			0.2(0.5)		100
Major Surgery & Orthopedic		0.2(0.5)			100
Minor Surgery		0.2(0.5)			75
Emergency Surgery		0.2(0.5)			25
Radiology		0.2(0.5)			10
Cardiac Catheterization		0.2(0.5)			10
Ventilators	1.7(3.5)				100
Delivery Room		0.2(0.5)			100
Acute Care Locations:					
Recovery Room/Surgical			0.9(2.0)		25
ICU/CCU			0.9(2.0)		50
Emergency Room			0.9(2.0)		10
Neonatal ICU			0.7(1.5)		75
Dialysis Unit			0.2(0.5)		10
Recovery Room/O.B.			0.9(2.0)		25
Subacute Care Locations:					
Nursery		0.2(0.5)			25
Patient Rooms		0.2(0.5)			10
Exam & Treatment	0.5(1.0)				10
Pre-Op Holding				0.7(1.5)	10
Respiratory Care	0.5(1.0)				50
Pulmonary Function Lab				0.5(1.0)	50
EEG & EKG				0.5(1.0)	50
Birthing & Labor/Delivery	0.5(1.0)				50
Other:					
Anesthesia Workroom		0.7(1.5)			10
Respirator Care Workroom	0.7(1.5)				10
Nursery Workroom		0.7(1.5)			10
Equipment Repair		0.7(1.5)		0.7(1.5)	10
Med. Laboratory				0.7(1.5)	25

NOTE: This is a generic listing that must be applied to the specific room names listed in Appendix A.

9.6.11 Dental Compressed Air (DCA). A central piped dental compressed air (DCA) system with two or more compressors and other components described herein shall be provided in accordance with NFPA 99 (reference 9r), Level 3 compressed air systems. DCA shall be used for drying applications during dental procedures and as a power or drive source for lifts, locks, and pneumatic dental instruments and equipment. DCA, unlike MCA, is not used for breathing or respiratory support of any kind and shall not be used to satisfy MCA requirements. Air that is normally used for dental laboratory restorative and fabrication techniques may be provided by the DCA system. Refer to 9.6.14, for handpiece drive air requirements.

9.6.11.1 Air Quality Standard. DCA quality shall be as defined in NFPA 99 (reference 9r), Level 3 compressed air systems. Intake air shall be direct from outdoors or of quality better than outside air. DCA shall be supplied to the outlets at a minimum pressure of 620 kPa (90 psig) with a tolerance of +35 kPa (5 psig).

9.6.11.2 DCA Components. DCA shall be provided by two or more equally sized compressors, with provisions for automatic, alternating, and simultaneous operation. Each compressor shall be sized such that if any one compressor fails, the remaining compressor(s) shall provide 65% of standard demand. Provide an alarm to indicate compressor failure that annunciates to the master medical gas alarm panel. All system components downstream of compressors shall be sized for maximum combined compressor output. In-line pressure regulators shall be provided when DCA and dental LA systems are served by a common compressor. Each laboratory supply main shall have a pressure regulator. Dryer type may be of either the mechanical refrigeration or desiccant type, according to project specific operational requirements and the User’s needs. Refer to 9.6.10.3 above and Annex A at the end of this Section for additional information.

9.6.11.3 DCA System Demand. The system shall be sized using the following criteria.

(a) Select a DTR Usage Factor:

Number of DTR's	DTR Usage Factor (DUF)
1 - 3	1.0
4 - 6	0.9
7 - 12	0.8
13 - 19	0.7
20 and up	0.6

(b) DTR Demand = No. of DTR's X 1.42 L/s X DUF

(c) Select a lab usage factor:

Number of Technicians	Lab Usage Factor (LUF)
1 - 5	0.6
6 - 10	0.5
11 - 19	0.4
20 and up	0.3

(d) Lab Demand =

No. of Technicians	X 0.472 L/s X LUF
+ No. of sand/shell blasters	X 1.888 L/s X LUF
+ No. of air chisels	X 1.415 L/s X LUF
+ No. of denture presses	X 0.472 L/s X LUF
+ No. of microblasters	X 2.831 L/s X LUF
+ No. of high speed handpieces	X 1.415 L/s X LUF

(e) Sterilization demand = No. of handpiece purge stations X 0.472 L/s.

(f) Standard demand =
DTR demand + Lab demand + Sterilization demand.

(g) Select the optimum compressor grouping:

COMPRESSOR GROUPING

Type	System Usage Factor (SUF)
Duplex	0.65
Triplex	0.33
Quadplex	0.25

(h) Compressor size = SUF X Standard demand

(i) The receiver shall be sized based on Table 9-6.

TABLE 9-6

RECEIVER SIZE

Number of DTR's	Liters (Gallons) per DTR
1 - 6	38 (10)
7 - 9	34 (9)
10 - 12	30 (8)
13 - 15	26 (7)
16 - 18	23 (6)
19 - 21	19 (5)
Over 21	15 (4)

9.6.12 Laboratory Air (LA). The medical or dental laboratory air (LA) system shall be a central piped system consisting of two or more compressors and a central receiver, all conforming to the requirements of NFPA 99 (reference 9r). Either LA system may be combined with the dental air system. The MA system shall not be used to satisfy LA requirements except for small laboratories dedicated to support the medical function.

9.6.12.1 Air Quality Standard. Air compressors used for LA shall be specifically designed and manufactured for this purpose. LA quality shall be in accordance with the dental compressed air (DCA) requirements defined in 9.6.11.1. Intake air shall be direct from outdoors or of quality better than outside air (e.g., prefiltered outdoor air or relieved return air). Locate intake in accordance with DCA's requirements as defined in HFPA 99 (reference 9r), Level 3. LA shall be supplied at a minimum of 210 kPa (30 psig) for dental laboratories and 345 kPa (50 psig) for medical laboratories, with a +35 kPa (5 psig) tolerance.

9.6.12.2 LA System Components. LA shall be provided by two equally sized compressors with provisions for automatic, alternate, and simultaneous operation. Each compressor shall be sized to provide 65% of maximum demand. Provide an alarm to indicate compressor failure that annunciates to the master medical gas alarm panel. All system components downstream of compressors shall be sized for maximum combined compressor output. A DCA compressed air generator package used to service a LA system shall be supplied by a dedicated main located just downstream of the final package component and inside the equipment room.

9.6.12.3 LA System Demand. The LA system flow demand shall be determined by the number of work stations and their function plus the requirements for laboratory equipment. The using Military Department shall provide this information. The designer in conjunction with the Design Agent shall establish the flow rates. Medical LA system flow rate demand shall be 0.5 L/s (1 cfm) per outlet. Dental LA system flow rate demand is determined by the sizing procedure shown in 9.6.11.3. The simultaneous use factors shall be as follows in Table 9-7:

TABLE 9-7

MEDICAL LABORATORY AIR SYSTEM DEMAND

No. of Outlets	Use Factor (%)	Minimum L/s (CFM)
1 - 2	100	
3 - 12	80	1.4 (3)
13 - 38	60	4.7 (10)
39 - 115	40	11.8 (25)
116 - 316	30	23.6 (50)
317 - 700	20	44.8 (95)

9.6.13 Process Air (PA). Process air (PA) may be a centrally piped system when warranted by the application, e.g. medical service column adjustment, shop operations, and door operators. The using Military Department in conjunction with the Design Agent will identify PA requirements. PA is not required to be oil free, but shall be suitable for the application.

9.6.13.1 Air Quality Standard. Air compressors used for PA shall be specifically designed and manufactured for this purpose. PA quality shall be in accordance with the requirements of the equipment serviced. Intake air shall be direct from outdoors or from some other non-contaminated source. PA supply pressure and tolerance shall be a function of the application and the serviced equipment manufacturer’s recommendation. Many applications shall be a minimum of 830 kPa (120 psig), with a tolerance of +35 kPa (5 psig) tolerance.

9.6.13.2 PA System Components. The number of compressors for a PA system shall be a function of the application – two or more for critical applications and one acceptable for non-critical. Coordinate the compressor arrangement with the Using Service’s Design Agent. Each compressor for critical applications shall be sized to provide 65% of the maximum demand if any one compressor fails. Provide an alarm to indicate compressor failure that annunciates to the master medical gas alarm panel. All system components downstream of compressors shall be sized for maximum combined compressor output.

9.6.13.3 PA System Demand. The number of workstations and their functions plus the requirement of any equipment shall determine the PA system flow demand. The using Service shall provide this information. The designer in conjunction with the Design Agent shall establish the flow rates.

9.6.14 Surgical Handpiece Drive Air (SHDA). SHDA may be used as a substitute for nitrogen to power pneumatic surgical handpieces used in dental procedures. SHDA is not used for breathing or respiratory support. SHDA must be a separate system from DCA and dental LA; however, DCA may be used as a first stage of compression.

9.6.14.1 SHDA Air Quality Standard. Air compressors used for SHDA shall be specifically designed and manufactured for the given application. SHDA quality shall be in accordance with the DCA requirements. Intake shall be direct from outdoors or of quality better than outside air. Locate intake in accordance with the NFPA 99 (reference 9r). SHDA shall be supplied to the outlets at 1035 kPa (150 psig). A minimum pressure of 1105 kPa (160 psig) shall be maintained at the receiver.

9.6.14.2 SHDA System Components. The system shall include one or more compressors with provisions for automatic, alternate, and simultaneous operation. Each compressor shall be sized to provide 65% of maximum demand if any one compressor fails. Provide an alarm to indicate compressor failure that annunciates to the master medical gas alarm panel.

9.6.14.3 SHDA System Demand. The network demand shall be determined according to the number of oral surgery DTR's in accordance with the information in Table 9-8.

TABLE 9-8

SHDA UTILIZATION FACTORS

# of Oral Surgery DTR's	Network Demand L/s (CFM)
1-2	2.8 (6)
3-4	5.7 (12)
5 and over	1.42 per DTR

The compressor(s) shall be of sufficient output capacity to provide full system recovery from minimum to maximum system pressure in 15 minutes or less.

9.6.15 Medical-Surgical Vacuum System (MV). The medical vacuum (MV) system shall be a centrally piped, dry vacuum system containing two or more continuous duty pumps with a central receiver. The system shall meet the requirements of NFPA 99 (reference 9r) and shall be sized so that if one pump fails, the remaining pump(s) can supply 100% of the total system demand. The system design shall include automatic operation of the vacuum pumps including alternating lead/lag status. Provide an alarm to indicate vacuum pump failure that annunciates to the master medical gas alarm panel.

9.6.15.1 Applications. The MV shall be used only for medical functions involving patient care, therapy, and diagnostic functions as described below. It may also serve DHV requirements for dental treatment rooms and oral surgeries, and small laboratories in patient care areas that function in direct support of medical functions. Analysis, research or teaching laboratory located within a medical treatment facility may also be served by the MV, provided that a separate system connection or main is provided at the vacuum receiver, with a shutoff valve and trap with a drain valve. A laboratory not supporting medical functions shall have a vacuum system separate from the MV.

9.6.15.2 Demand. Vacuum system pumps and piping shall be sized in accordance with NFPA 99 (reference 9r) "Recommended Vacuum Source Sizing" and "Recommended Minimum Pipe Sizing." Note to "round up" pipe sizes, especially those serving operating rooms including the risers and laterals. Ascertain the intended staff operational procedures to determine the need for an additional factor of safety. Indiscriminate opening of vacuum inlets for extended periods, whether in service or not, requires a factor increase in demand and pipe sizing. Also, the intended use of "Y-connectors" as a means of increasing available inlets is not recommended. A justified need for a vacuum inlet shall be accommodated with another wall inlet, not an Y-connector. Verify with the User's representative that the number of vacuum inlets proposed will support the planned medical function operation without the use of Y-connectors.

9.6.15.3 Performance. A minimum vacuum of 51 kPa (15 in-Hg) shall be maintained at the receiver. The operating range shall be 51 to 65 kPa (15 to 19 in-Hg). A minimum vacuum of 41 kPa (12 in-Hg) shall be maintained at the farthest inlet. System pressure drop shall be a maximum of 10 kPa (3 in-Hg) at the calculated demand flow rate. A flow rate of 1.4 L/s (3 scfm) per inlet, with no equipment attached, shall be measured while maintaining 41 kPa (12 in-Hg) vacuum at the farthest inlet. The 1.4 L/s (3 scfm) without equipment is equivalent to the recommended 0.7 L/s (1.5 scfm) with.

9.6.15.4 Slide Brackets. Vacuum bottle slide brackets shall be provided for all medical vacuum inlets. Vacuum bottles shall be used at all vacuum inlets to prevent liquids and solids from entering the piping network. Vacuum bottles shall be provided with an overflow shut-off device to prevent carry over of fluids or solids into the piping system. Brackets shall be positioned to provide proper clearance for flow meters and adapters and to eliminate conflict with electrical receptacles. Thus, it is recommended that the vacuum outlet be located at either end of a group of medical gas outlets, with the slide bracket to the outside, e.g. in a healthcare station head wall unit. If two vacuum inlets are required at a given station, locate one at each end of the outlet group with the slide brackets to the outside. It is critical to coordinate vacuum inlet and slide locations with the Architectural Designer and the User’s representative to avoid interference with other items without compromising the medical function.

9.6.15.5 Exhaust. Vacuum shall be exhausted in accordance with NFPA 99 (reference 9r).

9.6.16 Dental High Vacuum (DHV). A central DHV system may be supplied for areas in dental clinics where MV is required as specified in Appendix "A." This system is also a dry system with a central piped distribution system and receiver; no liquids or solids shall be transported in the distribution system. Individual separators shall be located in each applicable DTR. The system shall consist of two or more vacuum pumps and a central receiver. System shall be sized so that upon failure of one pump the remaining pump(s) shall maintain the minimum vacuum specified while providing 100% of the calculated demand. The system design shall include automatic operation of the vacuum pumps including alternating lead/lag status. Provide an alarm to indicate vacuum pump failure that annunciates to the master medical gas alarm panel. For dental clinics located in a hospital, the MV system may be used in lieu of a DHV system.

9.6.16.1 Performance. A minimum vacuum of 65 kPa (19 in-Hg) shall be maintained at the receiver. System pressure drop shall be such that the most remote inlet will have a minimum vacuum of 41 kPa (12 in-Hg) under peak demand conditions.

9.6.16.2 Demand. System demand shall be calculated based on 0.9 L/s (2 SCFM) for each DTR DHV inlet with the demand factors in Table 9-9:

TABLE 9-9

DHV DEMAND FACTORS

No. of DTR DHV Inlets	Use Factor
1 - 6	1.0
7 - 10	0.8
Over 10	0.6

9.6.17 Dental Low Vacuum (DLV). A central low vacuum, high volume oral evacuation system or DLV shall be installed in dental clinics to provide scavenging, collection, and disposal of liquids, solids, and aerosols from dental procedures. This is a wet system with liquids and solids transported through wetted piping from the collection point to one or more liquid/air separator tanks located upstream of two or more vacuum pumps. The tank serves as a collector for the fluids and solids and provides a means of automatic draining for them by being connected, indirectly, to the sanitary sewer. The tank draining system may include an automatic wash down feature for larger systems in an MTF having greater than 10 DTR's. The system shall meet the requirements of NFPA 99 (reference 9r) Level 3 vacuum systems. The vacuum pumps shall be sized so that when one pump is inoperable, the remaining pump(s) shall provide the above vacuum pressure and fluid flow for a minimum of 70% of the system demand. The system design shall include automatic operation of the vacuum pumps including alternating lead/lag status. Provide an alarm to indicate vacuum system fault (e.g. pump failure) that annunciates to the master medical gas alarm panel. Protocol shall include alarm initiation when a pump does not operate when called for and when a pump operates when not called for.

9.6.17.1 Components. The service inlet normally is floor mounted in a utility center at the dental chair, or wall mounted with a means of connection to clinical end items such as the high volume hose. The separator(s) shall receive all liquid, air, and solids upstream of vacuum pump(s). Liquids and solids shall be discharged from the separator(s), with piped gravity flow through an air gap into a trapped and vented receptor (e.g. a floor drain or sink, or standpipe receptor for small system suspended tank installations) connected to the sanitary waste system. Local codes may require the use of an amalgam separator between the separator tank and the sanitary waste system to control the discharge of mercury into it. Refer to 9.2.7.8 for additional guidance. Coordinate with the Installation or local regulatory agency when discharge is to a public sanitary system. For government operated systems, coordinate with the using Military Department or the Installation. The separator tank shall discharge a minimum of once during a 24-hour interval for a one-tank system, when a high liquid level sensor activates for a two-tank system, or multiple daily discharges as recommended by the manufacturer. Separator overflow protection shall be included to protect during periods of abnormal usage or when the automatic discharge malfunctions.

9.6.17.2 Performance. The system operating range shall be 21 to 27 kPa (6 to 8 in-Hg). A minimum vacuum of 21 kPa (6 in-Hg) shall be maintained at the farthest inlet. System pressure drop shall be a maximum of 3 kPa (1 in-Hg) at the calculated demand flow rate. A flow rate of 3.3 L/s (7 scfm) per inlet shall be measured while maintaining 21 kPa (6 in-Hg) at the farthest inlet.

9.6.17.3 Demand. The system demand shall be calculated based on 3.3 L/s (7 scfm) per inlet-nozzle orifice. To offset piping and component losses, increase the demand flow rate by the appropriate factor from Table 9-10.

TABLE 9-10

DEMAND FLOW RATE INCREASE

Number of Inlets	Increase (%)
1-20	10
21-40	15
41 and above	20

The demand usage factor is normally 100 percent. Verify the specific usage factor with the User and the Design Agent.

9.6.17.4 Separator Tank. The separator/collector tanks shall be sized according to Table 9-11.

TABLE 9-11

SEPARATOR TANK SIZING

	Separator Tanks	
Number of DTR's	Quantity	Minimum Size L (Gal)
1- 6	1	76 (20)
7-10	1	152 (40)
11-20	1	304 (80)
21-30	2	152 (40)
31 and above	2	10.5 (2.75) per DTR

An alternative separator tank-sizing factor is 10.45 liters (2.75 gallons) per DTR. The use of multiple tanks can be considered for the lower number of DTR’s if continuous operation is necessary. Tank drainage piping shall slope from the tank discharge point down to the discharge point at the floor drain or standpipe receptor.

9.6.17.5 Equipment Location. The DLV equipment shall be located on or below the DTR floor level. The separator tank location shall be near the pump at the same level or directly above or below whenever feasible. When space constraints are unavoidable, after coordination with the Design Agent and using Service, or other circumstances dictate, vacuum pumps may be located above and remote from the separator tank. The pipe shall then be sized to maintain system pressure loss within the maximum limit. The tank drain valve discharge shall be a minimum 150 millimeter (0.5 foot) above the floor to accommodate the pipe slope, drain line turn down and the indirect connection air gap to the sanitary drainage system receptor. The sanitary waste centerline of pipe shall be a minimum 0.34 meter (1 foot) below the floor to accommodate the floor drain trap. The equipment room shall be located as near the DTR’s as possible to minimize distribution piping bends and pipe length. Equipment placement in the mechanical room shall be arranged to provide the most direct connection to the distribution piping, the sanitary waste line, and the exhaust discharge point, in that order.

9.6.17.6 Piping Distribution. The piping run from the dental utility center, located on or recessed into the floor, should continuously slope back to the vacuum source equipment with limited rise, to facilitate transportation of fluids and particulate. Minimum required slope is 0.65 centimeter per 3.0 meter (1/4 inch per 10 feet). Vacuum shall be increased from the level specified in 9.6.17.2 at the rate of 1 in-Hg for every 1.1 foot of rise. Distribution system piping encased in the slab or buried below the slab shall be a minimum 50 millimeter (2 inch) in diameter. Where maintenance access is required, piping shall be

installed in accessible locations in covered trenches, tunnels, or crawlspaces. Provide cleanout fittings at every change of direction greater than 45 degrees. Minimum access space shall be two feet minimum to within two feet of the cleanout and a minimum 0.5 foot from this point to the cleanout. Specify DWV fittings to facilitate movement of solids. Enlarging the pipe size shall be considered depending upon availability of the DWV fittings and relative pipe costs. When overhead pipe routing cannot be practicably avoided, provide cleanout fittings at the base of all risers and observe the following requirements:

a. Minimize lift height by locating overhead horizontal pipe run as close to floor as possible.
b. Vertical pipe run from inlet to overhead pipe shall be a minimum 40-millimeter (1½-inch) diameter.
c. Overhead pipe shall be not less than 40 millimeter (1½ inch) minimum in diameter.
d. The vertical pipe shall “tee” into the top of the overhead branch main.
e. The available vacuum level to satisfy performance requirements stated in 9.6.17.2 shall be based on a reduction of the pump-generated vacuum at the rate of 3 kPa (1 in-Hg) for each 0.33 meter (1.1 foot) rise.

9.6.17.7 Exhaust. The exhaust pipe material and size, including the connection to the equipment discharge point, shall be in accordance with manufacturer’s recommendation. The number of bends and total length shall be minimized. The exhaust piping shall be a dedicated run from the equipment connection to the discharge point outside the MTF. It shall not be connected to any other piping, such as a plumbing vent line. The exhaust line shall be protected from backflow of air or liquids by detailing an appropriate discharge arrangement, such as a gooseneck or shroud with screen with a check valve, or using a flapper valve approved by the manufacturer. The discharge point shall be separated a minimum of 10 meters from the dental or medical compressed air system intakes and any HVAC system outdoor air intake(s).

9.6.18 Central Dental High-Volume Laboratory Dust Evacuation (LDE). The LDE system shall scavenge and centrally separate, filter, and collect material trimmings, grinding debris (toxic and nontoxic), and particulates from polishing and finishing operations in the dental laboratory. Point of use dust collection may be provided for some operations per using Military Department requirements.

9.6.18.1 System Components. The LDE system for dental laboratories shall consist primarily of one belt-driven vacuum pump complete with a preset, field-adjustable ingestion valve, exhaust silencer, and a central cyclonic separator with a filter bag system.

9.6.18.2 Performance. A vacuum of 10 kPa (3 in-Hg) shall be maintained at the separator. The vacuum at the farthest inlet shall be a minimum of 4.2 kPa (1.25 in-Hg). A flow rate of 28 L/s (60 scfm) per technician work station inlet and 71 L/s (150 scfm) per equipment item inlet shall be measured while maintaining the 10 kPa (3 in-Hg) at the separator. Verify the equipment requirements with the using Military Department.

9.6.18.3 Demand. The system demand shall be calculated based on the inlet flow rate requirement. Apply the usage factor values shown in Table 9-12 for the given number of inlets.

TABLE 9-12

LDE SYSTEM UTILIZATION FACTORS

Lab Size (# of inlets)	Usage Factor (Percent)	Separator Filter m^2 (Sq. Ft.)
1 to 4	100	5.6 (60)
5 to 10	80	11.2 (120)
11 to 15	70	14.9 (160)
16 to 24	60	20.5 (220)

9.6.19 Waste Anesthesia Gas Disposal (WAGD). The WAGD system shall be a centrally piped, dry vacuum system containing two or more continuous duty pumps with a central receiver. It shall meet the requirements of NFPA 99 (reference 9r) and be sized so that if one pump fails, the remaining pump(s) can supply 100% of the total system demand. The system design shall include automatic operation of the vacuum pumps including alternating lead/lag status. Provide an alarm to indicate vacuum pump failure that annunciates to the master medical gas alarm panel.

9.6.19.1 Applications. Disposal of waste anesthesia gas shall be incorporated into the MTF design. Several means do exist, but vacuum induced evacuation has demonstrated minimal interference with the medical of dental functions. A MV, DHV, or DLV system may be used to scavenge, collect, and dispose the waste anesthesia gas. Otherwise, a dedicated vacuum system is used; it shall be designed in accordance with NFPA 99 (reference 9r). Inlets shall be provided in anesthesia locations. Verify that the system vacuum pump is suitable for the high oxygen and nitrous oxide exhaust content associated with anesthetizing procedures.

9.6.19.2 Demand and Performance. Designers shall coordinate with the Using Agency the vacuum demand level and flow requirements.

9.6.19.6 Exhaust. Vacuum shall be exhausted in accordance with NFPA 99 (reference 9r).

9.6.20 Oxygen (OX). Oxygen (OX) is used in the gaseous state to sustain life through direct delivery to the patient. Oxygen can be stored as a gas in cylinders or as a liquid in bulk tanks. It is classified as a nonflammable gas; however it can increase the range of flammability of other materials and gases when present in sufficient concentration. Its storage requires proper construction and ventilation, in accordance NFPA 99 and NFPA 50 (references 9r and 9s). Oxygen shall be supplied at a minimum of 345 kPa (50 psig) at all outlets with a tolerance of +35 kPa (5 psig). The oxygen system shall not be used to supply non-patient uses, including equipment in laboratories or medical equipment maintenance/repair shops. Separate point-of-use services shall be used for such non-patient applications.

9.6.20.1 Provision of Central Systems. When justified by the number of required outlets and frequency of use, central oxygen storage and distribution systems shall be provided, such as is typically the case with medical centers, hospitals, and large ambulatory care centers. Point-of-use (“roll-in”) cylinders should be utilized for clinical applications involving few oxygen outlets and infrequent utilization.

9.6.20.2 Emergency Connection. Provide an emergency oxygen supply connection on the building exterior when the oxygen supply system is located outside of the building. This connection shall be used as a temporary auxiliary source of supply. Valving and pressure control devices shall be in accordance with NFPA 99 (reference 9r).

9.6.20.3 System Demand. The piping system shall be designed to deliver 20 L/min (0.7 cfm) at the outlet, utilizing a 100% usage factor for outlets in critical areas and the factors in Table 9-13 for outlets in other areas. Historical usage data from replaced or similar MTF's may be used as a guideline when determining system demand instead of the method presented in 9.6.20.4. Refer to 9.6.20.5 below for additional design considerations for determining the required capacity of liquid bulk tanks.

TABLE 9-13

OXYGEN SYSTEM UTILIZATION FACTORS

Number of Outlets	Percent Usage
1--3	100
4-12	75
13-20	50
21-40	31
41 or more	25

9.6.20.4 Storage Capacity Sizing Method. In the absence of available historical oxygen consumption data, Table 9-14 shall be used in estimating required system storage capacity for MTF's having large in-patient populations (e.g. hospitals and medical centers). For facilities with predominantly outpatient functions, designers shall work with the Using Service to estimate consumption rates and appropriate storage capacities.

TABLE 9-14

CYLINDER MANIFOLD SYSTEMS

Number of Beds	Minimum Number of Cylinders [1]
1 - 50	8
51 - 75	12
76 - 100	16
101 - 125	20
126 - 150	24
Over 150	Requires special study [2]

[1] Per bank of "H" cylinders.
[2] The special study shall include an analysis of an appropriate diversity factor and the cost effective option between cylinder and bulk storage.

Little published data is available at present to help establish oxygen consumption on a per-outlet basis in predominantly outpatient facilities. Oxygen usage rates and procedural duration vary widely depending upon the clinical application. For example, a typical surgical procedure begins with a preparatory oxygenating period of up to 10 minutes at a consumption of 6 to 8 L/min (0.2 to 0.3 cfm). During the actual procedure, the usage rate decreases to 1 to 3 L/min (0.04 to 0.11 cfm) for a time period ranging from a fraction of an hour to several hours depending upon the nature of the surgery. A post-surgical de-nitrogenizing period of up to 10 minutes at 6 to 8 L/min (0.2 to 0.3 cfm) follows. Post-operative demands range as high as 18 L/min for recovery rooms with an average stay that ranges from 30 to 120 minutes. Oral surgery procedures usually involve a 6 L/min rate throughout the procedure. Specialty applications (e.g. pediatrics) tend to demand relatively higher usage rates. Because of these wide variations,

Designers shall closely coordinate with the Using Agency to establish system demand and size satisfactory storage capacity.

9.6.20.5 Liquid Bulk-Tank Storage. Designers shall coordinate with the Using Agency to consider the economic aspects of storage capacity. Excessive capacity translates to higher utilization costs due to boiloff. Too little capacity may lead to higher costs because of more frequent tank refills, which includes vented oxygen cost as well as delivery fees. Designers shall also consider the availability of oxygen refill service. For remote locations, oversized capacity may be more practical and economical to minimize deliveries and provide for unexpected consumption increases. The selection between purchasing or leasing the bulk storage tank and ancillary equipment shall be coordinated. Both economic and logistic factors relative to the given supplier(s) shall be considered.

The standard tank sizes are shown in Table 9-15. The tanks are normally leased with monthly rates typically ranging from $250 to $2000. Life cycle cost analysis will frequently show purchasing the liquid tank to be the more economical choice. In evaluating the costs associated with liquid services, be aware that the unit gas cost varies significantly with total delivery volume, presently from $0.75 to $1.25 per gallon for a 1895 liter (500 gallon) delivery, to as low as $0.40 to $0.45 per gallon for 34,065 liters (9000 gallons). Balance this consideration with boil-off costs. The average daily boil-off rate is approximately 0.5% of total tank volume.

TABLE 9-15

OXYGEN BULK TANK SIZES

Liters	Gallons
1,895	500
5,680	1,500
11,355	3,000
22,710	6,000
34,065	9,000
41,635	11,000
49,205	13,000
68,130	18,000
75,700	20,000

Fill (or purge) losses associated with the tank refill process may be significant. In tanks with a bottom-fill feature, gaseous oxygen must be purged prior to refill to lower the tank pressure below that of the delivery vessel, i.e. tanker truck. Depending upon local service availability, there are tank types and filling equipment which can minimize these losses. Top-filled tanks may be serviced without purge losses, if filling equipment is available with suitable pumps for overcoming tank pressure or utilizing the “top collapse” feature. These should be specified when available. The top-filling procedure must be conducted only by trained personnel to avoid uncontrolled system pressure drop below minimum service levels.

9.6.20.6 System Monitoring. The central oxygen system design shall facilitate oxygen system purity monitoring in accordance with DoD Directive 6055.10 (reference 9w).

9.6.21 Nitrous Oxide (NO). Nitrous oxide is an anesthetic gas capable of inducing the first and second stages of anesthesia when inhaled. It is classified as a nonflammable gas; however, it can increase the range of flammability of other materials and gases when

present in sufficient concentration. Its storage requires proper construction and ventilation in accordance with NFPA 99 (reference 9r). Nitrous oxide manifolds shall not be located outside in cold climates due to the low vapor pressure of nitrous oxide at low temperatures. Nitrous oxide shall be supplied at a minimum of 345 kPa (50 psig) at all outlets with a tolerance of +35 kPa (5 psig).

9.6.21.1 System Demand. The piping system shall be designed to provide for a demand of 20 L/min (0.7 cfm) per outlet with the usage factors from Table 9-16 (reference 9x).

TABLE 9-16

NITROUS OXIDE SYSTEM UTILIZATION FACTORS

Number of Outlets	Percent Usage
1--3	100
4-12	75
13-20	50
21-40	31
41 or more	25

For determining storage capacity for predominantly inpatient facilities, Designers may use Table 9-17. For predominantly outpatient facilities, designers shall determine storage requirements from historical consumption data of similar facilities, or by consulting the Using Agency as to the probable flow rate and duration for the planned healthcare procedures.

TABLE 9-17

NITROUS OXIDE SYSTEM MANIFOLD SIZING

Number of Beds	Number of Cylinders/Bank [1]
50 - 100	2 expandable to 4
100 - 250	4 expandable to 6
250 - 500	6 expandable to 8
500 or More	Special Study [2]

[1] Based on "G" cylinders and one complete change each week.
[2] The special study shall include an analysis of an appropriate diversity factor and the cost effective option between cylinder and bulk storage.

9.6.22 Nitrogen (NI). Nitrogen is an inert gas primarily used as an operating or driving means for medical and dental handpieces and equipment, and as an inert gas environment for laboratory uses. The cylinder manifold system shall be designed and installed in accordance with NFPA 99 (reference 9r). Nitrogen shall be supplied at a minimum of 1105 kPa (160 psig) at all outlets with a tolerance of +138 kPa (20 psig).

9.6.22.1 Control Cabinet. Each individual nitrogen use location (e.g., individual operating room, dental treatment rooms) shall be provided with a nitrogen control cabinet with pressure gauges and pressure regulating valves for the purpose of independently regulating pressures at that location.

9.6.22.2 Demand. The piping system shall be suitable to deliver 7 L/s (15 cfm) per outlet, with a demand usage factor of 100 percent. For the purpose of determining storage capacity, designers shall analyze the

nitrogen demand of the tools and equipment intended for that facility, in consultation with the Using Service. When this information is not available, the required storage capacity may be estimated using Table 9-18 (reference 9x).

TABLE 9-18

MANIFOLD SIZING FOR NITROGEN SYSTEM

Number of Using Locations	Cylinders per Bank *
1--4	2
5--8	3
9-12	4
13-16	5
17-20	6
21-24	7
25-28	8

* Assumes "H" cylinders and one complete change each week.

9.6.23 Sterilization Gas. Gas/vapor sterilization may be used for treating contaminated medical equipment, implements, and certain infectious waste. In this method, the sterilizing agent is a gaseous or vaporized chemical. The two most commonly used chemicals are ethylene oxide (ETO) and formaldehyde, which may be carcinogenic.

9.6.23.1 Ethylene Oxide. All precautions in the use of ETO as outlined by OSHA (reference 9y) and NIOSH CIB 52 (reference 9z) shall be strictly followed. ETO is regarded as a potential occupational carcinogen.

(a) Layout. Where ETO is planned in a facility, a separate room for sterilizer, ETO supply cylinder, and associated piping shall be provided. Access to this equipment and storage room shall be from the Central Material Service work area only. The front of the sterilizer shall be accessed from the loading room.

(b) Components. The cylinder supply line shall have a three-way valve to permit exhausting residual ETO vapors prior to changing the tanks. The supply, tank, and vent valves shall be labeled.

(c) Ventilation. Ventilation shall also be provided for the waste gases from the sterilizer evacuation line and the drain air gap. See the Heating, Ventilating and Air Conditioning Section for exhaust system design guidance.

(d) Emission Control. Some states have adopted legislation that prohibits the release of ETO sterilizer exhaust gas to the atmosphere. Presently the only available ETO emission control technology is based on a chemical conversion or scrubber. The design shall incorporate the necessary provisions to comply with both federal and state legislation. Local requirements shall be coordinated with the using Military Department and Design Agent.

9.6.24 Process Gas. Process gas is natural or propane that is used as a point-of-use heat or flame source. The process is typically found in laboratories and sometimes in other areas such as equipment repair and DTR's to support medical or dental functions. The gas system design shall be in accordance with NFPA 54 and 58 (references 9o and 9p).

9.6.24.1 Load. The load is the sum of the consumption rates for the given apparatus or equipment to be serviced. Laboratory burners are typically sized at 1465 W (5,000 Btuh) for small burners and 3075 W (10,500 Btuh) for large burners. For other equipment such as casting ovens, use manufacturers data.

9.6.24.2 Demand is based upon the number of outlets shown in Table 9-19.

TABLE 9-19

PROCESS GAS UTILIZATION FACTORS

Number of Outlets	Percent Usage (%)
1 - 8	100
9 - 16	90
17 - 29	80
30 - 79	60
80 - 162	50
163 - 325	40
326 - 742	35
743 - 1570	30
1571 - 2900	25
>2900	20

REFERENCES

9a. National Association of Plumbing-Heating-Cooling Contractors (NAPHCC), “National Standard Plumbing Code.”

9b. International Code Council (ICC), “International Plumbing Code.”

9c. National Association of Corrosion Engineers (NACE), "Book of Standards and Their Applicable Recommended Practices."

9d. Center for Disease Control and Prevention, “Guideline for Prevention of Nosocomial Pneumonia.”

9e. American Society of Heating, Refrigerating, and Air-Conditioning Engineers, Inc, ASHRAE Guideline 12-2000, “Minimizing the Risk of Legionellosis Associated with Building Water Systems.”

9f. American Society for Healthcare Engineering/Joint Commission on Accreditation of Healthcare Organizations, “Waterborne Pathogens – Compliance with JCAHO Requirements.”

9g. American Society of Testing and Materials, ASTM D 1193, “Reagent Water.”

9h. American Society of Heating, Refrigeration and Air-Conditioning Engineers, ASHRAE Handbook, “HVAC Applications - Service Water Heating.”

9i. American Society of Plumbing Engineers, Data Book, Chapter 4, “Service Water Heating Systems.”

9j. MIL-STD-1691, "Construction and Material Schedule for Military Medical and Dental Facilities."

9k. American Society of Mechanical Engineers International, ASME Series A112 Plumbing Fixtures and Appurtenances, e.g. “Enameled

Cast Iron Plumbing Fixtures”, “Vitreous China Plumbing Fixtures”, and “Porcelain Enameled Formed Steel Plumbing Fixtures”.

9l. International Association of Plumbing and Mechanical Officials, IAMPO Series Z124 Plastic Plumbing Fixtures.

9m. Air Conditioning and Refrigeration Institute, ARI Standard 1010, "Drinking-Fountains and Self-Contained, Mechanically-Refrigerated Drinking-Water Coolers."

9n. American National Standards Institute, ANSI Standard Z358.1.

9o. NFPA 54, “National Fuel Gas Code.”

9p. NFPA 58, "Standard for Storage and Handling of Liquefied Petroleum Gases."

9q. NFPA 59A, “Standard for Liquified Natural Gas (LNG).”

9r. NFPA 99, "Standard for Health Care Facilities."

9s. NFPA 50, "Standard for Bulk Oxygen Systems at Consumer Sites."

9t. Compressed Gas Association, CGA Pamphlet P-2, “Characteristics and Safe Handling of Medical Gases.”

9u. Compressed Gas Association, CGA Pamphlet C-9, "Standard Color-Marking of Compressed Gas Cylinders Intended for Medical Use."

9v. Compressed Gas Association, CGA Pamphlet V-5, “Diameter-Index Safety System – Non-Interchangeable Low Pressure Connections for Medical Gas Applications.”

9w. DOD Directive 6055.10, "Storage and Administration of Oxygen for Medical Use."

9x. American Society of Plumbing Engineers, Data Book 3, Special Plumbing Systems, Chapter 2, “Plumbing Design for Health Care Facilities.”

9y. Occupational Safety and Health Administration of the U.S. Department of Labor, 29 CFR 1910.1047(a), "Ethylene Oxide."

9z. National Institute for Occupational Safety and Health, Current Intelligence Bulletin 52, "Ethylene Oxide Sterilizers in Health Care Facilities."

Additional Note - Compressed Air Systems:
MECHANICAL REFRIGERATION VERSUS DESICCANT COMPRESSED AIR DRYERS.

There are definite advantages and disadvantages for each dryer technology, and type selection must consider the individual requirements and characteristics of each project. While there seems to be a trend toward greater utilization of desiccant systems, refrigerated dryers continue to represent the bulk of the systems sold. The principle concern with the refrigerated type is the presence in the air of excessive moisture. However, research does not clearly establish that high moisture levels are a pervasive or unavoidable problem in U.S. military MTF's. There are also concerns in our community with desiccant systems, including excessive air dryness and higher first cost. The concerns with each system are described below:

Refrigerated Dryers.

Advantages:

a. Typically lower cost.
b. Lower space requirements.
c. Presence of higher moisture level in air (higher dewpoint) is better for some procedures.
d. Lower compressor capacity required than desiccant systems.

Disadvantages:

a. Limited minimum dewpoint level of 35-39 F; higher dewpoint means greater potential for system condensation.
b. Moisture carryover potential due to evaporator icing, or failure of automatic receiver drainage equipment. (May be correctable by cycling controls and proper specification of components.)
c. Requires regular maintenance.

Desiccant Dryers.

Advantages:

a. Drier air (as low as –40F dewpoint) leads to lower probability of condensate formation or carry-over in the supply system.
b. Relatively lower maintenance required.

Disadvantages:

a. Very low dewpoint can cause problems with some dental procedures (upward adjustment available in some capacity ranges from some manufacturers but required competitive procurement eliminates ability to specify).
b. Larger compressor capacity required than refrigerated system (to supply additional air for desiccant regeneration).
c. Higher cost.

SECTION 10: ELECTRICAL

10.1 GENERAL. This section provides Department of Defense (DOD) policy and guidance for planning, designing and construction of electrical power and illumination systems for Military Medical and Dental Treatment Facilities (MTF's). The words "WILL" and "SHALL" identify mandatory policy and requirements, where the words "Should" or "May" identify guidance.

10.1.1 CRITERIA.

10.1.1.1 SCOPE. The latest version of the general electrical and illuminating criteria and standards are referenced at "Applicable References, TABLE 10.1." Special DOD electrical criteria, standards and policy for medical facilities are covered in this chapter. Where criteria and standards for general and specific conditions and problems are not covered, acceptable industrial standards shall be followed.

10.1.1.2 POWER SUPPLY CRITERIA FACTORS. Military facilities are generally classified as mission essential or mission support. The designer will verify with the Design Agent the facility classification and design requirements to achieve the necessary degree of reliability, durability, maintainability, efficiency, and economy as appropriate for the types of facilities delineated in MIL-HDBK-1190 before commencing design.

a. RELIABILITY. Mission classification and requirements covered in the Department of Defense (DD) Form 1391, and Mil-HDBK-1190 will be used to establish the design reliability requirements. An alternative comparison assessment will be developed to evaluate the reliability choices. Alternative power systems may be authorized, but are limited to serving certain essential loads for mission critical, hospital, and other special facilities and loads as identified therein. The designer shall consider the location and space for essential electrical system components in order to limit interruptions caused by localized natural conditions, such as floods and earthquakes. Essential systems will be designed to function after seismic events occur. Non-essential systems may be inoperable, but components will be constrained to avoid personnel injury, or damage to other building components.

b. DURABILITY. Installed electrical systems and electrical equipment will have a minimum rating for continuous full design load, except where other criteria mandate greater, to meet the reliability requirements for the design life of the facility. MIL-HDBK-1190, paragraph "Construction Level and Building Types," identifies the design life for facilities.

c. MAINTAINABILITY. The design and construction for facilities will provide a means to remove and maintain equipment, and field installed wiring without interruption to mission critical loads.

d. EFFICIENCY. The efficiency of the facility electrical system, measured at the utilization transformer secondary and the alternative power source, will have a power factor (PF) not less than 0.90 at nominal voltage for balanced three phase loading (phase unbalance will not exceed 5 percent between A, B, and C phase). Where required power factor correction shall be used to assure a minimum PF of 0.90.

e. ECONOMY. Evaluate alternative system configurations, and component types and sizing for economic value, consistent with other criteria factors above, and as noted in MIL-HDBK-1190.

10.1.2 DEFINITIONS.

10.1.2.1 NFPA-99 and 70 discuss various minimum safe practices, and safety requirements for "General Care", "Critical Care" and "Wet Locations." Defense Medical Facility Office (DMFO) has identified the following patient care areas for hospitals as "Critical Care Areas" where patients may be subjected to

invasive procedures and connected to line-operated electromedical devices:

a. Operating rooms.
b. Delivery rooms and Labor and delivery rooms.
c. Cystoscope rooms.
d. Oral Surgery Maxillofacial surgery, Perodontics, and Endodontics.
e. Recovery (surgery, and labor recovery beds).
f. Coronary care units (patient bedrooms).
g. Intensive care unit (patient bedrooms).
h. Emergency care units (treatment/trauma/urgent care rooms and cubicals).
i. Labor rooms (including stress test and preparation).
j. Intensive care and isolation care nursery.
k. Cardiac catherization.
l. Angiographic exposure room.
m. Hemodialysis (patient station).
n. Surgery suite preparation and hold.
o. Hyperbaric chamber.
p. Hypobaric chamber.
q. Radiation Therapy (including simulator room).
r. Nuclear medicine (camera room).

10.1.2.2 All other patient care areas will be treated as "General Care."

10.1.2.3 WET LOCATIONS. Those patient care areas that are normally subject to wet conditions [see paragraph 10.3.13, " GROUND-FAULT CIRCUIT-INTERRUPTERS (GFCI)"] including standing water on the floor, or routine dousing or drenching of work areas and those areas defined in NFPA-99 and 70. Routine housekeeping procedures and incidental spillage of liquids are not defined as wet locations. Operating rooms, delivery rooms, cystoscope rooms, oral surgery, cardiac catherization rooms and other such rooms are not wet areas.

10.2 EXTERIOR ELECTRICAL.

10.2.1 Exterior electrical systems shall conform to ANSI-C2, "National Electrical Safety Code," except where Service technical criteria have more stringent requirements.

10.2.1.1 COMMON VOLTAGES. 4.16kv, 12.47kv, 13.2kv, 13.8kv and 34.5kv are common distribution voltages for military installations. However, 12.47kv, 13.2kv, and 13.8kv are the normal distribution voltages serving medical facilities.

10.2.2 NORMAL SOURCE SITE INVESTIGATION. Site electrical evaluation shall meet the requirements of Section 2, "DESIGN PROCEDURES, SUBMITTALS, AND DOCUMENTATION."Coordinate electrical utility siting with other utilities. Provide underground distribution on site, and visual screening by location or landscaping elements, where appropriate for the project, to improve overall site aesthetics.

10.2.3 NORMAL HOSPITAL SOURCE. For electrical design criteria related to power supply, see documents listed in "TABLE 10-1 APPLICABLE REFERENCES." Hospitals will be served by two primary service feeders each serving one end of a double-ended substation or to a selector switch serving a multi-ended network substation (See ANNEX B for additional criteria requirements related to the multi-ended network substation). Each feeder shall be able to carry the full hospital demand plus 20 percent spare load growth, and shall be installed underground within the hospital site. Dual primary feeders serving both ends of a double-ended substation, through a primary selector switch, as illustrated in Figure 10-1 of MIL-HDBK-1191 must have prior approval of the design agency before incorporation into a design. Service feeders will be connected to different power sources, if available, and to two differently routed distribution system feeders. Where two power

sources are not available, the service feeders may be connected to two different sections of a loop system. Manually operated primary selector switch and fused load break disconnect switch will be provided for each transformer as indicated in Figure 10-1. Transformers will normally be located outside the hospital, but may be located within the building where practicable and economical. Double-ended unit substation distribution systems will be designed for hospitals, medical centers and specially designated facilities. Each transformer in the double-ended unit substation will be sized to serve approximately 60-70 percent of the substation demand load (linear and nonlinear) before forced air cooling is initiated and 100% of demand load with forced air cooling initiated and will be impedance matched. All double-ended unit substations will have coordinated surge and fault protection. System protection will be selective.

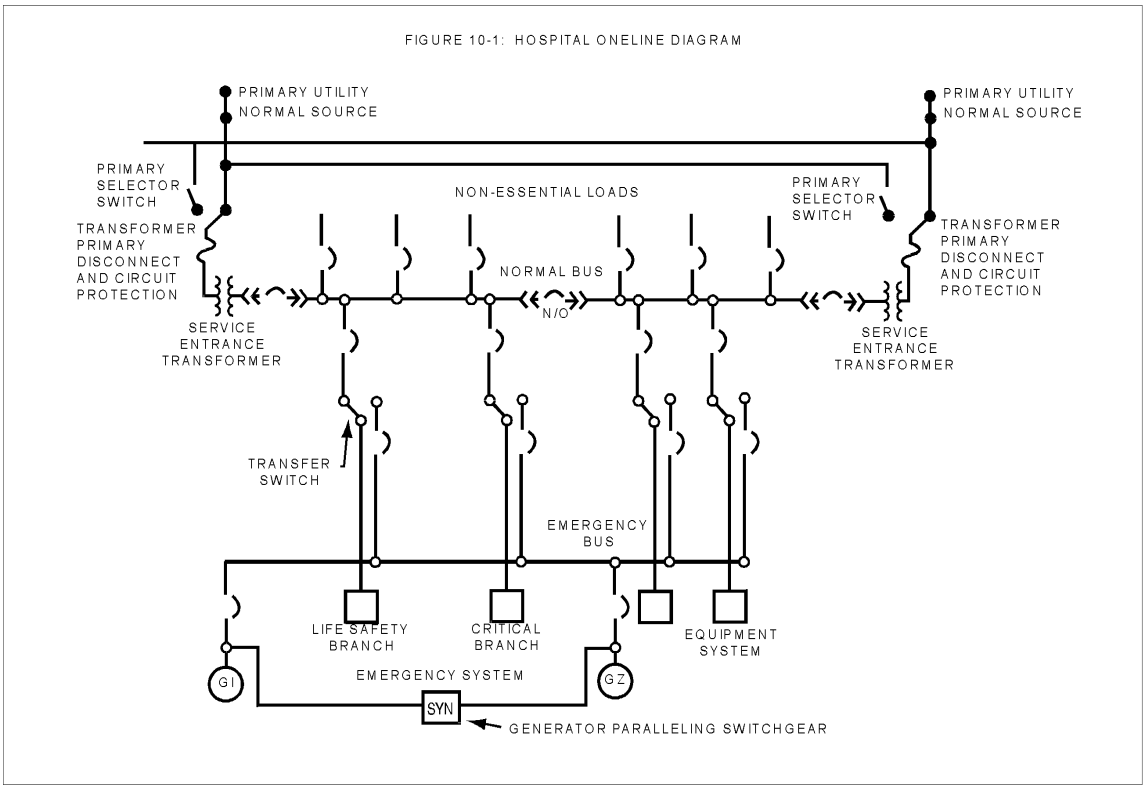

FIGURE 10-1

10.2.4 NORMAL AMBULATORY AND CLINIC SOURCE. All other health care facilities will be served by a single-ended substation distribution system with coordinated surge and fault protection. The primary service feeder will be designed to carry full demand plus 20 percent spare load growth capacity.

10.2.5 TRANSIENT PROTECTION. Systems that incorporate solid state devices are susceptible to electrical system transients that can cause system malfunction or equipment component damage. Unless specifically required for specific items of equipment by the using Military Department and/or by an A&E (designer) evaluation of solid state requirements for intensive care areas and approved for installation by DMFO power conditioning equipment will normally not be installed as part of the building electrical system at the utilization point. Contractor-furnished, contractor-installed systems that utilize solid state devices will be provided with transient protection. Static Uninterruptible Power System (UPS) will normally be provided with the equipment and system being served. However, requirement or provisions for UPS will be determined on a project-by-project basis. Provisions for future installed power conditioning equipment will be determined on a project-by-project basis.

10.2.6 GROUNDING. System ground shall be adequate for safety and for reliable operation of sensitive Users' and facility equipment. Typical communications system equipment used in hospitals requires five ohm system ground for proper operation. All grounding systems will be bonded together as required by NFPA 70. See paragraph 10.4.8, “PATIENT CARE AREA GROUNDING for further requirements.”

10.3 ALTERNATE POWER SOURCE.

10.3.1 ALTERNATE ELECTRICAL SOURCE. The alternate electrical source will conform to NFPA-70 and 99 except where Service criteria listed in “TABLE 10-1" have more APPLICABLE REFERENCES stringent requirements. Additional load capacity may be provided those hospitals assigned mobilization or mass casualty response missions, or located in an area where extended power outages are frequent. The emergency power source will be designed as a separately derived power source. True RMS metering will be provided for load monitoring.

10.3.2 AMBULATORY CARE CENTERS and CLINICS. An alternate power source shall be provided if required by NFPA-99 [TABLE 10-1 APPLICABLE REFERENCES] If an on-site generator set is not required by NFPA-99 and 70, approval by TMA/DMFO for a generator must be justified by the using Military Department. The justification will address mission contingency requirements, local power requirements, and safety for human life.

10.3.3 MEDICAL AND DENTAL CLINIC. Where any concentration of inhalation anesthetic or intravenous sedation is used or any electrical life support or resuscitative equipment is used in medical or dental clinics, *an* alternate source of power is required in accordance with NFPA-70, paragraph 517-50, and NFPA-99 . The alternate source of power will be either a generator, battery system, or self-contained battery internal with the equipment and will have the capacity to sustain its full connected load at rated voltage for a minimum of 1 and 1/2 hours. The system will be so arranged that the alternate source of power shall be automatically connected to the load within 10 seconds. The essential electrical system will supply power for task illumination related to life safety which is necessary for *safe* cessation of procedures and all related anesthesia and resuscitation equipment.

10.3.4 HOSPITALS. The alternate power source will consist of two or more engine generator sets designed to provide electrical power for hospital essential electrical systems, plus 20 percent future load growth (Fig *10-1)* during the interruption of the normal power supply, as required by NFPA 70 and NFPA 99. Where the essential electrical system load is less than 150KVA, one generator may be considered. The experience level of available maintenance, availability of parts, and factory service will be factored into CONUS and OCONUS designs. The generator sets will be of equal capacity and ratings with matched impedance and loss characteristics and designed to carry, in parallel or through priority transfer equipment, the maximum demand load (linear and nonlinear) of the essential electrical system. Motor starting and X-ray unit momentary kva loads will be evaluated when sizing engine generator sets.

Parallel operations of the generator sets will be as indicated by Fig 10-1. Automatic load shedding with manual override controls and load shifting capacity will be incorporated in-the-event that one generator fails. Each generator will have the capacity to handle the life safety and critical care demand loads.

10.3.5 ENGINE GENERATOR SETs. Engine generator sets for hospitals (MEDICAL FACILITIES) will be powered by diesel fuel and conform to Table 10-2, "Diesel Electric Generator Sets for Medical Facilities (for 60-Hz power)." The preferred generating voltage is the highest utilization voltage proposed for the facility. Normally 480Y/277 volt, 3-phase, 4-wire system is the highest utilization voltage. Higher voltages may be generated where line losses would otherwise be excessive. The sets will include automatic start-and-stop equipment, solid state battery chargers, fuel storage tanks, audible and visual warning device to alert of less than 3 hours fuel supply, and day tanks and radiators as required. The engine will have a residential type exhaust silencer and will be able to start and assume its full electrical loads within 10 seconds from the interruption of the normal electrical power source. Generator controls will include reverse power relays to prevent generator damage from commercial or on site generators per NFPA-110. If computers are to be operated directly from the emergency generator (not through a UPS or uninterrupted power supply), an isochronous governor is required.

TABLE 10-2

CONTINUOUS AND EMERGENCY RATED

DIESEL-ELECTRIC GENERATOR SETS FOR MEDICAL FACILITIES

DEFINITIONS:

1. Prime Power Class engines are for use with diesel-electric generator sets expected to provide power on a continuous basis (i.e., in excess of 4,000 hours annually or in excess of 40,000 hours during the initial 10 years of operation) to serve as the sole or primary source of power.

2. Standby Power Class engines are for use with diesel-electric generator sets expected to provide power on a standby basis for a significant number of hours each year (i.e., between 1,000 and 4,000 hours annually or between 10,000 and 40,000 hours during the initial 10 years of operation).

3. Emergency Power Class engines are for use with diesel-electric generator sets expected to provide power on an emergency basis for a short period of time (i.e., less than 1,000 hours annually or less than 10,000 hours during the initial 10 years of operation).

DESIGN APPLICATION:

1. For 50-Hz power the indicated speed limits should be reduced to the nearest synchronous speed for that frequency.

2. Hospital diesel-electric generator sets are normally EMERGENCY POWER CLASS.

3. Hospital diesel-electric generator sets used for co-generation will be Class "PRIME POWER" or "STANDBY POWER".

4. Design and Construction Cost for Co-generation. The cost differential between medical emergency power and co-generation capacity will not be funded with medical project funds.

10.3.6 LOCATION OF ENGINE-GENERATOR SETs. Generator sets normally will be located in the central energy plant serving the hospital,provided that the plant is located sufficiently close to the structure to minimize line losses and prevent excessive cable runs. When the central energy plant is remote from the hospital structure, generators will be installed in a generator building located adjacent to the structure or within the structure at ground level (along the exterior wall) whichever is more economical. The generator and emergency switch gear rooms will be located at or near the building exterior to facilitate initial installation and removal and replacement of defective equipment and will be provided with 1 and 1/2 hours battery back-up for general illumination. The generator sets and auxiliaries will be arranged and located so minimum facility modifications will be required for future installation or replacement of an additional generator set and auxiliaries. Service entrance transformers *and* other equipment not supporting the essential electrical system will not be installed in the same area (room) as the engine-generator sets. Provide view window in or adjacent to the entrance door.

10.3.7 ENGINE STARTING. Electric start will be provided on engine-generator sets rated below 700Kw and either electric or pneumatic start will be provided on engine - generator sets rated 700Kw through 1000Kw. For all engine-generator units rated above 1000Kw, only pneumatic start will be provided. Reference NFPA-99.

10.3.8 MANUAL TEST SWITCHES. Manual test switches will be provided for each automatic transfer switch of the essential electrical system. A group of test switches will be provided at a single point in the generator control area and one test switch will be provided with each automatic transfer switch. The two test switches associated with each transfer switch will be wired in series to allow testing at either location. Testing of either individual automatic transfer switches or the entire essential electrical system will be possible. Each test switch will simulate a normal power source failure and automatically cause the engine generator sets to crank, attain rated frequency and voltage, and to transfer associated essential electrical system loads from the normal source to the emergency source. After 30 minutes of operation in the emergency mode, essential electrical system loads being tested will again be automatically transferred back to the normal source. If for any reason the generator units experience difficulty while in the emergency mode, the load will immediately be transferred to the normal source automatically. During this test run, nonessential hospital loads will continue to be served from normal power supply without experiencing interruption. A manual override switch will be installed that can be actuated to keep essential hospital loads on the emergency source as long as desired. This switch will permit engine generator sets to operate indefinitely beyond the 30 minute automatic transfer restoration time.

10.3.9 GENERATOR SET OPERATION. Generator sets will be designed to function essentially as follows: After 30 hertz (CYCLES) following an interruption of the normal power supply, each generator set will receive the starting signal simultaneously, whereupon each set will automatically crank and attain normal speed and voltage. Voltage for sensing devices to start generator sets will be taken from each phase of the incoming normal power terminal of each automatic transfer switch. The first generator sets to reach preset voltage and frequency conditions will be automatically connected to the emergency bus. System protection will be provided to prevent simultaneous connection of non-synchronized generators to the dead emergency bus. A priority selective device will be provided and programmed or preset to transfer the emergency system loads from the normal bus to the emergency bus within 10 seconds from time of NORMAL POWER interruption. The remaining unit will automatically synchronize with the emergency bus, close the respective generator breaker, and connect the units in parallel for normal operation. After this, the equipment system loads will be automatically transferred to the emergency bus by programmed or preset incremental steps. The equipment system loads will be completely transferred within 45 seconds, based on a priority sequence, after the generator sets are connected in parallel. Should one or more of the generator sets fail to crank or is shutdown for any reason during the operation, the remaining unit will be scheduled to serve only emergency system loads and, if possible, highest priority equipment system loads until the failed unit is energized and connected to the emergency bus. For such a condition, a programming device will shed all or part of the equipment loads, to keep the remaining generator within its kw rating. If the automatic controls fail, a manual start switch will be provided to override the automatic start of the engine-generator sets so they can be cranked, synchronized and connected on the emergency bus.

10.3.10 RETURN TO NORMAL POWER SOURCE. Thirty minutes following the return of a stable normal power supply, both emergency system loads and equipment system loads will be automatically transferred to the normal power source. An automatic timer, having an adjustable time range of from 2 to 30 minutes (set at 30 minutes), will be provided to this transfer. Following transfer of the loads, generator sets will continue to run, unloaded, for a

period of 15 minutes before shutdown, after which the controls will automatically reset for a new cycle. A manual start switch will override the automatic start of engine generator sets so they can be manually cranked, synchronized, and connected to the emergency bus, if automatic controls fail. Additional manual controls will be provided as indicated elsewhere in this section.

10.3.11 AUTOMATIC TRANSFER SWITCHES (ATS). All ATSs will be double-throw with draw-out construction. Contacts will have viewing ports for ease of contact inspection. ATSs shall have been UL tested with the main up-stream breaker to assure coordinated withstand compatibility between the ATS and the interruption time of the breakers. Circuit breaker type transfer switches are not acceptable . Each ATS will have indicator lights to identify Normal Power (green in color) and Emergency Power (red in color). All ATSs will be equipped with a load break by-pass isolation switch (The by-pass isolation switch can be initiated with not more than two movements of the hand to either position regardless of the position or condition of the ATS.) to maintain normal or emergency power while the ATS is being repaired or maintained. Load bypass to the ATS's connected source will be achieved with either no load interruption, or a load interruption of not more than 10 (CYCLES) hertz. ATSs feeding high efficiency motors rated 25 horsepower or larger will be provided with an in-phase monitor to prevent an out-of-phase transfer. The in-phase transfer will be achieved without control of the frequency of either power source to prevent excessive motor in-rush current. Use of closed-transition switching for facilitating essential system testing requires special justification and approval. The by-pass isolation switch for the ATSs serving nonessential equipment can be optional.

10.3.12 ATS AND BYPASS/ISOLATION SWITCH (BP/IS),TESTING. Laboratory testing will be conducted on the ATS and BP/IS to be supplied for this facility, or shall have been completed on a previous, randomly selected standard production ATS and BP/IS unit having the same model and capacity as the ATS and BP/IS specified. The overload, endurance, and temperature tests shall be conducted in the following specified sequence:

a. General.
b. Normal Operation.
c. Overvoltage.
d. Undervoltage.
e. Overload.
f. Endurance.
g. Temperature Rise.
h. Dielectric Voltage - Withstand.
i. Contact Opening.
j. Dielectric Voltage-Withstand (Repeated).
k. Withstand.
l. Instrumentation and Calibration of High Capacity Circuits.
m. Closing.
n. Dielectric Voltage - Withstand (Repeated).
o. Strength of Insulating Base and Support.

No deviation from the test sequence will be granted. Approval will not be granted to deviate from the overload, endurance and temperature test sequence.

10.3.13 GROUND FAULT PROTECTION EQUIPMENT. The essential electrical system will not be provided with ground fault protection devices. The generator circuit breaker and essential electrical main distribution board circuit breaker will be provided with ground fault detection features, when required, to indicate a ground fault and sound an audible alarm but not trip the breaker (See paragraph 10.3.1, "ALTERNATE ELECTRICAL SOURCE").

10.3.14 REMOTE ALARM ANNUNCIATOR. A remote alarm annunciator, storage battery powered, will be provided in a location readily observed by operating personnel at a regular work station. The annunciator will indicate alarm

conditions of the alternate power source as indicated in NFPA-99 and 110, and will include as a minimum the following: battery and battery charger malfunction, engine generator run status, engine generator alarms, and less than 3 hours fuel supply in the day tank and 24 hours supply in the main storage tank. A separate audible and visible derangement signal will be provided within the hospital at a location that is continuously monitored. Location will be as indicated in Section 11, “COMMUNICATIONS, INFORMATION SYSTEMS, and SIGNAL SYSTEMS.” This derangement signal will be appropriately labelled but need not display individual alarm conditions.

10.3.15 FUEL STORAGE TANKS. The fuel storage tanks and installations in Hospitals will comply with NFPA-30, "Flammable and Combustible Liquids Codes," and Local, State, and Federal Environmental Protection Agency requirements. The capacity of the fuel oil tank will be sized to the nearest standard size for a fuel storage use capacity of normal usage which will be not less than a 4-day supply at full load. A larger or smaller tank may be supplied as the local fuel supply conditions permit. If underground fuel storage tanks are required, they shall be double wall with leak detection in accordance with the Environmental Protection Agency (EPA) standards. Separate day tanks, with an overflow back to the main storage tank, will be provided for each engine generator set and will be sized (not less than 4 hours operation at full load) as follows:

50 kW to 100 kW generator:	25 gallon min. - 50 gallon max.
101 kW to 200 kW generator:	50 gallon min. - 75 gallon max.
201 kW to 300 kW generator:	75 gallon min. - 100 gallon max.
Over 300 kW generator :	100 gallon min. - 250 gallon max.

A set of duplex transfer pumps will be provided for each fuel storage tank. Each fuel transfer pump will be sized to accommodate all generators including future set. All electric fuel tank and related fuel transfer pumps shall have power available at all times. Provide fuel filtering equipment as recommended for the generators and the local site conditions. Natural gas or comparable gas fuel will not be used as an operating fuel for hospital emergency power generation.

WARNING: Number 2-diesel fuel can be used in lieu of Number 2-heating fuel. However, number 2-heating fuel can not be used in emergencies as a substitute for number 2-diesel unless the flash point is 125°F, cetane number is 40 and the average Btu/gal is 141,800 (See ASTM D975 for more details).

10.3.16 LOADS ON THE ALTERNATE SOURCE. The alternate power source will have sufficient capacity to supply the essential electrical system of the hospital as outlined in NFPA-70, as modified herein, and as required by items listed in Appendix A of MIL-HDBK-1191. Avoid oversizing of generator sets such that load banks are needed for testing under load as required by accreditation authorities. Note that operating generators at low loads leads to fouled combustion, and unreliable performance. The essential electrical system consist of two parts: the emergency system and the equipment system. The emergency system will consist of two branches: the life safety branch and critical care branch. The life safety branch shall have no loads connected to it other than those loads identified in NFPA-70 and 99. The failure of a critical branch component between the area and the transfer switch could render the entire section without power. Supplying a mixture of normal, critical, and even equipment branch power to critical areas is more reliable and is recommended in NFPA-99. The essential equipment system will serve all essential equipment listed in NFPA-70 and 99. Additional loads may be added to the critical branch or equipment system by the using Military Department as needed if it improves hospital operations. The power and lighting loads for the following areas will be connected to the critical branch:

a. Operating rooms.
b. Delivery rooms,and Labor and delivery rooms.
c. Cystoscopy rooms.
d. Oral Surgery, Maxillofacial surgery, Perodontics, and Endodontics.
e. Recovery (surgery, and labor recovery beds).
f. Coronary care units (patient bedrooms).
g. Intensive care unit (patient bedrooms).
h. Emergency care units (treatment/trauma rooms and cubicals).
i. Labor rooms (including stress test and preparation).
j. Intensive care nursery.
k. Cardiac catherization.
l. Angiographic exposure room.
m. Hemodialysis (patient station).
n. Surgery suite preparation and hold.
o. Hyperbaric chamber.
p. Hypobaric chamber.
q. Special procedure room(s).
r. Pharmacy dispensing.
s. Radiation Therapy (including simulator room).
t. Nuclear medicine (camera room).

10.3.17 ESSENTIAL LOADS. Essential loads are divided into three categories: Life safety, Critical Care and Equipment. These loads receive both normal and emergency power. However, dual source critical power is required in some areas (Appendix "A" of MIL-HDBK-1191, and Service Medical Guide plates as applicable). This information can be found in the Guide Plates, when issued for use. The following information derives from the current editions *of* NFPA-99 and NFPA-70; Designer’s shall refer to the latest editions of these standards as they become available.

10.3.17.1 LIFE SAFETY BRANCH LOADS. The life safety branch provides emergency power to ensure patient and personnel safety during the interruption of normal power source. The following lighting, receptacle and equipment limitations are as defined by NFPA-70 and 99:

a. Egress illumination includes 25% of corridor and 50% of stairway illumination, plus 25% of assembly areas such as dining rooms, chapels and auditoriums.

b. Exit signs shall be selected to provide visibility in smoke conditions

c. Fire alarm and piped medical gas alarm systems, including smoke alarms, medical vacuum system alarms and alarms for ventilation for smoke evacuation for those areas where patient evacuation is not feasible.

d. Emergency communications to be used to notify the general population (radio paging and intercom systems), including telephone system, power and lighting for communication closets and crisis control centers, and associated equipment. Various related systems are included as directed.

e. Selected power, task lighting and receptacles at generator set locations; in transformer, switchboard , mechanical and electrical equipment rooms; repair shops and other equipment rooms; and charger for battery powered emergency light sets.

f. Elevator cab lighting, control, communication and signal systems.

g. Generator set auxiliaries, battery charger and jacket water heater.

10.3.17.2 CRITICAL BRANCH LOADS. Emergency alternate power will supply task illumination, fixed equipment, selected receptacles and special power circuits serving areas and functions related to inpatient care during the interruption of normal power. The following are in agreement with NFPA-70 and NFPA-99:

a. Nurse call, telephone equipment and selected computer equipment and selected data outlets.

b. Oxygen and medical gases equipment.

c. In patient rooms (on inpatient nursing units), one duplex receptacle will be provided per bed including mobilization beds located in the patient service console. Two additional wall-mounted duplex receptacles will be provided in single bedrooms and pediatric bedrooms.

d. All receptacles in patient service consoles, isolation nursing rooms, cystoscopy, IVP rooms, cardiac catheterization room, radiographic special procedure rooms, oral surgery room, and recovery rooms. Provide additional normal powered receptacles for backup of critical circuits.

e. All receptacles in selected rooms in the surgery suite, the delivery suite, nursery, coronary care unit, intensive care units, hemodialysis, and emergency.

f. All equipment for the refrigerated storage of blood, biological, pathology specimens and medicines.

g. Two X-ray rooms (including one fluoroscopic room) and required automatic x-ray film processor station.

h. Dental oral evacuation system and dental compressed air system.

i. Laboratories, incubators, analysis, blood bank, chemistry, hematology plus selected receptacles.

j. One flash sterilizer in each surgical suite and delivery suit cluster core.

l. Selected receptacles in admitting and disposition, pharmacy, treatment rooms, nurse stations, and oral surgery rooms, Maxillofacial surgery, Perodontics, and Endodontics clinic treatment areas with central piped medical gas outlets.

m. Medical preparation stations and nourishment stations.

10.3.17.3 EQUIPMENT SYSTEM LOADS. Equipment system feeders and branch circuits connected to the emergency/alternate power source will supply loads automatically in a delayed selective order through automatic transfer switches. The following equipment list derives from the current editions of NFPA-99 and 70; Designers shall refer to the latest editions as they become available.

a. One passenger type and one hospital service elevator per hospital wing (or section if applicable) to operate on a selective basis.

b. Fire pumps and controls will be the first to connect and the last piece of equipment to be shed. The load for fire pumps will be based on the lock rotor current of the motor plus the controls.

c. Refrigeration, food service and morgue refrigeration.

d. Essential power for auxiliaries and controls to provide safe operation of the heating plant.

e. Medical vacuum, waste anesthesia evacuation, and medical air system; dental vacuum and dental air systems emergency power support shall be determined upon a project by project basis in coordination with Using Service requirements and other provisions of this Section.

f. HVAC systems, including cooling *and heating* capacity for all critical care spaces, and heating of patient bedrooms

g. Domestic water, sump and sewage equipment needed to continue hospital operations.

h. Special purpose exhaust systems, hoods in laboratories, including radioisotope hoods, and isolation room exhaust fans.

i. The pneumatic tube system.

j. Helipad lighting and visual navigational aids.
If night operations are required, 10 minutes of battery backup will be provided to obtain no break system.

10.3.18 ALTERNATE SOURCE TESTING. Alternate power source emergency systems shall be tested before final acceptance, for proper operation, as required by NFPA 99 and 110. All connected loads will be made operational, and will be operating within normal demand load tolerances. Alternate systems will be designed to facilitate periodic system-wide and component test and inspection.

10.4 INTERIOR ELECTRICAL SYSTEMS. Interior electrical systems shall conform to NFPA codes except where military departmental criteria are more stringent.

10.4.1 UTILIZATION VOLTAGE. 480Y/277V, 460V, 208Y/120V, 240V and 120V low voltages and 4.16kV and 6.9kV medium voltages are common utilization voltages found at military installations. However, 480Y/277 volt and 208Y/120 volt are the standard utilization voltages for new and existing medical facilities.

10.4.1.1 INTERIOR DISTRIBUTION. Interior lighting and power loads will be served at the highest voltage practicable. Fluorescent and high intensity discharge (HID) lighting systems and building power loads will be supplied by a 480Y/277 volt system. Dry-type transformers will be utilized to furnish 208Y/120 volt power for incandescent lighting, receptacle, and small equipment loads. These transformers will be "K" factor rated if required for specific non-linear loads (See sample analysis matrix Table 10-4). Where transformer type voltage regulators are used to maintain nominal voltage within plus or minus 5%; an automatic step or induction transformer regulator shall be used which have adjustable high and low voltage limit controls and a voltage meter. A 208Y/120 volt system will be provided where the use of higher voltage is not cost effective. Main distribution switchgear and switchboards will be the draw-out, solid state, adjustable trip circuit breaker. Panelboards for branch circuits will be of the circuit breaker type. Ground fault protection will be provided in accordance with NFPA-70 and 99. All protective devices will be coordinated for selective overload, short-circuit, and ground fault protection. Ground fault protection of the essential electrical system will be as required above.

10.4.1.2 COORDINATION AND SHORT-CIRCUIT SYSTEM ANALYSIS. Short-circuit and protective devices coordination studies will be in accordance with TM 5-811-14. Additionally, a coordinated protective devices setting will be provided by the designer. Selection of protective devices and switchgear for a new electrical system shall be based on a short-circuit protective device coordination analysis. For additions or modifications to existing system, the analysis shall include all of the protective devices affected in the existing system. All protective devices shall be properly coordinated to provide selective tripping. No, series rated protective equipment and/or devices will be allowed! Surge protection should also be incorporated in the coordination analysis.

10.4.1.3 LOCATION AND SPACE REQUIREMENTS. Electrical equipment rooms will be located at or near the building exterior to facilitate initial installation of large equipment, and removal and replacement of defective equipment. Adequate space will be provided for maintenance of electrical equipment and equipment removal. Pipes and other equipment foreign to the electrical equipment will not be located in, enter, or pass through such spaces or rooms. Where practicable in finished areas of hospitals, panelboards, signal and communication cabinets will be grouped, surface-mounted, in separate electrical and communication ventilated wiring closets. Joint use closets are not acceptable and will not be provided. Closets in which dry-type transformers and—automatic transformer type regulators are installed, should be located away from noise sensitive areas and provided with adequate ventilation to maintain an ambient temperature not to exceed 86 degrees F. For hospitals with more than three floors, electrical and communication closets should be stacked vertically whenever practicable. Panelboards in critical care areas will be located in the vicinity of their loads, and will

be accessible to the operating staff only. Such panelboards will not be located in the patient bedrooms.

10.4.1.4 ELECTRICAL ROOMS. A minimum of one branch circuit electrical room shall be provided for each smoke zone of a hospital building space, and each 22,500 square feet (2025 square meter) of other medical facilities building space. The footprint for each piece of equipment with working space, and NFPA-70 clearance requirements shall be shown. No branch circuit electrical room will feed loads beyond the smoke zone in which it is located. The branch circuit electrical rooms will be accessed off of a primary through corridor, and the entry door or doors will swing 180 degrees as not to impede traffic flow in the corridor or violate clearance requirements of NFPA-70. In multi-story medical facilities, the branch circuit electrical rooms should be stacked. A minimum of 20 percent additional free wall space should be provided to accommodate customer flexibility requirements.

10.4.2 CONDUIT, CABLE TRAY AND WIRE. All wiring will be insulated copper in conduits and installed per NFPA-70 and MIL-HDBK 1190. Metal enclosed feeder, plug-in busways or surface metal raceway may be used. A green insulated copper ground conductor will be run with all branch circuits. Wiring in all patient care areas and the life safety branch and critical branch of the essential electrical system will consist of insulated conductors installed in a separate metallic raceway. Where cable trays are used the normal and emergency power conductors will be in separate compartments. Cable and raceway circuit identification shall be at each end and at all transitions.

10.4.2.1 Conductors installed to furnish emergency power will not be installed in the same raceway with normal power conductors.

10.4.2.2 All normal and emergency power junction boxes, pull boxes and similar parts will be readily accessible. Clearly identified access panels will be installed as necessary for proper maintenance and operation of the electrical distribution system.

10.4.3 BRANCH CIRCUITS. All circuits serving patient care areas shall comply with NFPA-99 and 70 except where reference criteria requires more stringent standards.

10.4.4 WET TREATMENT AREAS. Circuits serving "wet" treatment locations, see subparagraph 10.4.7.9.a, “WET LOCATIONS,” will be furnished with ground fault interrupters. Ground fault interrupters on circuits serving life support equipment will not be installed,as required by NFPA-99 and 70.

10.4.6 RADIOLOGY PROVISIONS.

10.4.6.1 X-RAY FEEDER. Radiographic or fluoroscopic equipment will be supplied by a 3-phase, 5 wire neutral and ground, 480Y/277 volt feeder from the main distribution switchboard to an enclosed circuit breaker disconnect located adjacent to the associated X-ray control room. X-ray loads will not be included in the demand load. Effect of X-ray unit momentary kVA load on transformer voltage regulation will be evaluated. Transformer size will be increased as necessary and feeders sized for satisfactory system performance. Separate service transformers to the X-ray units will not be provided. A door interlock system will be provided to prevent production of X-rays when any X-ray room door is open. Magnetic type door switches, and conduit and wiring from the switches to the control console will be provided. Doors immediately adjacent to the control room may not be required to be part of the interlock system. A single phase 120/208 volt branch circuit panelboard will be provided in each room for X-ray unit peripheral equipment. Additional electrical design requirements are contained in the (Universal) x-ray room criteria portion of the Section Medical and Dental Equipment and Appendix "B”.

10.4.6.2 MOBILE X-RAY UNIT OUTLETS. Mobile X-ray equipment in nursing units will normally be battery operated. Duplex receptacles rated 20-ampere,

125-volt for battery recharging will be provided in designated areas. Should battery operated units not be used as determined by the Using Service, each nursing unit corridor will be provided with 60-ampere, 250-volt, 2-pole, 3-wire, single phase, twist lock, grounding type flush mounted receptacle. Mobile X-ray unit loads will not be included in demand load.

10.4.7 RECEPTACLES. Receptacles will be provided as follows.

10.4.7.1 GENERAL PURPOSE RECEPTACLES. General purpose multi-outlet branch circuits will be rated 20-amps with convenience straight blade type receptacles rated 20-ampere, 125-volt, 2-pole, 3-wire, grounded type. All other receptacles including those dedicated to medical equipment will not be of less than 20-ampere rating. Receptacles will normally be straight blade type.

Provide a minimum of one general purpose 20-amp, 125 volt duplex receptacle outlet per wall in each room. In rooms where walls exceed 3 meters, provide an additional duplex outlet for each additional 3 meter of wall space fraction there of. Receptacle spacing shall not exceed 3.5 meters. The general purpose receptacles are in addition to the special purpose and dedicated outlets for special equipment. Do not provide receptacles in public toilets, staff toilets outside of the command areas and janitor closets.

10.4.7.2 HOSPITAL GRADE RECEPTACLES. Hospital grade receptacles will only be provided where required by NFPA-70 and as defined below. Final design electrical drawings will indicate "Hospital Grade" (HG) receptacles in the following locations Provide Specifications Grade Heavy Duty receptacles in all other locations:

a. General care patient bed locations.
b. Critical care patient bed locations.
c. Any location where a patient bed or patient care service console is located.
d. Anesthetizing locations:
   (1) Operating Rooms.
   (2) Delivery Rooms.
   (3) Oral surgery.
   (4) Cystoscopy (in Operating rooms and Clinics).
   (5) Cardiac Catheterization Lab.
   (6) Angiography / Special Procedures.
   (7) CT Scanning Room.
   (8) MRI Scanning Room.
   (9) Medical Maintenance.
   (10) Intensive Care.
   (11) Emergency Trauma Rooms.
   (12) Fluoroscopy Rooms.
   (13) Endoscopy Rooms.
   (14) Pulmonary / Respiratory Therapy.
   (15) Nuclear Medicine.

10.4.7.3 DUPLEX RECEPTACLES. Not less than one duplex receptacle will be provided in each wall of all rooms and interior areas, except closets, scrub rooms, toilets and similar spaces. Electrical closets will be furnished with not less than one duplex receptacle from a dedicated 20 ampere, 125 volt branch circuit. Communication closets will be furnished with 20 ampere, 125 volt duplex receptacles on each wall and power will be supplied by two dedicated 20 ampere branch circuits on the same phase. (Additional communication closet criteria can be found in Section 11.). One duplex receptacle will be provided per every 3 linear feet of casework in nurse's stations, subnurse's stations, reception counters, and control counters. Each administration type desk location will be provided with two duplex receptacles. Each data workstation will be provided with an additional identified duplex outlet. Each data outlet device plate will be marked "data power" with a steel stamp or silk screened 1/4 inch high letters.Circuits for

data outlets will be an independent single phase 20 ampere, 125 voltcircuit serving not more than four duplex receptacles and having a non-shared neutral. Where a 20 ampere, 125 volt receptacle is incorporated in the same metal box with a television or data outlet, a partitioned metal box with separate power and signal conduits will be provided as required (Criteria can be found in Chapter 11, "Communications."). See Guide Plates for requirements in special areas.

10.4.7.4 SAFETY RECEPTACLES. Hospital Grade tamper resistant receptacles will be provided in all hospital areas occupied by children, including playrooms, baths, toilets, pediatric waiting and pediatric bedrooms. Receptacles in psychiatric seclusion rooms (patient care areas, wards and rooms) will also be of the hospital grade tamper resistant type. The safety receptacles used in these areas will be designed to prevent shock hazards from metallic objects which might be inserted in the receptacle slots.

10.4.7.5 MAINTENANCE RECEPTACLES. Floor maintenance receptacles located in corridors will be flush mounted and will not be of less than 20-ampere rating. Determination of receptacle type, voltage, current rating, and spacing will be coordinated with the Using Service to provide the best utilization of existing floor maintenance equipment. Provide receptacles within 25 feet of all installed equipment which requires maintenance.

10.4.7.6 BACK-TO-BACK RECEPTACLES. Outlets installed back-to-back through walls will be permitted only in rooms or areas where sound control or fire rating integrity is not required.

10.4.7.7 RECEPTACLE IDENTIFICATION. Receptacles connected to the emergency system will be red and may be furnished with either metal or plastic plates. Metal plates will be finished in baked enamel and acrylic plastic plates will be impact resistant with integral color. Each device plate will be marked "EMERGENCY" and will identify the panelboard and circuit number at the top with steel stamped or silk screened letters not less than 1/4 inch high Indentation of the steel stamp will be filled with black enamel or acrylic paint. Silk screened letters will also be of black enamel or acrylic paint. Pressure sensitive tapes with markings are not acceptable.

10.4.7.8 250 VOLT RECEPTACLES. All 250 volt receptacles will be furnished with matching plugs.

10.4.7.9 GROUND FAULT CIRCUIT INTERRUPTERS (GFCI). Hospital Grade Class "A"GFCI receptacle protection will be provided at locations required by NFPA-70 and "WET" locations. GFCI "WILL NOT BE PROVIDED" on circuits serving critical life support equipment.

10.4.7.9.a WET LOCATIONS. Those areas that are normally subject to wet conditions, including standing water on the floor, or routine dousing or drenching of the work area are classified as a wet location. Routine housekeeping procedures and incidental spillage of liquids do not define a wet location. GFCI receptacles will be used in the following locations:

1. Hydrotherapy.
2. Therapeutic pool areas.
3. Toilet areas with showers.
   (a) Staff lockers with toilet areas.
   (b) Patient toilet bathrooms.
4. Showers.
5. Staff lounge with kitchen facilities.
6. Outdoor receptacles.
7. Other locations required by NFPA-99.
8. Receptacles accessible from a building roof.
9. Crawl spaces.

10.4.7.9.b DAMP LOCATIONS. Damp locations are functional areas infrequently

using liquids in operational activities and housekeeping procedures but require special attention such as Toilets, Locker areas which are adjacent to showers areas, Sub-sterile and Scrub areas to Surgery and Delivery and so forth. GFCI receptacles are not required.

10.4.7.10 PATIENT BEDROOMS. Critical care patient bed locations will be provided with a minimum of eight identified duplex receptacles, and general care patient bed locations will be provided with a minimum of four duplex receptacles. Receptacle adjacent to the wash basin in patient bedroom toilets shall be provided with ground fault circuit interrupter protection for personnel. All receptacles will be hospital grade.

10.4.7.11 RENAL DIALYSIS UNITS Two identified hospital grade receptacles shall be provided on each side of the patient bed or lounge chair. Provide one or more normal and emergency critical branch powered receptacles.

10.4.7.12 NURSERIES. Each intensive care nursery provided with 16 simplex receptacles. Each intermediate care nursery will be provided with eight simplex receptacles. Each nursery in admission, observation, and continuing care will be provided with four simplex receptacles. Normal care nurseries will be provided with one simplex receptacle. Receptacles will be 20-ampere, 125-volt, 2-pole, 3-wire, straight blade, grounded type. Floor mounted receptacles will not be used. Ceiling mounted receptacles or groups of receptacles should be considered for nursery locations not adjacent to a wall or column. A minimum of one 60-ampere, 250-volt, 2-pole, 3-wire, twist lock, grounded type, flush mounted receptacle for mobile fluoroscopy unit will be provided in each nursery.

10.4.7.13 OPERATING ROOM AND DELIVERY ROOM. Each operating and delivery room will be provided with 36 simplex or duplex receptacles, 12 in each service column, and six on each wall mounted 3 feet above floor. Receptacles will be 20-ampere, 125-volt, 2-pole, 3-wire, straight blade, grounded type. Each operating and delivery room will also be provided with one 60-ampere, 250-volt, 2-pole, 3-wire, twist lock, grounded-type flush mounted receptacle for mobile fluoroscopy unit or laser photo coagulator.

10.4.7.15 LABORATORY RECEPTACLES. Above laboratory benches, 20 ampere duplex receptacles will be strip mounted 18 inches on center. Install strips of multi-outlet assemblies above laboratory bench countertops, with 20-ampere duplex receptacles placed 500 mm (18-inches) on center, or closer. Adjacent duplex receptacles will be connected to different circuits and not more than two duplex receptacles will be connected to each circuit.

10.4.8 PATIENT CARE AREA GROUNDING. General care areas and critical care areas including all anesthetizing locations will be provided with a grounding system as required by NFPA-99 and 70. Grounding system design and initial testing will be included in the contract documents.

10.4.9 INHALATION ANESTHETIZING LOCATION. All inhalation anesthetizing locations will be classified and designed as a nonflammable inhalation anesthetizing location. Operating rooms, delivery rooms, oral surgery, cardiac catheterization and other special procedure rooms are not considered wet areas. Isolated power systems will not be provided except for areas designated as critical care wet areas by the Using Service. Ground fault circuit interrupters will not be provided. Design will conform to the requirements of NFPA-70 and 99. Each operating and delivery room will be provided with two three phase panelboards located within the room. Each panel will be fed from a separate critical branch subpanel and whenever practicable from separate critical branch automatic transfer switches. Panels will be connected to the same phase. Grounding in inhalation anesthetizing locations will be in accordance with paragraph "Patient Care Area Grounding" above.

10.4.9.1 FLAMMABLE ANESTHETIZING LOCATION. Flammable anesthetizing locations may only be used for training in major teaching medical centers and

only after approval has been obtained from TMA/DMFO by the using Military Department.

10.4.10 ELECTROMAGNETIC SHIELDING FOR MEDICAL INSTRUMENTATION. Designated areas of hospitals and health research laboratories may require electromagnetically shielded enclosures. The degree of the attenuation required for the enclosure will be based on the manufacturer's recommendation for the instrumentation to be used in the designated space. Shielded enclosures will conform to the requirements of MIL-E-8881. Final design will specify the type of enclosure and the class of attenuation required. When shielded enclosures are not provided, other measures will be taken to limit RFI and EMI in rooms which contain sensitive medical equipment, including the EEG room and electron microscope room. Incandescent lighting fixtures will be used. Rooms will not be located near or directly above or below electrical equipment or mechanical rooms. High voltage feeders will not be routed in the vicinity of these rooms.

10.5 LIGHTING.

10.5.1 DESIGN . Lighting design will conform to the requirements of these standards. Electronic ballast are not recommended in areas of medical facilities where electronic (life support) medical equipment is used or areas where invasive procedures are performed, due to possible interference with the equipment. Some examples are operating rooms, delivery rooms, laboratories, special procedure rooms, MRI areas, Medical equipment repair and test areas and other areas of similar use. In no instance shall the lighting footcandle level exceed plus 10 percent for 538.7 Lux (50 footcandles) and plus 53.8 lux (5 footcandles) percent for lower levels. Emergency egress lighting will conform to the requirements of NFPA 101 and the exit lighting will conform to the following requirements:

a. Stencil faced exit signs are recommended.
b. The transilluminated letters will normally be red except where state or country standards mandate green.
c. The contrast level of the letters shall be symmetrical with not less than a 0.7 value, plus or minus 5 percent.
d. The lumination output for normal and emergency mode will be not less than 70 cd/sq m. measured across the face of the sign.
e. The surface finish shall be a matte texture.
f. LED exit signs must meet the above performance criteria and carry a manufacturers certificate of compliance.

Lighting design and switching will incorporate energy efficient features whenever practicable and consistent with lighting criteria and the functional/operational intent of the hospital. Fluorescent lighting will be provided to the maximum amount practicable, except that infrequently used small storage spaces and janitor's closets may be provided with incandescent fixtures. Exterior lighting will normally be high pressure sodium vapor fixtures. Recessed fluorescent fixtures will be provided in rooms with lay-in acoustical tile ceilings. Fluorescent fixtures may be recessed or surface mounted in rooms with gypsum board on plaster ceilings. Industrial type or open strip type fluorescent fixtures will generally be used in rooms with unfinished ceilings. Fixtures in large storage/supply rooms will be mounted to readily permit relocation within several feet. Fluorescent lamps will normally be 34/40 watt energy saving or 32 watt T8, cool white type, except that 32 or 40-watt chroma 50 type color corrected lamps may be used. Normally, 32 or 40-watt lamps on dimming circuits will be provided as required by Appendix "A" and as indicated herein. Lighting fixtures with color improved lamps will be identified for lamp replacement by an appropriate marking on the fixture reflector. Marking should indicate lamp replacement with the actual design lamp by name only and should not be visible through the

fixture lens. Fluorescent lamps of the U-Tube type should not be used. Use of HID fixtures in patient care areas is not permitted. Refer to Section 7, "ENERGY and WATER CONSCIOUS DESIGN," for energy conscious design considerations.

10.5.2 BATTERY OPERATED LIGHTING. Fifteen to 25 percent of the general lighting in the operating rooms, obstetrical delivery rooms, emergency treatment rooms, cystoscopy, and cardiac catheterization rooms and any other room with invasive procedures will be provided with 1 and 1/2 hour battery backup for general illumination which will operate without interruption during periods of normal and emergency power lapse. All permanently installed surgical task light fixtures will be provided with no-break power to bridge the power interruption between loss of normal power and the transfer to emergency power. Batteries for lights in operating and delivery rooms will be located outside those rooms. Fifteen percent of lighting in nurseries will be provided with 1 and 1/2 hour battery backup. Battery capacity may be reduced to 1/2 hour illumination if backed-up by two or more emergency generators. A minimum of 1 battery powered light will be provided in the generator set and emergency switchboard location and central communications room.

10.5.3 PATIENT BEDROOMS. In patient bedrooms, one wall mounted direct/indirect lighting fixture or a medical wall module system, with lighting features as described herein, will be provided at each bed. Each unit will include upward directed fluorescent lamps for general illumination and downward fluorescent lamps for patient use. The upper fluorescent lamps will be controlled at the door and at the wall unit with a three-way switch. The lower fluorescent lamps for each patient's use will be switched at the bed. All switches will be of the quiet-operating type. Use of low voltage switching utilizing the nurse call handset will be considered. Night lights mounted in the patient service console will be provided at each bed and will be photo cell controlled and manually controlled at the corridor door.

10.5.4 OTHER ROOMS. Fixtures in nurseries, surgery, obstetrical suites, emergency treatment rooms, examination rooms, and laboratories will be recessed fluorescent type. Nurse station lights will be switch controlled to achieve 33, 66, and 100 percent illumination levels. Corridor lights adjacent to intensive care bedrooms and nursing unit will be one-third increment switch controlled. In recovery rooms, coronary and intensive care units and X-ray therapy rooms, where patients may be in a supine position for extended periods, low-brightness diffused lighting will be provided. For examination purposes in intensive care units, isolation rooms, single patient bedrooms, labor rooms and recovery, a four-lamp fluorescent lighting fixture, operated by a conveniently located switch, will be provided above each bed. Fixtures in seclusion rooms will be of the recessed incandescent type, of tamperproof construction with impact-resisting tempered lenses. Seclusion rooms will be provided with tamper resistant incandescent night lights. Darkrooms will be provided with an incandescent photographic safelight in addition to the normal white light for general room illumination. The safelight is normally considered an item of medical equipment. The "darkroom in use" light, located outside and above the darkroom door, will be controlled by the switch which controls the safelight in the darkroom. The "darkroom in use" light is not required at light-tight type doors. For darkrooms with film loading bins, bin drawers will be interlocked with darkroom white light and safelight so that when a bin drawer is opened, white light is extinguished and safelight remains lit. X-ray rooms will be provided with indirect lighting. The location of X-ray room lights must be coordinated with X-ray equipment. Therapeutic X-ray rooms will be provided with an "X-ray In-Use" light, located outside and above each door. The "X-ray In-Use" light will be controlled by the X-ray unit on-off line power controller. Conduit and wiring from the "X-ray In Use" light to the X-ray unit control console will be provided. Diagnostic X-ray rooms will not be provided with "In-Use" lights. Electroencephalogram rooms will be provided with dimmed incandescent fixtures, refer to Section 16 for more details.

10.5.5 DENTAL CLINIC. Ceiling mounted fluorescent lighting fixtures will be symmetrically arranged within all finished areas except open dental operatories. In such operatories, fixtures will be concentrated above the dental chairs. Lighting intensities at the working surface in each dental operatory will be not less than 1076 Lux (100 footcandles) nor more than 1614.4 Lux (150 footcandles) with a minimum of 2 level switching circuits. Where color matching is a critical function, such as in the prosthetics laboratory and dental treatment rooms, color improved fluorescent lamps will be specified.

10.5.6 EXTERIOR SIGNAGE. Exterior signage for "EMERGENCY SERVICES" will be stencil-faced with red transilluminated letters, and will be readily visible, identifiable, and legible at all entrance drives. The contrast level of illuminated signage shall be symmetrical and not deviate more than plus or minus 5% percent. Signage for facilities having after-dark operations will have transilluminated letters indicating the facility name. Illuminated signs will be designed for rapid replacement(time not to exceed 15 minutes). Sign location will be coordinated with illumination of access roads, parking areas, and building entrances to minimize requirements for additional illumination of signage.

10.5.7 PARKING AREAS AND WALKS. Normal site areas intended for night use will be illuminated by an average of 5.38 Lux (0.5 footcandles) and 10.76 Lux (1 footcandle) for handicap areas, measured on 1 foot intervals, of incident light on the area served. Parking areas will be illuminated with high pressure sodium fixtures equipped with lamps with dual restrike elements.

10.5.8 DIMMING. Eye lane and eye examination room and group therapy observation room illumination will be furnished with recessed fluorescent fixtures and dimmable incandescent fixtures. Switches and dimmers for eye lane and eye examination room will be located close to the examination chair. Maximum footcandle level in group therapy observation room with respect to footcandle level in group therapy (mirror) room should not exceed manufacturer's recommended ratio for one-way mirrors utilized. Fluorescent general lighting in fluoroscopic and radiographic special procedures rooms will be dimmed at the control stand or at the door entrance, as required.

10.5.9 ULTRAVIOLET FILTERS (UV) UV filters shall be provided in infant care areas to prevent retina damage to premature infants and other areas where cataracts are of a major concern.

10.5.10 MAINTENANCE AREA LIGHTING. Interior utility tunnels and walk-in pipe chases will be illuminated by one footcandle of incident light for the safety of maintenance personnel. Switches for these lights will be equipped with pilot lights and located in areas that are normally occupied. Receptacles for temporary work lights will be located at reasonable intervals.

10.5.11 AUDITORIUM. The down light fixture over the podium will be controlled from the podium and the entrance.

10.5.12 HELIPAD LIGHTING, MARKING AND CONTROLS. Where helipad lighting is required for night operations in visual meteorological conditions (VMC), the lighting will be designed to ANNEX A criteria Perimeter, limit, floodlights, glide slope indicator, wind-indicator and rotating beacon aviation lighting systems will be incorporated into the design. When marking the helipad for day time operations retroreflective paint markings in Figure 10-2 will be used. Lighting will be connected to the essential power supply. See Chapter 2 for site requirements and ANNEX A for "HOSPITAL HELIPAD SYSTEM REQUIREMENTS." The center perimeter light on each side and the wing-out light are red to symbolize the nighttime international Red Cross symbol. The lighting controls may be pilot and/or hospital radio controlled, or manual at helipad site.

10.6 LIGHTNING PROTECTION. Facility lightning protection requirements will be assessed per NFPA-780. Where lightning protection is required; it will

be a UL Master Labeled System.

TABLE 10-1 APPLICABLE REFERENCES

ITEM:	REFERENCE NO:	TITLE OR DESCRIPTION:
1.	MIL-HDBK-1190	FACILITY PLANNING AND DESIGN GUIDE
2.	NFPA-30	FLAMMABLE AND COMBUSTIBLE LIQUIDS CODES
3.	NFPA-37	STANDARDS FOR THE INSTALLATION OF COMBUSTION ENGINE AND GAS
4.	NFPA-70	NATIONAL ELECTRICAL CODE
5.	NFPA-99	STANDARDS FOR HEALTH CARE FACILITIES
6.	NFPA-101	LIFE SAFETY CODE
7.	NFPA-110	EMERGENCY AND STANDBY POWER SYSTEMS
8.	NFPA-780	LIGHTNING PROTECTION CODE
9.	ANSI-C2	NATIONAL ELECTRICAL SAFETY CODE
10.	ANSI Y32.2	GRAPHIC SYMBOLS FOR ELECTRICAL AND ELECTRONICS
11.	MIL-HDBK-419	GROUNDING, BONDING AND SHIELDING FOR ELECTRICAL EQUIPMENT AND FACILITIES (VOL I and II)
12.	MIL-HDBK-1013/1A	DESIGN GUIDANCE FOR PHYSICAL SECURITY OF FACILITIES
13.	MIL-HDBK-1008	FIRE PROTECTION
14.	IEEE C62.41.91	IEEE RECOMMENDED PRACTIC ON SURGE VOLTAGE IN LOW VOLTAGE AC POWER CIRCUITS
15.	IEEE STANDARD 142	IEEE RECOMMENDED PRACTICE FOR GROUNDING OF INDUSTRIAL AND COMMERCIAL POWER SYSTEMS
16.	IEEE STANDARD 241	IEEE RECOMMENDED PRACTICE FOR ELECTRIC POWER SYSTEMS IN COMMERCIAL BUILDINGS
17.	IEEE STANDARD 242	IEEE RECOMMENDED PRACTICE FOR PROTECTION AND COORDINATION OF INDUSTRIAL AND COMMERCIAL POWER SYSTEMS
18.	IEEE STANDARD 399	IEEE RECOMMENDED PRACTICE FOR INDUSTRIAL AND COMMERCIAL POWER SYSTEM ANALYSIS
19.	IEEE STANDARD 446	IEEE RECOMMENDED PRACTICE FOR EMERGENCY AND STANDBY POWER SYSTEMS
20.	IEEE STANDARD 493	IEEE RECOMMENDED PRACTIC FOR THE DESIGN OF INDUSTRIAL AND COMMERCIAL POWER SYSTEMS.
21.	IEEE STANDARD 519	IEEE RECOMMENDED PRACTICE AND REQUIREMENTS FOR HARMONIC CONTROL IN ELECTRICAL POWER SYSTEMS.
22.	IEEE STANDARD 602	IEEE RECOMMENDED PRACTICE FOR ELECTRICAL SYSTEMS IN HEALTH CARE FACILITIES.
23.	IEEE STANDARD 1100	IEEE RECOMMENDED PRACTICE FOR POWER SYSTEM AND GROUNDING SENSITIVE ELECTRONIC EQUIPMENT.

24.	EIA/TIA 568A	COMMUNICATION BUILDING TELECOMMUNICATIONS STANDARD
25.	EIA/TIA 569A	COMMUNICATION BUILDING STANDARD FOR TELECOMMUNICATIONS PATHWAYS AND SPACES.
26.	EIA/TIA 606	ADMINISTRATION STANDARD FOR TELECOMMUNICATIONS INFRASTRUCTURE OF COMMERCIAL BUILDING
27.		ILLUMINATION ENGINEERING SOCIETY LIGHTING HANDBOOK

ANNEX A
HOSPITAL HELIPAD SYSTEM REQUIREMENTS

1. GENERAL. This criteria is intended to augment the requirements of other Army, Air Force, and Navy aviation lighting and marking criteria by covering those requirements unique to hospital helipads. Standards, which have been established for general airfield use, shall be followed where applicable.

2. DEFINITIONS:

a. HELIPAD. A prepared surface area for fixed facilities or marked turf area for temporary facilities centered within a clear landing area used for takeoff and landing helicopters.

3. SPECIAL CRITERIA:

a. LIGHTING.

(1) PERIMETER. The specific hospital helipad perimeter lighting pattern is illustrated in attached Figure 10-3, HOSPITAL HELIPAD LIGHTING PATTERN, and defined for visual meteorological conditions (VMC) operations in attached TABLE 10-3, HOSPITAL HELIPAD LIGHTING REQUIREMENTS. Spacing, installation and other criteria and standards can be found in Army, Air Force, and Navy aviation criteria.

(2) FLOODLIGHTING. Helipad floodlighting shall be in accordance with using service (Army, Air Force, and Navy) aviation criteria. TABLE 10-3.

(3) LIMIT LIGHTS. Limit lights shall be in accordance with using service (Army, Air Force, and Navy) aviation criteria.

(4) VISUAL GLIDE SLOPE INDICATOR SYSTEM (VGSIS). The VGSIS shall be a two box Chase Helicopter Approach Path Indicator (CHAPI) as required by attached TABLE 10-3. Other guidance can be found in the using service (Army, Air Force, and Navy) aviation criteria.

(5) ROTATING BEACON. The hospital rotating identification beacon shall be specified in accordance with STD DET 40-06-05 and installed per using service (Army, Air Force, and Navy) aviation criteria.

(6) WIND INDICATOR. The wind indicator shall be illuminated in accordance with using service (Army, Air Force, and Navy) aviation criteria.

b. RADIO CONTROLLER. The radio controller shall be in accordance with FAA - AC150/5345-49A, "SPECIFICATION L-854, RADIO CONTROL EQUIPMENT," and function as follows:

RADIO CONTROL OPERATION.

The pilot can activate the hospital helipad lighting by keying the microphone from the helicopter after tuning to the assigned frequency.

The pilot can key his microphone three times within a five second interval and on the third pulse a relay is energized which turns on the wind indicator illumination, CHAPI and the perimeter light pattern.

The floodlights can be activated by keying the microphone five times.

The light will remain on until the pilot keys his microphone seven times. This will activate the turn off time delay relay which de-energize the lights at the end of the 15 minute delay.

When the lights have been activated by the radio controller the "OFF" function of the remote "ON-OFF" switch in the manual controller, located in the

hospital ER, will be bypassed.

The brightness of the CHAPI, floodlights and perimeter lights can only be controlled from the manual control panel in the ER.

If the microphone has been keyed seven times, turn off signal, the radio controller can be reset by keying the microphone three or five times.

The hospital ER shall be equipped with the manual controller (SEE attached FIGURE 10-4, HOSPITAL HELIPAD LIGHTING CONTROL DIAGRAM) and a base radio station to be capable of manual or radio operations.

4. DAY MARKING OF HELIPAD. Day marking of the hospital helipad shall be in accordance with attached FIGURE 12-2, HOSPITAL HELIPAD DAY MARKING.

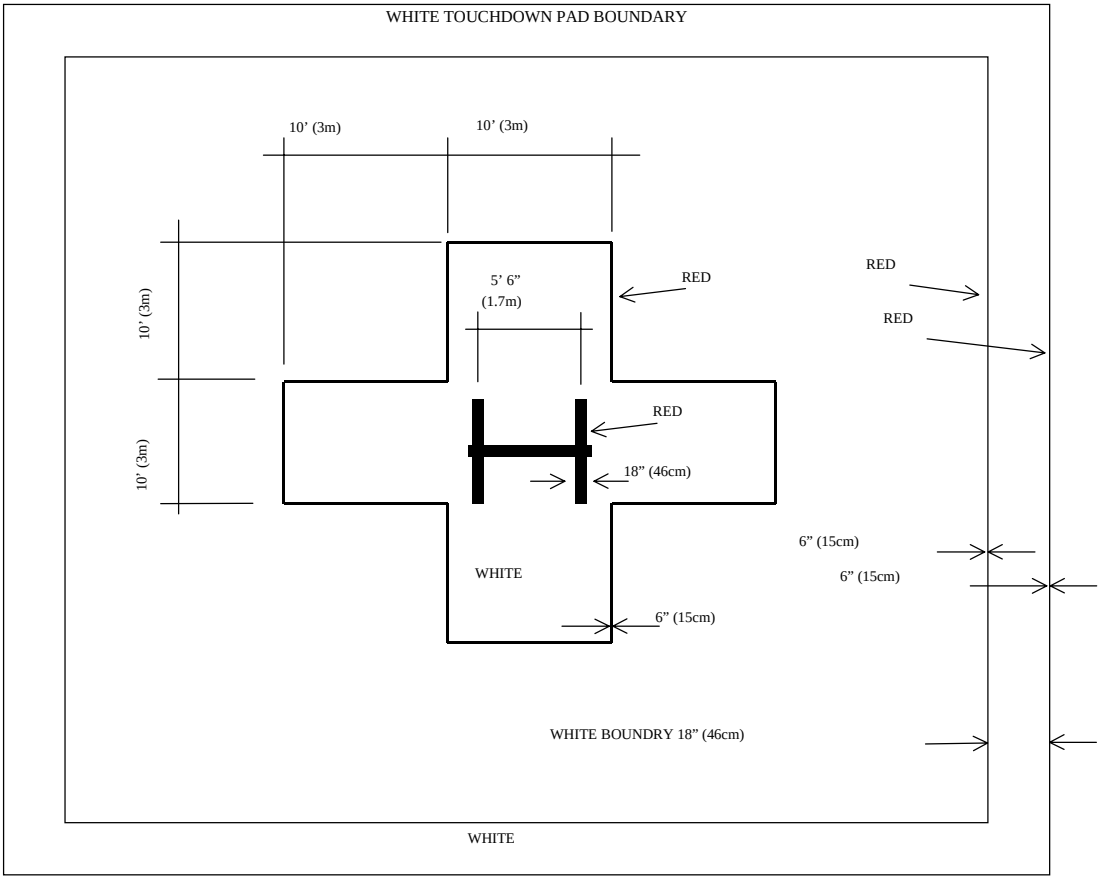

HOSPITAL HELIPAD DAY MARKING

1. The cross and touchdown pad boundary markings are white and may be edged with a 6-inch (15cm) red border to improve visual acquisition. The 10 foot (3m) high letter "H" is red.

2. The touchdown pad boundry marking may be either a solid or segmented line.

3. Retroreflective paint shall be used for day marking (Red 11350 and White TT-P-85E or TT-P-1952).

FIGURE 10-2. HOSPITAL HELIPAD DAY MARKING

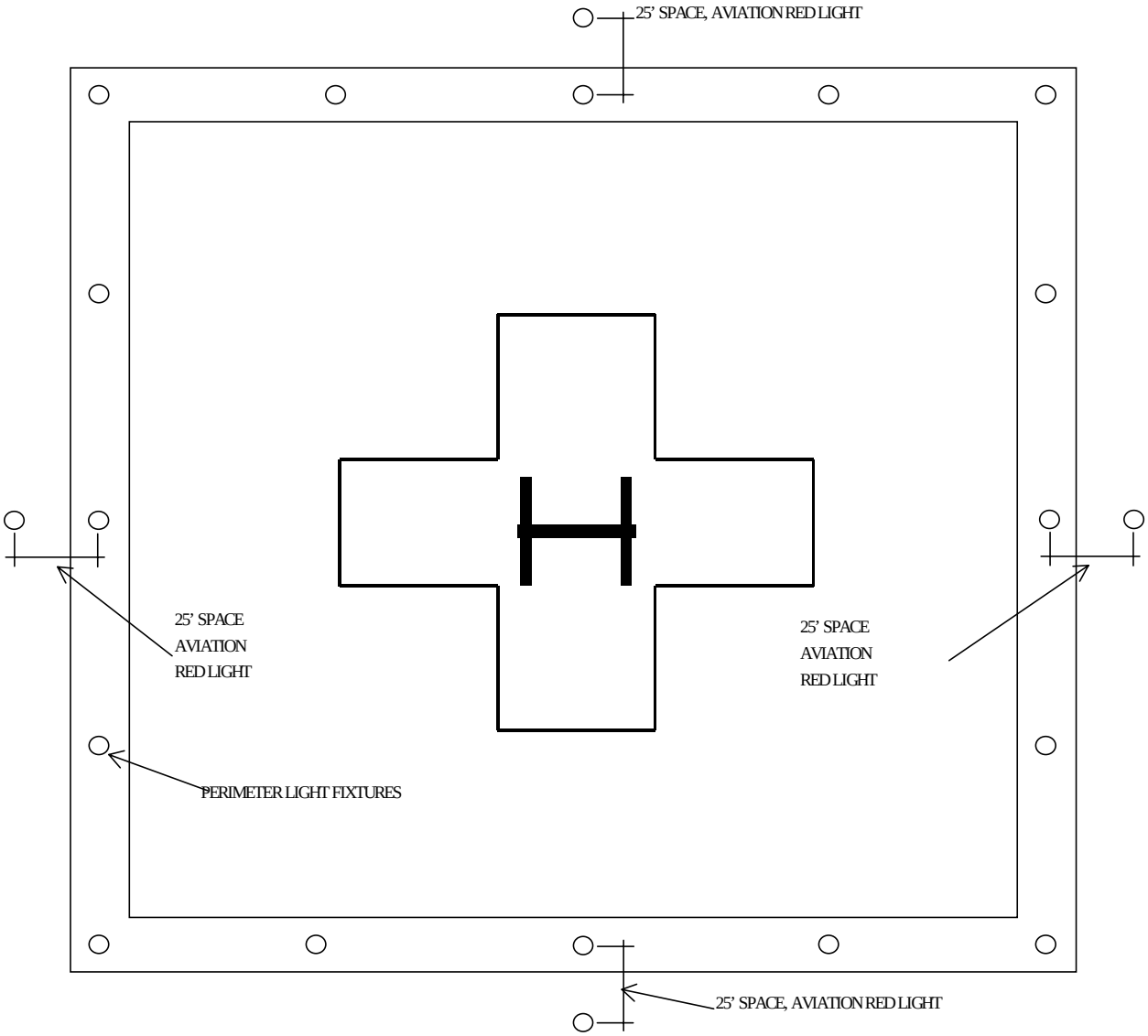

HOSPITAL HELIPAD LIGHTING PATTERN

1. All perimeter lights are aviation yellow, Except for those identified above as aviation red. The spacing criteria between perimeter fixtures is covered in other using service (Army, Air Force, and Navy) aviation criteria.

2. Types of aviation light fixtures are covered in STD DET 40-06-05, ARMY AVIATION LIGHTING FIXTURES and other using service (Air Force, and Navy) aviation criteria.

FIGURE 10-3. HOSPITAL HELIPAD LIGHTING PATTERN

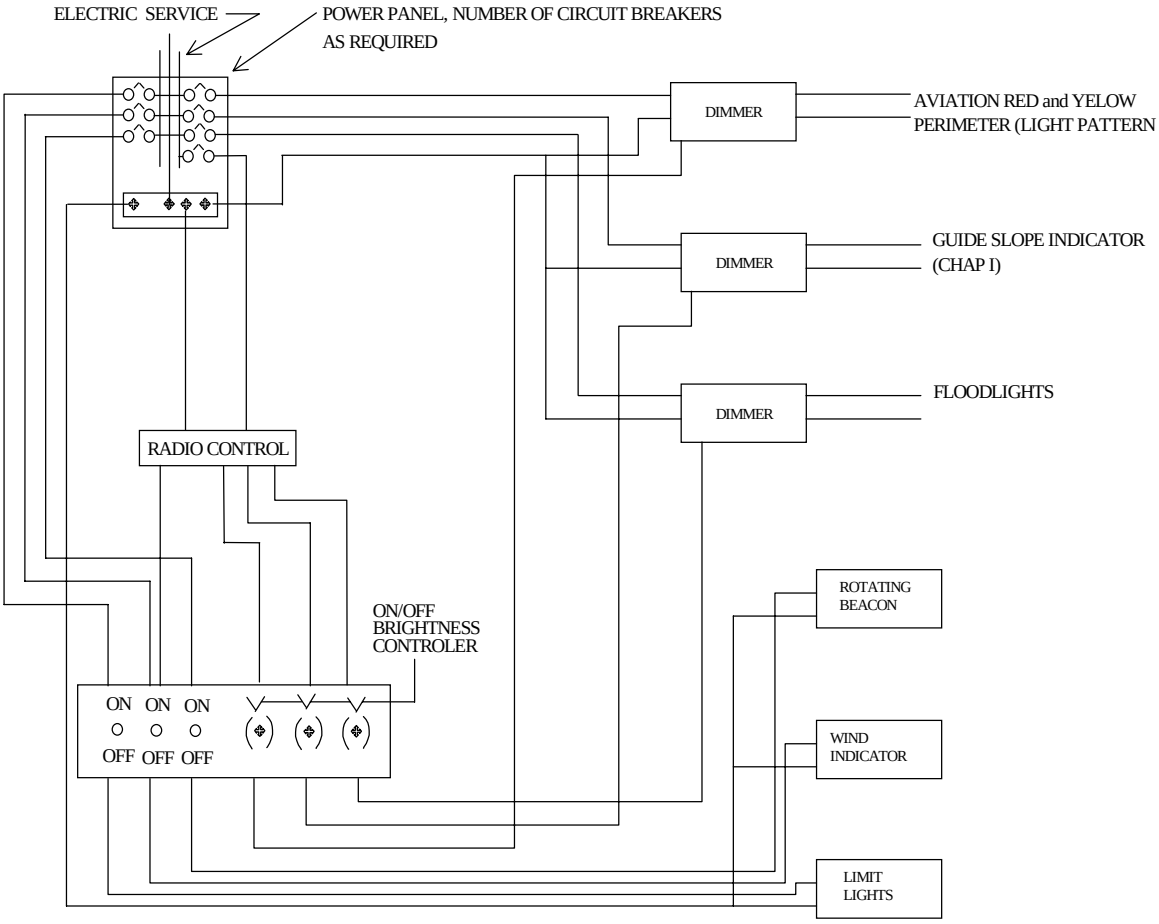

FIGURE 10-4. HOSPITAL HELIPAD LIGHTING CONTROL DIAGRAM

TABLE 10-3
HOSPITAL HELIPAD LIGHTING REQUIREMENTS

FACILITY	DAY VMC NON-INSTRUMENT	DAY and NIGHT VMC NON-INSTRUMENT	FIXTURE TYPE
Aviation Red, Perimeter Omnidirectional Pattern Lights	O	X	SEE STD DET 40-06-05
Aviation Yellow Perimeter Pattern Lights	O	X	SEE STD DET 40-06-05
Floodlights Lights	X	X	SEE STD DET 40-06-05
Limit Lights	O	O	SEE STD DET 40-06-05
Wind Indicator	X	X	SEE STD DET 40-06-05
Rotating Beacon	X	X	SEE STD DET 40-06-05
Glide Slope Indicator (CHAPI)	O	X	SEE STD DET 40-06-05
DAY MARKING RETROREFLECTIVE PAINT	X	X	SEE FIGURE 10-2
CONTROLS	X	X	SEE FIGURE 10-4
EMERGENCY POWER	X	X	SEE PARAGRAPH 10.5.12

NOTES:

X - REQUIRED
O - OPTIONAL

SEE TM 5-811-5, "ARMY AVIATION LIGHTING," for technical requirements, or other using service (Air Force, and Navy) aviation criteria.

SEE STD DET 40-06-05, "ARMY AVIATION LIGHTING FIXTURES," for fixture application type or using service (Air Force, and Navy) aviation criteria.

.

TABLE 10-4
SAMPLE NONLINEAR LOAD ANALYSIS MATRIX

SERVICE MODULE TYPE	TOTAL RECEPT KVA	ESTIMATED NONLINEAR KVA	MODULE XFMR SIZE	NONLINEAR % OF TOTAL KVA	XFMR K FACTOR RATING
Clinic					
Logistics					
Dentistry					
Pulmonary					
ICU					
Surgery					
Food Service					
Labor/Delivery					
CCU					
ICU					
Orthodontics					
Physical Therapy					
CMS					
Nuclear Medicine					
Emergency					
Waste Management					
Materials					
Radiology					
Collecting Labs					
Pathology					
Chemistry Labs					
Pharmacy					
Social Work					
Auditorium					
Patient Services					
Nursing (3 Mods)					
Administration					

ANNEX B
MULTI-ENDED NETWORK SUBSTATION

1. GENERAL. The multi-ended network (FULLY AUTOMATIC) substation (Figure 10-5 and 10-6) design philosophy eliminates many switching time delays; simplifies the monitor and control functions; standardized equipment; reduces equipment size; provides expansion capability for future load growth and maintains reliability, durability, and maintainability. When using the multi-ended network or the double-ended substation to replace an existing substation, all down stream equipment requires short circuit current validation, and power system coordination.

2. NORMAL HOSPITAL SOURCE ALTERNATE DESIGN CONFIGURATION. For electrical design criteria related to power supply, see documents listed in “TABLE 10-1 APPLICABLE REFERENCES." Hospitals will be served by two primary service feeders each connected to one side of the automatic (with alternate manual operator) load break primary selector switch with manual load break by-pass isolation switches that serves a multi-ended network substation (Figure 10-5). Each feeder shall have the capacity to serve the full hospital demand plus 20 percent spare load growth, and shall be installed underground within the hospital site. The primary selector switch with by-pass isolation switches will have the capacity to serve not less than the sum of the three transformer's kva rating, and have load limiting equal to the full hospital demand plus the 20 percent spare load growth. The automatic function will monitor both primary feeders, and if power is lost to the feeder serving the load, the load will be transferred to the other feeder in not more than 30 cycles if power exists on that primary feeder. Service feeders will be connected to different power sources, if available, and to two differently routed distribution system feeders. Where two power sources are not available, the service feeders may be connected to two different sections of a loop system.. Transformers will normally be located outside the hospital, but may be located within the building where practicable and economical. Multi-ended network substation distribution systems will be designed for hospitals, medical centers and specially designated facilities. Each transformer in the multi-ended network transformer substation will be sized to carry 50 percent of the full hospital demand and spare load (linear and nonlinear) growth capacity. All transformers will be identical and impedance matched. All multi-ended network transformer substation will have coordinated surge and fault protection. The system protection will be selective.

3. AUTOMATIC PRIMARY FEEDER SELECTOR SWITCHES (APFSS). *(This is not to be construed as an automatic transfer switch)* The APFSS may be double-throw with draw-out construction. The APFSS rating will be not less that the sum of the three transformer kva ratings, and have adjustable load or fixed limiting control (the loading control will limit the capacity to that of two transformers). Contacts may have viewing ports for ease of contact inspection. The APFSS will have indicator lights to identify which normal primary feeder is connected to the load (green in color). Load transfer to either normal primary feeder will be achieved with not more than 30 cycles of load interruption. All APFSS will be equipped with load break by-pass isolation switch to maintain normal primary service feeder connection or when the APFSS is being repaired or maintained. The by-pass isolation switch can be initiated with not more than two movements of the hand to either position regardless of the position or condition of the APFSS. Two vacuum power circuit breakers with load break by-pass isolation switch may be used.

4. TRANSFORMERS.

(a) Each service entrance transformer of the multi-ended substation with fans is sized to carry 40 percent of the design load as to utilize standard off-the-shelf units and increase transformer efficiency. Each of the three transformers are equipped with forced air-cooling fans to increase the continuous capacity rating of each transformer by 34% to 50 + percentage of the design load when activated. The fans are automatically activated when the

load on any transformer exceeds the no fan rating. The temperature indicator and the current relay will activate the cooling fans. If the fans are not activated when the temperature indicator and/or the current relay exceed the manufacturer's setting, and alarms will be sounded so load shedding can be initiated. Each transformer must carry a 10 percent overload for short periods of time without fans.

(b) If a service entrance transformer fails, off line for maintenance, or the normal bus receives no power from any one of the service entrance transformer feeders, the fans on the remaining two service entrance transformers will be automatically activated allowing 100 percent of the total hospital load to be assumed. There is no time delay in the load shifting to the remaining two transformers.

(c) Where each transformer of the multi-ended network substation is sized for no fan application, each transformer will be sized to carry not less than 50 percent of the full hospital demand and spare load (linear and nonlinear) growth capacity. Each transformer feeder serving the normal bus will be equipped with an alarm to indicate power loss from that feeder to the normal bus.

(d) The transformers in the multi-ended network substation will be identical and impedance matched.

5. 52 DEVICES. The 52 devices (AC power circuit breaker devices, draw-out type) will be sized to support the transformer capacity.

(a) The equipment will be laid-out in a manner which allows load center expansion, without requiring replacement. New sections can be added to either end of the load center.

(b) The main load center bus will be sized for not less than the sum of the three transformer kva rating.

6. GROUND FAULT. Ground fault protection for medical facilities will conform to those requirements in NFPA-70 and 99, and MIL HDBK-1191.

7. STANDARDS. All metering will read true RMS, and the protective relays and devices will comply with IEEE standards.

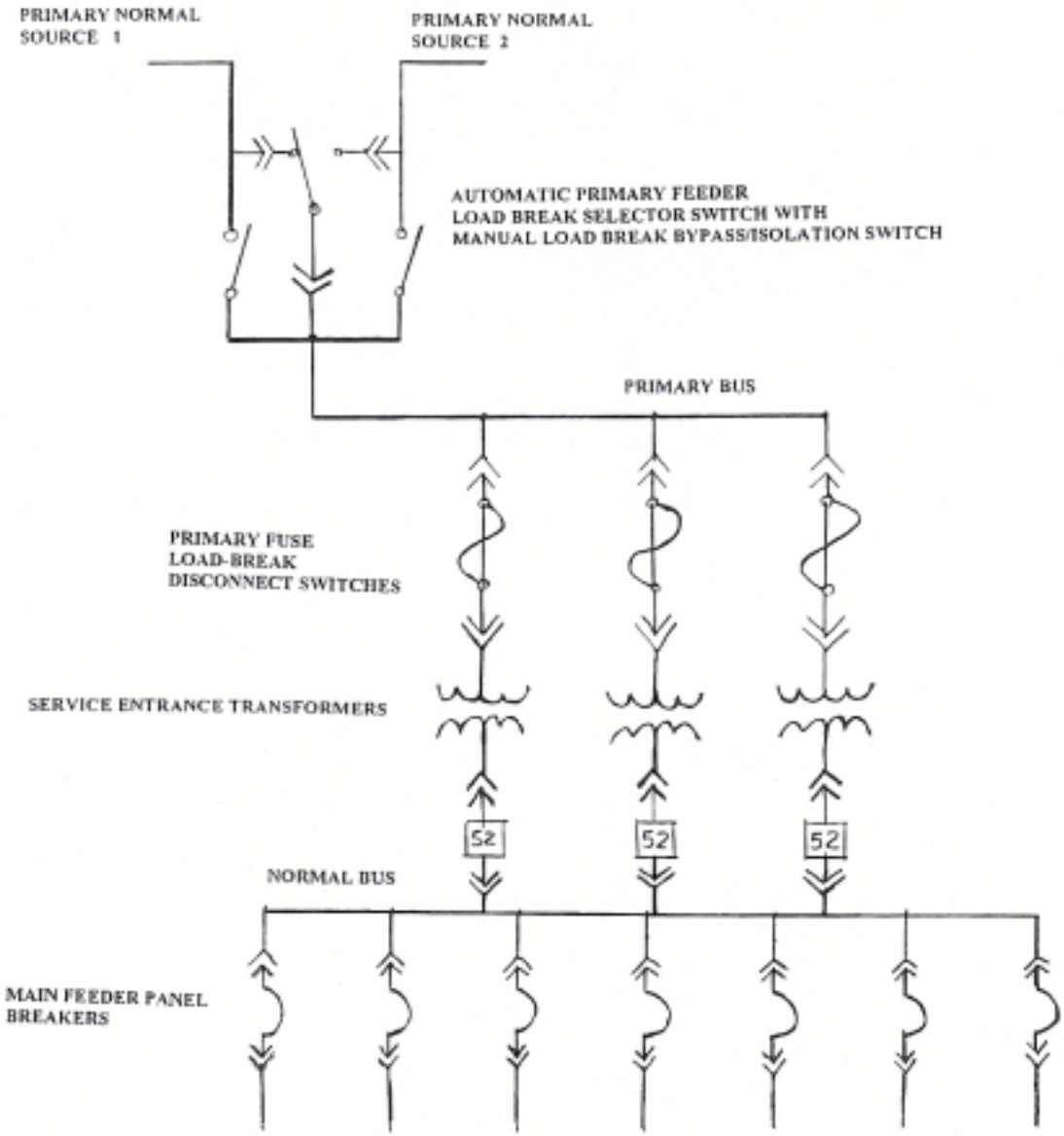

THE MAIN FEEDER PANEL BUS CAPACITY WILL BE NOT LESS THAN THE SUM OF THE TRANSFORMERS CAPACITY.

FIGURE 10-5 MULTI-ENDED NETWORK SUBSTATION SYSTEM DIAGRAM

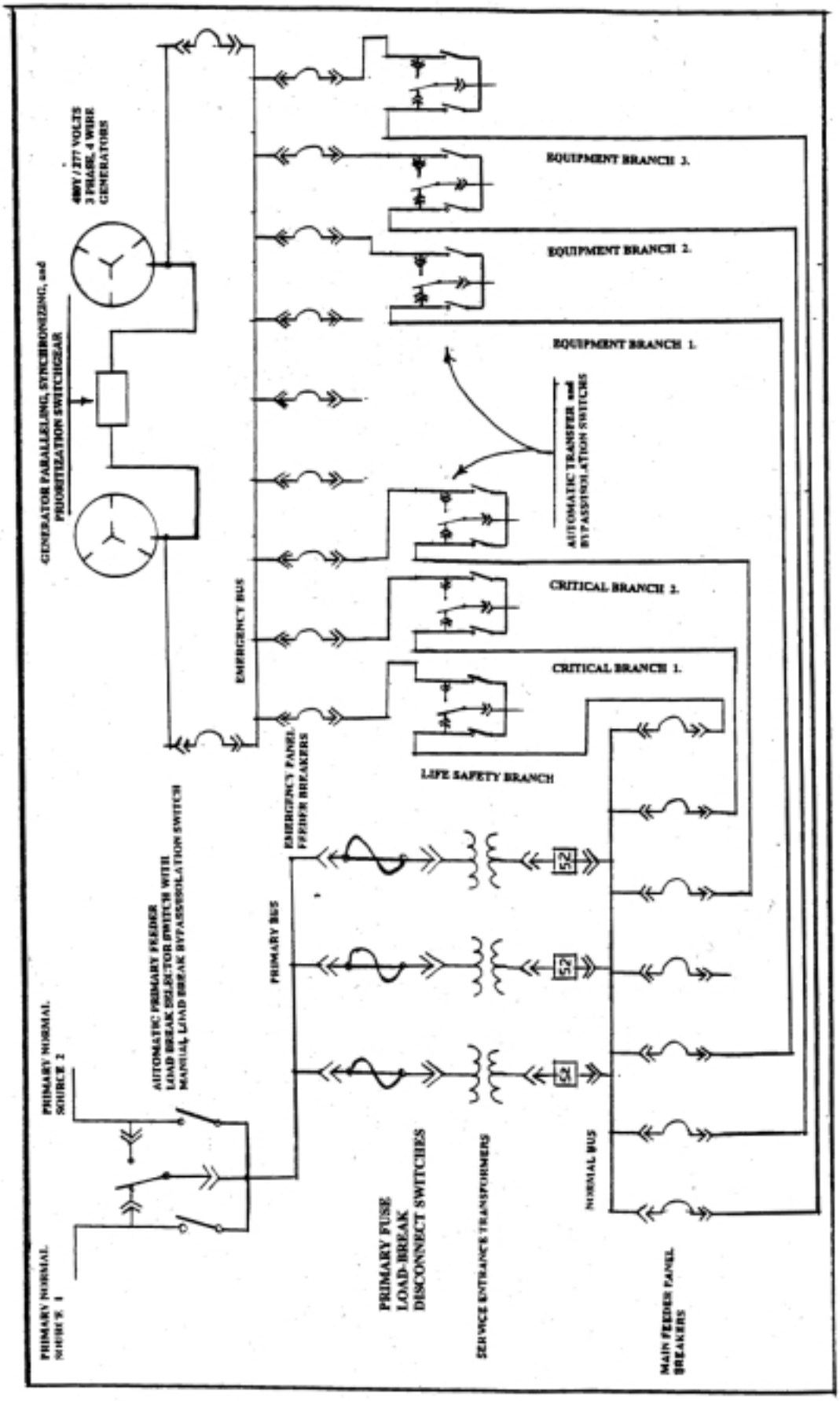

FIGURE 10-6 MULTI-ENDED NETWORK SUBSTATION And EMERGENCY POWER SYSTEM DIAGRAM

SECTION 11: COMMUNICATIONS

11.1. INTRODUCTION. The planning and engineering of communications systems for health facilities will conform to the design criteria contained in this section. Department of Defense Medical Facilities use various integrated voice data, imaging, information, electronic security and telemedicine systems to provide quality healthcare to DOD personnel. All references are included at the end of this section.

11.1.1 Construction. All construction will require application of detailed communications engineering concepts, with consideration of system size, organization, function and cost.

11.1.2 Applicability. All communications systems described herein, will be designed, procured, and installed under the Military Construction Defense Medical (MCDM), Operations and Maintenance and other programs.

11.1.3 Seismic Design. Seismic design requirements will be in accordance with Section 06.

11.1.4 Design Criteria. Communication systems, equipment and facilities will be designed in conformance with Uniform Federal Accessibility Standards; Americans With Disabilities Act (ADA), NFPA 70, NFPA 99, NFPA 101, EIA/TIA 568, EIA/TIA 569, EIA/TIA 606, EIA/TIA 607,EIA/TIA 758 and applicable using Service standards and criteria. See references at the end of this section

11.2 COMMUNICATIONS SYSTEMS ACQUISITION. Communications systems and equipment authorized for procurement and installation are identified in section 1 of this document.

11.3 PLANNING, DESIGN, AND CONSTRUCTION RESPONSIBILITIES. Communications systems for medical facilities will incorporate the latest proven technology and equipment. Integration and coordination of various communications systems are especially demanding since several government agencies and the designing firm are involved. The government agencies include the Design and Construction Agent, medical facility planning agent (Army: HFPA; Air Force: HFO; Navy: BUMED) and information systems support agent for the using Service. The responsibilities of each agency and the designer include:

11.3.1 Health Facility Planning Agent. The health facility planning agent establishes functional requirements. A critical function of the planning process is to ensure that the section 17 of the DD form 1391 is completely and accurately developed. This information is captured and included in the front page of the DD form 1391.

11.3.2 Proponent Funded Design. The planning agent shall insure that the using Service has completed planning and budgeting for all proponent funded equipment required to provide a complete and useable facility by the completion of concept design.

11.3.3 Design Agent. The Design Agent shall insure that a complete and accurate cost estimate for all communication systems is developed by the completion of concept design.

11.4 COMMUNICATION DISTRIBUTION FACILITIES. Communications systems distribution and support facilities will be provided as described herein:

11.4.1 Exterior. Design of the exterior cable system will be interfaced with the existing installation cable network and based on the requirements of the project. All exterior cable will be installed underground to the extent it is financially and physically feasible and not in conflict with the installation architecture. The primary route from the new facility to the Installation network will be a concrete encased duct bank to the nearest available service point.

11.4.1.1 Funding. Funding for the facility will include the cost of the cabling, duct bank, new manholes to connect to the nearest available operational service point in the installation infrastructure system. Outside plant cables should be used to provide communications service from the Installation Dial Central Office, (DCO). Project funds for new outside plant cables will be used when no existing outside plant cable is available. The additional cost of outside plant cabling required for communications systems to connect to the nearest available service point on each system will be included with the new facility.

11.4.1.2 Design Considerations. The number and size of conduits installed will provide for current needs and for reasonable future expansion. Design will be based on the forecasts for the telephone system line and trunk load and all other cable systems using the duct bank. The design analysis shall include the basis for conduit quantities used. Design of duct bank and manholes shall be based on ANSI/TIA/EIA 758.

11.4.2 Interior.

11.4.2.1 Cable Tray. Provide cable trays above the suspended ceilings in the corridors for all communications systems cables. Cable trays shall be located just above the ceiling and shall be designed and installed to insure ease of accessibility for future wiring changes. Cable trays in medical facilities with Integrated Building Systems (IBS) will be located in the distribution zone (see section 19). A minimum one inch conduit pathway will be provided from each communication system outlet to the cable tray.

11.4.2.2 Communications Rooms and Closets. The communications rooms/closets will be sized and provided utility support in accordance with EIA/TIA 569. Communications rooms/closets shall be a minimum of 100 square feet each. Equipment installed in these rooms/closets will be shown on plan and elevation drawings. In multistory facilities, communications rooms/closets will be provided on each floor and vertically aligned to facilitate connection of all communication system riser conduits and wiring. Utility outlets will be on a dedicated circuit of the equipment branch of the emergency power system. Each equipment location will be provided with appropriate dedicated AC power. See section 10 for power system information. Insure that AC power from the appropriate emergency power branch is provided for each communication system. A penthouse equipment room, when required in hospitals and medical centers, shall be provided. This room is usually on the top of the building or in a large mechanical space on the top floor of the building. The room is used to house radio equipment for the radio paging system, the television system and the ambulance emergency medical system (EMS). Also provide conduit penetrations to antennas for coaxial cables and emergency power for equipment in accordance with Table 11-1.

11.4.2.3 Communications Head End Equipment Room. A separate communications equipment room with sufficient space for personnel circulation and equipment maintenance will be provided in hospitals and medical centers for head end equipment such as television, public address and program distribution, radio, and data communications equipment. This room will be located adjacent to, the telephone system equipment room. This function will be supported by a communications room/closet in clinics. All installed equipment will be shown on the drawings. Circuit breaker panels fed from the appropriate emergency system branches, as shown in table 11-1, shall be installed in the room to serve the head end equipment. Design of the room including utility support shall be in accordance with EIA/TIA 569.

11.4.2.4 Central Communication Room. A central communication room will be provided in hospitals and medical centers. The central communication room will be located as directed by the Using Service. The central communication room size will be based on the quantity of wall mounted graphic displays, annunciator displays and other monitor and control equipment. Install monitors, annunciators, and control equipment in the room for the any or all of the following systems per using service direction:

- Engineered smoke control system (ESCS).
- Fire detection and alarm system.
- Generator monitor and alarm system.
- Medical gas monitors and alarms.
- Closed circuit TV (CCTV) for security (space designated for monitor and programmable system and control equipment and videocassette recorders).
- Refrigeration temperature monitor and alarm system (blood bank, food, pharmaceuticals (pharmacy and logistics) and morgue).
- Public address master microphone and paging zone selector panel.
- Radio paging console.
- Telephone attendant console.
- Security system console.
- Electronic Private Branch Exchange (EPABX) alarms.
- Pneumatic tube system control equipment

11.4.2.5 Main Computer Room. A separate main Information Systems computer room shall be provided when required by the using Service. The room shall be sized to accommodate the equipment planned for installation in the space. The designers will accommodate power distribution, HVAC with temperature and humidity controls, access control, fire detection and alarm, uninteruptable power supplies, voice and data equipment in addition to the basic computer equipment. The room will be equipped with sound dampening finishes. A raised floor will be provided if required by the using service.

11-5. TELEPHONE SYSTEM REQUIREMENTS.

11.5.1. Central Telephone Equipment. The facility shall receive telephone service either from an internal Telephone Switching System (TSS) or served from the installation DCO as prescribed by the facility requirements and site specific information. An internal TSS is required in all hospitals, medical centers and other medical facilities as required by the using service. The TSS may consist of a Private Branch Exchange (PBX) or Remote Switching Center (RSC) as directed by the using service. The TSS will be capable of be upgraded to provide a national non proprietary ISDN service. If ISDN service is required by the using service it shall be a national nonproprietary ISDN service.

11.5.1.1 Facilities. The following will be provided when a TSS is installed: service entrance conduits, a main distribution frame (MDF), a 5 ohm (maximum) signal grounding system in accordance with MIL-HNBK-419 and NFPA 70, power from the emergency life safety branch and a DC power supply consisting of dual rectifiers and sealed, low maintenance batteries. Batteries shall have a minimum capacity of two hours at full load. Each rectifier shall be sized to simultaneously operate the fully loaded TSS and charge the batteries. Multiple element surge protectors shall be installed on the AC input to the telephone system. These devices shall provide clamping to limit any transients and surges on the line to prevent damage to the rectifiers and the telephone system. In locations where the Installation AC system is known to have problems with high transients and voltage variations on the network, power conditioners shall be installed on the AC input to the telephone system. A pre action sprinkler system will be provided in the telephone system equipment room, see section 13 for sprinkler system criteria. When the sprinkler system is activated the AC and DC power to the telephone system will be automatically disconnected. The room shall be designed in accordance with EIA/TIA 569 and be large enough to accommodate the telephone system and all support equipment and have adequate equipment access, clearance and work space. The electrical and air conditioning services for the telephone system equipment room shall be sized to accommodate the worst case commercial system based on the telephone system maximum operational capacity. The complete air conditioning system for this room will be powered from the equipment branch of the emergency power system.

11.5.1.2 Telephone system line/port count. Line and port as used in this Military Handbook have the same meaning. Since a TSS has a digital computer as a central control unit the point of connection for each external device (telephone instrument or trunk circuit) is called a port. Each single line telephone is connected to its own dedicated port which has a unique telephone number. There will be no multiple connections of single line instruments to a port. Each electronic feature phone is also connected to its own dedicated port, however, due to the type of line circuit cards required for these units, multiple telephone numbers can be assigned to each port. When making a line count based on the Telephone Station Requirement Schedule (TSRS) data, each single line phone will be counted as one line. This is reflected in the number in the, "No. of Lines and Service Class," column for each room. Each multi-line electronic feature phone shall also be counted as one line regardless of the number of line entered in the, "No. of Lines and Service Class," column in the TSRM.

11.5.1.3 TSS Subscriber Line/Port Capacity. The TSS subscriber port capacity shall satisfy three different growth categories. The initially installed capacity (IIC) shall equal the TSRS port count plus 15 percent (minimum). The IIC refers to a fully equipped telephone system requiring only the connection of telephone instruments to activate the port capacity specified. The fully wired capacity (FWC) provides for expansion of the port count beyond the IIC port size by requiring only the insertion of additional subscriber line cards and connecting telephone instruments. The FWC shall equal the TSRS port count plus 40 percent (minimum). The third category is the maximum operational capacity (MOC) of the telephone system. The MOC shall equal the IIC port count plus 100 percent (minimum). The MOC provides for long term expansion of the facility by the addition of cabinets, power supplies, processors, and other equipment to expand the telephone system within its design limits. The IIC, FWC, and MOC port counts shall be included in the telephone system specifications.

11.5.1.4 TSS Trunk Capacity. As a minimum, the number of trunk ports allotted for each category shall be 15 percent of the IIC, FWC, and MOC. The number of trunk circuits initially installed inside the telephone system on trunk circuit line cards shall be 15 percent (minimum) of the IIC.

11.5.1.5 Call Detail Recording (CDR). The TSS shall include software and hardware to provide a CDR function. The CDR shall enable the staff to establish accounting data for each station and trunk to include billing and traffic data. The CDR shall collect data on all calls made in the system, including all incoming and outgoing trunk calls. The CDR system shall provide software flexibility to enable the user to tailor the format of the reports produced on the CDR printer. As a minimum, the CDR system shall identify the station placing the call, telephone number dialed, date and time of day, call connect time, call duration, trunk type, cost, and either a cost center identification code or other code keyed to an organization or activity. The CDR will also enable the user to perform TSS traffic studies to show maximum busy hour calls and dial tone delay data.

11.5.1.6 System Features. The telephone system shall include an automatic diagnostic system with local and remote alarms, remote diagnostics hardware and software, local printouts of system reports and maintenance and alarm data and a power fail-auto-restart feature as well as any other features and functions required by the Using Service.

11.5.1.7 Automatic Call Distribution (ACD) / Auto Attendant (AA). An ACD and/or AA, if required by the using Service, will be provided. Sufficient telephone lines to the ACD and/or AA as well as dedicated commercial circuits which bypass the DCO will be provided, when required, for the efficient operation of the system. All incoming lines will be answered on a first-in first-answer basis. When all ACD operators are busy, incoming calls will be placed on hold after receiving a prerecorded message and will be served by the first available operator. When offices are closed (nights, weekends, holidays), all calls will be transferred to a recording device for accepting appointments and cancellations. The ACD shall provide a workload recording system. The workload recording system shall come equipped with a printer. The system shall record data and generate reports indicating the number of calls placed and received by each attendant, the number of uncompleted incoming calls due to a busy signal or hang-up, call answer time, call duration, calls waiting, calls completed by each attendant and the number of times all positions are busy and the duration of each busy period. Design shall include expansion capability to add additional operator stations and incoming lines.

11.5.2 Direct Telephone Service From the DCO. When telephone service is connected directly from the DCO to the medical facility telephone sets service entrance conduits, an MDF and power from the equipment branch of the emergency power system, if available, shall be provided in the service entrance facility. A TSRM shall be developed for the medical facility based on the features available from the DCO.

11.5.3 User Station (telephone) Features. The following features are the minimum to be furnished with the Telephone system software package and the telephone instruments:

Call Transfer/Consultation Hold/Three Party Conference.
Camp-on.

Progressive Conference.
Abbreviated Dial/Speed Call.
Executive Bridging*
Do Not Disturb.
Call Forwarding.
Call Forwarding-Busy.
Call Forwarding-Don't Answer.
Call Waiting.
Call Intercept.
Alternate Routing.
Direct Inward Dialing.
Direct Outward Dialing.
Abbreviated Dial Ring Down Groups.
Call Pick Up.
Voice Mail.
Prerecorded Messages.
Caller ID
Caller ID Block
Call Trace

* This feature will be restricted to the command section and those areas listed in table 11-2.

11.5.4 Integrated Intercommunication (Intercom) System. Except for the dedicated intercom systems listed in other parts of this chapter, all intercom functions will be engineered into the telephone system. These intercom systems will be completely provided by the telephone system hardware and software with no external equipment. All intercom system calls will be private line (two subscribers) except when callers use three party conference or executive bridging. Each intradepartmental intercom system will be accessed via a separate function button on the subscriber electronic feature telephone. An abbreviated dial code shall be dialed to access stations.

11.5.4.1 Intradepartmental Intercom Systems. Subscribers within a dedicated group will be provided an efficient means of two-way voice communication. Intradepartmental intercom will be provided among department heads, secretaries, NCOICs and other staff members who converse on a frequent basis. The intradepartmental intercom groups will be identified on the TSRM by assigning an appropriate alpha numeric code to each station on the group.

11.5.4.2 Interdepartmental Intercom Systems. There will be no interdepartmental intercom networks on the telephone system. However, in order to assure that critical medical care areas can reach any office in the facility during an emergency, the executive bridging feature shall be assigned to all telephones in those areas. A list of critical care areas is shown in Table 11-2. That table will be used during TSRM development to assure all critical medical care areas are assigned this service.

11.5.5 Service Class. CONUS stations will be assigned service class dial access authorization as described in the following class categories:

AA: Medical facility, on-installation, local commercial, DSN, and long distance commercial.
A: Medical facility, on-installation, local commercial, and DSN.
C: Medical facility, on-installation.
H: Medical facility.
P: Commercial pay telephone. Outside CONUS (OCONUS) stations will

be assigned service class as above except class A will be medical facility, on-installation, local commercial, and intratheater (Europe and Korea).

11.5.6 Telephone Instrument Types. Instrument types to be provided in each functional area are as indicated in table 11-4. The various types of instruments in a medical treatment facility are as follows:

E* - Electronic feature phone set
D - Single line desk/set
ES* - Electronic feature phone set w/speaker/microphone
DS** - Single line desk set w/speaker/microphone
W - Single line wall set
WS** - Single line wall set w/speaker/microphone
P - Pay phone, local telephone company will provide and install set

* Electronic feature phones have a multi-line (multiple telephone numbers and features) capability. These phones are typically analog instruments, but may be a digital instrument.
** Non electronic speaker phones may require a power outlet for proper operation.

11.5.6.1 Speakerphone Locations. Table 11-4 provides guidance for the location of speakerphones.

11.5.6.2 Patient Bedside Telephones. Telephones with dial pad in the handset or handset integrated into bedrail will be provided in patient bedrooms.

11.5.6.3 Wall Telephone Locations. Table 11-4 provides guidance for the location of wall telephones.

11.5.6.4 Public Pay Telephone. Pay telephone will be positioned to accommodate handicapped individuals and patients in wheelchairs in accordance with Uniform Federal Accessibility Standards and/or Americans with Disabilities Act. Mil-Hnbk 1012/3 provides information for locations and mounting heights. Table 11-4 provides guidance for locations for pay telephones. Pay station outlets will be placed in locations that are quiet and conveniently located near high traffic areas. Outlets will provide 0.25 meters of coiled telephone cable behind a blank cover plate and adjacent 120v ac outlet.

11.5.6.5 Single Line Analog Telephones. Single line analog telephone sets shall be used to provide basic telephone service in most locations.

11.5.7. Elevator Premises Distribution System Outlet. Telephone connection shall be provided in elevator machinery rooms for each elevator car for the connection of elevator telephone sets. Telephone instrument should be furnished by the elevator supplier and be a direct ring down/hot line to a 24 hour staffed location. See section 17 for coordination with Elevator systems.

11.5.7.1 Standard Room Outlets. Doctor's offices, exam room and other standard nominal 9.3 net square meters (NSM)(100 net square feet, NSF) offices in outpatient clinics will be provided with 2 desk Premises Distribution System (PDS) outlets, however, only one telephone instrument will be provided in each room.

11.5.7.2 Conference Room Outlets Conference rooms may contain outlets to support video teleconferencing and emergency operations as required by the using service.

11.5.8 Telephone Station Requirement Matrix (TSRM). The TSRS lists the features, class of service (COS), instrument type, and other special requirements for subscriber stations in health facilities. Table 11-4 is included to assist the designer in determining the telephone station requirements and to develop the TSRM document.

11.5.8.1 Single Line Concept. Military health facilities will be designed on the single line concept.

11.5.8.2 Station Hunt Groups. For stations provided this feature, incoming calls are automatically routed to an idle line when the called line is busy. Station hunt groups will be assigned in large or multiple occupant office areas. Assignments of hunt groups will be coordinated with the Using Service and be identified on the TSRM.

11.5.8.3 Methodology For TSRM Development. A draft TSRM will be developed using the Program For Design (PFD), Design Instructions, floor plans and the example TSRM shown in Table 11-5. The TSRM shall be first drafted at the concept design stage and be refined and updated with each subsequent submittal of the design. The draft TSRM shall include each room and its function, the intradepartmental intercom system assignments, number and types of instruments, number of lines and service class, feature package, and a column for notes. The TSRM shall also include a recap of number and type of outlets (wall, desk, floor), number and type of instruments and a listing of the telephone system IIC, FWC and MOC totals for subscriber and trunk line categories. This document is intended for use as guidance in the programming of the telephone switching system by telephone switching system contractor/provider.

11.6 Premises Distribution System (PDS). A PDS will be provided throughout the facility and will be designed and installed in accordance with the most current version of Mil-HNBK–1012/3 EIA/TIA 568, EIA/TIA 569, EIA/TIA 606, EIA/TIA 607 and tested in accordance in accordance with the basic link test of EIA/TIA 568 using level II accuracy. The PDS shall be a universal wiring network to serve all of the voice and data needs of the facility. The PDS will include both horizontal and backbone unshielded twisted pair (UTP) copper cables and fiber optic horizontal backbone cables. The PDS will support voice, facsimile, trunk, pay telephone, data and other special services within the facility. The PDS cables shall be installed in conduit and cable tray. All cables shall be terminated on both ends on terminal blocks, patch panels or outlet assemblies. For OCONUS installations shielded twisted may be required by the using military service.

11.6.1 UTP Backbone Cable. A dedicated multi pair UTP copper cable to support voice applications shall be run from the building distribution frame (BDF) to each communications room/closet. The cable shall be rated category 3 or higher per EIA/TIA 568. The backbone cables shall be sized to accommodate the initial installed capacity plus fifty percent spare capacity. In facilities with an installed TSS the associated main distribution frame (MDF) shall replace the BDF cited above.

11.6.2 Fiber Optic Backbone Cable. Fiber optic cables shall connect all of the communications rooms/closets with the fiber building distribution frame

(FBDF). The FBDF shall be located as directed by the using service. The type and quantity of fiber cables shall be coordinated with the using service. Patch panels shall be used to terminate all backbone fiber optic cables.

11.6.3 Horizontal Copper Cable. The horizontal cable shall consist of 4 pair UTP cable rated category 5 or higher. The cable shall be installed between the communications rooms/closets and the user outlets. The horizontal UTP cable shall support the voice and data needs of the user. The use of horizontal UTP rated higher than category 5 shall be permitted when standards become available for cable performance and testing.

11.6.4 Horizontal Fiber Optic Cable. Horizontal fiber optic cable shall be installed on an as needed basis to support data requirements of the using service not easily supported on the horizontal UTP cables. A current example of this would be to support digital radiology equipment. Horizontal fiber optic cables will be installed to support known current needs of the using service and not to support future migrations to fiber.

11.6.5 PDS Outlets. PDS outlets shall be located to support user work stations throughout the facility. A standard outlet shall consist of 12 centimeter square backbox with a dual 1.6 centimeter plaster ring. The cover plate shall include a minimum of 6 available positions for jacks. All UTP jacks shall be 8 pin modular rated at category 5 or higher per EIA/TIA 568. Standard jacks shall as a minimum contain one jack for voice service and one marked for data service. The using service shall provide input on the outlet density and number of jacks required at each work station and each faceplate.

11.6.5.1 Wall Telephone Outlets. Wall telephone outlets will be located so that the highest operable device of the telephone is 1.2 meters (48 inches) above finished floor (AFF). Where restricted by casework, outlets will be adjusted and appropriately noted on the floor plan and elevation. Desk outlet boxes will be located 0.45 meters (18 inches) AFF.

11.6.5.2 Modular Furniture Outlets. Modular Furniture Outlets may be accommodated by the use of consolidation points or standard wall outlets as allowed by EIA/TIA 568. The ITP may be located either above the ceiling, in the IBS located below the floor or on the wall with connecting conduit to the modular furniture connection point. The use of “power poles” is permitted if approved by the using service.

11.7 DEDICATED INTERCOM SYSTEM. Dedicated intercom systems shall be provided in play therapy mirror rooms and group therapy mirror rooms if required by the using service. In these areas, speaker-microphones will be installed in the therapy rooms for two way sound communication with the adjoining mirror room.

11.8 CENTRAL DICTATION SYSTEM. Designs for medical facilities will include conduit, cable and outlets for Government furnished, Government installed (GFGI) central dictation systems. One or more will be provided, depending on the size of the facility. Access to the central dictation system will be provided via the telephone system. A 25 pair (minimum) telephone cable will be provided to the central dictation room. Cable will be terminated in a flush mounted terminal cabinet with distribution to wall outlets at recorder locations. Terminal cabinet and outlets will be shown on equipment elevation and plan drawings.

11.9 ENTERTAINMENT AND EDUCATIONAL TELEVISION (TV) SYSTEM. A complete

TV system consisting of a headend component and a distribution component shall be provided.

11.9.1 Television signal Source. Source of the TV signal shall be from a Cable Antenna TV (CATV) provider, an Master Antenna TV (MATV) or an Satellite Master Antenna TV (SMATV) system. While CATV is the preferred source, the recurring cost of this option, based on the installation contract with the supplier, may make it prohibitive. The choice shall be based on an economic analysis of the three options. The economic analysis shall be completed by the end of concept design.

11.9.1.1 Headend. For hospitals and medical centers, the headend shall be installed in the penthouse equipment room when an MATV or SMATV system is used. When a CATV source is used for these facilities, the headend shall be installed in the communications head end equipment room. For stand alone clinics, the headend shall be installed in one of the communications rooms/closets.

11.9.1.2 Headend Equipment. All equipment required to acquire, process, filter and condition the TV signals for distribution, shall be provided. This shall include antennas, converters, amplifiers, filters, combiners, test ports, attenuators, and any other equipment required by the TV signal source selected. Provisions for an interface, if required by the using service, to the hospital patient information system shall be provided.

11.9.1.3 Distribution System. The distribution system shall consist of coaxial cable, amplifiers, splitters, directional couplers, multi-taps, and outlets to provide radio frequency TV signals to the GFGI television sets throughout the facility. The amplifiers shall be installed in communications closets throughout the facility. Multi-taps are typically installed along the outside edge of the cable tray to facilitate distribution to the outlets.

11.9.2 Television outlet location. Television outlets will be provided in the following manner in the following types of rooms.

11.9.2.1 Nonpatient Rooms. A television outlet will be provided in each day room, patient lounge, waiting room, classroom, conference room, auditorium, staff lounge, staff sleep room, group therapy, play therapy, administrative office in the command suite and in each department chiefs office. In rooms larger than 14 net square meters (NSM) the outlet(s) will be located 0.3 meters below the ceiling. For smaller rooms, the outlet will be located 0.45 meters AFF allowing ready access for manual control. In conference rooms, lounges and classrooms, larger than 14 NSM, the television outlet may be connected through a coaxial switch. The coaxial switch will be required if a VCR will not be permantely installed with the TV and will be mounted 1.2 meters AFF and will include an input jack for a video cassette recorder. Switch will be two position type marked for central TV and VCR selections. The TV outlets will be mounted per using service requirements and a remote control unit will be provided.

11.9.2.2 Patient Rooms. Television outlets will be located on the wall opposite the bed and out of the circulation path. Remote channel selection from the nurse call pillow speaker or patient bedrail system will be provided. Personal Patient Television systems, if desired by the using service, may be provided in multipatient rooms.

11.9.2.3 Psychiatric Patient Rooms. Television outlets will not be

provided in psychiatric seclusion rooms. The using service shall determine the requirement for television outlets in all other psychiatric patient rooms.

11.9.3 Television Outlet Configurations. Television outlets will be configured as follows:

11.9.3.1 Standard Wall TV Outlets. Outlets will consist of a 100 millimeter square box with a metal barrier and a 2-gang flush metal device plate. The device plate will have a built in 75 ohm female type F coaxial connector on one side, and a NEMA 5-20R AC power receptacle on the other side.

11.9.3.2 Patient Room TV Outlets. Outlets for non personal patient television systems will consist of a 100 by 150-mm 3-gang box with a metal barrier and a 3-gang flush metal device plate. The device plate will have a built-in 75 ohm female type F coaxial cable connector on one side, a bushed opening in the middle section to receive the television control cable, and a NEMA 5-20R, AC power receptacle on the other side. The audio output of the television receiver and the TV control cable will be connected to the associated nurse call bedside station by a shielded cable in a 20 mm conduit. Outlets to support Personal Patient television systems shall be coordinated with the system provider.

11.10. ROOM STATUS SYSTEM. Room status system provides light signaling system of room status in exam, treatment, and procedure rooms in clinics. The inclusion of a room status in the design will be determined by the using Service staff based on the requirements of the facility.

11.10.1 Station Locations. Provide stations in each exam room, doctors office, treatment and procedure room and each 100 NSF administrative office, such as NCOIC, which may be converted to an exam room.

11.10.2 Electrical Power. Room status systems will be on normal power.

11.10.3 System components and operation. The Room Status System will consist of the following components and operate in the described manner.

11.10.3.1 Room Status Station. Room status station containing three color coded push buttons will be provided inside the doorway to each room. The three status conditions typically indicated include: Room clean and ready for a patient, chaperone required, cleanup required. Pressing an appropriately marked color coded push button on the station will signal the designated status condition. Pressing the push button a second time will cancel the status signal and all associated light indicators. The system shall not be capable of simultaneous indication of more than one status at a time.

11.10.3.2 Room Dome Light. Room dome light without chime will be located outside each room with a room status station. An activated push button on the room status station will illuminate the corresponding section of the dome light designating a unique status condition. Dome and indicator lights will be coordinated between room status and nurse call to assure unique and consistent color indications for each type of signal.

11.10.3.3 Zone Dome Light. Zone dome light will be provided at the intersection of office/exam "finger" corridors and staff support corridors. The zone dome light will illuminate with color identical to the room dome light.

11.10.3.4 Annunciator Panel. A wall mounted annunciator panel will be located at the main reception area and at each control desk/subreception area.

11.10.3.5 Central Equipment. Central equipment panel will be located in a communications closet nearest the area served. The mounting of any equipment above the ceiling is not allowed.

11.10.3.6 Swing Capability. Each clinic room status system will operate independently unless swing capability is required by the Using Service. This provides the capability of transferring designated rooms from one clinic's annunciator panel to another clinic's annunciator panel thereby allowing flexibility within the modular clinic design concept.

11.11 TONE VISUAL NURSE CALL (TVNC). Tone/visual nurse call systems provide simultaneous light and tone signaling of patient and staff calls for emergency assistance. TVNC systems are typically installed in clinics.

11.11.1 Station Location. Provide emergency call stations in each patient toilet room, public toilet inside the clinic, patient shower, recovery room, hydrotherapy/whirlpool tub area, clinic treatment room, specimen drawing, blood donor area, selected PT treatment cubicles, clinic procedure room, pulmonary function lab, immunization room, dialysis rooms, Treadmill Room, Allergy Injection Room, EEG Testing Room, radioisotope lab, patient dressing areas (EG/Radiology/PT etc.) and other treatment areas in which a patient might be left alone.

11.11.2 Electrical Power. Tone visual systems will be on the critical branch.

11.11.3 System Components And Operations. The system will be composed of the following components and operate in the manner described.

11.11.3.1 Emergency Call Station. An emergency call cord station will be provided adjacent to the patients head in recovery areas and treatment rooms, beside each toilet, adjacent to each whirlpool, beside the chair in each specimen bleeding/donor area and above the shower head. Waterproof stations will be provided in showers and at whirlpool. An emergency nurse call is initiated by pulling a cord or pushing a button at an emergency nurse call push button station. This will cause the following events to occur until the call is cancelled at the originating station.

11.11.3.2 Room dome Light. Dome light with chime outside room or cubicle will illuminate and a chime will sound. The dome light color will be coordinated with all other systems to provide a unique annunciation.

11.11.3.3 Zone Dome Light. Zone dome light at intersection of corridor where the patient care room is located will illuminate with a light also. The color of the light shall be coordinated with the using service to provide a unique annunciation.

11.11.3.4 Annunciator Panel. The wall mounted annunciator panel display at the nearest nursing station or reception desk will illuminate and indicate the call origination point and sound an intermittent signal. The light and signal can only be canceled at the call originating station. Swing capability shall be provided between clinics when required by the using service.

11.11.3.5 Central Equipment. Central equipment panel will be located in a communications closet nearest the area served.

11.12 AUDIOVISUAL NURSE CALL (AVNC) SYSTEM NETWORKS. Communication of patient and staff calls for assistance will be provided from patient care locations through combinations of tone and light signals, full duplex intercom, digital display, and radio page.

11.12.1 AVNC System locations. AVNC systems are typically provided in inpatient wards and emergency rooms. Networks allow each patient care unit to operate from a local master station or transfer all nurse call functions to any other master station on the network. Prime network capabilities include the following:

11.12.1.1 AVNC System Features. Audiovisual nurse call (AVNC) system networks will have the same basic feature package for standardization and to simplify maintenance problems. Features that are not required on a particular patient care unit will not be activated on the system installed in the unit.

11.12.1.2 Call Annunciation. Light, tone, digital display and digital radio page annunciation of patient and staff calls for assistance will be identified by classification, priority and origination point. Annunciation is routed to locations to assure an appropriate and timely staff response over the most direct route to the call origination point.

11.12.1.3 Hands Free Operation. Hands-free voice intercom from patient care areas and staff work stations to the master station serving the unit shall be provided once a call is established.

11.12.1.4 Device Alarms. The AVNC system shall have the capability to transmit the signaling of alarms from an attached medical device such as an IV pump.

11.12.1.5 Television Control. The nurse call patient station shall provide for remote control and sound audio reception from patient TV set that is mounted on the patient room footwall or ceiling.

11.12.1.6 Lighting Control. The patient station pillow speaker or bed rail system shall provide control of the over bed reading and general lights.

11.12.1.7 Call Statistics. If required by the Using Service, selected printout of operating statistics including call type, volume and response time data shall be provided.

11.12.1.8 Access Control Interface. If required by the Using Service, an interface with the access control system to provide annunciation on the local nurse call system if there is an attempt to make an unauthorized entry/exit from the unit shall be provided. This particularly applies to the pediatric and psychiatric nursing units, nursery, and surgical suite.

11.12.1.9 Telephone System Interface. If required by the Using Service, interconnection with the telephone system to provide for remote answering of patient nurse calls by use of any telephone in the facility.

11.12.1.10 Patient Information Interface. Provisions shall be provided, if required by the using service, to the facility information system hospital patient information system.

11.12.2 Station Locations. Local master stations will be provided on each inpatient nursing unit, labor and delivery suite, surgical suite, surgical recovery, nursery, and emergency department. Master stations will also be provided, as required by the using service, in hemodialysis unit, cystoscopy suite, cardiac catheterization suite Oral Surgery Clinic, and radiology special procedure (Angiography, CT Scan, MRI, Nuclear Medicine) suites and other areas as required by the using service.

11.12.3 Electrical Power. AVNC systems will be on the critical branch. All separately powered equipment such as monitors shall have separate uninterruptable power supplies.

11.12.4 System components. The following paragraphs describe the many components the comprise the AVNC.

11.12.4.1 Patient Station Locations. Patient station locations will be as follows:

ROOM TYPE	MOBILIZATION BEDROOMS	NON-MOBILIZATION BEDROOMS
1 Bedroom:	1 Dual Bed Patient Station	1 Single Bed Patient Station
2 Bedroom:	1 Single Bed Patient Station & 1 Dual Bed Patient Station	1 Dual Bed Patient Station
4 Bedroom:	On each of two walls: Install 1 Single Bed Patient Station & 1 Dual Bed Patient Station.	On each of two Walls: Install 1 Dual Bed Patient Station.

In areas served by an AVNC system a single patient station will also be located in each recovery room bed module, OR patient prep/hold bed module, psychiatric bedroom (except isolation room) treatment rooms and labor/birthing room.

11.12.4.2 Cord Sets. A minimum of one cord set with entertainment controls, pillow speaker and lighting controls will be provided per station. The Using Service will determine the number of pressure pads required for each facility. Psychiatric patient bedrooms will be provided with push buttons in lieu of pillow/speaker controls.

11.12.4.3 Psychiatric Seclusion Rooms. Audio patient stations will consist of a speaker and microphone and will be mounted in the seclusion room ceiling. All components will be tamperproof.

11.12.4.4 Psychiatric Push Button Stations. Psychiatric push button stations will be provided in each seclusion room and will be provided in lieu of emergency call cords at all psychiatric toilet, shower and tub fixtures. All components will be tamperproof.

11.12.4.5 Psychiatric Key Switch. Psychiatric key switches will be provided outside the seclusion room door. This switch will activate the emergency call switch inside the seclusion room.

11.12.4.6 Emergency Pull Cord Stations. Emergency pull cord stations will be provided in each public toilet, patient toilet, shower, tub, and at each CCU and ICU toilet/lavatory location, except in psychiatric patient areas.

11.12.4.7 Emergency Push Button Stations. Emergency push button stations will be provided at each nursery intensive, continuing care, and isolation bassinet location; in each normal, admission, and observation nursery; and each parent feeding space.

11.12.4.8 O R Stations. Stations will be provided in each operating room, cystoscopy room, cardiac catheterization, Angiography procedure room and nursery procedure room. Two switch stations will be provided in the delivery and birthing room, one to support the mother and one to support infant resuscitation.

11.12.4.9 Auxiliary Medical Device Alarm Jack. Auxiliary medical device alarm jack will be provided on each patient station, one per bed, except in CCU and ICU. Two, one on each side of the bed, will be provided in CCU and ICU.

11.12.4.10 Duty Stations. Duty stations provide and audio intercom capability plus visual and audible annunciation of calls on the system. Duty stations will be provided in the staff lounges, patient/prep hold, clean core, decontamination, equipment cleanup and storage, and anesthesia clean and soiled workrooms; linen, equipment, and supply storage rooms; trash rooms; treatment rooms; nourishment pantry; mediprep; staff work rooms; tub/shower rooms; and nurseries.

11.12.4.11 Staff Stations. Staff stations provide an audio intercom capability and will be provided in nurse, NCOIC, and ward master offices; dayrooms; conference, waiting, interview, pediatric play, operating, delivery, emergency, cystoscopy, cardiac catheterization, and Angiography rooms; isolation and seclusion room anterooms; and nursery parent teaching/feeding and procedure rooms.

11.12.4.12 Dome Lights. Dome lights without a tone device will be provided outside the entrance to each room which has a patient station, psychiatric push button station, emergency pullcord, emergency push button, and elbow switch for emergency calls.

11.12.4.13 Zone Dome Lights. Zone dome lights will be provided at corridor intersections to direct traffic to the call origination point.

11.12.4.14 Central Equipment Panels. Central equipment panels will be located in communications closets nearest the area served.

11.12.4.15 Central Printer. Central printer, if required by the Using Service, will be located in the central communications room.

11.12.4.16 Patient Bed Devices. The Designer shall coordinate with the equipment to determine if beds with integral devices are to be provided. The appropriate connections, coordinated with the equipment shall be provided for connection of Nurse call and telephone system to the bed equipment.

11.12.5 System features.

11.12.5.1 Network Operation Modes. Each equipped unit will be an operating zone of a floor level network. Operating zones and network modes will function as follows:

11.12.5.2 Operating Zone Mode. Each unit can operate as an independent zone with all calls from within the unit routed to the local zone master station in the unit. When in operating zone mode, the local zone master station has full dedicated use of all system features and intercom channel. No system busy signals will be allowed.

11.12.5.3 Network Mode. All functions and programmed patient data from any local zone master station can be captured by and combined with the functions and patient data of any other master station in the network. Anyone master station can handle all calls from any combination of operating zones or an entire network.

11.12.6 Call Types. The following are the types of calls signaled.

11.12.6.1 Patient Call. Patient call for routine or priority assistance from a patient bed.

11.12.6.2 Patient Call Cord Set Disconnect. Patient call cord set has been disconnected from the patient bedside station (will signal an emergency call).

11.12.6.3 Emergency Patient or Staff Call. Patient or staff call for emergency assistance from any patient or emergency call station.

11.12.6.4 Medical Device Alarm. Alarm signal from a patient bedroom indicating that an attached medical device needs service.

11.12.6.5 Staff Intercom Call. Staff intercom call from a staff or duty station location.

11.12.6.6 Reminder Call. Master station attendant call/signal to dispatch and remind staff that assistance is needed at a patient location as a result of a patient or staff call.

11.12.7 Tone and Light Call Signal.

11.12.7.1 Call Annunciation. Each call will annunciate throughout a unit by various combinations of illuminated lights and tones.

11.12.7.2 Annunciator Lights. Light colors, with steady or flashing illumination, will allow adequate distinction between call types and priorities.

11.12.7.3 Tone Annunciation. Tone signals will sound at the master, staff and duty stations only. Tone signals will sound at different intermittent pulse rates to allow adequate distinction between call types and priorities.

11.12.7.4 Annunciation Coordination. Tone and light signals for each call type and priority will be consistent for all tone/visual and AVNC systems.

11.12.8 Call Priorities.

11.12.8.1 Call Prioritization. Processing of calls will be sequenced in a 4

level priority rank order, from a high of number 1 to a low of number 4, as listed below.

Priority Number	Call Category
1	Emergency
2	Priority
3	Medical Device Alarm
4	Routine

11.12.8.2 Multiple Call Priorities. When more than one call is present on the system at any one time, the highest priority call will take precedence.

11.12.9 Radio Page Capability. AVNC system networks will be provided radio page capability so that calls registered on a network can be relayed to radio pagers carried by staff. Radio pages can also be originated from master stations and the telephone attendant consoles. AVNC radio page system maybe combined with the wide area radio page system.

11.12.9.1 Message Types. Pagers will be able to receive the following types of messages:

11.12.9.2 Priority Alert Tones. At least three distinct alert tones to indicate the priority of the digital display or voice message being paged.

11.12.9.3 Alpha Numeric Message. An alphanumeric digital display message, including room/bed number and type of call.

11.12.9.4 Voice Message. Brief voice messages from a telephone attendant to convey unusual information that cannot be handled by the normal digital display message.

11.12.9.5 Pager Assignment. Duty assignment data will be programmable from any master station. The data will correlate the address number of the pager assigned to a staff member with their duty assignment by room/bed, level of care and work shift.

11.12.9.6 Call Transfer To Pager. Any patient, staff or medical device service call from a patient care location can be relayed directly to the individual or group of pagers carried by the staff assigned to the call origination point and level of care on each shift. The system will automatically perform this direct relay function to the appropriate pager by cross-referencing duty assignment and absence indication data with pager assignment and address data.

11.12.9.7 Call Transfer Function. Call relay function can be initiated in any one of the following three ways:

11.12.9.8 Attended, Semiautomatic Mode. When calls are being handled at a master station the attendant can relay a call to the appropriate pager by activating a radio page function key on the station keyboard while the call is still registered on the system.

11.12.9.9 Unattended, Automatic Mode. When a master station is unattended, the station can be switched to an automatic radio page mode where by all calls coming to the master station will automatically be relayed to the appropriate pagers.

11.12.9.10 Preprogrammed, Automatic Mode. Specific call types can be programmed for automatic relay to the appropriate pager even if the master station that normally handles the call is unattended. This will include emergency and auxiliary medical alarm service calls. Additionally, each patient station can be individually programmed for patient priority call status whereby all patient calls will be automatically relayed to the appropriate pager.

11.12.9.11 Page Origination. A radio page can be originated from any master station. A tone alert and alphanumeric digital display message can be originated by use of the station keyboard. The message may be either a preprogramed message or a free text message. The page can be routed via duty assignments by keying in the room/bed number or directly to an individual or group by keying in their pager address number.

11.12.9.12 Master Stations. Master stations that have transferred control of the operational zone to another master station will retain the capability to originate radio pages.

11.12.10 Code Blue. Code Blue is a generic phrase which is used to indicate a critical situation brought on by a cardiac arrest or similar type of immediate life threatening event. Depending on the type of health care facility and the using service criteria there can be a number of variations on Code Blue which identify different types of patients to which the code applies. The number and type of signals shall be determined by the using service. These may include, but not limited to, a code for adult patients, pediatric patients, and infants each of which will have a separate label. For the purposes of this document all such calls shall be referred to as Code Blue. The AVNC shall provide for all types of Code Blue calls to be implemented by the using service in the facility. All Code Blue calls shall share the highest priority on the AVNC system.

11.12.10.1 Code Blue Call Locations. The using military service shall decide where Code Blue signaling devices are required. It is strongly recommended that Code Blue signaling be provided in all areas covered by the AVNC system. A neonatal code signaling system is highly recommended in all baby care areas such as LDRP rooms and the nursery. A pediatrics code signaling system is highly recommended in the pediatrics ward and the emergency department. It is also recommended that code buttons be installed as separate, stand alone buttons in a single gang faceplate. Code Blue stations should be installed on each side of the patient service console to facilitate easy access by the attending staff. The following locations are strongly recommended for Code Blue stations: each inpatient bed; each OR; each delivery room; each cystocopy room; each bronchospy room; each oral surgery operatory; each LDRP room; each nursery; each baby care area; each emergency exam treatment room bed; each trauma room bed; each pre-op and post-op surgery patient hold cubicle; each inpatient exam treatment room; each stress test/treadmill room; each blood draw room; renal dialysis room; each immunization room; each x-ray room; each MRI room; each CT Scan room; each angiography room; each cardiac cath. room and each chemotherapy room.

10.12.10.2 Code Blue system Operation. The system shall be capable of activating the AVNC radio page interface in the event of a Code Blue call. The system shall transmit to the radio page encoder the type of call and the location by room and bed number in the facility. The radio page shall be sent to a specific group of pagers carried by the response team. The system shall also send the type of code call, room and bed number to the AVNC Code Blue

annunciator panel which shall display all active Code Blue Calls on the system. The Code Blue annunciator panel(s) shall in a location which is staffed 24 hours a day such as the main reception desk, information desk or emergency room nurses station. The AVNC system shall also annunciate Code Blue calls with unique audible and visual signals on the Master Stations, duty stations, unique color and flash sequence on AVNC dome lights.

11.12.11 Service Dispatch Reminder. If during a patient call the master station attendant determines that a patient needs staff assistance the attendant can signal this need If service is not rendered within a specified time period, the system alerts the attendant by appropriate signaling at the master station.

11.12.12 Patient Station Privacy Mode. Any patient station can be switched to operate in a privacy mode. When a patient station is in the privacy mode, the attendant at the master station cannot monitor sound from the patient room. While in this privacy mode, the patient can still receive or originate a call. When the call is complete, the patient station will return to the privacy mode.

11.12.13 Master Station Features. Master stations will include the following features in addition to those specified above:

11.12.13.1 Call Sequencing. Calls can be sequenced for answer in accordance with call priority rank order and time of placement. This normal sequence can be bypassed and calls answered in any order.

11.12.13.2 Priority Programming. Capability to program and review priority rating of patient station.

11.12.13.3 Voice Intercom Calls. Place voice intercom calls to patient stations, staff and duty stations by dialing the stations number. If the called patient station is in the privacy mode, the patient has to activate the nurse call push button/pad before answering the call.

11.12.13.4 Audio Monitoring. Audio monitor of any one patient station that is not in the privacy mode.

11.12.13.5 Handsfree Mode. Calls are placed and answered in a handsfree mode. A handset is provided privacy when placing or answering calls.

11.12.13.6 Call Display. Capability to display a minimum of 3 incoming calls, holding all other calls in memory until answered.

11.12.13.7 Feature Programming. Capabilities to initialize, review and update all programmable system features, variable data, radio pager duty assignment, and patient data.

11.12.14 Patient Station Controls. Patient entertainment and light control:

11.12.14.1 Light Controls. Reading and general lights can be controlled by activating light control switches on the cord set connected to the patient station, except in psychiatric patient bedrooms and seclusion rooms.

11.12.14.2 Television controls. In patient bedrooms where the TV set is mounted on the footwall or ceiling, the patient can also control/listen to TV

channels through use of a pillow speaker type cord set connected to the patient station. TV controls include TV set on/off, channel selection and volume.

11.12.14.3 Alternate Cord Sets Types. A push button or pressure pad cord set can be used in conjunction with a pillow speaker/light control cord set.

11.12.14.4 Pressure Pad Cord Sets. It is also possible to use a dual pressure pad cord set to control two functions, nurse call and footwall TV set control, or nurse call one light control. It is not possible to use a push button or a geriatric pressure pad cord set to control TV volume on footwall mounted TV sets.

11.12.14.5 Cord Set Holder. A wall bracket will be provided to hold the cord sets when not in use.

11.12.15 Operational Statistics Printer. Printout of operational statistics. A printer, if required by the Using Service, will be located in the central communications room. The system shall be capable of providing printouts of real time call data by room and bed. This data shall include the time each call is placed, answered at the master station, set on service reminder, and canceled. Only one printer is required with a switching capability to selectively record the statistics from any AVNC system network.

11.12.16 Access Control System Interface. Remote access control alarm: By interfacing the nurse call system with the access control system, it is possible to locally annunciate any unauthorized entry/exit from the pediatric and psychiatric nursing unit, surgery, mother-baby unit and the nursery.

11.12.17 Telephone System Remote Answer Interface. An interface between the nurse call system and the telephone system, if required by the using service, shall be provided. The interface shall allow the use of any telephone on the unit to remotely answer any call from a patient station, staff or duty station when the nurse call master station is unattended.

11.13 PUBLIC ADDRESS (PA) AND PROGRAM DISTRIBUTION SYSTEM.

11.13.1 System Components. The system will consist of the following components.

11.13.1.1 Antenna. An antenna suitable for reception of FM stations will be provided on the roof. A conduit for RF signal cables will be installed from the antenna to the headend equipment located in the communications headend equipment room. This equipment shall be located in the main communications room/closet in facilities without a head end equipment room.

11.13.2 Headend Equipment. The headend will contain the following equipment:

11.13.2.1 FM Radio Receivers. FM Radio receivers shall be provided for the reception of off air radio programming.

11.13.2.2 Background Music Sources. Compact disc player/changer shall be provided if desired by the using service to supply background music to the system.

11.13.2.3 Auxiliary Inputs. Rack space and preamplifier input ports for two

auxiliary inputs shall be furnished to support Using Service provided devices.

11.13.2.4 Preamplifiers and Power Amplifiers. Preamplifiers and power amplifiers shall be provided.

11.13.2.5 Monitor Panel and Selector Switches. Monitor panel with selector switch and speaker to check each zone output shall be provided.

11.13.2.6 Voice Input and Zone Selection. Microphone, zone selector switch and telephone interface module for paging shall be provided. The number of telephone subscriber lines provided will be based on the system configuration. One subscriber line per zone or one subscriber line per system shall be provided. Zone dial selection equipment shall be part of the PA system. Control functions such as call answer, tone announcement before the page, and automatic, preset time-out will be done by the interface module.

11.13.2.7 Input Selection Switch. Input selection switches for connecting program inputs to the distribution system.

11.13.3 Loudspeaker System. Low power speakers will be used to provide uniform sound distribution at a low volume levels. For maximum coverage, corridor speakers will be spaced at a maximum of twice the ceiling height apart. Speakers located in individual rooms will be provided with separate volume controls. Paging speakers in designated areas such as a pediatrics clinic will be provided with a volume control and bypass relay for override during paging. Table 11-6 provides guidance for speaker functions to be provided in each area.

11.13.4 System Configuration. The system shall be configured in accordance with the following.

11.13.4.1 All Call. An all zone paging capability, which shall have priority over all other paging will be provided in every facility. All-call may be accessed via a microphone in the central communication room or via telephone. The microphone access has priority over the telephone access.

11.13.4.2 Wide Area Zone. Each hospital will be zoned by functional areas - nursing tower, outpatient clinics, energy plant, and ancillary areas. Wide area paging will have priority over all local paging. Microphone access has priority over the telephone access. These zones may be accessed via a microphone in the central communication room or via telephone.

11.13.4.3 Local Zones. For each ancillary or administrative department or outpatient clinic where patients are seen for diagnosis or treatment, such as radiology or physical therapy, paging zones will be established for both patient and staff areas. Local zones will be accessed the telephone system. In ancillary areas which only provide support, such as central material services, only a staff zone will exist. The microphone access for the areas will be at the department secretary or NCOIC office. Local zone paging may be overridden by wide area zone or all zone paging. A music volume control with bypass relay for paging will be provided at the same location as the microphone.

11.13.4.4 Music Only Speakers. Music only speakers will be provided at locations where staff or patient paging is not required but music is desired. A volume control will be provided in each music only area.

11.13.4.5 Functional Area Zones. See table 11-6 for zones provided in functional areas.

11.13.4.6 Speaker Locations. Speakers will never be provided in the following: private or multi-occupancy offices; recovery rooms; exam rooms; libraries; patient bedrooms and staff sleeping rooms.

11.13.4.7 Sound Reinforcement Systems. Local sound systems, to include microphones, speakers, and amplifiers, not connected to the program distribution system, will be provided in chapels, auditoriums, and large conference rooms.

11.13.4.8 Medical/Dental Clinic Zoning. A separate zone for medical and a separate zone for dental will be provided in combined Medical Dental clinics. An all call for the entire facility will be maintained.

11.13.4.9 Microphone Quantities. The installation of microphones will be limited. The using Service will provide guidance on the number and location of microphone stations. Telephone system input is the preferred method.

11.14 RADIO PAGING SYSTEMS.

11.14.1 Radio Paging. One ultra high frequency (UHF) paging systems will be provided for 100 percent coverage within the health facility. The recommended method is to furnish the system as part of the construction contract. Leasing radio paging service is an option from a local provider. An economic analyses shall be performed to determine the most advantageous solution.

11.14.2 Pager Distribution. Pagers will be provided for all professional and support personnel who either frequently work away from their primary areas or whose services are required on call.

11.14.3 System Function. The system will utilize tone and vibration alert paging receivers that display an alpha numeric message. Each pager will be accessible by dialing a discrete set of digits via the telephone system. Access will also be possible through a central control console within the health facility or through the audio visual nurse call system. Facility design shall include space in penthouse area, AC power and conduit for control and coaxial cables. The radio page system shall interface with the nurse call system if required by the using service.

11.14.4 Emergency Response Team Pagers. Pagers assigned to members of the code and other emergency response teams will provide at least 3 separate and distinct annunciations; one for routine calls and one for emergency calls. These pagers will have two separate access codes, one for routine and one for group alerting. The group alerting code will signal all units simultaneously.

11.14.5 Antennae Type and Mounting. Antenna type and mounting height will be selected to provide complete facility coverage. Conduit must be provided from the encoder to the transmitter location and from there to the antenna.

11.14.6 Power Requirements. All radio paging equipment will be connected to the life safety branch of the emergency power system and rated for continuos duty.

11.15 EMERGENCY MEDICAL SERVICE (EMS) COMMUNICATIONS. The EMS system

consists primarily of GFGI radio equipment which is used for voice and telemetry communications with military and civilian ground and air ambulances. Multiple radios are used at each location and the basic task for the designer is to provide site support for the GFGI equipment. Remote control units for the radio transceivers are included with the radios and these will usually be installed in ambulance dispatch or in the emergency room nurse's station for receiving voice and telemetry. The radio transceivers are normally installed in the penthouse equipment room although some transceivers have no remote control unit and will be installed in ambulance dispatch. Information must be obtained on the GFGI equipment to provide the required site support. Additional service specific requirements are included in reference Naval Installations EMS installations shall comply with BUMED Instruction 6320.80(emergency medical system).

11.15.1 Electrical Power. Power will be provided for all radios and remote control units from the life safety branch of the emergency system when available.

11.15.2 Empty Conduit and Boxes. Junction boxes and empty conduits will be provided with pull wires to install cables. Provide conduits from the penthouse to the antennas mounted on the roof and when required, conduits for coax from ambulance dispatch to the penthouse antennas.

11.15.3 Structural Support. Structural support and sufficient mounting space will be provided for the antennas.

11.16 PHYSIOLOGICAL MONITORING. An empty conduit system with pull wires will be provided for installation of GFGI equipment and cable for the monitoring system. All equipment including monitors, computers, and printers will be connected to the critical branch of the emergency power system. A GFGI uninterruptible power supply (UPS) will be provided by the using Service.

11.16.1 Cardio-Pulmonary Respiratory Monitoring. Data entry points will be monitored by a central computer. A minimum of one 25mm (1 inch) conduit with pull wires will be provided from each data entry point to the communication system cable tray. Conduits with pull wire will be provided from the central physiological monitor computer room to the communication system cable tray. As a minimum data entry/monitor points will be provided as follows:

11.16.1.1 Emergency Room. Each trauma room, treatment room, treatment cubicle, and the nurses station. At the nurses station provide conduit to both the printer and monitor locations.

11.16.1.2 Surgical Suite. Each operating room, with outlet located in ceiling service console; Each recovery bed including the isolation rooms; recovery area nurses station; and the anesthesia work room. At the recovery area nurses station provide conduit to both the printer and monitor locations.

11.16.1.3 Urology. Each cystoscopy room.

11.16.1.4 ICU/CCU. Each bed and nurses station. At the nurses station provide conduit to both the printer and all monitor locations.

11.16.1.5 step-down Units. At the nurses station provide conduit to both the printer and all monitor locations.

11.16.1.6 Labor And Delivery. Each delivery room, with outlet located in ceiling service console; Each labor room; each recovery bed, and nurses station. At the nurses station provide conduit to both the printer and all monitor locations.

11.16.2 Fetal Monitoring. A conduit with pull wire will be provided from each delivery room, labor room, stress test room, exam/prep room and birthing room to a pull box above the ceiling at the labor and delivery nurses station. A minimum of one conduit with pull wire will be provided from the pull box to the nurse station for the monitors.

11.16.3 Neonatal Monitoring. A conduit with pull wire will be provided from each intensive and continuing care bassinet location, LDR, LDRP and each isolation room to a pull box above the ceiling at the nursery nurses station.

11.16.4 Anesthesia And Respiratory Gas Analysis System. Conduit with pull wire will be provided from each operating room ceiling column, from 25 percent of the patient service consoles in the surgical suite recovery area, to include the isolation rooms; each cyctoscopy room at the head of the table; each delivery room ceiling column, and one delivery recovery bed patient service console. Conduits with pull wires will be provided to the anesthesia workroom where the analyzer and central processing unit are to be located. Conduit will be provided to the anesthesia office suite and the blood gas lab for printer or cathode ray tube units.

11.17 SPECIAL MONITORING EQUIPMENT. Monitor panels for hospitals and Medical Centers will be provided in a 24 hour staffed location to monitor the operation of critical hospital systems and equipment per NFPA 70. If an Energy Monitoring System is furnished for the facility, the alarm points may be made part of that system and a separate monitor need not be installed. The exceptions are medical gas and the emergency generator monitors, which must be a dedicated system.

11.17.1 Refrigerator Unit. A signal circuit will be provided from the blood bank, food service, autopsy, allergy injection, immunization and pharmaceutical (pharmacy and logistics) units to indicate loss of electric power or excessive temperature or each refrigerator.

11.17.2 Medical Gas Alarms. Alarms for each piped medical gas system will be provided. (See section 9).

11.17.3 Power System Monitor/Annunciator. Key functions of normal and emergency electrical power system will be monitored and will include status indicators and alarms as listed in NFPA 70 and NFPA 99.

11.17.4 Stand Alone Clinic Refrigerator Alarms. Refrigerator alarms for stand alone clinics shall be connected to a remote staffed location. Connection of the alarms to an Energy Monitoring system, if available, will accomplish this requirement.

11.18 ELECTRONIC SECURITY SYSTEMS. Security within a Medical Treatment Facility may be accomplished with an intrusion detection system, door access systems, and CCTV surveillance or a combination of the above.

11.18.1 Intrusion Detection Systems (IDS). Empty conduit raceways and outlet boxes with blank covers will be provided for the future GFGI

installation of an IDS system. The site preparation for this system will include allocation of space in a protected area for a control unit, monitor station and signal processing equipment as well as remote sensors. Intrusion detection system locations and sensor types to be provided for are as follows:

Location	Balanced Magnetic Switch	Ultrasonic Motion Detector	Duress Alarms
Inpatient and outpatient Pharmacy	X	X	
Inpatient and Outpatient Pharmacy dispensing Window(s)	X	X	X
Emergency Department			X
Pharmacy Vault	X	X	
Cashier office	X	X	X
Logistics vault	X	X	
Logistics warehouse	X	X	
Silver recovery central Collection point	X	X	
Mental Health			X

The above table is provided for general guidance. Specific design shall be in accordance with the using Service guidance.

A magnetic switch shall be placed on each door or window that could provide access. The motion detector shall cover the entire area. Video monitoring and recording will be activated by the intrusion detection and duress alarms (See paragraph CCTV surveillance). Intrusion Detection system design will follow the established industry guidelines.

11.18.2 CCTV Surveillance. Provisions will be made for GFGI CCTV surveillance equipment. Conduits with pull wires, outlet boxes, and electrical power will be provided for the following suggested locations: cashier office, cashiers in food service and installation exchange, vaults, stairwell exits on pediatric and psychiatric nursing units and nursery, computer room, emergency and acute minor illness waiting and reception areas, corridors connecting buildings, pharmacy dispensing windows, building entrances and exists, elevator lobbies, loading docks, parking lots, and ground floor mechanical rooms. The system will be designed such that a camera will be activated by an intrusion detection alarm or an attempt at unauthorized access at a card reader. Monitors will be located in a staffed location.

11.18.3 Door Access Systems. An electronic door access system will be provided where required by the using Service. The system will be complete and will include all monitor and control equipment and equipment to produce cards to discontinue access authorization for issued cards, maintain and provide a listing of current authorized access by individual, location, and time. An interface will be provided between the CCTV system and the Door Access System

to initiate video monitoring and recording anytime these doors are opened unless an authorized access card has been read by the card reader. This is further defined in paragraph, "CCTV Surveillance." An electronic door access system will be provided at the following locations:

-Selected building entrances.
-Each exterior door to the 1st floor mechanical equipment rooms.
-Each storage room entrance door
-Each Pharmacy Door
-Each Pharmacy vault door
-Each computer room door
-Each cashier office door
-Each Psychiatric Nursing Unit entrance door

11.19 EMS RECORDER SYSTEM. A multichannel recorder system will be provided as GFGI in hospitals and medical centers. The system will include the following functions and features:

11.19.1 EMS Recorder Function and Features. The EMS recorder will typically be installed in the Ambulance dispatch area. The system will be used to record voice communications on selected telephone lines and all EMS radios. The telephone lines recorded shall include but not be limited to the Emergency room Nurses Station and the Ambulance Dispatch telephones. The actual lines to be recorded shall be determined by the using military service. Two way audio from each of the EMS radios shall be recorded. The recorder shall as a minimum have the following characteristics:

Record media shall have a minimum of 24 hours of recording capacity.

A minimum of 10 channels plus one channel which records time in hours, minutes and seconds for record retrieval.

A microprocessor based control system which provides both system control and diagnostics.

A rapid search system which enables fast retrieval of time dated information

Tape search and play back from a historical tape while the system is still recording the prescribed channels.

11.9.2 System Inputs and Mounting The system will accommodate multiple input impedances to allow recording from the varied media identified. The system shall be rack mounted in a free standing cabinet.

REFERENCES

11a.Uniform Federal Accessibility Standards

11b. Americans with Disabilities Act

11c. NFPA 70, “National Electric Code”

11d. NFPA 99, “HealthCare Facilities”

11e. NFPA 101, “Safety to Life from fire in Buildings and Structures”

11f. ANSI/TIA/EIA 568, “Commercial Building Telecommunications Cabling Standard”

11g. ANSI/TIA/EIA 569, “Commercial Building Standard for Telecommunications Pathways and Spaces”

11h. ANSI/TIA/EIA 606, “Administration Standard for the Telecommunications Infrastructure of Commercial Buildings”

11i ANSI/TIA/EIA 607, “Commercial Building Grounding and Bonding Requirements for Telecommunications”

11j ANSI/TIA/EIA 758, “Customer–Owned Outside Plant Telecommunications Cabling Standard”

11k MIL – HNBk- 1012/3, “Telecommunications Premises Distribution Planning, Design and Estimating”

TABLE 11-1

EMERGENCY POWER BRANCH ASSIGNMENT FOR COMMUNICATION SYSTEMS

COMMUNICATIONS SYSTEMS	BRANCH ASSIGNMENT
TSS Telephone	Life Safety
Public Address and Program Distribution	Life Safety
Radio Paging	Life Safety
Physiological Monitoring	Critical
Emergency Medical Service (EMS) Radios	Life Safety
LAN Electronic Equipment **	Critical
Nurse Call	Critical
ELECTRONIC SECURITY	
IDS	Equipment
CCTV	Equipment
SPECIAL ALARM MONITORING EQUIPMENT	
Medical Gas	Life Safety
Blood Bank	Life Safety
Morgue Refrigerators	Equipment
Food Service Refrigerators	Equipment

** For the purposes of this document LAN electronic equipment does not include any individual computer workstations. Individual computer workstations will need to be addressed on a case by case basis with the using military service.

TABLE 11-2 CRITICAL CARE AREAS THAT REQUIRE EXECUTIVE BRIDGING FEATURE
Each Nurse's Station
Each Operating Room and control station
Emergency Room Reception / Nursing Station
Pharmacy: Intravenous (IV) Additive and Unit Dose
Pathology: Reception, Blood Bank, frozen section and Stat Lab
Radiology Reception
Cardiology Clinic Reception
Respiratory Therapy Blood Gas Lab
Each Delivery Room, suite and recovery room
Obstetrics/Gynecology Clinic Reception
Cardiac Cath
Angiograph Rooms
Obstetrical,Medical/ Surgical, OD and Pediatrician Sleep Rooms
Linear Accelerator Control Station
Magnetic Resonance Imagery Control Station
Contamination Control Area
Hyperbaric Medicine

TABLE 11-3

TELEPHONE FEATURE CHART																
	HOSPITAL HEALTH CLINIC												DENTAL CLINIC			
FEATURE	A	B	C	D	E	F	G	H	I	J	K	L	P	Q	R	S
Call Transfer/ Consultation Hold/3 Party Conference	X	X	X	X	X	X	X	X	X	X	X		X	X	X	X
Camp-On	X	X	X	X	X	X	X	X	X	X	X	X	X	X	X	X
Progressive Conference	X	X	X	X	X	X		X					X			
Abbreviated Dial	X	X		X	X	X										
Executive Bridging	X	X														
Do Not Disturb	X		X			X		X		X						
Call Forwarding	X		X			X					X					
Radio Paging System	X	X	X	X	X	X	X	X	X	X	X	X	*			
Voice mail	X	X	X			X							X			
Public Address System	X	X					X							X	X	
Central Dictation	X	X	X	X		X		X					*			
Code Blue	X	X	X	X	X	X	X	X	X	X	X	X	*	*	*	*

* Used only when Dental Clinic is in a hospital.

The above table is provided as guidance and contains only a limited number of the possible features available. The actual table for each facility will be developed with the using service.

Caller ID shall be considered for selected areas identified by the using service.

TABLE 11-4

FUNCTIONAL AREA TELEPHONE REQUIREMENTS				
Area	Instrument Type	Features	Class	Notes
ADMINISTRATION AND TRAINING AREAS				
COMMAND SUITE				
Commander	ES	A	AA/A	1
Secretary	E	A	AA/A	1
Deputy Commander for Clinical Services	ES	A	AA/A	2
Deputy Commander for Administration	ES	A	AA/A	2
Judge Advocate General	ES	F	AA/C	2
Inspector General	E	F	AA/C	2
NCOIC	E	F	A/C	2
Information Management Officer	E	F	A/C	2
Command Admin	E	K	A/C	3
Public Affairs	D	F	A	
Blank Forms	W	K	H	
Mail Room	W	K	H	
Message Center	D	K	C	
Record Forms Management	D	K	A	
Reproduction	W	K	H	
US Post Office	D(C)			5
Commanders Conference Room	WS	A	AA	
NURSING ADMIN				
Chief Nurse	ES	A	AA/C	2
Asst. Nurse	ES	A	AA/C	2
Secretary	E	F	AA/C	2
Chief Ward Master	E	A	A/C	2
Chief of Nursing Section	D	A	A/C	2
NCOIC of Nursing Section	D	A	A/C	2
Chief of Ed & Training	D	F	AA/C	2
Infection Control	D	F	A/C	2
Quality Assurance	D	F	A/C	2
PATIENT ADMIN				
Air Evac AMB Attendes	W	L	H	
Air Evac Control	D/W	B	AA	
Air Evac Staging	W	L	H	
Champus Advisor	D	K	AA	

TABLE 11-4

FUNCTIONAL AREA TELEPHONE REQUIREMENTS				
Area	Instrument Type	Features	Class	Notes
Claims	D	K	A	
Patient Affairs	D	K	A	
Baggage	W	L	H	
Satellite PAD	D	K	A	
Interview	D	L	H	
Cashier	D	L	H	
Medical Boards	D	K	AA	
Medical Records	D	I	A/C	
Medical Records Admin	D	E	A/C	
PERSONNEL				
Commander, Medical Holding	D	F	AA	
Physician Recruiter	D	F	AA	
Liaison Officer	D	F	AA	
Senior Enlisted	D	F	A	
Reenlistment NCO	D	F	A	
Career Counselor	D	K	C	
PLANS OPS AND TRAINING				
Classrooms	WS	I	H	
Skills Labs	WS	I	H	
Library Area	W	L	H	
Instructor	D	K	C	
Command Operation Center	D	B	AA/C	3
Auditorium	W	L	H	
Audio Projection	W	L	H	
Production Taping Room	D/W	L	H	5
Audio Visual Programming and Distribution	D/W	L	H	5
ANCILLARY SUPPORT AREAS				
CENTRAL COMMUNICATION SECURITY				
Central Communication	C			4
Security	E	G	A	
FOOD SERVICE				
Receiving	DS	L	H	
Office	WS	G	H	
ADP Coding	DS	K	H	
Main Dining Room	W	L	C	
Kitchen	WS	L	H	
Servery	WS	L	H	
Meat Prep	WS	L	H	
Cashier Stations	DS	L	H	
Storage	WS	L	H	
Serving Line	W	L	H	

TABLE 11-4

FUNCTIONAL AREA TELEPHONE REQUIREMENTS				
Area	Instrument Type	Features	Class	Notes
Tray Assembly	WS	L	H	
Ingredient Room	WS	L	H	
Bakery	W	L	H	
Height Weight Screen	W	H	H	
LOGISTICS				
Biomed Files & Records	W	L	H	
Equip Receiving	W	L	H	
Parts Clerk	D	K	H	
Work Stations	W	L	H	
Reference Room	W	L	H	
Chief, Procurement	D	F	AA	
Admin Office (Procurement)	D	K	A	
Central Processing and Distribution (Issue & Receiving)	W	K	H	
Uniform Service	D/W	L	C	6
Seamstress	D	L	H	
Inventory Mgt. (Clerk)	D	K	H	
Analyst	D	F	A	
ADP Equipment (Logistics)	W	K	H	
Special Security Vault	W	L	H	
Housekeeping Supv	D	K	C	
Receiving Supv	D	K	H	
Receiving Admin	D	K	H	
MEDICAL LIBRARY				
Librarians Office	D	F	AA	
Library Workroom	D	K	C	
PHARMACY				
Dispensing Station	D/W	L	H	6
Drug Information Office	D	L	C	
I.V. Additive Station	E/W	E	H	6
Mfg./Prepackage & Storage	D/W	E	H	6
Unit Dose Assembly	E/W	L	H	6
Vault	W	L	H	
PLANT MAINTENANCE				
Engineer Liaison Officer	E	F	A/C	1
Secretary	E	F	A/C	1
Chief Plant	D	I	A	

TABLE 11-4

FUNCTIONAL AREA TELEPHONE REQUIREMENTS				
Area	Instrument Type	Features	Class	Notes
Engineer				
Drafting & Files	D	L	H	
Maint Foreman	D	G	C	
Work Order Clerk	D	K	C	
Work Stations	W	L	C	
Drawing Area	D	L	H	
PATHOLOGY				
Dark Room	W	L	H	
Film Processing	W	L	H	
Studio	W	L	H	
Gross Specimen Lab	W	L	H	
Lab/Procedure Test	W	K	H	
Blood Drawing Room	W	K	H	
Ultrathin Section	W	L	H	
Tissue Storage	W	L	H	
Autopsy Room	W	C	H	
Tissue	W	L	H	
Donor Area	W	L	H	
Blood Bank Lab	E	E	AA	
Electron Microscope	D	C	H	
Hemophoresis/Blood Drawing	W	L	H	
HLA Module	W	L	H	
RIA Hepatitis Module	W	L	H	
Immunologist	D	F	A	
RADIATION THERAPY				
Treatment Planning Room	D	C	A	
Linear Accelerator	W	I	H	
Central Monitoring	W	I	H	
Simulator Room	W	I	H	
RADIOLOGY				
Chief Radiology	E	F	AA/C	1
Secretary	E	F	AA/C	1
NCOIC	E	F	AA/C	2
Angiograhphic	WS	C	A	
Barium Prep	W	L	H	
Blood Gas Lab	W	E	H	
Cardiac Catheterization	WS	C	A	
Central Monitoring	D/W	C	A	
MRI Control Room	W	C	A	
C. T. Control room	WS	C	A	
Chest Room	W	I	H	
Cinefilm Viewing	D	C	H	
Film files	D/W	I	A	6
Film Issue	D/W	I	A	6

TABLE 11-4

FUNCTIONAL AREA TELEPHONE REQUIREMENTS				
Area	Instrument Type	Features	Class	Notes
Film Reading	D	C	H	
Radiographic/Fluoroscopic Control	W	I	H	
Mammography	W	I	H	
Staff Work Area	D	C	H	
Special Procedures (SP)	WS	C	A	
SP Monitoring	D/W	C	A	6
Ultrasound	W	I	H	
Viewing & Consultation	D	C	H	
NUCLEAR MEDICINE				
Special Imaging Room	W	I	H	
Film Sorting/Reading	D	C	H	
Computer Room	W	K	H	
Gamma Camera	W	I	H	
Radioimmunoassay	W	I	H	
Radiopharmacy	W	L	H	
Uptake Room	W	H	L	
Film Processing	W	L	H	
OCCUPATIONAL THERPHY				
Electromyography (EMG)	D	C	A	
Evaluation	W	L	H	
Daily Living Skills	W	L	H	
Sensory Integrated Dysfunction	W	L	H	
PATIENT SERVICES				
Patient Library Workroom	D	K	C	
Patient Librarian	D	K	C	
Red Cross (RC) Director	D	F	AA	
RC Caseworker	D	F	AA	
RC Volunteer Supervisor	D	F	A	
RC Volunteers	D	L	H	
Chapel Sacristy	W	J	H	
PHYSICAL THERAPY				
Burn Tank	W	B	A	
Contour Tank	W	L	H	
Hydrotherapy	W	L	H	
Exercise Rehabilitation		L	H	
Treatment Cubicles		L	H	
CLINIC ADMIN				

TABLE 11-4

FUNCTIONAL AREA TELEPHONE REQUIREMENTS				
Area	Instrument Type	Features	Class	Notes
Central Dictation Supv	E	K	C	9
Central Dictation Staff	E	L	H	9
Appt Clerk Supv	ES	G	AA	
Appt Clerk	E	G	A	
AUDIOLOGY				
Audiobooth Control	W	J	H	
BAER Room	W	C	H	
Bone Dissection	W	I	H	
Hearing Aid Fitting	W	L	H	
Hearing Aid Lab	W	L	H	
Vestibular Exam	W	C	H	
CARDIOLOGY				
Echo	W	C	A	
ECG Test	W	C	A	
ECG Work	W	C	A	
Treadmill/Stress Test	W	C	A	
Vector	W	C	A	
DENTAL				
Chief Dentistry	ES	F	AA/C	1
Secretary	E	F	AA/C	1
NCOIC	E	F	AA/C	2
Ceramics Lab	W	I	H	
DTR	W	I	H	
Office/Consultation	D	F	A	
Oral Hygiene DTR	W	I	H	
Oral Surgery	ES	B	A	
Plaque Control	W	I	H	
Prosthetics Lab	W	I	H	
Records/Transcription	D	I	C	
Recovery	W	J	H	
Sterilization/Scrub	W	I	H	
Supply	W	K	C	
Utility Workroom	W	I	H	
Work Core	W	I	H	
Reception Clerk	E	G	AA/C	
EMERGENCY MEDICAL SERVICES				
Ambulance Dispatch	D	G	A	
Ambulance Drivers	D	L	H	
Family Waiting & Consult	D	C	A	
NCOIC	D	F	A	
Nurse Office	D	A	A	

TABLE 11-4

FUNCTIONAL AREA TELEPHONE REQUIREMENTS				
Area	Instrument Type	Features	Class	Notes
Nurse Station	E	A	AA/C	
Observation	W	H	H	
Trauma Room	W	B	H	
Treatment Room/Cubicle	W	H	H	
MULTI-CLINIC AREAS				
Reception Desk	E	G	A/C	
Provider Office	D	C	A	1
Exam Room (All)	W	C	A	1
Endoscopic Room	W	C	A	1
Immunization Room	D	K	H	
Nurse Practitioner	D	A	A	
Prep Room	W	H	H	
Proctoscopic	W	H	H	
Recovery (Clinic)	W	H	H	
Screening Room	D	L	H	
Specimen Collection	W	L	H	
Treatment	W	H	H	
Weights & Measures	D	L	H	
NEUROLOGY				
Electroencephalogram (EEG) Test	W	C	A	
EEG Work	W	C	A	
OPHTHALMOLOGY/OPTOMETRY				
Dark Field	W	I	H	
Fitting/Workroom	W	L	H	
Ophthalmology Office Eye Lane	D	C	A	
Ophthalmic Photo Room	W	I	H	
Screening/Eye Testing	D	L	H	
Tomogram Room	W	I	H	
Visual Field	W	I	H	
ORTHOPEDICS				
Appliance Adjustment	W	L	H	
Cast Room	W	L	H	
Dark Room	W	L	H	
Gait Observation Room	W	L	H	
Laminating	W	L	H	
Machine Room	W	L	H	
Sewing & Shoe Room	W	L	H	
Welding	W	L	H	
X-ray Viewing	D	C	H	
PSYCHIATRY/PSYCHOLOGY/SOCIAL WORK				
Office,	D	C	A	

TABLE 11-4

FUNCTIONAL AREA TELEPHONE REQUIREMENTS				
Area	Instrument Type	Features	Class	Notes
Psychiatrist/ Psychologist/Social Work				
Office, Technician	D	C	A	
Group Therapy	W	J	H	
Mirror Room	W	J	H	
PULMONARY				
Bronchoscopy	W	H	H	
Spirometry	W	I	H	
Pulmonary Function Lab	W	I	H	
SPEECH				
Speech Therapy Classroom	W	J	H	
Mirror Room	W	J	H	
UROLOGY CLINIC				
Cyctoscopy/IVP Room	ES	B	AA	
Cystoscopy Control	W	K	H	
Dark Room	W	L	H	
INPATIENT CARE AREAS				
HEMODIALYSIS				
Hemodialysis Cubicle	W	J	C	
Isolation Room, Hemodialysis	W	J	C	
Nurses Station, Hemodialysis	E	B	AA/C	
Renal Studies	W	H	H	
INTENSIVE CARE/CORONARY CARE NURSING UNIT				
Bedrooms, CCU and ICU	W	B	H	
Computer Support	W	L	H	
Nurses Station, CCU & ICU	E	B	AA/C	
LABOR AND DELIVERY				
Delivery Room	ES	B	AA	
Labor Room	W	J	C	
Nurse Station	E	A	AA/C	
Prep Room	W	J	C	
Recovery Room	W	J	C	
Resuscitation Room	WS	B	AA	
Stress Test	W	J	C	
MEDICAL/SURGICAL/ORTHOPEDIC NURSING UNIT				
Bedrooms	D	J	C	
Nurses Station	E	A	AA/C	
NURSERY				
Continuing Care	W	I	H	

TABLE 11-4

FUNCTIONAL AREA TELEPHONE REQUIREMENTS				
Area	Instrument Type	Features	Class	Notes
Nursery				
Full Term Nursery	W	I	H	
Intensive Care Nursery	W	B	AA	
Intermediate Care Nursery	W	I	H	
Observation Nursery Nurses Station	W	I	H	
Intensive Care	E	G	A/C	
Nurses Station, Intensive Care	E	A	AA	
PEDIATRIC NURSING UNIT				
Bedrooms	D	J	C	
Playroom	W	H	H	
Interview Room	D	C	A	
Sub Nurses Station	E	A	A/C	
PHYCHIATRIC/DRUG & ALCOHOL REHAVILITATION NURSING UNIT				
Bedrooms	D	J	C	
Group Therapy	W	J	H	
Occupational Therapy	W	H	H	
Office, Psychiatrist, Psychologist, Social Worker	D	C	A	
SURGICAL SUITE/RECOVERY ROOM				
Anesthetic/ Anesthesiologist Office	D	C	A	
Chief, Anesthesiology	E	F	AA/C	
Secretary Anesthesiology	E	F	AA/C	
Surgical Suite Control Desk	E	B	AA/C	
Clean Workroom	W	H	H	
Dictation Room	D	H	H	
Frozen Section Lab	W	H	H	
Nurses Station, Recovery	E	A	AA/C	
Operating Room (OR)	ES	B	AA	8
OR Work Core	W	E	A	
Supervisor, OR	D	C	A	
TYPICAL NURSING UNIT				
Clinical Nurse Supervisor	D	C	AA	2
Doctor's Office	D	C	A	

TABLE 11-4

FUNCTIONAL AREA TELEPHONE REQUIREMENTS				
Area	Instrument Type	Features	Class	Notes
Chief Nurse	D	A	A	
Mediprep	W	L	H	
Nourishment Station/ Pantry	W	L	H	
Nurses Workroom/Charting	D	A	C	
Physician's Workroom	D	C	A	
Satellite Pharmacy	W	I	H	
Supply Technician Office	D	L	H	
Treatment Room	W	H	H	
NCOIC Office	D	C	A	
Secretary	D	I	H	
MULTI-DEPARTMENTAL AREAS				
BUILDING AREAS				
Loading Dock	WP	L	H	
Energy Plant	W	L	C	
Mechanical Room	W	L	C	
Electrical Room	W	L	C	
Elevator	W	L	H	7
EMCS Room	D	L	C	
Telephone Switch Room	W	L	H	
GENERAL ADMINISTRATIVE				
Chief	ES	F	AA/A	1
Secretary	E	F	AA/A	1
NCOIC	E	F	A/C	2
Admin Office Clerical (Multi)	E	K	A/C	3
Admin Office Clerical	D	K	C	
Clerk Typist	D	L	H	
Clerical Records	D	L	H	
Reception	E	G	A/C	
GENERAL MULTI-DEPARTMENTAL				
Waiting	W	L	H	
Conference	ES	D	AA	
Lounge	D	L	C	
Sleep Rooms	D	C	A	
Nurses Office	D	K	H	
Technician	D	L	H	
Staff Officer	D	K	C	

Table 11-4 Notes:

1. The Commander, Department Chiefs and Secretary will always share the same lines and class of service.

2. When this office shares a line with a secretary or key associate, both lines indicated will be provided.

3. When this office has several subscribers stations (desks), both lines indicated will be provided.

4. Full operators console features and trunk access links will be provided.

5. This office must obtain telephone service from the local telephone company.

6. The type of instruments furnished will depend on the equipment and furnishings provided. They will be served by commercial lines.

7. Provide telephone outlet only, telephone sets will not be furnished.

8. Incoming calls will ring at the control desk. A visual indicator (flashing light) will be provided at a conspicuous location to signal an incoming call.
9. Attendant consoles will be provided for appointment clerks

TABLE 11-5

EXAMPLE TELEPHONE STATION REQUIREMENMT MATRIX							
Room Number	Area	Intra -Dept 1Intercom	No. and type of Outlets	No. & Type of Instruments	Features	No Lines & Class of Service	Note
SURGICAL SUITE							
3C 19	Control		2 D	2E	B	1-AA 1-C	
3C 19	Admin Personnel		2 D	1D	I	1-H 1-H	
3C 22	Supervisor	A	1 D	1E	F	1-AA	2
3C 21	NCOIC	A	1 D	1E	F	1-C	2
3C 05	Administration		1 D	1D	K	1-H	
3C 06	Dictation		2 D	1D 1D	D D	1-H 1-H	
3C 03	Lounge		1 D	1D	L	1-C	
PHYSICAL THERAPY							
2C 24	P. T. Supervisor		1 D	1D	F	1-A	
2D 32	NCOIC		1 D	1D	K	1-C	
2D 02	Hydrotherapy		1 W	1W	L	1-H	
2C 09	Exercise/Rehab Area		1 W	1W	L	1-H	
2D 25	Lounge		1 W	1W	L	1-c	
PERSONNEL							
2K 22	Chief Personnel	B	1 D	1ES	F	1-AA	2
2K 23	Secretary	B	1 D	1E	F	2-C	2
2K 21	NCOIC	B	1 D	1E	F		2
2K 20	Military Pers Workroom		4 D	2D	L	2-H	2
2K 19	Career Counselor		1 D	1D	K	1-C	
2K 18	Medical Hold Admin		1 D	1D	F	1-AA	
PATIENT ADMINISTRATION							
2K 06	Chief, PAD	C	1 D	1E	F	1-AA	2
2K 07	Secretary	C	1 D	1E	F	2-C	2
2K 05	NCOIC	C	1`D	1E	F		2
2K 01	Health Benefits Advisor		1 D	1D	K	1-AA	

TABLE 11-5 (continued)

EXAMPLE TELEPHONE STATION REQUIREMENMT SCHEDULE							
Room Number	Area	Intra -Dept 1Intercom	No. and type of Outlets	No. & Type of Instruments	Features	No Lines & Class of Service	Note
PATIENT ADMINISTRATION DIVISION (continued)							
2K 10	Central Dictation Supv		1 D	1D	K	1-C	
2K 11	Central Dictation Staff		6 D	6D	I	6-H	
2K 12	Medical Claims		3 D	3E	K	3-K	2
2K 14	Medical Records & Reports		4 D	4E	I	2-A	2
2K 16	Files, Active & Inactive		1 D	1D	L	1-H	
2K 04	Medical Boards		1 D	1D	K	1-AA	

NOTE:
1 Offices with same alpha intercom designator are on the same intra-department network.

2 These consecutive group stations will share all of the lines shown for each.

TABLE 11-6

PUBLIC ADDRESS AND PROGRAM DISTRIBUTION ZONES						
Area	Zone*	Page Only	Page & Music	Music Only	Location of Music Vol.Ctrl**	Microphone Location
Interdepartmental Corridor	All-Call		X		Head end	Central commo rm
NURSING UNITS SURGERY, OBSTETRICS:						
Corridor	All-Call	X			Head end	Central commo rm
Dayroom				X	Nurses Station	Not Applicable
Family Wait				X	Nurses Station	Not Applicable
Staff Lounge				X	Lounge	Not Applicable
Operating & delivery rooms				X	Each room	Not Applicable
Nursery	All-Call		X		Each room	Central commo rm
Snack bar, Vending area, Px, Barber shop	All-Call		X		Head end	Central commo rm
OUTPATIENT CLINICS (MEDICAL & DENTAL):						
Patient waiting, Toilets, and Corridors	Local-patient		X		Reception	Reception
Staff Corridors	Local-staff		X		Reception	Reception
Staff lounge	Local-staff		X		Lounge	Reception
Treatment room				X	Each tretmt rm	Not applicable
Dental treatment Rooms & areas				X	Each room or area	Not applicable
OCCUPATIONAL AND PHYSICAL THERAPY:						
Patient waiting & Toilets	Local-patient		X		Reception	Reception
Corridor	Local-staff		X		Reception	Reception
Hydrotherapy				X	Each room	Not applicable
Activities of daily Living				X	Suite	Not applicable
Exercise & rehab				X	Each room	Not applicable
Treatment cubicles				X	Each room	Not applicable
Staff lounge	Local-staff		X		Lounge	Reception
RADIOLOGY, RADIATION THERAPY, NUCLEAR MEDICINE						
Patient waiting,	Local-		X		Reception	Reception

TABLE 11-6

PUBLIC ADDRESS AND PROGRAM DISTRIBUTION ZONES						
Area	Zone*	Page Only	Page & Music	Music Only	Location of Music Vol.Ctrl**	Microphone Location
Corridors, toilet	patient					
(Mulltioccupancy) Diagnostic & therapy rooms				X	Each room	Not Applicable
Staff Corridors	Local-staff		X		Reception	Reception
Staff Lounge	Local-staff		X		Lounge	Reception
PATHOLOGY:						
Patient waiting and toilets	Local-patient		X		Reception	Reception
Blood drawing				X	Each room	Not Applicable
Laboratories except blood bank	Local-staff		X		Each room	Reception
Blood bank			X		Each room	Not Applicable
Corridors	Local-staff		X		Reception	Reception
Staff lounge	Local-staff		X		Lounge	Reception
FOOD SERVICE:						
Dining room	Local		X		Dept. Secretary	Dept. Secretary
Kitchen	Local		X		Dept. Secretary	Dept. Secretary
Staff lounge	Local		X		Lounge	Dept. Secretary
Corridors	Local		X		Dept. Secretary	Dept. Secretary
LOGISTICS:						
Warehouse	Local		X		Each area	Dept. Secretary
CP&D	Local		X		Each area	Dept. Secretary
Staff lounge	Local		X		Lounge	Dept. Secretary
Corridor	Local		X		Dept. Secretary	Dept. Secretary
ADMINISTRATIVE DEPARTMENTS:						
Corridors	All call		X		Local amplifier	Not applicable
CENTRAL MATERIAL SERVICES:						
Work areas	Local		X		Each room	Sec or NCOIC office

TABLE 11-6

PUBLIC ADDRESS AND PROGRAM DISTRIBUTION ZONES						
Area	Zone*	Page Only	Page & Music	Music Only	Location of Music Vol.Ctrl**	Microphone Location
Corridors	Local		X		Sec or NCOIC office	Sec or NCOIC office
Staff lounge	Local		X		Each room	Sec or NCOIC office

The above table is provided for guidance only the actual configuration of the PA system will be coordinated with the using service.

** Volume control for music only. All page only and page & music speakers with a local volume control will have a bypass relay for paging.

*Areas indicated for all call and local staff zones will also be included in wide area zones in the facility.

SECTION 12: ACCESSIBILITY PROVISIONS FOR THE DISABLED

12.1 General. This section provides design guidance on the application of accessibility requirements. Facilities are required to be accessible to disabled persons and shall be designed and constructed or retrofitted in accordance with the Uniform Federal Accessibility Standards (UFAS) (reference 12a). All facilities shall also be designed and constructed or retrofitted in accordance with the Americans with Disabilities Act Accessibility Guidelines (ADAAG) (reference 12b) whenever the ADAAG provides equal or greater accessibility requirements than the UFAS. In general, all facilities worldwide which are open to the public, or to limited segments of the public, or which may be visited by the public in the conduct of normal business, shall be accessible to disabled persons.

12.2 Military Exclusions. Facilities which are intended for the use of, or occupancy by, or staffed by only able-bodied military personnel need not be designed to be accessible by disabled persons; however, accessibility is recommended. The term "able-bodied military personnel" is defined as all active duty military personnel. Temporary facilities, such as troop aide stations and fleet hospital mobilization units used during military conflicts, need not be accessible.

12.3 Overseas Facilities. DoD-funded facilities constructed overseas will be accessible. Facilities for which the United States contributes a portion of the construction cost but does not control design criteria (such as NATO-funded facilities) need not be accessible. Facilities being constructed by or for use by the United States under the laws, codes, rules, and regulations of another country need not be accessible. Facilities being leased by the United States in other countries should be accessible.

12.4 TMA/DMFO Compliance Requirement.

12.4.1 TMA/DMFO policy is that all spaces serving patients, staff, and visitors shall be designed to be accessible to the disabled. TMA/DMFO programs adequate net area to design all patient dressing rooms, patient bedrooms, and patient bedroom toilets as accessible spaces even though UFAS/ADAAG requires only 10 percent of these spaces to be accessible.

12.4.2 Compliance with criteria is the responsibility of the designer; certification of compliance is the responsibility of the design agent. Include a completed checklist with the S-2 Schematic Design Submission and the S-4 Final Concept Design submittal. The checklists must be accompanied by sketch layouts showing the total access-egress system on the site and within the building. Include final layouts as part of final design.

12.5 Stairways.

12.5.1 Stairway Width. The designer will review the UFAS, ADAAG, and NFPA criteria to determine the minimum clear width between handrails for each stairway adjacent to an area of rescue assistance.

12.5.1.1 For high-rise wings or building elements normally served by elevators, and in which stairways are provided primarily for emergency egress, NFPA 101 criteria will govern.

12.5.1.2 For multistory building elements remote from elevators, or wherever the building layout and proposed functional use make it obvious

that stairways will be routinely used for vertical access, ADAAG will govern.

12.5.1.2 Stairway Rise. The requirements in NFPA 101 shall govern.

12.6 Medical Device Controls. Controls for medical gases, Operating Room lights, sterilizers and similar medical equipment may be located as recommended by the equipment manufacturer(s). Compliance with UFAS reach ranges is not required for this equipment.

12.7 Visual Alarms. Provide visual alarms in common use spaces and public use spaces as defined by and in accordance with the common use and public use criteria contained in the ADAAG.

12.7.1 The design agent is responsible for interpretation of ADAAG visual alarm location.

12.7.2 Visual alarms are not required in areas used only by employees as work areas. These areas are defined as individual offices and individual work stations), mechanical, electrical and telephone closets, janitor’s closets, and similar unoccupied spaces that are not common use areas nor assigned work areas. This may include other staff-only spaces within a facility.

12.7.3 Irregular strobe action can be deadly to individuals susceptible to epileptic seizures. Install visual alarms in accordance with NFPA 72, giving consideration to synchronization of visual alarm flash rates.

12.8 Interpretations and Waivers.

12.8.1 Waiver Authority. The Architectural Transportation Barriers Act permits the modification or waiver of the UFAS and the ADAAG when appropriate cause can be shown that a modification or waiver is clearly necessary. Waivers will be granted only in extraordinary circumstances on a case-by-case basis. Requests for modifications or waivers should be sent to the military service’s designated Design Agent for review. The Design Agent will forward his recommendation to TMA/DMFO for coordination of final decision by the Deputy Assistant Secretary of Defense (Civilian Personnel Policy).

12.8.2 Interpretations. The Architectural and Transportation Barriers Compliance Board (ATBCB) will provide technical assistance and interpretations of the UFAS and the ADAAG directly to the Design Agents. A copy of all interpretations and waivers obtained by the Design Agents from ATBCB shall be provided to the TMA/DMFO for incorporation in the next update of this Handbook. The ATBCB has provided written interpretations to UFAS on questions posed to them. These interpretations are applicable to all TMA/DMFO projects and have been included in Appendix D.

12.8.3 Waivers. Waivers have been granted by ASD(FM&P) and are included in Appendix D for further guidance on projects where the same conditions exist.

12.9 As-built Drawings. As-built drawings provided at the completion of the project will include information on features for the disabled. Applicable drawings must be maintained in the project file along with copies of the certified checklists.

REFERENCES

12a. FED-STD-795, "Uniform Federal Accessibility Standards" (UFAS), latest edition.

12b. Americans with Disabilities Act Accessibility Guidelines (ADAAG), latest edition.

SECTION 13: FIRE PROTECTION

13.1 General. This section provides fire protection engineering policy and design guidance for all medical facilities including hospitals, medical centers, composite medical facilities, occupational health clinics, free-standing outpatient health and dental clinics, flight medicine clinics, and other facilities for inpatient, emergency and ambulatory care. This section also provides fire protection engineering policy and design guidance for medical support facilities such as, blood storage and medical warehouses, medical laboratories and medical research laboratories, and veterinary care facilities. This section does not apply to contingency facilities. The level of protection afforded these facilities is minimum, austere, but adequate, given the least stringent requirement, which safely protects the contents of the contingency facility. (Refer to Section 1 for description of contingency facility.)

13.2 Criteria.

13.2.1 Life Safety and Fire Protection Concepts. The life safety concept and the fire protection concept shall be in accordance with NFPA 101 (reference 13a).

13.2.2 Codes and Standards. Except as modified herein, designs for facilities shall comply with the latest edition of MIL-HDBK-1008 (reference 13b), the standards contained in the current National Fire Codes published by the National Fire Protection Association (NFPA), the Uniform Building Code published by the International Conference of Building Officials, and the Joint Commission on Accreditation of Health Care Organizations (JCAHO) Manual (reference 13c) and National Institute of Standards and Technology (NIST) publications.

13.2.3 Fire Safety Evaluation System (FSES). NFPA 101A (reference 13d) may be used to assess existing facilities and for design concept development of Life Safety Code upgrade projects at existing facilities. NFPA 101A (reference 13d) may be considered for semi-permanent and contingency facilities if approved by the appropriate Design Agent and TMA/DMFO. NFPA 101A will not be used in lieu of prescriptive code criteria for the design of new permanent facilities.

13.2.4 Criteria Deviation. Where valid need exists and an alternate solution involving equivalent concepts and sound fire protection engineering are available, criteria deviation may be accepted after approval by the Authority Having Jurisdiction (AHJ) as identified at MIL-HDBK-1008 in conjunction with TMA/DMFO. Where deviation impacts compliance with JCAHO standards, coordination with and approval of Joint Commission Standards Group must be obtained prior to implementation.

13.3 Building Construction. Building construction shall be as specified in MIL-HDBK-1008 (reference 13b).

13.3.1 General Requirements. Medical facilities shall be noncombustible construction in which structural framing, walls, partitions and major components are wholly of noncombustible materials or assemblies. Minor components may be combustible material when not inconsistent with the codes and standards referenced above.

13.3.1.1 Type of Construction. Type of Construction shall comply with the following minimum requirements:

a) Medical centers, hospitals, composite medical facilities, and ambulatory health care facilities.

1) Four or more stories – Type I
2) Two or three stories – Type II-Fire Resistive
3) Single story – Type II-One Hour

b) Outpatient health and dental clinics, laboratories, research facilities and veterinary care facilities.

1) Three stories or more – Type II-Fire Resistive
2) One or two stories – Type II-N

Exception No. 1: Medical facilities designed and constructed in accordance with the requirements of the Integrated Building System (IBS), with a walk-on platform which provides access to the distribution zone (interstitial space), shall meet the criteria of NFPA 101 and NFPA 220.

Exception No. 2: Medical facilities classified as Occupancy Group B may consist of Types III, IV, or V construction if the total floor area does not exceed 8000 square feet. Allowable area increases are not permitted.

13.3.2 Building Height/Allowable Floor Area. Building height and allowable floor area limitations shall be in accordance with MIL-HDBK-1008 (reference 13b).

Exception: Medical facilities designed and constructed in accordance with the requirements of the Integrated Building System shall meet the fire and smoke compartmentation requirements and height limitations of NFPA 101.

13.3.3 Existing Facilities. Existing facilities shall be evaluated by a qualified fire protection engineer as defined by MIL-HDBK-1008 in order to determine the level of fire/life safety that is afforded the occupants.

13.3.3.1 Alterations and Renovations. To the extent possible, alteration, renovation, modernization and rehabilitation work of existing facilities shall comply with the requirements for NEW construction in accordance with MIL-HDBK-1008 (reference 13b). Additions shall be separated by 2-hour fire resistive construction from any existing structure that is not in compliance with current codes and standards. No additions, alteration or modernization project shall lessen the fire/life safety of the existing building.

13.3.3.2 Life Safety Upgrade and Fire Protection Assessment. To remain unchanged, existing facilities shall comply with the requirements for EXISTING construction requirements of NFPA 101 (reference 13a). It is intended that facilities, not in compliance with the EXISTING construction requirements of NFPA 101, be upgraded to meet the NFPA 101 requirements for NEW construction. However, if cost to upgrade to NEW construction criteria is determined prohibitive, DoD authorization must be obtained and coordinated for upgrade to EXISTING construction requirements based upon submission and approval of a fire and life safety assessment, and an *economic analysis.
In any case, the minimum level of fire safety for upgrade of existing facilities shall comply with EXISTING construction requirements of NFPA 101 (reference 13a). A Life Safety Assessment (LSA) shall be performed in coordination with the JCAHO Statement of Conditions.

*NOTE: The economic analysis shall include comparative analysis of at least three different life safety assessment solutions for NFPA 101 compliance in accordance with JCAHO Standards. Economic Analysis shall include cost estimates supporting the following:

- complete prescriptive compliance with NEW construction criteria,
- complete prescriptive compliance with EXISTING construction criteria, and

- compliance with other equivalent alternative life safety solutions.

a) Assessment Process. The process of determining compliance with NFPA 101 (reference 13a) may be facilitated by the use of JCAHO s (reference 13c) "Statement of Conditions" document. Part 3 of the document is the "Life Safety Assessment (LSA)" section, which consists of a check list form designed to assess compliance with the Life Safety Code. The document provides a systematic method of evaluating compliance, and each check list line item addresses a particular fire/life safety feature and includes the applicable reference paragraph or section of NFPA 101 (reference 13a).

b) Compliance Equivalency. Facilities determined not to comply with NFPA 101 (reference 13a) for existing occupancies may be reevaluated utilizing NFPA 101A (reference 13d). The Fire Safety Evaluation System (FSES) methodology may be used to determine if existing conditions and systems are equivalent to the Life Safety Code requirements.

c) Compliance. Facilities and/or facility feature(s) determined not to comply with NFPA 101 ((reference 13a), and determined not to be equivalent to NFPA 101 (reference 13a) by means of NFPA 101A (reference 13d), shall be corrected. Corrections may be facilitated by the use of the JCAHO’s Statement of Conditions, Part 4, “Plan for Improvement (PFI)” The PFI should be maintained and updated on a regular basis or as recommended by the JCAHO.

13.3.4 Construction Operations. Fire protection and life safety provisions shall be provided during construction as specified by MIL- HDBK-1008, the National Fire Protection Association Codes and Standards, and the Interim Life Safety Measures (ILSM) of the JCAHO Manual (reference 13c). When a facility is to be occupied during a renovation, alteration or upgrade, consideration shall be given to the potential impact on life safety in occupied areas. Construction and demolition phasing shall be planned so that the integrity of fire and smoke partitions, exits, stairways, and vertical shafts, which are contiguous with inpatient areas, are maintained to the highest level possible. Appropriate safety measures in accordance with NFPA 101 (reference 13a) and NFPA 241 (reference 13q) will be incorporated into temporary structures.

13.4 Occupancy Classification. Occupancy classification of medical facilities shall be defined by NFPA 101 (reference 13a). Facilities or portions of facilities, which are not required to be health care occupancy, may be classified as other occupancies provided that the requirements of NFPA 101 are satisfied.

13.5 Means of Egress. Facilities shall meet the requirements of the Life Safety Code, NFPA 101 (reference 13a).

13.5.1 Horizontal Exits. Floors with inpatient sleeping rooms shall utilize horizontal exits to the fullest extent possible to maximize "defend-in-place" evacuation.

13.5.2 Areas of Refuge. Total evacuation of the occupants to the outside of the building is often impractical for inpatients located on upper floors. Therefore, areas of refuge shall be implemented through the use of smoke compartmentation when a rapid and complete evacuation is not feasible.

13.6 Interior Finishes. Interior wall, ceiling and floor finishes, and movable partitions shall conform to MIL-HDBK-1008 (reference 13b).

13.6.1 Carpeting. Carpeting and other textile wall coverings shall not be utilized on walls in smoke compartments with sleeping areas and shall not be utilized in other areas except as allowed by MIL-HDBK-1008 (reference 13b).

13.7 Fire Detection and Alarm Systems (FDAS). Fire alarm systems shall be provided for all medical facilities in accordance with MIL-HDBK-1008 (reference 13b), and NFPA 101 (reference 13a), NFPA 99 (reference 13e), and NFPA 90A (reference 13f). These systems shall be installed in accordance with NFPA 72 (reference 13g) and NFPA 70 (reference 13n).

NOTE: Combining FDAS with other building systems such as building automation, energy management, security, etc, is not permitted. Down-time caused by any of these non-life safety systems will also take the FDAS out of service which is unacceptable.

13.7.1 Clinics. Free standing clinics shall be provided with a supervised, manually operated, non-coded general fire alarm system. Exception: Large clinics over 50,000 square feet may be provided with a coded system.

13.7.2 Fire Alarm System Zoning. Each smoke compartment shall be zoned (annunciated at the FDAS panel and at any remote annunciator panels) separately. Maximum area of each smoke compartment shall be as required by NFPA 101 (reference 13a).

13.7.3 Alarm Indicators and Control Panels. Locate the main control panel at the emergency area reception desk or at a 24-hour supervised location and coordinated with the facility. Large medical facilities may require additional locator panels at designated nursing stations and major lobbies. The fire detection system panel shall be provided with audible signals for power failure, open circuit, ground, smoke detector failure, sprinkler valve water-flow detection, and fire pumps.

13.7.4 Automatic Smoke Detection. Smoke detection shall be provided where required in accordance with NFPA 101 (reference 13a), NFPA 101A (reference 13d), NFPA 90A (reference 13f), NFPA 72 (reference 13g), ASTM A17.1 (reference 13r) and MIL-HDBK-1008 (reference 13b). Where many smoke detectors are required to be installed, analog addressable systems are encouraged. Spot type, ceiling mounted smoke detectors shall be photoelectric type.

NOTE: Smoke detection systems require significant testing and maintenance. It is critical that required detectors are properly installed and maintained. Providing detectors in locations that are not required increases the already high maintenance costs of alarm systems and strains the maintenance program for critical detection systems. If a facility or design warrants protection and criteria do not require detection, protection should be accomplished by sprinkler protection, preferably wet pipe sprinklers which provide superior protection with very little maintenance.

13.7.5 Manual Fire Alarm Boxes. Manual alarm initiation stations shall be located within 5 feet of each stairway exit door, exit doors to the outside, horizontal exits and normal means of egress, and shall comply with the requirements of NFPA 72 (reference 13g) and NFPA 101 (reference 13a).

13.7.6 Occupant Notification. Where "defend-in-place" evacuation is provided, alarm signals shall be coded. Audible notification device shall not be located within surgical operating rooms. Provide subdued audible indicating appliances in critical care areas.

13.7.6.1 Visual Alarms. Visual alarm notification is required for all medical facilities in accordance with NFPA 101. Visual alarms shall be in view of all nurses stations, exits, and at locations such as mechanical rooms where the operating noise levels (sound pressure) exceed the level of the audible alarm. For facilities that have a fire safety evacuation plan, which

includes occupant notification by trained staff personnel, visible notification appliances are required only in public accessible areas (including corridors and hallways, lounges and lobbies, cafeterias, auditoriums, large conference rooms and public restrooms). For those facilities that do not have an evacuation plan, visible notification appliances shall be provided in all public accessible and patient accessible areas including exam and treatment rooms. Visual alarms are not required in areas that are used only by employees as work areas (individual offices, work stations) and staff-only spaces. Alterations for future accessibility must be considered when facility wiring is planned to facilitate a later connection to the building FDAS.

NOTE: Previous guidance was stipulated based upon occupancy classification. This criteria is applicable to all occupancies in which occupants are provided medical treatment.

13.7.7 Fire Department Notification. Systems shall be connected to the base fire department, or when not available, to a suitable location where responsible personnel are continuously on duty.

13.7.8 Electrical Power Supply. FDAS primary electrical power supply shall be provided from the life safety branch of the essential electrical system in facilities equipped with generator backup. Secondary electrical power shall be by means of battery backup.

13.8 Smoke Control Systems. Smoke control systems shall conform to NFPA 92A (reference 13h), NFPA 92B (reference 13i) and the appropriate sections of NFPA 101 (reference 13a). When a smoke detection system is used to initiate smoke control, it shall conform to the recommendations of NFPA 72 (reference 13g).

13.9 Automatic Sprinkler Protection. All facilities shall be protected throughout by an approved automatic sprinkler system provided in accordance with NFPA 13 (reference 13j) and MIL-HDBK-1008 (reference 13b). Sprinkler systems shall be installed throughout all medical facility spaces and rooms, including elevator machine rooms, walk-in freezers and cold rooms, computer rooms, telephone switch rooms, radiology and MRI suites, loading docks, electrical rooms, audio-metric booths (except where constructed and listed with a one hour fire rating), vaults, paint spray booths, dry type lint collectors, dust collectors, and generator rooms. Sprinklers are not required where specifically exempted by NFPA 13, and in:

Exception No 1: Stand-alone, detached facilities, classified as business occupancies, less than three stories in height and of Type I (FR), Type II (FR) or Type II (One Hr) construction.

Exception No 2: Distribution zone and connection zone (space above suspended ceiling) of facilities designed and constructed in accordance with the requirements of the Integrated Building System. (Refer to Chapter 19 for IBS configuration criteria.) Distribution Zone spaces which require sprinklers, include electrical and communication closets, etc., and automatic box conveyor (ABC) rails and electric track vehicle systems (ETVS) tracks located within interstitial space over which a single line of sprinklers with no greater than 6 ft. spacing shall be installed.

13.9.1 Elevators. Install sprinklers in elevator pits and machine rooms only where required by NFPA 13. Sprinklers are not required at the top of elevator hoistways. Install standard sprinklers with intermediate temperature rating of 200°F or higher in elevator pits and machine rooms. The sprinkler system shall be interfaced with elevator lobby smoke detectors for

elevator recall, and with heat detector(s) and sprinklers for elevator electrical power shutdown requirements (shunt-trips).

13.9.2 Sprinkler System Zoning. Sprinkler systems shall be zoned by floor (at a minimum) for multi-story facilities. Zoning and system controls shall also correspond to smoke compartments, where provided. All sprinklers in a smoke compartment shall be piped as one system with one control valve and waterflow switch. Zoning shall also correspond to the fire alarm zoning.

13.9.3 Sprinkler System Design. New sprinkler systems that provide coverage of 1,500 square feet or greater, shall be designed by utilizing hydraulic calculation methodology, in accordance with NFPA 13 (reference 13j). The NFPA 13 special design approach shall not be used in health care facilities. Sprinkler design densities and corresponding remote design areas shall be in accordance with MIL-HDBK-1008 and as follows:

a) Smoke compartments with sleeping and treatment areas: Light Hazard.
b) Dining areas and kitchens: Ordinary Hazard Group 1.
c) Storage rooms, record storage, laundry rooms, mechanical rooms and similar rooms greater than 100 sq. ft: Ordinary Hazard Group 1.
d) Shops other than woodworking shops: Ordinary Hazard Group 1.
e) Woodworking shops: Ordinary Hazard Group 2.
f) Boiler rooms: Ordinary Hazard Group 2.
g) High hazard spaces: Ordinary Hazard Group 2.
h) Bulk supply storage (Maximum height of 12 ft): Extra Hazard Group 1.
i) Rooms containing movable/mobile shelving/high density storage: Ordinary Hazard Group 2.
j) Laboratories with installations for use of flammable gas: Ordinary Hazard Group 2.

13.9.4 Kitchen and Food Service Equipment. Extinguishing systems shall be provided in food preparation areas. Self-cleaning water-wash ventilators with water-spray fire protection systems shall be used to protect cooking surfaces, ducts, grease removal devices, and range hoods in accordance with NFPA 96 (reference 13k).

NOTE: Water spray is permitted by NFPA 96 for protecting cooking surfaces and grease-laden exhaust ducts. Use of water reduces downtime of kitchen operations because of ease of cleanup.

13.10 Standpipes. Standpipe systems shall be provided in buildings 4 stories (40 ft in height) or greater, or in buildings where fire department access may be difficult, in accordance with MIL-HDBK-1008 (reference 13b) and NFPA 14 (reference 13s). Water supplies shall also be in accordance with MIL-HDBK-1008 (reference 13b).

13.11 Electronic Communications and Automatic Data Processing (ADP) Installations. Rooms and areas housing EPABX equipment or other electronic communications, large rooms containing ADP equipment, and electronic equipment providing control of critical medical equipment (i.e., MRI, CT Scanner) shall meet the requirements of NFPA 75 (reference 13l) and be protected in accordance with MIL-HDBK-1008 (reference 13b).

13.11.1 Automatic and Manual Controls. Controls to disconnect power to all electronic equipment and shut down the air conditioning system shall be provided.

13.11.2 Halon Fire Extinguishing Systems. Use of Halon fire extinguishing systems is prohibited.

13.12 Atriums/Malls. Atriums and medical malls shall meet the requirements of NFPA 101 (reference 13a) and shall be designed to comply with NFPA 92B (reference 13i).

13.13 Protection From Hazards. Protection from hazards shall be in accordance with MIL-HDBK-1008. Storage rooms shall be considered hazardous areas and comply with appropriate occupancy chapter requirements of NFPA 101.

13.13.1 Flammable and Combustible Liquid Storage. Flammable and combustible liquid storage must be in a fire resistance rated enclosure complying with NFPA 30.

13.13.2 Gas Storage. Flammable gas storage must be in a fire resistance rated enclosure complying with NFPA 99. Nonflammable medical gas storage must be in a fire resistance rated enclosure complying with NFPA 99.

13.13.2.1 Oxygen Storage. Oxygen storage rooms must be located at least 50 feet from flammable storage rooms.

13.14 Integrated Building Systems (IBS). For a functional description of the various elements of the Integrated Building System refer to Section 19.

13.14.1 Requirements. Fire safety requirements for facilities designed using the Integrated Building System (IBS) shall be in accordance with the same codes and standards applicable to any non-IBS facility. The following IBS criteria is based upon a special study titled Fire Performance of Interstitial Space Construction System (NBSIR 85-3158) (reference 13m), conducted by the National Institute of Standards and Technology (NIST). The IBS criteria herein is coordinated with the requirements of the referenced codes and standards to accommodate the nontraditional characteristics of the IBS approach. Where variations between this standard and other applicable codes and standards occur, the fire safety design requirements for IBS facilities indicated herein, shall govern.

Basic Concept. In IBS designs, as in traditional building configurations, smoke compartments are separated by fire-rated smoke barriers. The area of an IBS module, i.e. smoke compartment, can be no greater than 22,500 sq. ft. The IBS modular zones which require smoke barrier separation for smoke compartmentation are the occupied and connection zones. Neither, the distribution zone, nor the utility pod is required to be subdivided by smoke barriers. In addition to this section, refer to Section 19, Integrated Building System, for a description of the IBS configurations, modules and zones.

NOTE 1: The integration of IBS facility building modules with NFPA smoke compartmentation requirements is a basic fire protection/life safety principle of this non-traditional building concept. When applying NFPA 101, the modular configuration of the IBS is a significant benefit because compartmentation becomes a natural byproduct.

NOTE 2: Coordination of Systems. Supply services to any system module shall serve an area that corresponds to the smoke compartment, including electrical power, fire alarm zoning, automatic sprinkler zoning, and HVAC zoning. Supply services are defined as utilities, i.e., water supply, electrical power and medical gases that originate outside of the module, feeding utilities which are centrally located in the utility pod of each system module and then distributed to each functional zone via the distribution zone of each system module.

NOTE 3: Number of Stories. The walk-on platforms constituting the floor level of the distribution zones do not constitute separate stories. Each occupied zone and its corresponding floor is counted as an independent floor level.

13.14.2 Construction.

13.14.2.1 Floor-to-Floor Fire Separation. A 2 hour fire resistive separation is required between floors. The fire resistance rating runs in a horizontal plane along the utility pod floor, then vertically along the wall separating the utility pod from the occupied zone and connection zone. The fire resistance rating then continues along the walk-on platform to the outside wall. The walk-on platform of the distribution zone shall be designed in accordance with NBSIR 85-3158 (reference 13m). See Figure 13-1.

13.14.2.2 Occupied Zone.

a) The building modules of IBS facilities at the occupied zone shall be the designated smoke compartments separated from each other by 1 hour fire rated construction. These separations shall meet the smoke barrier requirements of NFPA 101 (reference 13a).

b) Walls, smoke barrier partitions, occupancy separations (not greater than 2 hour fire resistance) and horizontal exit walls shall terminate at the bottom of the walk-on platform. Occupancy separations (2 hour fire resistance and greater) of multi-story facilities shall not terminate at the walk-on platform, but pass continuously through the distribution zone and structural floor and terminate at the bottom of the occupied zone floor above.

13.14.2.3 Distribution Zone.

a) Dividing the distribution zone into smoke compartments with smoke barriers is not required.

b) Horizontal exit or smoke barrier walls, located in the occupied/connection zone need not be extended up into the Distribution Zone.

13.14.2.4 Utility Pods.

a) Utility Pods shall be separated from the distribution zones by 1 hour fire rated construction and from the occupied and connection zones by 2 hour fire resistive construction.

b) The structural members in the utility pod shall have a 2 hour fire resistive rating.

13.14.2.5 Structural Members.

a) Columns. All columns shall be provided with the required degrees of fire resistance within all zones.

b) Occupied Zone Floor. As part of the IBS floor/ceiling assembly, the occupied zone floor slab, except at the utility pod, is not required to have an independent fire resistance rating. However, all penetrations shall be firestopped.

c) Other Structural Members. Primary structural members (supporting more than one floor) located within the distribution zone, such as columns and girders and trusses, shall have a 2-hour fire resistive rating or be protected in accordance with the fire resistance requirements of the Uniform Building

Code (reference 13p). Secondary structural members (supporting only one floor) within the distribution zone are not required to be fireproofed. Lateral and seismic bracing within the distribution zone need not be fireproofed provided these members do not carry vertical loads (live or dead).

NOTE: A full-scale fire test of the IBS structural assembly was conducted by NIST (NIST publication NBSIR 85-3158) for the VA in 1985 and again for a specific DoD project in 1995. Results of the 1985 NIST test determined that ALL structural steel within the interstitial space (distribution zone) is adequately protected for 2-hours by the walk-on platform/interstitial space arrangement without any direct fireproofing to the structural steel within the interstitial space.

13.14.2.6 Openings. To prevent fire and smoke migration into the distribution zone, openings through the walk-on platform shall be protected as follows:

a) All penetrations (ducts, pipe, cables, conduit, etc.) shall be firestopped at the walk-on platform with approved material in accordance with NBSIR 85-3158 (reference 13m), or with an approved through-penetration protection system.

b) Shafts shall be enclosed in properly rated construction and tightly sealed for the full perimeter of the penetration at the walk-on platform in accordance with NBSIR 85-3158 (reference 13m), or with an approved through-penetration protection system.

13.14.2.7 Ducts and Dampers.

a) Fire dampers are not required where ducts penetrate the 1 hour fire rated partition between the utility pod and the distribution zone.

b) Fire dampers are required where ducts penetrate 2 hour fire resistive partitions between the utility pod and the occupied and connection zones.

c) Fire dampers are not required in ducts for openings in the walk-on platform less than or equal to 150,000 sq. mm (225 sq. in). This includes supply ducts from the distribution zone to the occupied zone, exhaust ducts, and return ducts from the occupied zone to the distribution zone.

d) The total cumulative open space created by unprotected duct penetrations in the walk-on platform above any single smoke compartment or room in the occupied zone shall not exceed 0.98 percent of the area of the respective smoke compartment or room.

NOTE: This limit is provided as a design control feature to prevent over-penetrating a given area of walk-on platform with undampered duct penetrations. The value of 0.98 percent is based upon the percentage used in the 1985 NIST test and has been coordinated with the JCAHO Standards group.

e) Flexible duct work (Class 1-UL Standard 181) is permitted in the distribution zone for connections less than 2.4 m (8 ft.) long and shall be no larger than 300 mm (12 in.) in diameter.

f) Smoke dampers are required in ducts in the distribution zone where a duct serves more than one smoke compartment. Where required, the smoke damper shall be located in the duct at the approximate location where the smoke barrier is located below in the occupied zone.

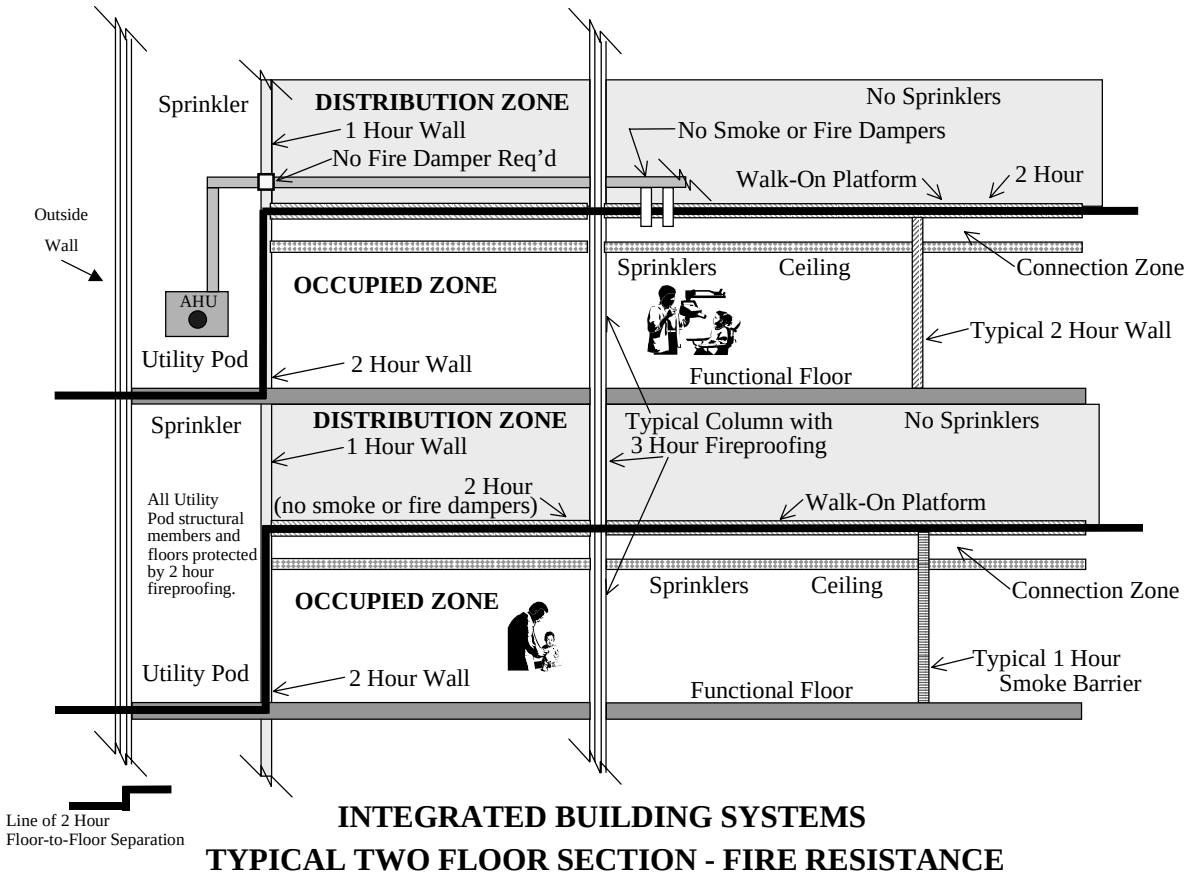

INTEGRATED BUILDING SYSTEMS
TYPICAL TWO FLOOR SECTION - FIRE RESISTANCE

FIGURE 13-1

13.14.3 Sprinkler Systems.

13.14.3.1 Approved automatic supervised sprinkler protection shall be provided throughout the occupied zone and in the utility pod. Sprinkler protection is not required in the distribution zone or the connection zone.

13.14.3.2 Fire alarm system supervision and annunciation of sprinkler system zones shall be coordinated with the compartmentation of each IBS module.

13.14.4 Standpipe Systems. Standpipes shall be provided in buildings when the top floor or top walk-on platform is greater than 10 m. (40 ft) above grade, or in buildings where fire department access is difficult. Standpipes shall be provided in accordance with NFPA 14 (reference 13s).

13.14.4.1 Each enclosed exit stair shall include an automatic Class-I standpipe. All hose connections shall be provided with 2½-inch hose valves with 2½-inch by 1½-inch reducing caps.

13.14.4.2 The sprinkler riser(s) for a module shall be combined with the standpipe riser(s) within the module. Hose outlets will be provided on the landings at the occupied zone at the entrances to the distribution zone located in the utility pod, and on each side of horizontal exit barriers.

13.14.5 Smoke Control and Management. Each facility shall be evaluated on an individual basis for the requirements for a smoke management system. Typically, the means to manage the flow of heat, smoke and other products of

combustion are inherent to IBS facilities. Building systems shall be coordinated and interfaced in accordance with NFPA 92A and NFPA 92B (references 13h and 13i) to achieve smoke control and management. "Smoke removal" is not considered an "engineered smoke control system."

13.14.5.1 Zoned smoke control shall be provided for IBS facilities provided with quick response sprinklers throughout smoke compartments with patient sleeping rooms and which are greater than two stories. Where inpatients can be evacuated directly outside without requiring assistance to traverse a vertical exit component, smoke control is not required. Performance criteria for smoke management shall be established for each facility.

13.14.5.2 Smoke management shall be provided for atriums, malls and other large volume spaces.

13.14.5.3 A means for purging the distribution zone of smoke and other products of combustion for post fire operations shall be provided. Typically a manual smoke purge system shall be provided for each individual system module with manual remote control available from the fire emergency control center.

13.14.5.4 Every effort shall be made to design all HVAC systems to be contained within an individual module. Smoke management should be zoned and annunciated by IBS module.

13.14.6 Fire Detection and Alarm Systems. Each project shall be evaluated to determine the need for detection systems in special areas using NFPA 101 (reference 13a) and NFPA 72 (reference 13g) for guidance. All fire protection devices shall annunciate at the fire emergency control center. System initiating device signals shall be annunciated by category of signal (alarm, supervision, trouble), type of device and location (floor and module).

13.14.6.1 System supervision and alarm zoning shall be coordinated with the fire and smoke compartments, and IBS zones of each module.

13.14.7 Distribution Zone.

13.14.7.1 IBS Concept. The distribution zone is an unoccupied space and shall not be utilized for any storage.

13.14.7.2 Access Door. An access door from each required exit stairway shall be provided to the distribution zone. Access doors shall be locked and accessible only by key. Each access door shall bear the sign "Storage in This Area is Prohibited by Order of the Fire Marshall." A similar sign shall also be placed inside the space.

13.14.7.3 Means of Egress. The access door is the primary means of egress for distribution zone occupants and shall meet the exit and ease of operability requirements of NFPA 101 (reference 13a).

13.14.7.4 Fire Alarm Features. Fire alarm devices located in the distribution zone are part of the module fire alarm evacuation system.

a) A manual pull station shall be provided in the distribution zone at each access door. Zoning for annunciation of this device shall be coordinated with the exit enclosure serving the module occupied zone. The manual pull station shall have an independent alarm annunciation zone.

b) Alarm indicating devices shall be provided for occupant notification throughout the distribution zone. Upon any alarm initiating

signal within a module, the indicating devices within the distribution zone of that module shall activate.

c) Smoke detection is required at each elevator access landing in the distribution zone. The smoke detector(s) shall be connected to the elevator controls and provide elevator response per NFPA 101 (reference 13a).

13.14.7.5 Marking of Means of Egress.

a) Access aisles shall be delineated on the surface of the walk-on platform from the most remote point to the access door. Access aisles shall be painted yellow with direction arrows or cross-hatching indicating direction to the access door.

b) Exit signs shall be illuminated and located at each access door. Two signs shall be provided; one above the doorway and one adjacent to the doorway within 36 inches of the walk-on platform. Exit signs shall also be located along the access aisles. Exit signs shall be in accordance with the size and illumination requirements of NFPA 101, Section 5-10, "Marking of Means of Egress" (reference 13a).

13.14.7.6 Egress Lighting. Egress illumination shall be provided. The degree of illumination and location of lights shall be determined for each module.

13.14.7.7 Electrical Power. Exit signage and egress lighting shall be on life safety circuits and provided with standby or emergency power. Since the distribution zone space is normally unoccupied, key-operated light switches, located at each access doorway, shall activate normal lighting, egress illumination, and exit sign illumination within the module in accordance with NFPA 70 switch requirements for control of emergency lighting circuits. This shall minimize electrical usage and replacement of lamps in the distribution zone.

13.14.7.8 Cables and Conductors. All cables and conductors shall be run in metal cable trays in accordance with the requirements of NFPA 70 (reference 13n). The cables shall be segregated into separate compartments within each cable tray.

REFERENCES

13a. NFPA 101, "Safety to Life from Fire in Buildings and Structures" (Life Safety Code)

13b. MIL-HDBK-1008, "Fire Protection for Facilities Engineering, Design and Construction" (latest edition).

13c. Joint Commission on Accreditation of Healthcare Organizations (JCAHO) Manual.

13d. NFPA 101A, "Guide to Alternative Approaches to Life Safety" (Fire Safety Evaluation System (FSES))"

13e. NFPA 99, "Health Care Facilities"

13f. NFPA 90A, "Installation of Air Conditioning and Ventilation Systems"

13g. NFPA 72 "National Fire Alarm Code"

13h. NFPA 92A, "Smoke Control Systems"

13i NFPA 92B, "Smoke Management System in Malls, Atria, and Large Areas"

13j. NFPA 13, "Installation of Sprinkler Systems"

13k. NFPA 96, "Ventilation Control and Fire Protection of Commercial Cooking Equipment"

13l. NFPA 75, "Protection of Electronic, Computer/Data Processing Equipment"

13m. NBSIR 85-3158, "Fire Performance of Interstitial Space Construction Systems"

13n. NFPA 70, "National Electric Code"

13o. NFPA 220, "Types of Building Construction"

13p. ICBO (International Conference of Building Officials) Uniform Building Code (UBC)

13q. NFPA 241, "Safeguarding Construction, Alteration and Demolition Operations"

13r. ASME/ANSI A17.1, “Safety Code for Elevators, Dumbwaiters, Escalators, and Moving Walks”

13s. NFPA 14, "Standpipe, Private Hydrant and Hose Systems."

SECTION 14: PHYSICAL SECURITY

14.1 General. This section provides facility design guidance for physical security and crime prevention. Established installation security strategies should also be taken into consideration. The purpose of physical security is to make unauthorized access to assets so difficult that an intruder will hesitate to attempt a facility penetration or will, in the course of such efforts, be forced to take actions that will assist in detection or apprehension. Physical security design and construction considerations may include features discussed in Section 15: Force Protection. Please review this section.

14.2 Design Criteria. Guidance for physical security design is provided in MIL-HDBK-1013/1A, “Design Guidelines for Physical Security of Facilities" (reference 14a), OPNAVINST 5530.14C, "Navy Physical Security Manual" (reference 14b), and in using Military Department criteria.

14.3 Passive Security. Facilities should be sited and designed to maximize passive security. Passive security depends largely on staff awareness of the presence of unauthorized persons. This concept includes the use of security zoning within a facility. Specific using Military Department criteria shall be followed. The following are recommended considerations:

14.3.1 Access Control. Proper design permits staff to control specific areas of responsibility, thereby reducing or eliminating the opportunity for undesirable behavior within a designated area by restricting access to only those authorized personnel having legitimate reasons for access. Consideration should be given to vehicular and pedestrian access routes, parking layouts, landscaping, lighting, and location and design of department reception areas and other operational functions to assist in controlling access.

14.3.2 Proximity Placement. Planning and design should take into consideration collocating, if feasible, departments of similar sensitivity and access requirements along with the design of parking layouts, entrances, and personnel traffic patterns to maximize the effectiveness of an access control system.

14.3.3 Visibility. Locations of reception desks should afford unrestricted visibility of entrances, thereby establishing entry control points. Traffic patterns must bring traffic to these control points to ensure effective 24-hour staff control.

14.4 Physical Construction. Physical construction should be designed to prevent unauthorized access to high value assets, i.e., to resist break-in to security cages, pharmacies, vaults, storerooms, mail rooms, etc. Mail rooms should be located at the perimeters of facilities.

14.5 Electronic Security Systems.

14.5.1 Systems Considerations. Electronic security systems, including Intrusion Detection Systems (IDS), duress alarms, electronic access control systems and Closed Circuit Television (CCTV) systems, shall be provided for facilities when required by the using Military Department. Multiple electronic security systems may be integrated to provide an overall facility security system. A staff identification card system with multiple levels of access control may be provided. Package inspection devices may

also be considered for mail rooms. See Section 11: Communications Systems for information on electronic security systems.

14.5.2 Systems Design. Construction documents for electronic security systems shall identify sensor locations and include floor plans, schematics, riser diagrams, security equipment schedules and typical details. Floor plans shall locate all monitoring and control equipment. Security equipment schedules shall include room and door numbers, sensors, alarm control panels, switches and access control devices. Electronic security systems shall be provided with uninterruptible power sources, dedicated electrical service panels, interfaces with installation security systems, and local and remote alarms, as required by the using Military Department.

14.6 Keys and Locks. The master key and lock plan for a facility shall provide multiple levels of entry control. A master key system shall be provided for all areas with the following exceptions. Separate keying systems are required for pharmacies. Separate keying systems should also be considered for medical supply storage areas or facilities; food service facilities; exchange service facilities; mail rooms; mechanical, electrical and communications equipment rooms; and housekeeping and janitorial rooms.

14.7 External Security. External security protection should be provided primarily by proper illumination and by parking layouts that minimize staff walking distances to entrances. Where possible, parking areas should be located so that they can be viewed entirely from entry control points within a facility such as the emergency department or other primary entrances. Site landscaping adjacent to a facility should consider physical security concerns, i.e., possible concealment of intruders, etc. For those facilities that are not on installations or that are in remote locations on installations, fencing should be considered at the site perimeter. The entire perimeter should be well lighted with minimal use of shrubs and trees for possible concealment of intruders.

14.8 Levels of Security Protection. The essential requirement is to provide an appropriate level of security protection for personnel and property. The objective is to decrease the opportunity for security problems to develop. The following levels of security protection are defined according to operational mission:

14.8.1 Medical Facilities Excluding Hospitals. In addition to the preceding security considerations:

14.8.1.1 Intrusion Detection Systems (IDS). Exterior doors and operable windows shall be provided with IDS sensors with alarms monitored at the installation security station and at other locations if required by the using Military Department.

14.8.1.2 Other Considerations. Other basic security devices with local and remote alarms shall be included for narcotics lockers, precious metals safes, and medical supply storage areas or facilities.

14.8.2 Hospitals. In addition to the above, security shall be further enhanced by:

14.8.2.1 Traffic Patterns. Traffic patterns that can be controlled with a minimum of entry control points during nighttime hours in a facility staffed 24 hours a day. In hospitals where the emergency department entrance is the only staffed entrance during these hours, visitors should enter within direct control of the emergency department reception desk. Other entrances such as those for dental or other clinics shall be locked

after normal operating hours. IDS sensors and CCTV systems should be installed at these entrances.

14.8.2.2 Remote Locking. Remote, electrically operated locks that can be controlled from a central point such as the emergency department reception desk or a hospital command and control center. This system establishes the emergency department reception desk or the command and control center as the hospital Central Security Operations Point after daytime hours. Such locks must be released automatically, when fire and smoke alarms are activated, for doors required for emergency egress.

14.8.2.3 Intrusion Detection Systems (IDS). IDS planned and designed to meet the security requirements of the location and the using Military Department directives.

14.8.2.4 Closed Circuit Television (CCTV) Systems. CCTV systems for areas as specified by the using Military Department.

14.8.2.5 Card Access Systems. Card access systems for exterior doors and sensitive areas such as computer rooms, pharmacies, and other areas as specified by the using Military Department.

14.9 Special Considerations for Security Sensitive Areas/Rooms. Sensitive areas/rooms shall be designed to store valuable assets, i.e., funds, narcotics, dangerous drugs, and controlled substances/materials. The most cost-effective method of providing adequate security for these assets shall be selected.

14.9.1 Funds Storerooms. Design considerations shall include the possible use of roll-up shutters, special wall construction, special door construction and hardware, prevention of access from ceiling spaces, IDS and duress alarms, security glazing for service windows, nighttime security lighting and special key control. Security features will be determined by the using Military Department based on the dollar amount of funds to be stored.

14.9.2 Safes. Drugs classified as Schedule I or II controlled substances under the Controlled Substance Act of 1970 must be stored in safes or vaults. Drugs classified as Schedule III through V may also be stored in safes or vaults as deemed appropriate by the using Military Department. Safes or steel security containers, weighing less than 750 pounds, shall be bolted or cemented to floors or walls in such a way that they cannot be readily removed. Safes and steel security containers, if necessary due to the quantities and types of controlled substances/ materials to be stored, shall be equipped with IDS.

14.9.3 Vaults. Features to be considered for vault storage areas are outlined in MIL-HDBK-1013/1A (reference 14a) and using Military Department directives.

14.9.3.1 Vault Construction.

a) Walls, floors and ceilings of vaults must be constructed of at least eight inches of reinforced concrete, or other substantial masonry, reinforced vertically and horizontally with 15 millimeter (1/2-inch) steel rods tied together at 150 millimeters (6-inches) on center, or the structural equivalent to such reinforced walls, floors and ceilings.

b) Vault door and frame units must meet the following requirements for resisting unauthorized entry: 30 minutes against surreptitious entry, 10 minutes against forced entry, 20 work hours against

lock manipulation, and 20 work hours against radiological techniques. Vault doors must be equipped with contact switches.

c) Additionally, vaults must be equipped with one of the following: complete electrical lacing of walls, floors and ceilings; sensitive ultrasonic or infrared sensors within the vaults; sensitive sound accumulator systems; or such other systems designed to detect unauthorized entry as may be required by the using Military Department. Vault alarm systems shall transmit a signal directly to the Central Security Operations Point and/or the installation security station, i.e., a location that is staffed 24-hours a day.

14.9.3.2 Day Gates. Vaults that must remain open during normal operating hours shall be provided with self-closing and self-locking day gates complying with using Military Department requirements.

14.9.4 Pharmacies. Walls, floors and ceilings of pharmacies shall provide resistance to forced or surreptitious entry and, where necessary, shall be reinforced. Doors and windows shall be kept to a minimum and doors shall be keyed separately from the master key system. IDS sensors shall be installed at all doors and windows including windows opening to corridors. Walls surrounding pharmacies shall be constructed in accordance with MIL-HDBK-1013/1A (reference 14a). As a minimum, perimeter walls shall be full height from floor slab to structure above.

14.9.4.1 Doors. Doors shall be provided with security hinges and shall be locked with security locksets. Doors may be lightweight, covered with 9 to 12 gauge steel security mesh or 16 gauge sheet steel fastened with smooth-headed bolts and nuts peened in place. Other considerations include “peep holes,” a cipher lock or card access system for the main staff entrance door, double locking locksets with 1-inch throws, warning signs stating doors must remain unlocked during normal operating hours (for fire egress), and warning signs stating “Controlled Area.

14.9.4.2 Windows. Provisions such as roll-up shutters, shall be made for securing all service windows after normal operating hours. Frames holding roll-up shutters and security screens or bars must be securely fastened with smooth-headed bolts with nuts peened in place.

14.9.4.3 Heating and Ventilation Ducts. Duct terminals and connecting points must be in exposed locations where they may be readily observed to detect tampering. Openings of eight inches or larger must be protected with 9 to 12 gauge steel security mesh. The mesh will either be welded to the duct or secured with smooth-headed bolts with nuts peened in place.

14.9.5 Medical Supply Storage Areas or Facilities. In addition to the criteria provided for Pharmacies above, high value, critical and pilferable resources stored in this type of storage area or facility shall be enclosed within two or more time-delay barriers, i.e., fences, security cages, building walls, vaults or locked doors. For specific requirements, see MIL-HDBK-1013/1A (reference 14a) and using Military Department directives.

14.9.6 Other Security Sensitive Areas/Rooms. Other activities or locations may be identified by the using Military Department as security sensitive. These areas/rooms must minimize the security risk for these activities or locations.

REFERENCES

14a. MIL-HDBK-1013/1A, "Design Guidelines for Physical Security of Facilities." (http://www.efdlant.navfac.navy.mil/Lantops_15/ENGR_index.htm)

14b. OPNAVINST 5530.14C, "Navy Physical Security Manual."

SECTION 15: FORCE PROTECTION

15.1 General. Force Protection is a security program intended to protect assets: people, facilities, and equipment. Please refer to draft "Department of Defense Antiterrorism/Force Protection Minimum Construction Standards" (reference 15a) which partially implements the requirement of DoD Instruction 2000.16, "DoD Combating Terrorism Program Standards," with Change 1, May 10, 1999, for development of antiterrorism/force protection guidelines for new construction. This standard provides minimum construction requirements that will be incorporated in inhabited new construction and major renovations. Force Protection guidance is also provided by OPNAVINST 5530.14c, "Navy Physical Security Manual" (reference 15b).

15.2 Section 14: Physical Security. Force Protection design and construction may include features discussed in Section 14: Physical Security. Please review this section.

REFERENCES

15a. (Draft) XX, 2000, "Department of Defense Antiterrorism/Force Protection Minimum Construction Standards."

15b. OPNAVINST 5530.14C, "Navy Physical Security Manual."

SECTION 16: MEDICAL AND DENTAL EQUIPMENT

16.1 General. This section provides guidance on medical and dental equipment for facilities. Equipment procurement for projects shall be in accordance with MIL-STD-1691, "Construction and Material Schedule for Military Medical and Dental Facilities" (reference 16a). This standard provides a uniform basis upon which the using Military Department can identify items of construction and material and fix logistical and financial responsibility (see Section 1).

16.1.1 Approval of Equipment Design Features. Quality and type of equipment and furniture, e.g., stainless steel, steel, wood, gas fired or electric, shall be determined by the using Military Department in each instance, based on the intended life and mission of the facility and the location and circumstance under which construction is to be accomplished.

16.1.2 Approval of Substitutions. When design and space limitations necessitate substitution of equipment in the preparation of drawings, these substitutions shall be coordinated with and approved by the using Military Department. If the substitution results in a change in the Category E and F funding level (decrease or increase), it must also be coordinated with TMA-DMFO.

16.2 Procurement. Provide logistical categories of equipment in accordance with MIL-STD-1691. The using Military Department will transfer items of existing equipment to the new or altered facility whenever feasible and economical. This decision to reuse existing equipment shall be based upon the life expectancy of the equipment at the time of beneficial occupancy (BOD), the repair costs experienced with the existing unit, and the operational considerations involved in moving the equipment prior to operation of the new or altered facility.

16.2.1 Logistical Responsibility. Equipment shall be funded, procured and installed in accordance with the following legend. Each item of equipment is identified in MIL-STD-1691 (reference 16a) by these designations.

16.2.1 A- Contractor furnished and contractor installed (CFCI) from military construction appropriation funds (Military Construction Appropriations, MILCON).

16.2.2 B- Government furnished from the using Military Department's operating funds other than construction and installed by Contractor (GFCI) construction funds (Military Construction Appropriations, MILCON). Operating funds shall be as determined by the using Military Department.

16.2.3 C- Government furnished and government installed (GFGI) from existing assets or from funds other than MILCON as determined by the using Military Department.

16.2.4 D- Other (leased or rented equipment, or that obtained under special conditions as indicated). Funds shall be determined by the using Military Department and other than MILCON.

16.2.5 E- Government furnished and Contractor installed from Military Construction Appropriation funds (MILCON). Delay procurement until the latest date feasible that shall not interfere with project completion to acquire the latest technology.

16.2.6 F- Government furnished and government (vendor) installed from Military Construction Appropriation funds (MILCON). Delay procurement until the latest date feasible that shall not interfere with project completion to acquire the latest technology.

16.2.7 G- Government furnished and government installed from other than MILCON funds through special justification, authorization and funding. Examples of category G equipment or equipment systems are Composite Healthcare (computer) Systems (CHCS) implementation and so forth.

16.2.8 R- Existing government owned equipment that will be relocated and reused. Cost of relocation, if incurred, will be from funds as determined by the using Military Department and other than MILCON.

16.3 Design. Develop equipment plans as a building system integrated with architectural, structural, mechanical, and electrical systems. Equipment shall be arranged and organized so as to provide adequate circulation, workflow, and maintenance clearances.

16.3.1 Layout and Clearances. Arrange equipment to provide service clearances and maintenance access with minimum disruption to work spaces. When expansion is anticipated in a project, allow for the addition of equipment without disruption or reconfiguration of workflow in the layout of sterilizing and sanitizing equipment spaces or any other spaces affected by the addition.

16.3.2 Recessed Equipment. Surgical storage consoles, wall-mounted panels, and accessories in operating rooms shall be flush mounted and of the wall-recessed or through-wall types, for aseptic control.

16.3.3 Casework. All built-in casework shall be fabricated and designated in accordance with Military Specification MIL-C-20709 (reference 16b). All other casework shall be designated, specified, and installed in accordance with MIL-C-29240 (reference 16c), MIL-M-29241 (reference 16d), and other specifications as directed by the Design Agent.

16.3.3.1 Provide corrosion resistant steel (CRS) or other nonporous, seamless joint casework in the following areas: operating and delivery rooms; their sub-sterile and cleanup areas; laboratory (as required by the Military Department); central sterile supply decontamination and clean-up areas; and autopsy and its associated clean-up areas.

16.3.3.2 Movable, modular ("systems") casework systems may be used in projects deemed appropriate by the using Military Department.

16.4 Special Requirements. Special equipment and system planning and utility requirements are incorporated into other technical Sections.

16.5 Food Service Equipment.

16.5.1 Design, construct, and install all serving line and food preparation equipment according to the highest industry standards. Provide

for mobility, flexibility, interchangeability, and ease of cleaning and maintenance for all specified equipment.

16.5.2 Automatic conveyors, belt lifts, and similar devices are unacceptable for delivering patients' meals to the nursing units. Unless special design instructions, approved by DMFO, are issued to the contrary, use a manual, mobile patient tray cart system.

16.5.3 When the kitchen is served by a central steam distribution system, the vegetable steamer-cooker and all other equipment that allows food to be brought into direct contact with live steam is to be served by an independent steam generator. Boiler water treatment renders steam from a central steam plant unsuitable for direct contact with food.

16.5.4 Provide cart wash areas with a combination steam-water mixing unit and a 3 meter (10 foot) hose for washing carts. Provide the area with a floor drain and a separate exhaust fan for evacuating steam heat and vapors.

16.5.5 Specify a conveyor-type dishwasher with sizing dependent on anticipated workload. Provide a booster water heater capable of providing 60 degree C (140 degree F) wash and 82 degrees C (180 degree F) rinse cycle.

16.5.6 Provide the pots and pans wash sink assembly with a spray hose assembly located near the garbage disposal. When specified in the design guidance, automatic pot washers may be used at large facilities and include booster water heater capable of providing 60 degrees C (140 degree F) wash and 82 degrees C (180 degrees F) rinse cycle.

16.6 Dental. Various models of dental radiographic units require different structural wall supports. When two or more units are installed in the same room, use a single control unit when feasible.

16.7 High Technology Equipment. The planning for and inclusion of new or unique medical technology such as linear accelerators, Positron Emission Technology (PET), lithotripsy, Magnetic Resonance Imaging (MRI), hyperbaric chambers, etc., in a MILCON project is the responsibility of the DoD Defense Health Council (DHC). Project specific guidance on equipment of this category will be issued to the Design Agents by DMFO. Design shall be in accordance with the recommendations and guidance of the respective manufacturers.

16.8 Magnetic Resonance Imaging Facilities (MRI). The planning, design, and installation of a Magnetic Resonance Imaging (MRI) system in a Medical Treatment Facility requires extreme care to assure that the magnet is sufficiently isolated from ferromagnetic and radio frequency influences of the impacted environment and that the surrounding environment is isolated from the effects of the magnetic field. Therefore, the selection of the proper siting of the magnet is extremely important and shall be addressed in the earliest stages of the planning and design of the MRI system. Follow the specific guidance of the manufacturer of the selected equipment.

16.9 Hyperbaric Chambers. Hyperbaric oxygen therapy is used as an adjunct to the clinical and surgical treatment of certain diseases. It consists of administering oxygen to the patient at pressures greater than one atmosphere in a compressed air chamber. The DOD agency responsible for design requirements and certification is the Naval Facilities Engineering

Command. This agency is available to assist Design Agents, using Military Departments, and A-E firms as needed.

REFERENCES

16a. MIL-STD-1691, "Construction and Material Schedule for Military Medical and Dental Facilities."

16b. MIL-C-20709, "Casework, Metal and Wood (Medical and Dental)."

16c. MIL-C-29240, "Casework Moveable and Modular for Hospital Laboratories and Pharmacies."

16d. MIL-M-29241, "Material Handling Units for Medical Facilities."

SECTION 17: TRANSPORTATION AND MATERIALS HANDLING SYSTEMS

17.1 GENERAL. This section provides guidance for the study, selection and design of transportation and material handling systems and establishes requirements for elevators, dumbwaiters, pneumatic tube systems, material delivery equipment, pedestrian traffic, service cart systems, and gravity chute return systems for linen and trash in military healthcare facilities. The section is not intended to cover all aspects of transportation analysis or design, but rather to act as a standard for use by qualified medical transport consultants (MTC).

17.1.1 Scope. This section applies to horizontal and vertical circulation within healthcare facilities, and the transportation devices, equipment and methodologies required for efficient, cost effective and timely movement of people, equipment, materials, and related materials management functions. Program factors for patient beds, healthcare procedures and departmental workloads should be provided by the user service and should be utilized in computing traffic demand loads. Select vertical transportation on the basis of acceptable response and waiting time intervals. Calculate the intervals from an analysis of elevator car speed, traffic transfer time, door operation cycle and other applicable system capacity factors.

17.1.2 Waste Management. Section 18, Waste Management, of this Military Handbook is the primary reference for medical facility waste definition, handling, and disposal; closely coordinate transportation systems studies and design with the contents of that Section.

17.1.3 Construction Phasing. Where phased construction is necessary, provide studies and designs for each phase. Provide design for transport system elements not required until later stages to allow for phased installation. Phased installation shall be accomplished with a minimum of rework and without major disruptions to the facility's operations. Give specific consideration to placement of transport devices for present functions and for possible future facility modification.

17.1.4 Addition and Alteration Projects. These criteria are intended primarily for new construction, however addition and alteration projects will meet these criteria to the extent practicable. When additional elevator banks are to be provided for facility additions, they must be located along the same major circulation paths that serve the existing elevators, where feasible. See also Paragraph 17.5.3.6.

17.1.5 Area Allocations. Base the floor area requirements for transportation equipment on the specific equipment included in the transportation analysis. The area allocated for such conveyances is part of the central circulation factor. Additional area for penthouses or other transportation equipment rooms will be considered part of the mechanical space allotment. Consider shaft space as part of the circulation allotment. If the transportation analysis justifies a system requiring more than the assigned area, additional space for elevator lobbies, cart queuing space, shafts and penthouses must be identified early in the Concept Design phase. The designer will submit justification for deviations from criteria, and illustrate how additional area allowances would increase operational efficiency, improve service to patients, or reduce costs. Systems not providing high utilization

of equipment, such as dedicated elevators for movement of patients from emergency to surgery, must be justified on the basis of required planning configuration, the segregation of incompatible traffic, or operational economical benefits.

17.2 TRAFFIC SEPARATION AND CIRCULATION. Traffic is categorized as follows:

a. Pedestrian - inpatient, outpatient, staff and visitor;
b. Vehicular - patient transport;
c. Equipment/Materials - sterile, clean and soiled equipment and materials.

Review each category independently to determine its unique transportation requirements.

17.2.1 Traffic Separation. Establish traffic patterns to separate the various traffic types in an efficient, logical, safe and secure manner, while maintaining levels of aseptic control consistent with the requirements of the facility. Consider all of the following factors for separation for both horizontal and vertical circulation: patient privacy; handicapped access; aseptic control; routing efficiency; utilization of appropriate hardware systems, safety and security. Where circulation conflicts occur, prioritize traffic as follows:

a. Patient
b. Staff
c. Equipment
d. Visitors
e. Materials/logistics.

When a facility is sufficiently large and complex to require more than four elevators, separate passenger and vehicular elevators.

17.2.2 Circulation. Design the overall circulation to provide the most direct routing practical. Place elevators on the direct horizontal path between the areas they serve, wherever possible.

17.2.3 Equipment/MaterialsCirculation. Separate the equipment/materials traffic from patient and visitor traffic as noted on the Elevator Traffic Separation Guide Matrix, Figure 17.1. Where separate elevators are not required, separate the materials traffic by schedule and policy. Careful, simple and clear space planning can maximize separation between visitor/patient and staff/materials/logistics. Primary horizontal materials circulation should occur on a single level, with vertical penetrations that are convenient to heavy use areas. It is undesirable for carts, pallet trucks, and similar material carriers to be pushed long distances on floors and corridors routinely traveled by patients or visitors. Establish horizontal right-of-ways to:

a. Aid in directing traffic to the appropriate vertical core, while avoiding inappropriate elevators and other building areas.
b. Provide high levels of patient privacy.
c. Eliminate potential contamination of clean and sterile areas.

17.2.4 Automated Cart Traffic. Do not plan automated cart traffic in

corridors, or spaces, with patient or visitor traffic. Automated cart traffic may occur in staff corridors and dedicated spaces, provided adequate warning and safety devices are furnished. Vertical movement of automated carts shall occur in dedicated elevators. Arrange cart lifts to provide adequate cart staging that is independent of workroom or circulation areas.

17.2.5 Clean and Soiled Material Separation. Materials management programs shall provide for clean and soiled separation consistent with all applicable codes and standards, including those of the Joint Commission for the Accreditation of Healthcare Organizations (JCAHO).

17.2.5.1 Soiled Material. Soiled materials are normally transported in separate covered or closed carts designed to provide containment of the material. Soiled material transport may occur in the same corridor and elevator systems that handle other traffic; however, soiled materials are not transported on the same elevator at the same time with patients, visitors, or clean or sterile materials. Transport circulation design shall allow soiled carts to be adequately washed prior to reuse as a soiled container, and washed and sanitized prior to use for clean materials.

17.2.5.2 Sterile Material. Transport all sterile material for use in Surgery, Catheterization and Labor/Delivery or other areas requiring sound aseptic controls from the sterile processing / storage area to its destination via a clean route that will not compromise the integrity of the material. Where case carts are used, they shall be transported from sterile storage to the clean surgical core by means that protect the cart and its contents from contact with less clean environments.

17.2.6 Palleted Material. Except in warehouses and bulk storage areas, materials shall not normally be moved on pallets beyond the main receiving and storage areas.

17.2.7 Elevator Traffic Separation Guideline ETSG. Figure 17.1 provides a matrix showing general guidelines for the separation of traffic. To use the Elevator Traffic Separation Guideline, review the "Characteristics" column for the approximate conditions represented by the project. Then review the column represented by the "Facility Type" being considered to determine general separation considerations. The most severe separations are to be followed. Each individual facility must be analyzed for unique considerations; however, vertical traffic separation will follow Figure 17.1, as a general guideline.

17.3 TRAFFIC FLOW RATES AND QUEUING. Design general circulation right-of-way, including corridors, staircases and lobbies to provide the following general flow and queuing rates:

17.3.1 Corridor Widths. Design corridor widths to provide average flow volumes through corridors of a maximum of 3 to 4.5 pedestrians per meter of walkway width, per minute (10 to 15 pedestrians per foot of walkway width, per minute). Corridor widths should be not less than 1.8 meters (6 feet) for patient/visitor corridors and 2.4 meters (8 feet) for patient corridors with gurneys and/or carts.

17.3.2 Pedestrian Area. Average Pedestrian Area Occupancy (APAO) shall not be less than 1.4 sm (15 sf) per person in walkways.

17.3.3 Open Lobby Queuing. Average queuing level for open lobby areas

(ingress / egress) points shall approximate 1.2 sm (13 sf) per person, leaving inter-person spacing of approximately 1.22 m (4 ft).

17.3.4 Informal Queuing. Informal, unorganized queuing in service areas shall be no less than 0.93 sm (10 sf) per person.

17.3.5 Ordered Queuing. Queuing in ordered queue areas, such as lines at outpatient pharmacy windows and in elevator lobbies, shall be not less than 0.65 sm (7 sf) per person.

17.4 Ramps. Avoid the use of ramps. If ramps must be used, the maximum slope shall be less than 1:20, and the ramp must comply with the applicable sections of the Americans with Disabilities Act Accessibility Guidelines (ADAAG). See Section 12 of this Military Handbook for additional information.

17.5 Elevator and Escalator Planning Factors.

17.5.1 Population. The populations to be considered for each building type are as follows:

17.5.1.1 Staff. Determine staff populations for each area within a given facility by actual number, not by Full Time Equivalent FTE (i.e., two 20 hour per week employees are equal to two staffers, not one FTE).

17.5.1.2 Patient. Patient populations include all persons receiving treatment at the facility. They are categorized as inpatient when they occupy an inpatient bed overnight, and as outpatient when treatment does not require an overnight stay.

17.5.1.3 Visitors. Calculate visitor populations from data supplied by the facility. Visitors shall include all persons not accounted for as staff or as patients, including but not limited to:

a. Persons visiting inpatients and accompanying outpatients.
b. Persons who are picking up or dropping off specimens, pharmaceuticals, records or X- rays.
c. Salespersons;
d. Students, outside maintenance people and others as applicable to the facility in question.

17.5.2 Traffic Patterns, Migration. Review each facility for general circulation and right-of-way. Where pedestrians have the option of using more than one elevator group, increase the elevator population predicted for each individual group by a migration factor of at least 10 percent. Consider greater factors for elevators in close proximity to cafeterias, main ingress/egress areas, etc. The design must also consider migration of staff, visitors and patient vehicular traffic to service cars. A factor of at least 10% of the staff should be considered in the service elevator car handling capacity.

17.5.3 Elevator Traffic Study and Analysis ETSA. Prepare the Elevator Traffic Study and Analysis to determine the appropriate types, locations, sizes, speeds and groupings of elevators. For facilities less than 4,640 gross square meters (50,000 GSF), an elevator traffic study and analysis may not be required. Determine the loading density and the load-unload time for each

facility during site visits to account for unique conditions at a facility and the cultural aspects of the area (i.e., amount of "personal space" required by individuals; number of visitors per patient; number of escorts or companions accompanying outpatients; etc.).

17.5.3.1 Elevator Loading Densities. Maximum estimated densities for elevator loading will approximate:

a. 0.23 to 0.325 sm (2.5 to 3.5 sf) per pedestrian.
b. 0.42 to 0.6 sm (4.5 to 6.5 sf) for a person on crutches/walker.
c. 0.6 to 0.79 sm (6.5 to 8.5 sf) per wheelchair.
d. 1.3 to 1.5 sm (14 to 16 sf) per gurney.
e. 1.67 to 2.23 sm (18 to 24 sf) per bed.

Verify average loading densities during site visits of existing facilities.

17.5.3.2 Elevator Load and Unload Times. Estimated average load and unload times, using the elevators as specified herein, will approximate the following times:

a. 2.2 to 2.4 seconds per normal pedestrians in passenger elevator cars;
b. 2.2 to 3.4 seconds per pedestrian impaired by medical/pharmacological treatment.
c. 4.8 to 8.0 seconds per wheelchair.
d. 4.4 to 9.6 seconds per person on crutches/walkers.
e. 7.5 to 12.0 seconds per gurney.
f. 8.8 to 15.0 seconds per bed.

Verify average load and unload times during site visits to existing facilities.

17.5.3.3 Elevator Traffic Analysis. For passenger and patient service elevators, base the elevator traffic analysis on average high peak traffic conditions over a period of fifteen minutes or less.

17.5.3.4 Passenger Elevators. For passenger elevators, the Elevator Traffic Study and Analysis must evaluate all peak periods, including but not limited to:

a. Morning Shift Change Peak (primarily an up-peak period).
b. Lunch Peak (heavy two way traffic).
c. Afternoon Shift Change Peak (primarily heavy down peak, with moderate opposing traffic).

When determining elevator loading, factor the number of persons/vehicles that can physically load into an elevator into the traffic study. Loading densities for hospital and outpatient clinic elevator cars are unlike elevator populations in most other buildings. Where pedestrian traffic is mixed with substantial vehicular traffic, the space used by carts, gurneys, beds, portable X-Ray equipment and the like, must be factored into the Elevator Traffic Study and Analysis. Identify impacts of overlapping traffic patterns between inpatient and outpatient functions. In existing buildings, the populations must be studied during site visits to determine the percentage of traffic that is consumed by crutches, braces, wheelchairs, casts, and similar items.

17.5.3.5 Patient Service Elevator Cars. For patient service cars, evaluate the primary inpatient transportation period to determine if patient service elevator cars have excess capacity which can augment passenger elevator cars during peak pedestrian periods. Under normal operation, all elevators, which operate as a group, have circuitry that monitors cars in operation. When one or more cars are out of service, the monitoring or dispatching system senses the condition and automatically selects an available car within the group for response to hall calls. During an emergency power condition, the ASME A17.1 Code requires all groups of elevators, which are supplied with an alternate power source, to automatically sequence one at a time to the main egress level. Once all cars have reached the designated level, the elevator system must automatically select one car within the group to operate. A manual override switch must also be provided, so emergency personnel may select a particular car if desired.

17.5.3.6 Addition/Alteration Projects. For Addition/Alteration projects, provide specific recommendations on how the addition will augment the existing building systems. Potential migrations from existing buildings, for the purpose of using superior transportation elements in the addition, must be considered in the new building populations.

17.5.3.7 Materials Handling and Logistics Elevators. For materials handling and logistics elevators (manual systems), base the Elevator Traffic Study and Analysis on the materials and cart traffic predicted by the materials management and handling programs, plus 20% spare capacity, during the peak hour, for non-scheduled moves, plus an additional 20% spare capacity to allow for materials handling and materials management program flexibility. In the absence of definitive operational schedules and anticipated commodity delivery criteria from the user service, assume the peak hourly demand for material delivery and non-ambulatory patient traffic to be 10 percent of the combined total daily traffic load for the Elevator Traffic Study and Analysis.

17.5.4 Escalators. Consider escalators for pedestrian traffic where justified by traffic studies. Consider escalators for frequent vertical movement of large numbers of people in multi-floor outpatient clinics which exceed 2,000 patient visits per day, or in hospitals which exceed a 500 bed capacity and have principal patient entrances on two levels. Escalators are not subject to analysis or criteria measurements for average intervals. Design escalators to handle large numbers of pedestrians in a safe and efficient manner. Designs shall consider that traffic will include persons who may be slightly impeded by physical disabilities or by virtue of medical / pharmacological treatment. Design escalators with safe travel speeds and adequate entrance and exit queuing areas to handle the expected volumes. The minimum escalator width will be 815 mm (32 inches) and the rated step speed will not exceed 450 mm/second (90 fpm.)

17.6 Elevator Performance Criteria. Elevators provide the basic transportation mechanism for most vertical moves in multistory buildings. Selection of the proper number, type, speed, location and general characteristics for elevators is crucial to an efficient and effective transportation system. Provide the minimum number of elevators necessary that will satisfy the following criteria:

17.6.1 Average Interval. Figure 17.2 provides requirements for average intervals for passenger cars, combined use and patient service cab and dedicated materials cars. These average interval times do not specify a

particular calculation procedure that should be utilized in ascertaining the desired result (i.e., an acceptable response time). Base elevator calculations on the areas served. The designer may utilize any suitable calculation procedure provided that all assumptions and logic flow/calculations in the analysis are clearly stated. In addition, the designer will consider loading/unloading time, door operation time, elevator velocities/accelerations and any other parameters that influence the round trip time utilized in the analysis (state all assumptions built into this value.) Alternate systems proposed will be evaluated utilizing a life-cycle-cost analysis.

17.6.2 Passenger Handling Capacity. Where the exact peak traffic conditions cannot be obtained or calculated for a given facility, Figure 17.3 may be used.

17.6.3 Patient Service Handling Capacity. The 5 minute peak handling capacity for patient service cars, not including materials or logistics traffic, shall be calculated as follows:

a. Total Moves / Day x 18.2% = Peak Hour Moves
b. Peak Hour Moves /12 = Average 5 Minutes
c. Average 5 Minutes x 1.25 = Peak 5 Minute Handling Capacity.

The Elevator Traffic Study and Analysis must detail these moves.

Select passenger elevator systems to provide a 35 second response waiting time interval based on 5 minutes of two way peak period traffic for the facility, assuming a maximum car capacity of 60 percent, that considers the worst case traffic loading scenario, computed using the most accurate of historical/actual traffic data or the projected traffic data/consideration set forth below:

a. Ten percent of the anticipated visitor and staff traffic.

b. Two percent of the anticipated ambulant inpatient traffic.

c. Two percent of the anticipated non-ambulant inpatient traffic.

d. Admissions/discharges based on 20 percent of the inpatient traffic (or a reasonable assumption).

e. Miscellaneous traffic loading not covered by the above factors (state assumptions).

17.6.4 Other Service Traffic (Materials, Housekeeping, Construction and Maintenance Traffic). Peaks for these traffic types shall be calculated in 15- minute intervals, with an allowance of a 5-minute peak representing 40% of the peak 15 minute total. Base studies on the actual total number of materials handling, logistics and housekeeping moves estimated by the materials handling analysis and the materials management report, plus 40% allowance for unscheduled moves and for future schedule flexibility, plus 4% allowance for construction and maintenance traffic.

Hospital service elevator systems will be selected to provide a 45 second response waiting time interval based on the most intense hourly traffic demand anticipated.

Clinic passenger/service elevator systems, either attached to a hospital or freestanding, will be selected to provide transportation to floors above grade at a 40 second response waiting time interval based on a 5 minute peak period for the facility that considers the worst case traffic loading scenario, computed using the most accurate of historical/actual traffic data or the projected traffic data/considerations set forth below:

a. Ten percent of the anticipated visitor and staff traffic.

b. Miscellaneous traffic and material handling traffic data (state assumptions.)

c. For broad planning purposes, including (a) and (b) above a factor of 16.6 percent may be utilized.

17.6.5 Average Maximum Ride Time (AMRT). Figure 17.4 lists the allowable Average Maximum Ride Time.

17.7 ELEVATOR DESIGN CONSIDERATIONS

17.7.1 Codes. Elevators shall be designed in accordance with all applicable Federal, State and local codes, including NFPA, “National Electrical Code”, ASME A17.1, A17.2, A17.3 and A17.5 (reference 17a, 17b, 17c, and 17d). This includes designing to the appropriate rating/load classification for the intended application. Elevators shall be designed to meet all UFAS and ADAAG provisions applicable to the project.

17.7.2 Elevator Types. Elevator types and speeds shall comply with Figure 17.5. Higher speeds may be used if needed to satisfy traffic demands. Elevator selections will not exceed the elevator rise criteria given in Figure 17.5.

Electric traction elevators may be used for passenger service and hospital service applications.

Hydraulic powered elevators may be considered for use where vertical travel is less than 13.7 m (45 feet), or when overhead clearance is limited. Speed for hydraulic elevators will be minimal in the up direction with full rated loads. Valves that are contained in the pump unit assembly will control hydraulic acceleration, deceleration and leveling.

Hydraulic elevators rated for 80 starts per hour shall be utilized for light duty/light usage applications. Hydraulic elevators rated for 120 starts per hour shall be utilized for heavy duty/heavy usage applications.

17.7.3 Elevator Location and Travel Distances.

17.7.3.1 Passenger and Combined Use Elevators. Elevators will be located in direct relationship to major building entrances and convenient to major traffic generating functions such as lobbies. Passenger and combined use elevators shall be planned to provide a maximum walking distance of 61 m (200 ft). A distance of 46 m (150 ft) is preferred.

17.7.3.2 Service Elevators. Service elevators shall be planned to provide a maximum walking distance of 61 m (200 ft) for users on patient floors. A distance of 52 m (170 ft) is preferred.

17.7.3.3 Added Elevators. Where added elevators are provided solely for the purpose of meeting the distances noted above, and where they do not provide primary elevator service to main lobbies and main building ingress/egress points, they are exempted from the standard average interval and handling capacity criteria. Provide average intervals of under 55 seconds and handling capacity equal to 7.5% of the population within the area of service provided. Cars added for this purpose shall be service configured.

17.7.3.4 Materials Handling and Logistics Elevators. Plan materials handling and logistics elevators to provide service as close to the user areas as practical. Primary horizontal circulation should be on one level, where possible. Maximum distances for travel from the elevators to materials storage areas shall not exceed 53 m (175 ft) on inpatient floors and 61 m (200 ft) for all others, except for the primary horizontal circulation floor, where no limit is dictated.

17.7.3.5 Service Elevator Location. Locate elevators so that visitors do not normally pass service or materials cars en route to passenger cars, unless those service cars are substantially hidden from view.

17.7.4 Elevator Lobbies and Groupings.

17.7.4.1 Where four or more cars are required within a group, place cars in opposite banks, opening into a common lobby.

17.7.4.2 For service and combined use cars, two in a row are preferred and not more than three in a row should be used; for passenger cars three in a row are preferred and not more than four in a row should be used, as shown in Figures 17.6 and 17.7.

17.7.4.3 If more than six service cars, or eight passenger cars are required in one area, provide two smaller, strategic groups.

17.7.4.4 Place adjacent car entrances either in straight lines or in opposite banks to each other as shown in Figures 17.8 and 17.9.

17.7.4.5 Elevator ingress / egress should be from a distinct elevator lobby as shown in Figure 17.10 and not directly from a corridor. Minimum/maximum lobbies for service cars are:

a. 3.66 to 4.27 m (12 to 14 ft) when opening opposes a wall.
b. 4.27 to 4.88 m (14 to 16 ft) when the opening opposes another elevator.

Care should be taken to avoid creating dead end lobbies in excess of life safety requirements. Minimum / maximum lobbies for passenger cars are:

c. 3.05 to 3.66 m (10 to 12 ft) when the opening opposes a wall.

d. 66 to 4.27 m (12 to 14 ft) when the opening opposes another elevator.

Where elevators are accessed from corridors, as shown in Figure 17.11, they shall be located on one side of the corridor only (maximum of three cars), and shall be setback:

e. 2.44 m to 3.66 m (8-12 ft) for service and combined use cars.

f. and 1.22 m to 2.44 m (4-8 ft) for passenger cars.

17.7.4.6 Passenger and service cars shall not share the same lobby.

17.7.4.7 Where two or more elevator group lobbies are adjacent, provide walls or other building features to prevent a free flow of traffic between those lobbies (to minimize one user from placing calls to both groups).

17.7.4.8 Elevator lobbies generate noise and must be acoustically isolated from critical care areas.

17.7.4.8 All elevator equipment rooms should be electrically and acoustically isolated to prevent interference with building electronic equipment and objectionable noises. Elevator equipment rooms shall be acoustically separated from critical care and occupied rooms.

17.7.4.9 Hospital type elevator cars shall have interior dimensions that accommodate a patient bed with attendants. Cars shall be at least 1.73 meters (5'-8") wide by 2.74 meters deep (9'-0"). Car doors shall be side opening with a minimum clear opening of 1.22 (4-0") meters wide and 2.13 meters (7-0") high. In renovations, existing elevators that can accommodate patient beds used in the facility will not be required to be increased in size. Hospital type elevator cars Provide protective cab interior blankets. Wall mounted blankets for interior wall surfaces providing protective coverage from the finished floor to 300 mm (12") below the cab ceiling.

17.8 SYSTEMS DESIGN.

17.8.1 Transportation systems design will consider traffic demand, vertical travel distance, mix of traffic type in the areas to be served, and mode of containerization. Traffic demand and travel distance will determine equipment type and speed required. Traffic mix and mode of containerization will determine load capacity, platform size, configuration and door type.

17.8.2 Figure 17.12 illustrates a typical passenger elevator configuration, and figures 17.13 and 17.14 illustrate the configuration of typical hospital service elevators. Figure 17.13 is similarly applicable to typical clinic elevators. All hospital elevators (passenger and service) must be capable of transporting patient litters.

17.8.3 Front and rear opening hospital service elevators (Figures. 17.15 and 17.16) may be used as swing elevators for both passenger and service traffic when space or budget restrictions limit use of separate passenger elevators.

17.9 TRAFFIC DATA

17.9.1 Types of personnel and materials transactions define the nature of traffic circulating between various health facility departments. The following traffic factors may be used to compute traffic volumes for various traffic types, in lieu of specific direction from the User service.

17.9.2 Pedestrian Traffic Factors.

17.9.2.1 Assume the number of visitors to inpatient areas to average one visitor per inpatient bed per day.

17.9.2.2 Assume the number of professional and administrative staff to be 40 percent of the total facility population. Alternatively, the following ratio can be used: 1 staff for each 2.7 beds. Assume staff elevator trips to be two trips per day, including the total number of staff.

17.9.2.3 Assume ambulatory inpatients to comprise 60 percent of the inpatient census, and this number of inpatients will make 5 elevator trips each day.

17.9.2.4 Assume each clinic patient to have one accompanying person for a total of 2 persons per patient visit.

17.9.3 Nonambulatory patient and materials handling factors.

17.9.3.1 To determine the number for prepared food trays, multiply the number of meals served on all nurse units times the 3 meals served each day. The same dietary carts will be used for collection of soiled trays. The number of food carts will depend on the cart size chosen for a particular installation.

17.9.3.2 One patient nourishment cart will serve all patients on one ward, twice daily. The same cart will be used for collection of soiled nourishment containers.

17.9.3.3 Base linen cart capacity on a factor of 0.06 cubic meters (2 cubic feet) per bed for clean linen delivery, while 0.12 cubic meters (4 cubic feet) per bed is required for soiled linen collection. Limit linen supply carts to 1.2 cubic meters (40 cubic feet) capacity. Soiled linen return carts will depend upon the soiled linen collection system selected.

17.9.3.4 Base the number of sterile reprocessed supply carts on the following factors:

a. Surgery: The average number of surgical procedures per day times 1.2 carts per procedure, plus one backup cart per operating room per day.

b. Delivery: The average number of obstetrical deliveries per day times 1.5 carts per procedure, plus one backup supply cart per delivery room per day.

c. Emergency: The average number of patient visits per day times one cart for each 80 patient visits.

17.9.3.5 The required number of medication carts will be determined as follows:

a. Inpatient bed areas: One cart for each inpatient nursing unit.

b. Surgery and Delivery: The average number of procedures per day times one cart for each 20 procedures.

c. Emergency and Clinics: The average number of patient visits per day times one cart for each 160 patient visits.

17.9.3.6 Non-sterile supply carts will be provided as follows:

a. Inpatient Nursing Units: A volume of 0.05 cubic meters (1.7 cubic

feet) of non-sterile supplies will be needed for each bed each day. Each cart will be assumed to be of 0.85 cubic meters (30 cubic feet) capacity.

b. Radiology: One cart for every 300 radiographic procedures for each average day.

c. Laboratory: One cart for every 3,000 laboratory procedures for each average day.

d. Emergency and Clinics: The average number of patient visits per day times 0.06 cubic meters (2 cubic feet) of non-sterile supplies per visit per day.

e. Administration: One non-sterile supply cart for each 100 beds each day.

17.9.3.7 The number of gift and mail carts will be determined as follows:

a. Patient Nursing Units: One cart for every 40 beds each day.

b. Administration: One cart for every 100 beds each day.

17.9.3.8 Housekeeping supplies will require two carts per floor per day.

17.9.3.9 Waste collection factors will be as follows:

a. Inpatient Nursing Units: 0.3 cubic meters (one cubic foot) per bed per day.

b. Surgery and Delivery: One cart for each 20 procedures per average day.

c. Radiology: One cart for each 200 procedures per average day.

d. Laboratory: One cart for each 2,000 determinations per average day

e. Administration: One cart each day for every 100 beds.

f. Dietary: 0.06 cubic meters (two cubic feet) of dietary waste per bed each day.

g. Emergency and Clinics: The average number of patient visits per day times 0.06 cubic meters (2 cubic feet) of waste supplies per visit per day.

17.9.3.10 Compute inpatient stretcher trips as 40 percent of the average inpatient census times two trips per day.

17.9.3.11 Operation and maintenance activity procedures require 0.2 elevator trips per bed each day.

17.9.3.12 Special equipment supply procedures require one elevator trip per day per floor.

17.9.3.13 Inpatient administration and discharge activity produces elevator traffic equal for 20 percent of the hospital bed capacity times two trips per

day.

17.10 PASSENGER AND HOSPITAL SERVICE ELEVATOR FEATURES.

17.10.1 Operation. Elevators will be arranged to operate with or without attendants and will be provided with key operated switches for hospital priority service. Each elevator bank will be equipped for emergency operation by means of a key operated switch at each landing. This switch will cause the closest available car to bypass all other calls in response to an emergency call. Duplex collective operation shall be provided for two-car banks. Three or four car banks shall be group operation. An on-demand microprocessor system shall be provided for all elevator controls.

Controls shall operate properly with a 500 kHz to 1300 MHz radio frequency signal, transmitted at a power level of not less than 100 watts effective radiated power (ERP) at a distance of three feet. The equipment shall be provided with electro-magnetic interference (EMI) shielding within FCC guidelines. Noise level relating to the elevator equipment and its operation shall not exceed 80 dBa in the machine room, measured three feet above the finished floor and three feet from the equipment.

17.10.2 Code Blue Controls. Provide medical emergency elevator control, sometimes called Code Blue Control, as a means of overriding normal operation of elevators capable of medical emergency transportation of a patient in bed, accompanied by attendants. This control feature will be provided in conjunction with, or in addition to, controls provided for fire department emergency use. Firefighters' operation, as defined in ASME A17.1, shall override Code Blue Control.

17.10.3 Doors. Passenger and hospital service elevators will have center opening doors. Two-speed side opening doors may be provided in hospitals, which are equipped with separate material handling systems. Door closing time must comply with ASME code requirements. Minimum door opening speed will be 0.760 meters per second (2-1/2 feet per second) except for high speed elevators 2.54 meters per second (500 fpm) and over where the door opening speed will be 0.760 to 0.910 meters per second (2.5 to 3.0 fps.) Equip hospital service elevators with buttons to extend door open time, adjustable between 0 to 30 seconds. All elevator car doors shall be provided with infrared screen detectors.

17.10.4 Signals. Install hall position indicators at the main floor(s) containing the command and outpatient entrances. Provide hall push button stations with call register lights. Install hall lanterns with an audible signal on all elevators. Install car position indicators in each car with floor designations, a floor directory signal and direction arrows. Car operating panels will use car register type floor buttons. Provide a lobby control panel on elevator banks with two or more cars.

17.10.5 Emergency Power. Connect elevators to operate on alternate source emergency power in conformance with electric power and lighting criteria. Emergency power selection switches are required for each bank of elevators. The elevator control system will have an automatic transfer switch, which returns each elevator to the main floor, one car at a time. The last car to arrive at the main floor will automatically be selected to operate at normal design speed.

17.10.6 Machine Rooms. Locate electric traction elevator machine rooms

above elevator hoistways. Size machine rooms to accommodate the maximum space requirements anticipated from competitively bid projects, including adequate space to service the equipment. Provide air conditioning in machine rooms to maintain ambient temperature below 32 degrees centigrade and above 15 degrees centigrade (below 90 degrees F and above 60 degrees F.) Provide filters to remove dust. Size hydraulic elevator rooms accordingly for the equipment, adjacent or at least within 15 meters (50feet) of the elevator and should be on the lowest served floor.

17.10.7 Elevator Car Enclosure. Car lighting will be either indirect or of the luminous ceiling type. Provide mechanical exhaust for elevator cars.

17.11 MATERIALS HANDLING AND MANAGEMENT SYSTEMS CONSIDERATIONS

17.11.1 Adjacency Considerations and Handling Considerations. Figure 17.17 provides a guideline for adjacencies of materials management areas and functions.

17.11.2 Materials Handling System Alternative Matrix. The specific systems included in a project shall be determined by detailed physical, functional and economic including life cycle cost studies (LCC). As a minimum, consider the systems noted on Figure 17.17.

17.11.3 Manual Bulk Handling Systems. Use manual systems where semi or fully automated systems cannot be physically and economically (LCC) justified. Manual tasks such as pushing, pulling and carrying shall consider safety and human engineering factors. Designs should use general ergonometric standards applicable to "industrial women". Additional criteria for study / application of manual systems include:

17.11.3.1 Movement Loads. The design shall limit the sustained effort to move loaded carts to 10.43 kg (23 lb) pushing force where distances exceed 30.5 m (100 ft), on hard level surfaces. Initial forces required to initiate movement shall not exceed 22.68 kg (50 lb).

17.11.3.2 Movement Speeds. Use the following movement speeds when studying manual and automated alternates:

a. Walking unencumbered, through generally open corridor spaces - 1.32 m/s (260 FPM);

b. Walking while carrying tote box or medium sized parcel under 11.34 kg (25 lb) - 1.07 m/s (210 FPM)

c. Pushing cart through substantially straight and open areas - .89 m/s (175 FPM);

d. Pushing cart through areas that are congested, or where substantial numbers of turns are involved - 0.46 to 0.686 m/s (90 to 135 FPM);

e. Or, as recommended by the MTC based on restrictions of the location.

17.11.4 Semi-Automatic Bulk Handling Systems.

17.11.4.1 Elevators. Refer to the paragraphs above.

17.11.4.2 Gravity Chutes. Provide chute access on user levels through a separate room with dimensions adequate for holding the collection cart, with room doors closed, while the attendant is charging the chute. Where both laundry and trash chutes are used, each shall be in a separate and clearly marked room. Size terminal rooms to accumulate the amount of materials dictated by the waste management study. Minimum dimension shall allow accumulation of twenty-four hours of collected materials. Design shall ensure that collected material does not block the entrance door or hinder the pickup operation.

a. Consider gravity chutes, either alone or in combination with horizontal pneumatic chutes, for internal waste transportation in multi-story institutions. Also consider hospital service elevators and cart lifts for internal transportation of solid wastes in multistory buildings.

b. When gravity chute systems are included in multistory facilities, provide one chute system for soiled linen with a separate chute system for waste. Single chute, dual purpose systems will not be used. Separate charging areas, separate enclosure shafts and separate discharge rooms are required, although they may be side by side. Separate collection areas for soiled linen and for solid waste will be located near the loading dock. Bagged solid waste may be manually handled at the bottom of gravity chutes by loading the bags into carts, which are subsequently moved to the disposal point, or it may be automatically discharged into compactors.

c. Design gravity chutes in accordance with NFPA 82. The minimum diameter of gravity rubbish chutes will be 600mm (24 inches.) Chutes must penetrate the roof of the building, be within a fire rated enclosure, be provided with automatic sprinklers, and be charged within a fire-rated room, which is provided with automatic sprinklers. These requirements apply to both soiled linen and solid waste gravity chutes. Chutes are not required to be refractory lines.

d. Vertically aligned charging doors of the same chute system will be interlocked so that only one station can be charged at one time, thereby reducing the possibility of charges jamming within the chute. Provide gravity chutes with negative pressure, relative to the charging area, to eliminate aerosol discharged into the charging areas when charging doors are opened.

e. The concept design analysis will contain basic chute system recommendations.

17.11.4.3 Dumbwaiters, Counter Height. Automatic loading and unloading shall be considered. Dumbwaiters, without automated devices, shall have powered or manual doors. Powered doors shall be vertical lift type and have upper and lower safety edges.

17.11.4.4 Dumbwaiters, Floor Loading. Automatic loading and unloading shall be considered. Floor loading dumbwaiters shall have powered vertical lift bi-parting doors with both upper and lower safety edges.

17.11.4.5 Dumbwaiter Platform Size. Dumbwaiter systems will be limited to a maximum platform size of 0.8 square meters (9 square feet) and maximum

capacity of 225 kilograms (500 pounds). A platform size of 680mm x 1200mm (27 by 48 inches) is acceptable. Automatic loading and ejection devices of larger capacity and size, used in conjunction with automatic cart lifts, will conform to the ASME standards for elevators. Determine the dimensions of the car lift platform by the largest cart selected for dietary, linen or other materials distribution.

17.11.4.6 Speeds for automatic cart lifts will be as follows:

Number of Floors	Type of Drives	Rated Speed M/S (fpm)
4 - 5	Geared	1.015 (200)
6 - 9	Geared	1.524 (300)
10 and over	Gearless	2.540 (500)

17.11.4.7 Dumbwaiter and Cart Lift Control. Distribution and Return programs will be provided for dumbwaiter and cart lift operation. The control station will contain a switch from program selection and a series of dispatch buttons that correspond to the floors served. Design the system to permit dispatching carts to any landing from the central dispatching area and to provide for return of carts only to the central dispatching area.

17.11.4.8 Dumbwaiter and Cart Lift Signals. Stations at each floor or landing will contain lights to indicate which program is in effect.

17.11.4.9 Cart lifts with automated transfer devices. Doors shall be power operated with upper and lower safety edges. Maximum cart lift capacity shall be 454 kg (1000 lb).

17.11.5 Auto Guided Vehicle System - Vertical Automation. Systems designed for vertical-only transportation of materials on carts shall use elevators, guide path, and other devices, as applicable. Designs shall consider future upgrade to allow horizontal travel.

17.11.6 Automated Horizontal and Vertical Bulk Handling Systems. Automated cart transportation systems may be used where LCC justified for horizontal and vertical transportation of materials.

17.11.6.1 Automated Guided Vehicle Systems. Automated Guided Vehicle Systems shall be an integrated turnkey automated cart transportation system. Design the Automated Guided Vehicle Systems to incorporate the latest state of the art in proven technology; systems not proven in previous applications shall be avoided. Automated Guided Vehicle Systems may utilize a variety of transportation vehicles including "cart carrying" type, forklift type, tow type, and Automated Storage and Retrieval System type.

Consider the use of automatic cart systems for material distribution provided the use of automated equipment can reduce the number of service elevators required and the installation can be justified on a cost effective basis. An increase in construction cost must be justified by a corresponding decrease in operating or other life-cycle, cost, through reduction of manpower needs, reduced energy consumption, or improved service to patients.

17.11.6.2 Other Automated systems. Other Automated Vertical and Horizontal Cart transportation systems may be reviewed where applicable and cost effective for a given project.

17.11.6.3 Pneumatic Trash / Linen. Pneumatic Trash / Linen shall be fully pneumatic, gravity pneumatic or multi-loading. Hybrid systems are permitted where required. In general, no station shall be designed that is "up-send" in nature. All materials should travel in the down direction after first being loaded into the system. Verify system traffic capabilities by detailed traffic studies.

a. Gravity-pneumatic systems, a combination of gravity chutes for vertical transportation and pneumatic chutes for horizontal transportation, are subject to the same fire protection requirements as gravity systems.

b. In composite systems, the gravity chute will be equipped with a storage section at the bottom of the chute. Gravity chute charging stations equipped with electric control systems may be loaded with as many bags of waste or linen as necessary. Bags are accumulated in the storage section and are removed as a single load on demand.

c. Fully automatic chute systems containing both horizontal and vertical elements, with automatic transfer systems, are not normally allowed in health facilities. Where a vertical rise is required for a pneumatic chute intended as a collector for gravity chutes, the vertical rise must be installed in a fire-rated enclosure in accordance with NFPA 82.

d. If horizontal pneumatic chutes must be manually charged, enclose charging doors and frames in fire-rated rooms. Sprinklers in the charging stations must protect pneumatic chutes. Charging stations will have a receiving compartment with an outer and inner door. When the door is opened to put in a load, the inner door will be automatically locked so that the load cannot freely enter the chute. When the outer door is closed, the inner door will open in its sequential turn and the load will be automatically transported by negative pressure to its point of discharge. Only one load will move through each leg of a pneumatic chute system at one time.

17.11.7 Unit Handling Systems.

17.11.7.1 Manual Systems. Use manual systems where semi, or fully automated systems cannot be functionally, physically or economically (LCC) justified.

17.11.7.2 Pneumatic Tubes. Pneumatic tube systems may be provided where economically justified. Design systems to reach individual project peak traffic requirements, plus a minimum spare capacity of 20%. Designs shall provide for soft handling of all systems where laboratory specimens and other delicate items are transmitted. No specific correlation can be made between the number of beds in a health facility and the need for a pneumatic tube system. Provision of pneumatic systems must be consistent with requirements for a particular health facility regardless of the size of the facility. Select tube systems which provide automatic control of carrier movement. A selector device which permits correspondence with any station served by the system will set destination of the carrier.

17.11.7.3 Automated Box Conveyors. Automated Box Conveyors systems may be provided when economically (LCC) justified. Design systems to serve peak traffic requirements plus a minimum spare capacity of 35%. Selective vertical

conveyors may be used to transport boxes approximately 400 mm wide x 1800 mm long x 200 mm deep (16 inches wide by 22 inches long by 8-1/2 inches deep). Box conveyors are suitable for transporting materials such as pharmaceuticals, sterile supplies, medical records, x-ray film and patient utensils. Conveyor systems are normally ratted at 8 boxes per minute. For large health facilities utilizing integrated materials handling methods, automatic loading an unloading cart lifts are considered more efficient than box conveyors.

a. The vertical element of a conveyor system will be equipped to load and unload automatically. The control stations will be capable of dispatching tote boxes to any landing or floor level in the building. Conveyors and branch lifts will be capable of transporting materials horizontally to remote stations.

b. Carrier tote boxes will be furnished with covers and will be coded to identify the type of material transported.

CHARACTERISTICS:	FACILITY TYPE:			
SIZE/HEIGHT OF BUILDING OR NUMBER OF BEDS OR NUMBER OF OUTPATIENT VISITS PER YEAR	TROOP AID CLINIC	MEDICAL AND OR DENTAL CLINIC	RESEARCH & GENERAL LAB BLDGS.	HOSPITAL
LESS THAN 4,640 GSM (50,000 GSF) OR 2 LEVELS OR LESS THAN 50 BEDS OR LESS THAN 15,000 OUTPATIENT VISITS/YR.	COMBINE ALL ELEVATORS	COMBINE ALL ELEVATORS	COMBINE ALL ELEVATORS	COMBINE ALL ELEVATORS
GREATER THAN 4,640 GSM (50,000 GSF) AND LESS THAN 9,2900 GSM (100,000 GSF) OR GREATER THAN 2 LEVELS OR GREATER THAN 50 BEDS AND LESS THAN 100 OR GREATER THAN 15,000 OUTPATIENT VISITS/YR AND LESS THAN 75,000 OUTPATIENT VISITS/YR.	NOT APPLICABLE	COMBINE ALL ELEVATORS OR SEPARATE PASSENGER AND SERVICE	COMBINE ALL ELEVATORS OR SEPARATE PASSENGER AND SERVICE	SEPARATE VISITOR/ OUTPATIENT TRAFFIC. SEPARATE INPATIENT/ LOGISTICS/ MATERIALS TRAFFIC.
GREATER THAN 9,290 GSM (100,000 GSF) AND LESS THAN 18,580 GSM (200,000 GSF) OR GREATER THAN 3 LEVELS OR GREATER THAN 100 BEDS AND LESS THAN 150 OR GREATER THAN 75,000 OUTPATIENT VISITS/YR AND LESS THAN 150,000 OUTPATIENT VISITS/YR.	NOT APPLICABLE	COMBINE ALL ELEVATORS OR SEPARATE PASSENGER AND SERVICE	SEPARATE PEDESTRIAN TRAFFIC. COMBINE LOGISTICS/ MATERIALS TRAFFIC.	SEPARATE VISITOR/ OUTPATIENT TRAFFIC. SEPARATE INPATIENT/ LOGISTICS/ MATERIALS TRAFFIC.
GREATER THAN 18,580 GSM (200,000 GSF) OR GREATER THAN 4 LEVELS OR GREATER THAN 150 BEDS OR GREATER THAN 150,000 OUTPATIENT VISITS/YR.	NOT APPLICABLE	SEPARATE VISITOR/ PATIENT TRAFFIC. SEPARATE LOGISTICS/ MATERIALS TRAFFIC.	SEPARATE PEDESTRIAN TRAFFIC. COMBINE LOGISTICS/ MATERIALS TRAFFIC.	SEPARATE VISITOR/ OUTPATIENT TRAFFIC. SEPARATE INPATIENT TRAFFIC. SEPARATE LOGISTICS/ MATERIALS TRAFFIC.

NOTES:

1. WAREHOUSES SHALL SEPARATE VISITOR TRAFFIC FROM ALL OTHER TRAFFIC.
2. WHERE A FACILITY MEETS CHARACTERISTICS IN MORE THAN ONE ROW, THE MORE SEVERE SEPARATION SHALL APPLY.

ELEVATOR TRAFFIC SEPERATION GUDE
FIGURE 17.1

FACILITY TYPE	PASSENGER CARS	COMBINE USE AND PATIENT SERVICE CARS	DEDICATED MATERIALS CARS (MANUAL SYSTEMS)
WAREHOUSE	LESS THAN 50 SECONDS	NOT APPLICABLE	LESS THAN 60 SECONDS
TROOP AID STATION	LESS THAN 45 SECONDS	LESS THAN 50 SECONDS	LESS THAN 60 SECONDS
MEDICAL AND OR DENTAL CLINIC	LESS THAN 40 SECONDS	LESS THAN 45 SECONDS	LESS THAN 55 SECONDS
RESEARCH LABS	LESS THAN 45 SECONDS	LESS THAN 50 SECONDS	LESS THAN 55 SECONDS
HOSPITALS	LESS THAN 35 SECONDS	LESS THAN 40 SECONDS	LESS THAN 50 SECONDS

AVERAGE INTERVAL PERFORMANCE STANDARDS
5 MINUTES OF HEAVY 2-WAY TRAFFIC
TYPICAL FACILITY
FIGURE 17.2

FACILITY TYPE	PERCENT OF ELEVATOR POPULATION HANDLED MINIMUM ACCEPTABLE, SEE NOTES 1 AND 2
WAREHOUSES, STAND ALONE	11%
TROOP AID STATION, STAND ALONE	12%
MEDICAL AND OR DENTAL CLINIC, STAND ALONE	13%
RESEARCH LAB BUILDINGS, STAND ALONE	13%
HOSPITALS, MEDICAL CENTERS	15%

NOTES FOR FIGURE 17.3:
1. WHERE COMBINED/INTEGRATED WITH ANOTHER FACILITY TYPE, THE HIGHER FACILITY CAPACITY SHALL BE MET.
2. WHERE MORE THAN ONE ELEVATOR GROUP EXISTS, A 10% (MINIMUM) MIGRATION FACTOR SHOULD BE INCLUDED FOR EACH GROUP.

PASSENGER HANDLING CAPACITY
5 MINUTES OF HEAVY 2-WAY TRAFFIC
TYPICAL FACILITY
FIGURE 17.3

FACILITY TYPE	AVERAGE MAXIMUM RIDE TIME
WAREHOUSES, STAND ALONE	LESS THAN 120 SECONDS, ALL TRAFFIC
TROOP AID STATION	LESS THAN 90 SECONDS, ALL TRAFFIC
MEDIAL AND OR DENTAL CLINIC, STAND ALONE	LESS THAN 90 SECONDS, ALL TRAFFIC
RESEARCH/LAB BUILDINGS, STAND ALONE	LESS THAN 90 SECONDS, ALL TRAFFIC
HOSPITALS, MEDICAL CENTERS	LESS THAN 90 SECONDS, PASSENGER/PATENT ELEVATORS LESS THAN 120 SECONDS, LOGISTICS ELEVATORS

AVERAGE MAXIMUM RIDE TIME
FIGURE 17.4

ELEVATOR RISE		SPEED M/S (FPM); FULL LOAD UP, NO LOAD DOWN; BY ELEVATOR TYPE		
STOPS	HEIGHT M (FT)	HYDRAULIC	GEARED	GEARLESS
2	< 4.6 (15)	.635 (125)	NOT APPLICABLE	NOT APPLICABLE
3	4.6 (15) TO 13.7 (45)	.635 (125 MIN.)	NOT APPLICABLE	NOT APPLICABLE
4 TO 7	< 27.4 (90)	NOT APPLICABLE	1.015 (200)	2.54 (500)
			1.780 (350)	
7 TO 17	27.4. (90) TO 54.9 (180)	NOT APPLICABLE	1.780 (350)	2.54 (500)
				3.56 (700)
> 17	> 54.9 (180)	NOT APPLICABLE	SEE NOTE 1	SEE NOTE 1

NOTES FOR TABLE 17.5:
1. CONSIDER SEPARATE HIGH RISE AND LOW RISE GROUPS OF PASSENGER CARS.

ELEVATOR TYPES AND SPEEDS
FIGURE 17.5

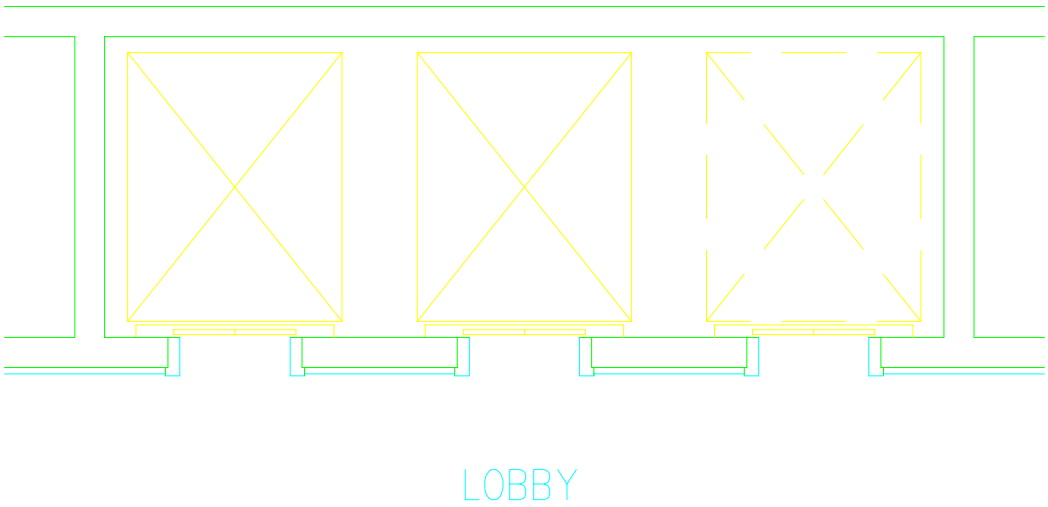

SERVICE CARS – IN LINE
FIGURE 17.6

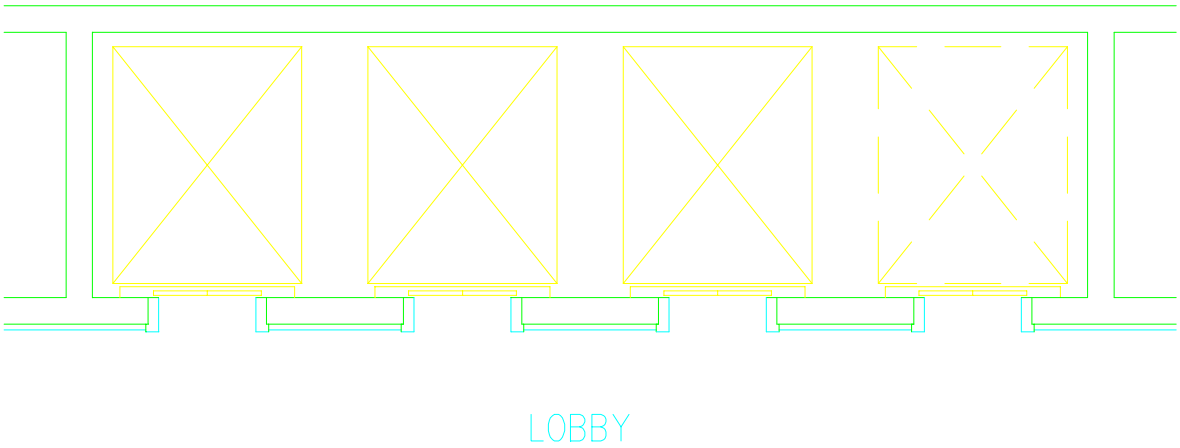

PASSENGER CARS – IN LINE
FIGURE 17.7

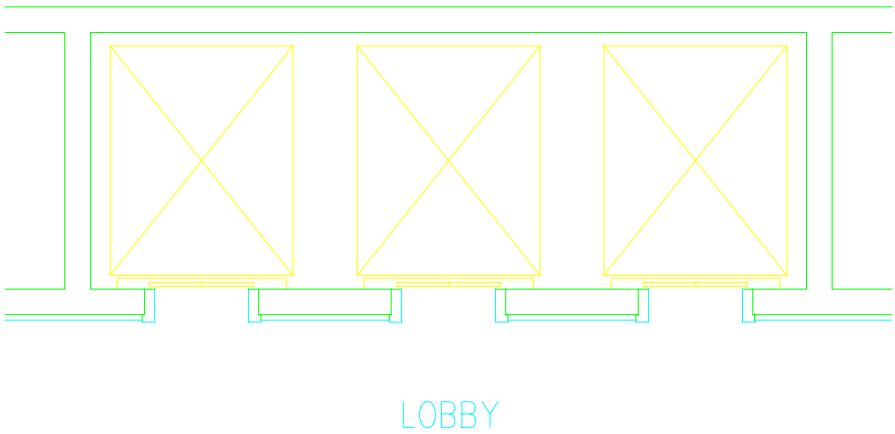

ADJACENT ENTRANCES – IN LINE
FIGURE 17.8

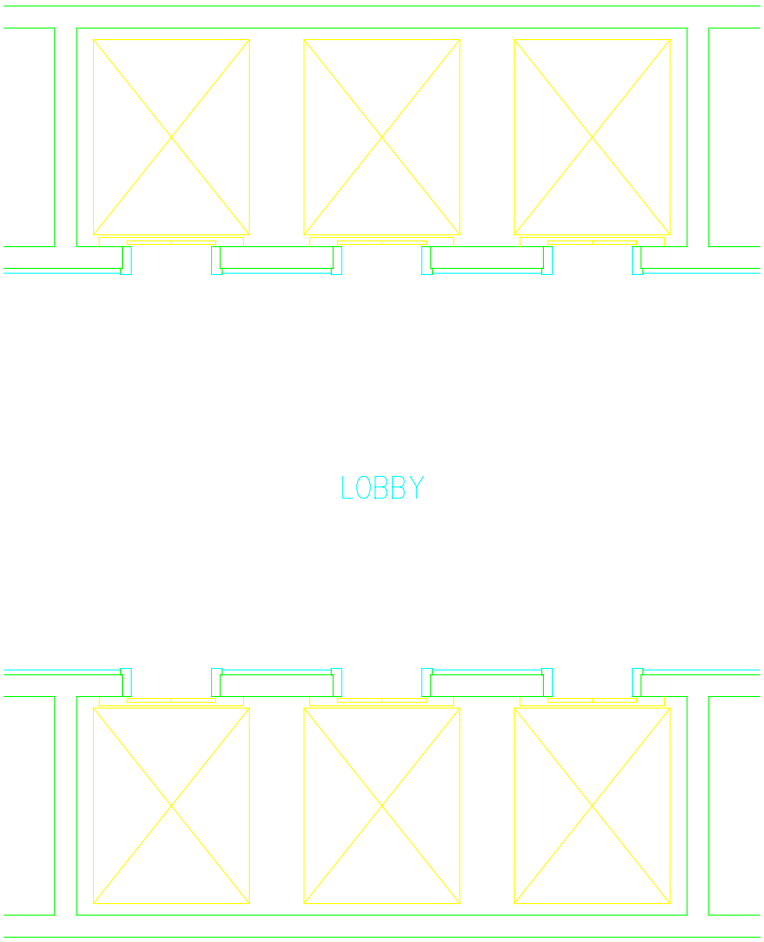

ADJACENT ENTRANCES – 180 DEGREES (OPPOSING)
FIGURE 17.9

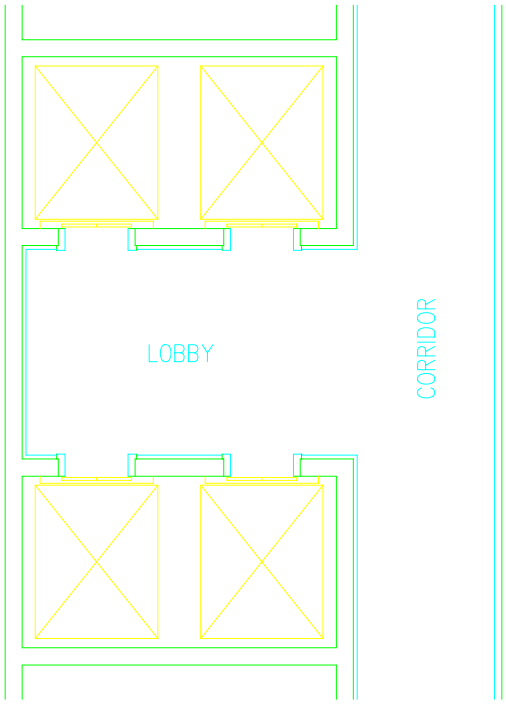

ELEVATOR WITH LOBBY ALCOVE
FIGURE 17.10

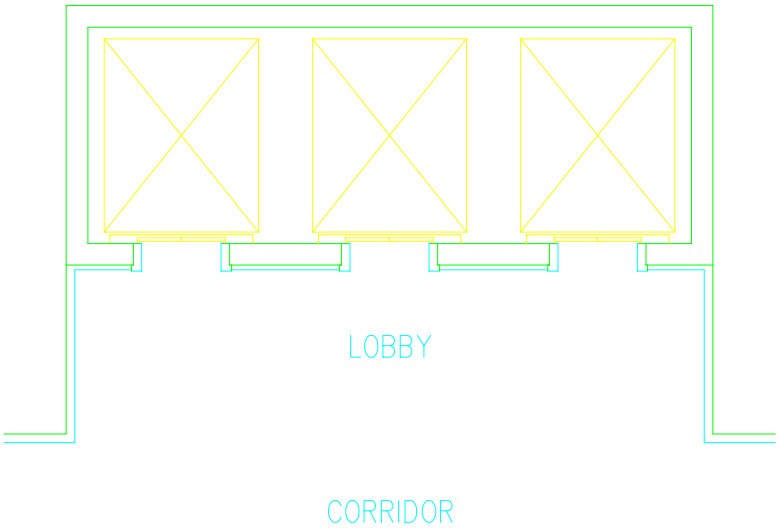

ELEVATOR WITH LOBBY SETBACK
FIGURE 17.11

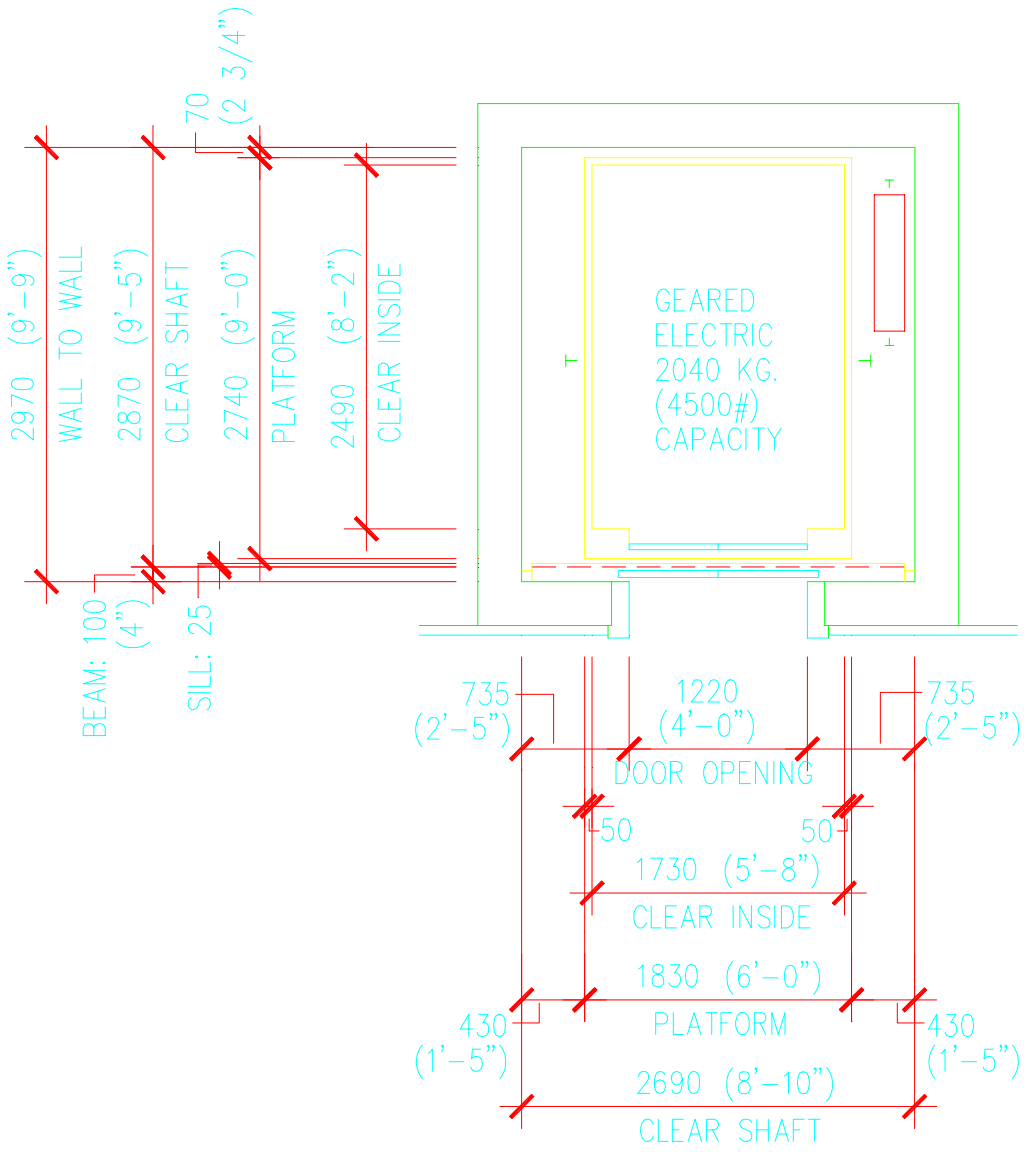

PASSENGER ELEVATOR – (NON SEISMIC)
FIGURE 17.12

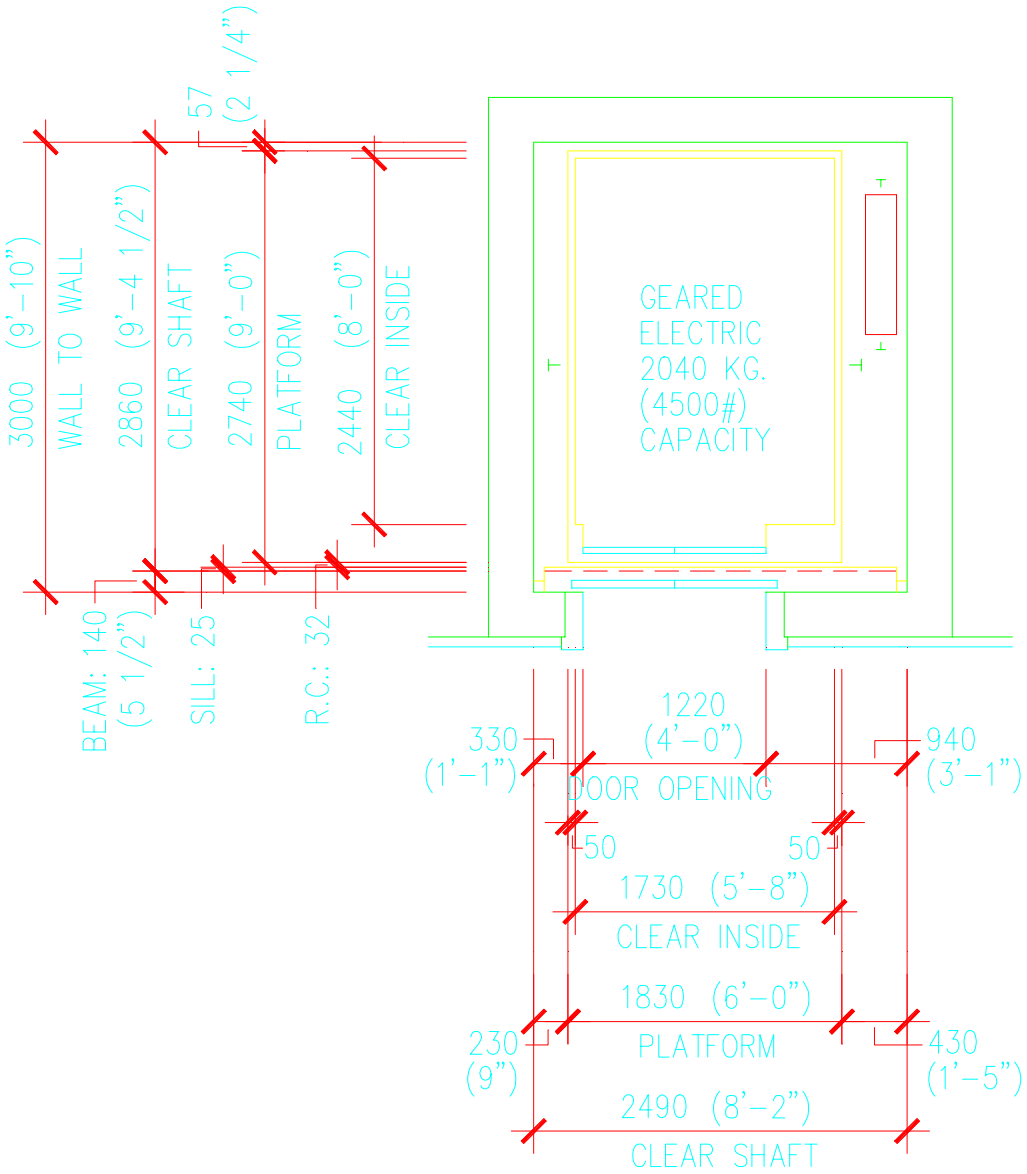

HOSPITAL SERVICE/PASSENGER ELEVATOR
WITH CENTER OPENING DOORS
(NON SEISMIC)
FIGURE 17.13

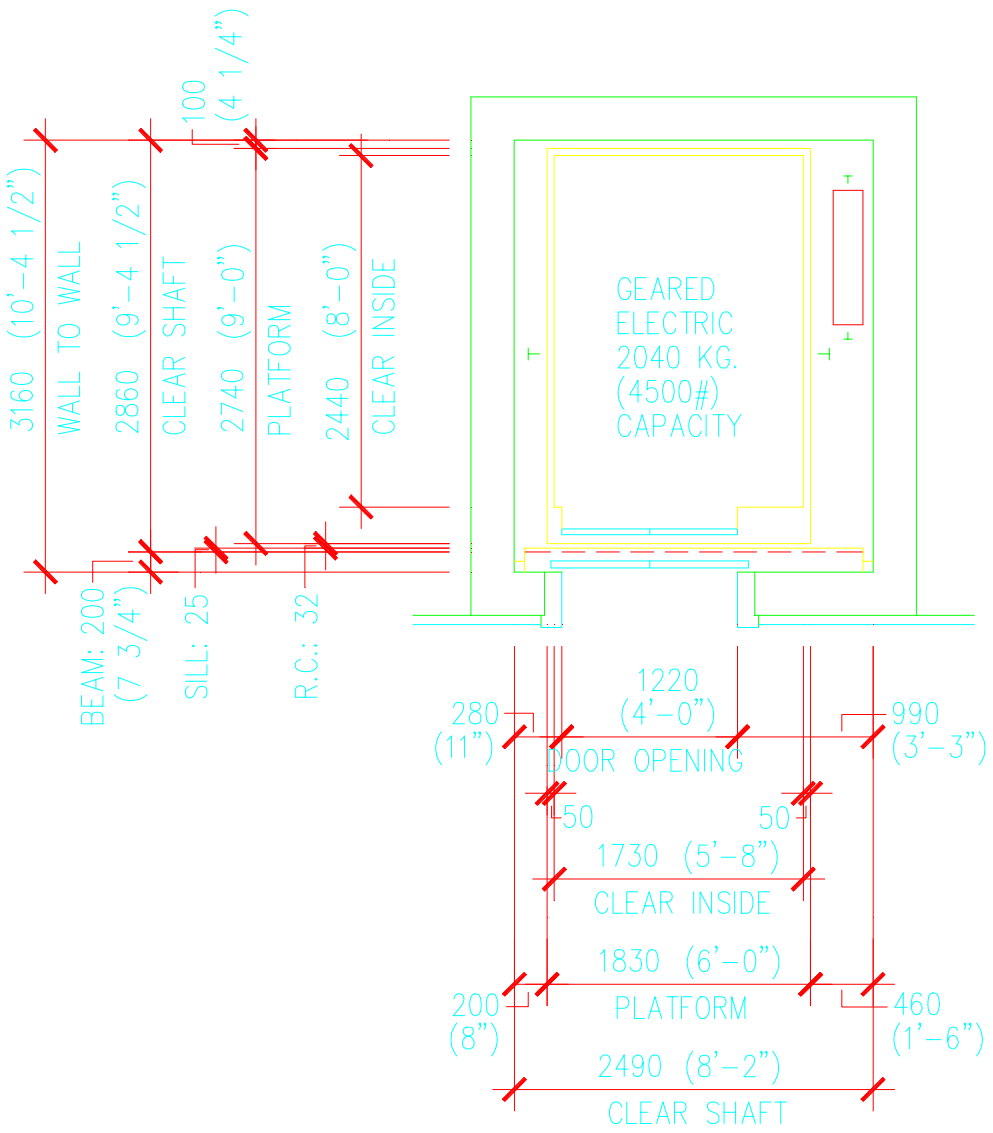

HOSPITAL SERVICE ELEVATOR
TWO SPEED SIDE OPENING DOORS
(NON SEISMIC)
FIGURE 17.14

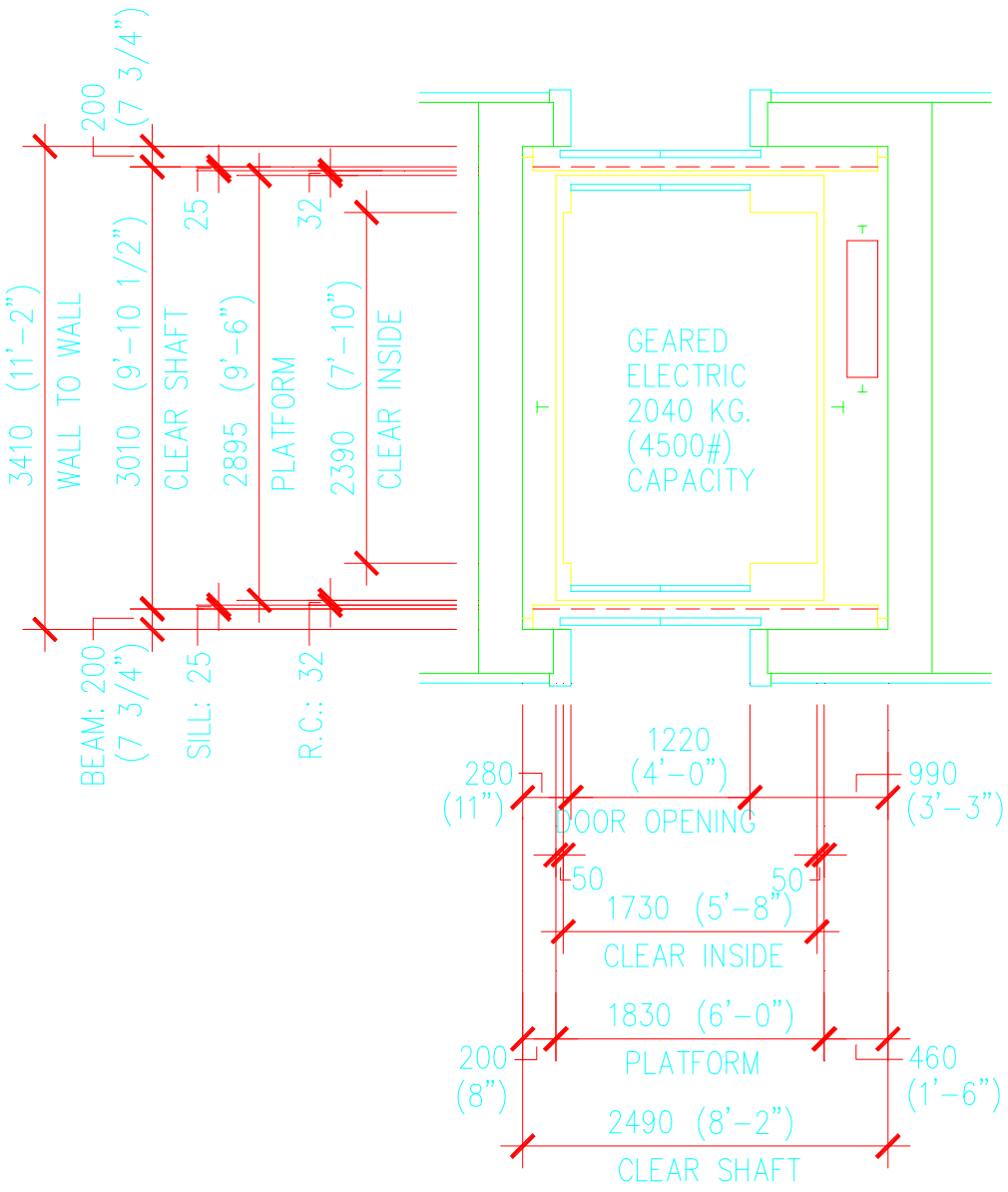

HOSPITAL COMBINATION PASSENGER AND SERVICE ELEVATOR
CENTER OPENING DOORS, FRONT AND REAR
(NON SEISMIC)
FIGURE 17.15

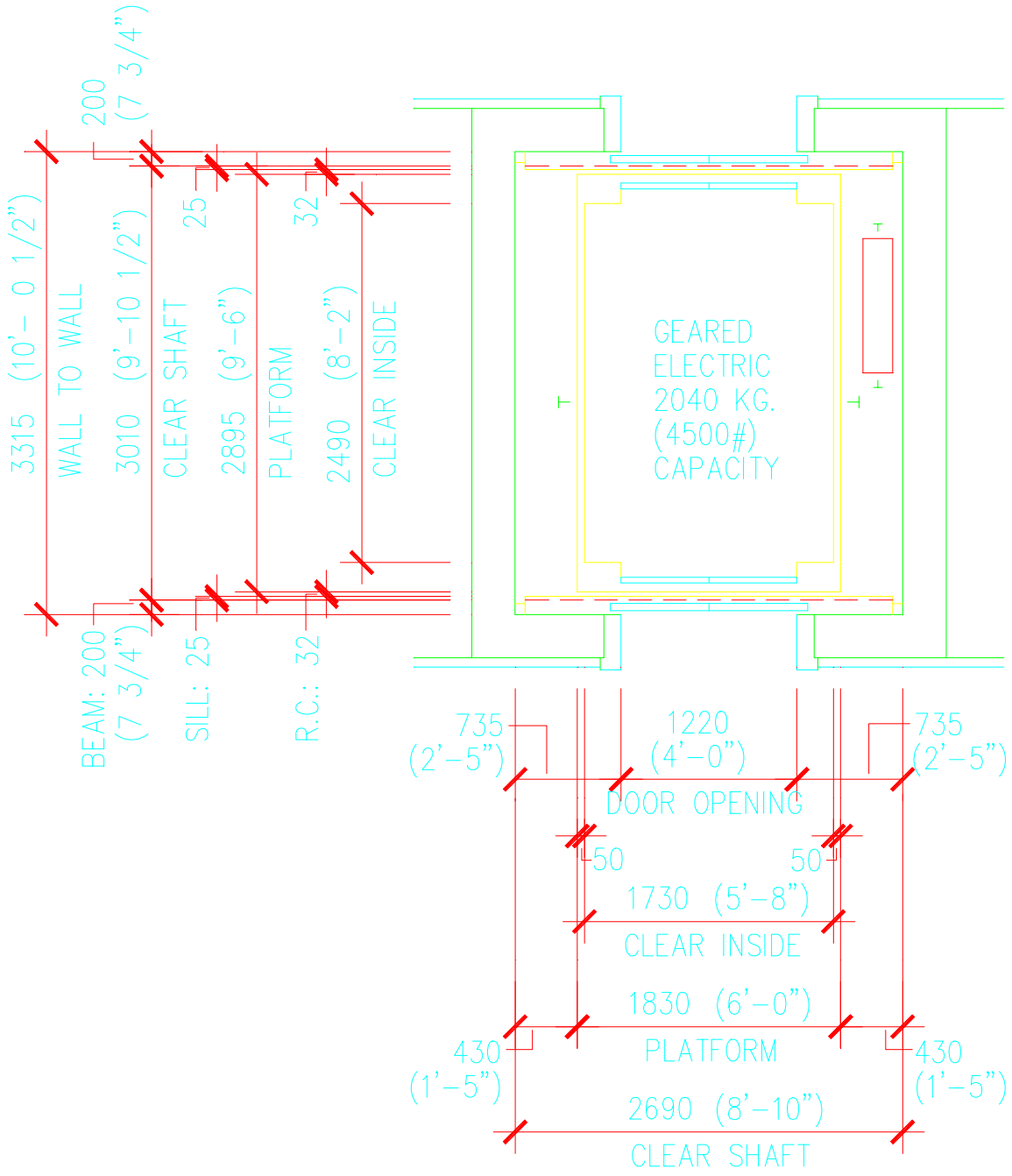

HOSPITAL COMBINATION PASSENGER
AND SERVICE ELEVATOR
CENTER OPENING DOORS,
FRONT AND REAR
(NON-SEISMIC)
FIGURE 17.16

CHARACTERISTICS:	FACILITY TYPE:			
SIZE/HEIGHT OF BUILDING OR NUMBER OF BEDS OR NUMBER OF OUTPATIENT VISITS PER YEAR	TROOP AID CLINIC	DENTAL/ OUTPATIENT CLINIC	RESEARCH & GENERAL LAB BLDGS.	HOSPITAL
LESS THAN 4,640 GSM (50,000 GSF) OR 2 LEVELS OR LESS THAN 50 BEDS OR LESS THAN 15,000 OUTPATIENT VISITS/YR.	NO STUDY REQUIRED.	NO STUDY REQUIRED.	NO STUDY REQUIRED. MANUAL DUMBWAITER.	NO STUDY REQUIRED. MANUAL DUMBWAITER.
GREATER THAN 4,640 GSM (50,000 GSF) AND LESS THAN 9,2900 GSM (100,000 GSF) OR GREATER THAN 2 LEVELS OR GREATER THAN 50 BEDS AND LESS THAN 100 OR GREATER THAN 15,000 OUTPATIENT VISITS/YR AND LESS THAN 75,000 OUTPATIENT VISITS/YR.	NOT APPLICABLE	NO STUDY REQUIRED. MANUAL DUMBWAITER.	NO STUDY REQUIRED. MANUAL DUMBWAITER. PNEUMATIC TUBE - INJECT/EJECT.	STUDY TWO ALTERNATES. MANUAL DUMBWAITER. PNEUMATIC TUBE - INJECT/EJECT. GRAV. CHUTES
GREATER THAN 9,290 GSM (100,000 GSF) AND LESS THAN 18,580 GSM (200,000 GSF) OR GREATER THAN 3 LEVELS OR GREATER THAN 100 BEDS AND LESS THAN 150 OR GREATER THAN 75,000 OUTPATIENT VISITS/YR AND LESS THAN 150,000 OUTPATIENT VISITS/YR.	NOT APPLICABLE	STUDY TWO ALTERNATES. MANUAL DUMBWAITER. PNEUMATIC TUBE - INJECT/EJECT.	STUDY TWO ALTERNATES. MANUAL DUMBWAITER. PNEUMATIC TUBE - INJECT/EJECT.	STUDY THREE ALTERNATES. MANUAL DUMBWAITER. PNEUMATIC TUBE - INJECT/EJECT. AUTO CART LIFT GRAVITY CHUTE
GREATER THAN 18,580 GSM (200,000 GSF) AND LESS THAN 32,520 GSM (350,000 GSF) OR GREATER THAN 4 LEVELS OR GREATER THAN 150 BEDS AND LESS THAN 250 OR GREATER THAN 150,000 OUTPATIENT VISITS/YR. AND LESS THAN 300,000 OUTPATIENT VISITS/YR.	NOT APPLICABLE	STUDY TWO ALTERNATES. MANUAL DUMBWAITER. PNEUMATIC TUBE - INJECT/EJECT. AUTO CART LIFT AUTO BOX CONVEYOR GRAVITY CHUTE	STUDY TWO ALTERNATES. MANUAL DUMBWAITER. PNEUMATIC TUBE - INJECT/EJECT. AUTO CART LIFT AUTO BOX CONVEYOR GRAVITY CHUTE	STUDY THREE ALTERNATES. MANUAL DUMBWAITER. PNEUMATIC TUBE - INJECT/EJECT. AUTO CART LIFT AUTO BOX CONVEYOR GRAVITY CHUTE PNEUM. TRASH/LINEN

MATERIALS HANDLING SYSTEM ALTERNATIVE MATRIX
FIGURE 17.17
(CONTINUED NEXT PAGE)

CHARACTERISTICS:	FACILITY TYPE:			
SIZE/HEIGHT OF BUILDING OR NUMBER OF BEDS OR NUMBER OF OUTPATIENT VISITS PER YEAR	TROOP AID CLINIC	DENTAL/ OUTPATIENT CLINIC	RESEARCH & GENERAL LAB BLDGS.	HOSPITAL
GREATER THAN 32,520 GSM (350,000 GSF) OR GREATER THAN 6 LEVELS OR GREATER THAN 250 BEDS OR GREATER THAN 300,000 OUTPATIENT VISITS/YR.	NOT APPLICABLE	STUDY THREE ALTERNATES. MANUAL DUMBWAITER. PNEUMATIC TUBE - INJECT/EJECT. AUTO CART LIFT AUTO BOX CONVEYOR GRAVITY CHUTE PNEUM. TRASH/LINEN AUTO GUIDED VEHICLE	STUDY THREE ALTERNATES. MANUAL DUMBWAITER. PNEUMATIC TUBE - INJECT/EJECT. AUTO CART LIFT AUTO BOX CONVEYOR GRAVITY CHUTE PNEUM. TRASH/LINEN AUTO GUIDED VEHICLE	STUDY THREE ALTERNATES. MANUAL DUMBWAITER. PNEUMATIC TUBE - INJECT/EJECT. AUTO CART LIFT AUTO BOX CONVEYOR GRAVITY CHUTE PNEUM. TRASH/LINEN AUTO GUIDED VEHICLE

NOTES:
1. WAREHOUSES SHALL BE STUDIED FOR APPLICABLE EQUIPMENT AND FOR EXTENSIONS OF SYSTEMS FROM ADJACENT FACILITIES.
2. OTHER SYSTEMS MAY BE STUDIED WHERE APPROPRIATE.

MATERIALS HANDLING SYSTEM ALTERNATIVE MATRIX
FIGURE 17.17

REFERENCES

17a. ASME A17.1, "Safety Code for Elevators and Escalators".

17b. ASME A17.2.1, A17.2.2, A17.2.3, "Inspectors Manuals".

17c. ASME A17.3, "Safety Code for Existing Elevators and Escalators".

17d. ASME A17.5, "Elevator and Escalator Electrical Equipment".

17e. NFPA 82, "Standard on Incinerators and Waste and Linen Handling Systems and Equipment".

SECTION 18 - WASTE MANAGEMENT

18.1 INTRODUCTION. This section addresses the waste generated at DOD medical facilities, and establishes design guidance for the collection, transportation, holding, disposal, and treatment of these wastes. Wastes not addressed by this section include asbestos, nuclear, and water-borne (sanitary) wastes. This section discusses, but does not provide complete facility design guidance for, soiled reprocessable materials, such as linens, uniforms, etc..

18.1.1 Regulations, Codes, and Standards. The design of the waste management system shall be in accordance with the Federal regulations listed in the references (18a through 18g) at the end of this section. In addition, the design shall be in accordance with State and local government regulations. Guidelines and advisory standards available from the National Fire Protection Agency (NFPA), the Centers for Disease Control (CDC), National Institute for Occupational Safety and Health, (NIOSH), Department of Health and Human Services (HHS), and the Joint Commission on Accreditation of Healthcare Organizations (JCAHO), shall be utilized as applicable and considered minimum criteria for facility design. Specific publications of these agencies are cited periodically throughout this text to emphasize applicability.

18.1.2 Waste Categories. Each of the several categories of medical facility waste requires individual design consideration of handling, storage, and disposal by the facility. In addition, regulatory requirements differ for each category, dependant upon the relative personnel and public hazards and environmental impact.

18.1.2.1 Non-regulated Medical Waste (NRMW). This waste category includes those wastes not classified as Regulated Medical Waste (RMW), Recyclable Materials (RM), or Hazardous Waste (HW). NRMW normally constitutes no special danger of infection or injury to personnel or the general public.

18.1.2.2 Regulated Medical Waste (RMW). RMW is waste which poses danger of disease transmission and/or objectionable appearances to the public and handling personnel, and includes the following, as defined by reference 18a:

a) Cultures/Stocks of Infectious Agents;
b) Pathological Wastes;
c) Human Blood and Blood Products;
d) Used Sharp implements;
e) Contaminated Animal Wastes and Bedding;
f) Isolation Waste from Patients with Highly Communicable Diseases;
g) Unused sharp implements;
h) Human surgery specimens or tissues removed at surgery or autopsy.
i) Used, absorbent materials saturated with blood, blood products, body fluids, or excretions or secretions contaminated with visible blood; and absorbent materials saturated with blood or blood products that have dried (“band aid” type dressings are normally not included in this category).
j) Non-absorbent, disposable devices that have been contaminated with blood, body fluids or, excretions or secretions visibly contaminated with blood, but have not been treated by an approved method.
k) Other Wastes mixed in with the above.

18.1.2.3 Recyclable Materials (RM). RM are those used materials which can be reused, either for the same purpose as the original material or, following processing, in a different form or for a different purpose. RM normally constituted no special danger of infection or injury to personnel or the general public.

18.1.2.4 Hazardous Waste (HW). HW is defined by the Resource Conservation and Recovery Act (RCRA), Subpart C (and categories not de-listed at Subpart D), contained at 42 USC 6973, 40 CFR 261-265 (reference 18b), and constitutes wastes having ignitable, corrosive, reactive, or toxic characteristics.

18.2 GENERAL DESIGN REQUIREMENTS. The proper design of a medical facility waste management and handling system requires consideration of the operational and mission characteristics of the facilities, the existing waste disposal practices of the facility or base/post, the governmental regulations affecting the design, and the costs and application of system handling and disposal technologies. It is the designer's responsibility to identify the characteristics and volumes of facility-generated wastes and to design the facilities necessary for collection, holding, segregation, and ultimate disposal of the wastes. The waste management system shall be designed to help maintain aseptic environments in the hospital, and to minimize or eliminate physical and infection hazards to patients, hospital staff, and the general public, at the lowest reasonable cost to the government.

18.2.1 Waste Management Study (WMS). A WMS shall be executed for each facility design. The study shall constitute the design project documentation of all considerations and conclusions of the waste system design. In addition to a narrative description of the proposed waste management methodology, the study shall include the following:

(a) Determination of the waste stream components and soiled linen types.
(b) Estimation of waste and soiled linen volumes.
(c) Concepts for segregation, holding at the generating departments and central bulk holding.
(d) Space and utility requirements for departmental holding rooms.
(e) Concepts for the collection and transportation of the waste and soiled materials through the facility.
(f) Soiled dock arrangement, layout, and equipment.
(g) Waste Management Center (WMC) space, layout, equipment, and support utility requirements.
(h) Concepts for the disposal of each waste category.
(i) Life Cycle Costing (LCC) Studies for RMW processing equipment.
(j) Aspects of RMW processing; operation and maintenance, safety, infection control.

18.3 WASTE MANAGEMENT SYSTEM FACILITY SPACE REQUIREMENTS.

18.3.1 Departmental Solid Waste Holding. Each category of waste, and soiled materials, shall be held separately from clean materials and segregated to prevent cross-contamination. The design shall determine the space requirements for holding areas at the generating department level. Space requirements for holding rooms shall take into account the necessary space for personnel and cart circulation, the categories and volumes of wastes and soiled materials generated on the individual departmental basis, and the schedule of removal.

18.3.1.2 RM Segregation. RM shall be segregated at the generating source. Appropriate space for RM holding containers in patient rooms, clinical unit nursing stations, offices, ancillary areas and support departments is required.

18.3.1.3 Collection Schedule. Design of the waste and soiled linen systems shall be based upon the completion of all collection tasks within one (1) working shift of eight (8) hours for offices, clinics and ancillary areas,

unless other schedule is justified by analysis in conjunction with the Transportation Study addressed at Section 17 of this manual.

18.3.1.4 Typical Nursing Unit Soiled Utility Room. For the general 28 to 36 bed nursing units, a typical soiled utility room will require approximately 18.6 net square meters (200 net ft) in floor area. This typical soiled utility room is shown at Figure 18.1.

18.3.2 Waste Management Center. For hospitals, medical centers, and other facilities generating significant volumes of RMW and/or HW, a centralized Waste Management Center (WMC) should be provided for the facility. The WMC is designed for bulk waste and soiled materials holding and dispatch, and for RMW processing. Provision of a central WMC helps to ensure necessary control over facility waste, and facilitates future changes in waste compositions and volumes which impact space requirements. Bulk holding in the WMC is normally provided for NRMW, RMW, RM, and soiled linen.

18.3.2.1 Holding Capacity. A minimum of three (3) days holding capacity for all waste/soiled materials shall be provided in the WMC, to provide for operational contingencies, such as holiday weekends. Remote facilities, or those with special mission requirements, may require greater holding capacity. Special requirements applicable to HW are addressed elsewhere in this manual.

18.3.2.2 Staff/Administration Space. WMC staff and administrative facilities will be required within or proximate to the WMC.

18.3.2.3 Clean Cart Holding. Holding space shall be provided in the WMC for clean cart holding. Space requirements will be determined in coordination with the Transport Study, which will identify the number and frequency of use of the various cart types. A minimum holding of one (1) hour is required for each separate cart type.

18.3.2.4 Soiled Cart Holding and Cleaning. When in-house RMW processing is required, space shall be provided in the WMC for soiled cart holding, segregated from holding space for clean carts or materials. A cart cleaning station shall also be provided at the WMC, consisting of an automated cart washer or steam gun in a manual cart wash room.

18.3.2.5 Secured Holding. Secured holding with restricted access, designed to meet the requirements of the Resource Conservation and Recovery Act (reference 18a) should be provided for HW. Similarly, a separate secured holding area should be provided for RMW.

18.3.2.6 Emergency Shower and Eyewash. An overhead shower and eye wash station should be provided for employee use in the WMC in the event of contamination by HW or RMW.

18.3.2.7 RMW Processing Equipment. On-site RMW processing equipment is normally located in the WMC.

18.3.3 Soiled Dock Design. Soiled docks shall not be used for clean materials receiving or dispatch. The required number of soiled docks shall be determined for each facility. However, the following minimum soiled dock positions are required:

a) One (1) dock position for dispatch of soiled linen, RMW (off-site treated), RM, and HW,
b) One (1) position for the NRMW compactor or roll-off container.
c) One (1) position for the container for treated RMW.
d) One (1) salvage/large item dumpster at or near the soiled dock.

18.3.3.1 Dimensions and Arrangement. The dock height, depth and apron are determined by the WMS, based upon such considerations as soiled dock activities, truck types and dimensions, and cart and personnel movement and circulation.

18.3.3.2 Personnel Access. Appropriate stairs and ramps shall be required to facilitate personnel movement, including accessibility requirements (see Section 12), between the dock and the ground level.

18.3.3.3 Weather Protection. In locations of intemperate climate, ie., high wind, or temperature extremes, enclosed docks are required. In other areas where an outside dock is adequate, a protective canopy shall be provided to shield personnel and materials from rain or snow.

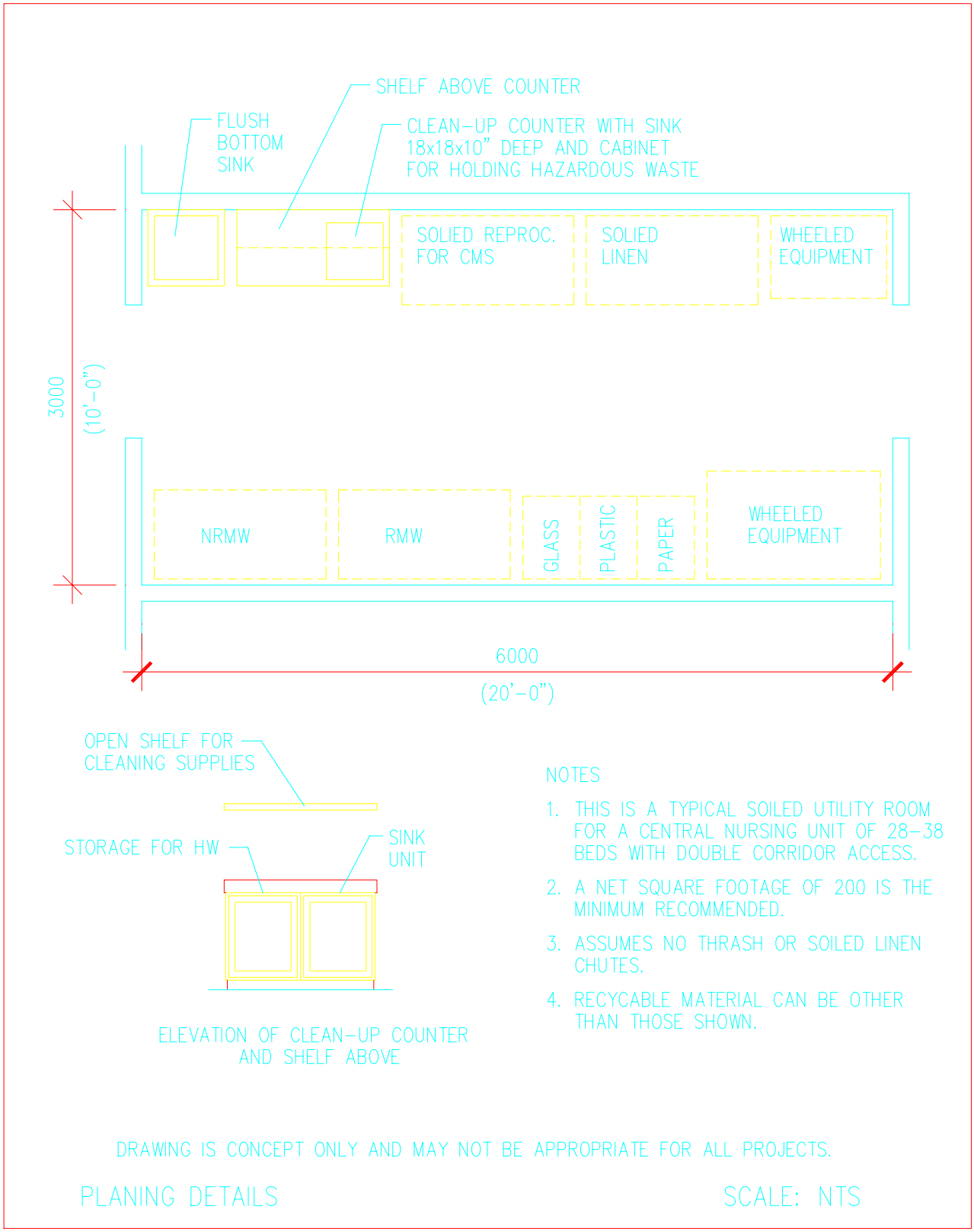

TYPICAL SOILED UTILITY ROOM FOR A GENERAL NURSING UNIT
Figure 18-1

18.4 WASTE COLLECTION AND TRANSPORT. The waste management design shall be fully coordinated with the transportation design to determine the most appropriate means and routing of transport of wastes within the facility. Automatic or manual systems may be considered. The design shall avoid creating conditions which require or involve the double handling of waste, especially RMW and HW.

18.4.1 Vertical Collection Systems. The extent of use of vertical collection for the movement of soiled linens and NRMW shall be determined in coordination with the transportation design, addressed in Section 17. Vertical collection elements include:

a) Gravity Chutes;
b) Pneumatic Chutes;
c) Conveyors and
d) Elevators.

18.4.2 Restricted Movement Routes. Hospital wastes and soiled materials movement routes shall be designed to avoid public areas and contact with patients.

18.4.3 Containment and Labeling. HW and RMW will be collected in enclosed, leak-proof containers (or bags), properly labeled to identify the nature of the materials. Management of HW shall comply with the RCRA.

18.4.4 Restricted Transport Systems. Chute systems shall not be used for RMW, RM, and HW: these wastes are moved by cart. Liquid borne shredded-waste (NRMW), and institutional vacuum systems, are not recommended.

18.4.5 Manual Collection Methods. Manual collection of waste and soiled materials is generally accomplished by cart. The cart design should be compatible with automatic cart dumping, cart washing and RMW processing equipment (if utilized). Additional guidance for the design of waste transport systems and methodology is provided at Section 17.

18.5 NRMW PROCESSING AND DISPOSAL. The design shall coordinate processing and disposal of NRMW with the existing procedures of the base/post. Waste compaction should be considered to determine cost feasibility.

18.5.1 Automatic Cart Dumper. If NRMW is delivered to the WMC by cart, an automatic cart dumper should be provided to transfer the waste into the holding container or compactor.

18.5.2 Collection Hopper(s). For systems utilizing chutes for transport of NRMW to the WMC, collection hoppers should be provided to load the waste automatically into the holding container or compactor.

18.5.3 Compaction. Compaction is used in conjunction with roll-off containers and the equipment must be compatible with the soiled dock design. Where a separate compactor and container system arrangement is planned, under-dock installations should be used. Compactor location must be compatible with the dock traffic patterns, transporter access, and suitable for physical protection. Compacted NRMW is normally disposed of off-site.

18.5.4 Waste Grinders. Grinders should be provided in Food Service areas, including dish washing, pots/pans washing and food preparation areas. Grinder size will be based upon the maximum number of meals possible at full occupancy. Grinders shall not be used in Obstetrical Suites.

18.5.5 Pulping and Shredding Systems. A pulping/shredding system is normally provided for Food Service Department waste. Food Service waste

includes food preparation waste, packing materials, tray scrapings, paper and plastic plates and containers, trays and utensils, not economically or practically processable as RW. Pulped waste shall not be piped to a remote disposal location, but pulped directly into containers visible to the pulping machine operator. Central systems for general facility NRMW are not normally provided, but may be considered for Using Military Department approval if cost justified.

18.5.6 Incineration. On August 15, 1997, The EPA Administrator final standards and guidelines, CFR 40 Part 60, to reduce air pollution from incinerators that are used to burn medical/infectious waste (MWI) by 75 to 98 percent of levels existing at that time. These final standards supply to “existing MWI’s” built before June 20, 1996 and “new MWI’s” built after June 20, 1996. Additionally, these final guidelines are for use by States in developing plans to reduce air pollution from new and existing MWI’s and are only minimum standards. These revised guidelines mean that any new incinerators will probably be built by large commercial concerns or regional hospital systems, and not individual healthcare institutions.

18.6 RMW PROCESSING. Selection of a treatment or disposal process for a particular location requires careful consideration of current installation practices (as applicable), Federal, State, and Local governmental regulations, and the relative costs, operational complexities, and legal implications associated with the available disposal options. The majority of DOD medical facilities utilize contractor treatment and disposal of RMW, due to economic considerations (including maintenance costs) and uncertainties in local laws or landfill acceptance policies. On-site processing of RMW should be considered only following careful consideration of local regulations, landfill policies for the acceptance of treated RMW, the operating and maintenance costs associated with RMW processing equipment, and the availability and cost of contractor services.

18.6.1 Landfill Acceptance of RMW. The designer shall verify that the community landfill(s) will accept RMW, whether treated or in untreated form, and any requirements for its acceptance. See Appendix 18.1 for additional information regarding off-site/contractor disposal.

18.6.2 Off-site Disposal/Treatment Considerations. The Environmental Protection Agency's Medical Waste Tracking Act (MWTA) (reference 18a), while presently expired, introduced a system imposing extensive responsibilities on RMW generators (i.e., hospitals) for the ultimate disposal of RMW, whether by the facility itself or by independent hauling and treatment contractors. It should be anticipated that the majority of State governments have or will institute regulations at least as stringent as the MWTA. In addition to the legal liability implications of waste tracking legislation, the costs and operational complexities associated with contracted disposal will be significant, requiring consideration in cost analysis comparisons with on-site treatment methods. The MWTA was allowed to lapse, although States continue to use it as a minimum guideline to track medical waste.

18.6.2.1 Pathological Waste Disposal. Where other procedures for disposal of human or animal body parts are not feasible or cost effective, off-site pathological waste disposal (incineration or burial) by outside contract with mortician or veterinarian should be considered.

18.6.3 General On-site Treatment Considerations. On-site treatment of RMW is desirable to reduce the potential liability associated with transport of potentially infectious materials and increasingly higher costs for contracted transport and disposal of untreated RMW. Acceptable treatment methods are as defined by the MTWA, requiring waste "treatment and destruction", and renderment to unrecognizability (normally accomplished by

shredding or grinding). The treatment process is required to destroy the potential of the waste to cause adverse human health effects, to pose physical hazards, or to aesthetically degrade the environment.

18.6.4 Treatment Method Selection Guidance. There are significant comparative advantages and disadvantages for each of the RMW treatment currently available in the industry. Waste management and handling regulations have currently not stabilized to the point that a single treatment technique can be recommended to meet the needs of all projects. Table 18.1 outlines technologies which are currently considered effective for on-site RMW treatment. Note that processes used by centralized or commercial facilities, such as irradiation and thermal inactivation treatments for large volumes of liquid and solid RMW, are not presented here.

18.6.4.1 Shredding and Grinding Equipment. In and of themselves, shredding or grinding processes do not constitute treatment methods. Shredding or grinding equipment must be used in a manner which does not introduce aerosolized untreated RMW into the air, and complies with OSHA and EPA regulations for employee health and safety.

18.6.5 Retort Steam Sterilization. Retort steam sterilization is a common method of treating RMW by use of saturated steam under pressure to accomplish the complete destruction of all microorganisms. Use of a retort steam sterilizer, in concert with a grinder for rendering the treated RMW "unrecognizable", makes this process viable in the anticipated regulatory climate. Grinding should be done following sterilization, in conjunction with a compactor or container located at the soiled dock.

18.6.5.1 Limitations of Method. Aesthetic considerations, and the dense nature of human and animal body parts which preclude thorough steam penetration, make sterilization ineffective for this application. Similarly, sterilization cannot be effectively utilized for large volumes of liquids, or animal bedding.

18.6.5.2 Sterilizer Type. Vacuum sterilizers process RMW more effectively, and in less time, than gravity displacement units, and should be utilized for this application.

18.6.5.3 Mechanical Cart Dumper. Systems which employ a mechanical cart dumper to transfer bagged RMW from the holding cart to the sterilizing cart, or use the same cart for collecting, holding and sterilizing RMW, should be utilized to reduce the potential for injury or contamination of waste handling personnel.

18.6.6 Incineration. Incineration was a primary method used to treat and destroy RMW in past years when the plastics content of the waste was low. Higher air quality standards and increased public concerns regarding air emissions have resulted in difficulties with permitting and operation of incinerators, as well as increasing capital and operational costs substantially. On-site incineration should not be considered.

18.6.7 Microwaving of RMW. This is accomplished by a technique which shreds the waste and uses magnetrons, or microwave generators, to produce heat. Microwaving is not suitable for treatment of large pathological wastes, such as body parts and animal wastes. In addition, the technology is currently restricted to treatment of RMW which is less than 10% liquid content by total weight, and metallic content of less than 1% by total weight (with no piece of metal exceeding a weight of 0.5 lb). Advantages of microwaving systems are their effective destruction of RMW and reduction of waste volume by 80 percent.

18.6.8 Chemical Disinfection. Chemical disinfection of RMW is generally accomplished by a technique which uses shredding and a sodium hypochlorite solution to chemically alter and destroy microorganisms. Shredding occurs within the unit, therefore precluding the need for a separate shredding or grinding device. Chemical disinfection is not suitable for treatment of large pathological wastes, such as body parts and animal waste. This technology will typically reduce waste volume by 80 percent.

18.6.9 Liquid RMW Disposal. Discharge to the sanitary sewer is a common practice for disposal for liquid RMW, such as blood and suction fluids. This practice should specifically be reviewed for code acceptability at the time the medical facility is expected to be operational.

18.6.10 New RMW Treatment Technology. Any "new" treatment technologies considered for utilization in facilities shall be acceptable by the regulating authority, have scientific evidence of efficacy, and shall have been successfully in use in similar applications for a minimum of two years.

8.7 SPECIAL REQUIREMENTS FOR HAZARDOUS WASTE. All HW must be contained, identified, stored, and disposed of in accordance with reference 18b.

18.7.1 Holding (Accumulation) Quantities. The volume of HW which a facility may hold is determined by the "Generator Status" of the facility, as defined by the EPA. More stringent State or Local regulations may apply. See Appendix 18.2 for additional information regarding Federal/State guidelines.

18.7.1.1 Large Quantity Generators. Large Quantity Generators produce over 1,000 kg (2,200 lb) of HW per month, or five and a half (5.5) 55 gallon drums. Additionally, if more than 1.1 kg/month (2.5 lb/month) of any "acutely hazardous waste" is generated, the facility is classified under this category. HW storage can not be longer than 90 days from the accumulation start date (normally when the container is full), without a permit. A Large Quantity Generator can have multiple satellite accumulation points at the work place for one (1) container, up to the maximum size of a 55 gallon drum.

18.7.1.2 Small Quantity Generators. Small Quantity Generators produce from 100 - 1000 kg (220 - 2,200 lb) per month. HW storage can not be longer than 180 days from the accumulation start date (normally when the container is full), without a permit. If the disposal facility is located more than 322 km (200 mi) away, HW can be accumulated for 270 days.

18.7.1.3 Conditionally Exempt Small Quantity Generators. Conditionally Exempt Small Quantity Generators produce less than 100 kg (220 lb) of HW/month.

18.7.2 HW Container Requirements. HW must be placed into compatible containers which are sealed at all times except when additional amounts of HW are being introduced. HW containers shall be properly labeled. Stacking of HW containers is allowed only if adequate means are provided to prevent spills or damage to the containers: appropriate secondary containment capability is required.

TECHNIQUES FOR TREATMENT OF REGULATED MEDICAL WASTE			
Types of RMW	Retort Sterilization	Microwave	Chemical Disinfection
Isolations Wastes	Yes	Yes	Yes
Cultures & Stocks Of Infectious Agents & Associated Biologicals	Yes	Yes	Yes
Human Blood & Blood Products	Yes	Yes (4)	Yes
Pathological Waste	Yes (2)		
Used/Unused Sharps	Yes	Yes	Yes
Contaminated Animal Carcasses, Body Parts & Bedding			
Other Wastes Mixed In With RMW	Yes	Yes	Yes

1. Discharge to sanitary sewer for treatment in municipal sewerage system provided that the secondary treatment is available.

2. For aesthetic reasons, steam sterilization should be followed by incineration of the treated waste or by grinding, in accordance with the National, State and Community regulations.

3. Handling by a mortician (burial or cremation.

4. Limited to 10% moisture by weight and 1% metallic content by weight.

TABLE 18.1 TECHNIQUES FOR TREATMENT OF RMW

REFERENCES:

18a Environmental Protection Agency (EPA) Regulation 40 CFR 261-265 implementing the Resource Conservation and Recovery Act (RCRA), 42 USC 6973.

18b EPA Regulation 40 CFR Parts 22 and 259, the Medical Waste Tracking Act.

18c Department of Transportation (DOT) Regulation 49 CFR 171-181, Hazardous Materials Transportation.

18d DOT Regulation 49 CFR 173.386, The Etiologic Waste Act (EWA).

18e Occupational Health and Safety Administration (OSHA) Regulation 29 CFR 1910.1200.

18f OSHA Regulation 29 CFR 1910.134.

18g OSHA Regulation 29 CFR 1910.1030.

Appendix 18.1 - Off-site/Contractor Disposal

Biomedical waste disposal contractors provide a variety of services depending upon the needs of the facility. These services include:

Inspection services: On-site inspections to ensure the facility that they are following all applicable federal, state, and local administrative codes. Typically service providers notify the client when any changes occur in administrative codes.
Waste Plan: Facilities are provided with a Biomedical Waste Plan customized for each facility that is served and usually provided as part of the service.
Training: Facilities are typically provided with a Biomedical Waste Training Manual tailored to the facility served. Providers generally conduct training sessions as part of the service.
Consulting services: Most service companies have specialists trained by OSHA to conduct inspections to help facilities comply with OSHA's Occupational Exposure to Bloodborne Pathogens (29 CFR 1910.030). These services are usually provided at an additional cost to the facility.
Emergency services: Service providers are generally equipped to handle biohazardous spills that may occur that facility staff are not equipped or trained to handle. These services are usually provided at additional cost to the facility.
Supplies: Service providers always carry a full line of biohazardous waste containers, sharps containers, sterilization solutions, paper products, cleaning products, and certain types of medical supplies.

Biomedical waste disposal contractors are usually licensed by the state in which they operate and all have to comply with applicable Department of Transportation regulations concerned with the transport of hazardous or biohazardous waste.

Costs vary according to locale, licensing requirements and distance to the disposal site. Typical costs are:

Sharps containers (reusable): $70.00 – 150.00 per year depending upon volume (including pick-up, disposal and return)
Medical waste disposal: $.18 - .25 per pound
Disposable containers: $1.00 – 1.25 (container only)
Disposable containers: $17.00 – 20.00 (including disposal)

Off-site/contractor disposal is an attractive option in that contractors provide all the necessary paperwork to track regulated medical waste "from cradle to grave." Also, contractors can provide valuable and reliable training, information, inspection and emergency services.

Appendix 18.2 - Federal/State Guidelines

CFR40 Part 60: Protection of Environment

On August 15, 1997, the EPA Administrator signed the final standards and guidelines to reduce air pollution from incinerators that are used to burn hospital waste and/or medical/infectious waste (MWI). These final standards apply to "existing MWI's" built before June 20, 1996 and "new MWI's" built after June 20, 1996. These standards are expected to reduce air emissions from MWI's by 75 to 98 percent from levels existing at that time. These final standards supply to "existing MWI's" built before June 20, 1996 and "new MWI's" built after June 20, 1996.. Additionally, these final guidelines are for use by States in developing plans to reduce air pollution from new and existing MWI's and are only minimum standards. These revised guidelines mean

that any new incinerators will probably be built by large commercial concerns or regional hospital systems, and not individual healthcare institutions.

EPA expected the final standards and guidelines to result in a discontinued use of as many as 50 to 80 percent of the almost 2,400 existing MWI's. Also, due to the increased cost of on-site incineration under the final rules, few health care facilities are likely to install new MWI's. Instead, they are likely to switch to other methods of waste disposal such as off-site commercial waste disposal or on-site disinfection technologies.

EPA based the emission limits for existing MWI on stringent air pollution controls known as maximum achievable control technology. In order to meet the new limits most existing MWI's will need to install add-on pollution control systems, most likely scrubbers.

Outlook

On June 24, 1998, the American Hospital Association (AHA) and the U.S. Environmental Protection Agency (EPA) jointly signed a "Memorandum of Understanding" (MOU) that calls for the elimination of hazardous chemical mercury from the waste stream by the year 2005. In addition, the MOU calls for initially reducing the total volume of all types of waste generated in hospitals and health systems by one third by 2005 and ultimately by half by the year 2010.

Under the collaboration, the EPA and AHA have agreed to:

- Undertake collection of baseline data on hospitals' pollution prevention efforts;
- Monitor hospitals' success in meeting goals of reducing waste;
- Sponsor educational seminars about waste management and mercury reduction;
- Participate in an Environmental Leadership Council, a group comprised of hospital leaders, EPA officials, environmental groups, and others that will provide recommendations to the AHA about educational and outreach activities to hospitals, health systems and health care workers to help reach these waste reduction goals; and
- Develop Internet-based model waste minimization plans for hospitals targeted at specific chemicals.

As a result of these kinds of initiatives undertaken by the government and private institutions, any design criteria should take into account current efforts to reduce medical waste. Obviously, the reduction of medical waste could impact the required area needed for the processing of regulated medical waste and hazardous waste such as mercury. Additionally, economic benefits of the reduction of waste streams from hospitals not only affect operating costs but could beneficially impact construction costs.

State Guidelines

State guidelines generally provide generic guidelines for the training of waste handling personnel, labeling, transport, treatment and policies and procedures. However, California Health and Safety Code (Section 118275-118320) outlines stringent standards for the storage of biohazardous waste or regulated medical waste.

California guidelines require that "if a person generates 20 or more pounds of biohazardous waste per month, the person shall not contain or store biohazardous or sharps waste above 0° Centigrade (32° Fahrenheit) at any onside location for more than seven days without obtaining prior written approval of the enforcement agency."

Also, the regulation provides for more frequent removal of biohazardous or sharps waste stored at a facility if odor becomes a nuisance.

When designing waste handling facilities located in California if storage times of seven days or more are contemplated the inclusion of refrigeration should be considered.

Attachment 1
Incineration

With the August 1997 changes to CFR 40 Part 60 (See comments under Federal/State Guidelines) EPA expects the new standards to apply to between 10 and 70 new medical waste incinerators by the year 2002. Additionally, these final air emission guidelines are for use by States in developing State plans to reduce air pollution from existing and new medical waste incinerators and are only minimum standards. States could impose even more stringent standards while meeting the intent of the law.

These revised guidelines mean that any new incinerators will probably be built by large commercial concerns (Browning Ferris Industries – BFI, Med-ex, etc.) or regional hospital systems and not individual health care institutions.

Attachment 2
Medical Waste Treatment Technology

Current viable solid medical waste treatment methods include retort sterilization, incineration, microwave, and chemical disinfection (see Table 18-1, Mil-Hdbk-1191, Chapter 18). Microwaving would be the preferred alternate treatment method due to the lack of emissions and economy of treatment. Costs for microwave treatment average $.06 - .10 per pound (not including capital cost) versus $.27 - .30 per pound. However, a unit designed to treat 600-900 pounds per hour costs $650,000 (not including installation) and has dimensions of 24 feet long, 9 feet high and 11 feet wide (not including operating space).

With emphasis being placed on medical waste reduction (see Appendix 18.2: Federal/State Guidelines concerning "Memo of Understanding" between the Environmental Protection Agency and the American Hospital Association) the potential volume reductions would extend any payback period beyond a reasonable economic life.

BIOMEDICAL WASTE TREATMENT TECHNOLOGIES

Technology	Approximate Treatment Cost[1]	Approximate Capital Cost	Approximate Space Requirements[2]
Microwave	$ .06 - .10/lb	$425 – 650 K	>1500 SF[3]
Autoclave	$ .06 - .10/lb	$100 – 250 K[4]	>1500 SF
Chemical	$ .03 - .06/lb	$75 – 1450 K	>1500 SF

[1] These do not include transportation and landfill costs.
[2] These requirements are for equipment and working space. Final requirements should be determined after volume estimates are determined and transport method has been determined.
[3] Height requirements vary with the dumping method used (top loading vs. side loading).
[4] These costs do not include a shredder which would be required for any installation.

On-site treatment should be considered when the annual capacity exceeds approximately 500,000 pounds of regulated medical waste. Otherwise, off-site treatment by commercial methods should probably be used. In view of current efforts to reduce medical waste, on-site treatment should only be considered after all conservation efforts have been considered.

SECTION 19: INTEGRATION OF BUILDING SYSTEMS

19.1 General. This section provides guidance for the use of Integration of Building Systems (IBS) concepts for the design of all medical and medical research facilities. IBS design involves the coordinated design of all elements of a building, integrating the functional, architectural, electrical, energy, fire protection, mechanical, structural, and other features into a unified whole. All design elements are recognized as essential to a successful facility, and are therefore to be treated simultaneously and with equal weight. The objective of IBS design is to achieve a building of optimum functionality, appearance, maintainability and adaptability. Attention must be given to structure, utility systems and equipment with the involvement of all design disciplines from the beginning of design in order to minimize interference with the facility mission and at the same time assure high quality utility services. Inherent in IBS design for medical and medical research facilities is the minimization of maintenance traffic and operations within functional areas through careful consideration of equipment room locations and the routing of utility services. Equally important is the assurance of proper installation, and maintainability, of primary and distribution equipment through careful consideration and coordination of envelope space requirements. Utility system space planning must occur simultaneously with overall site and facility planning. Aesthetic prominence or idealized functional planning without full coordination with structure and all utility systems is not acceptable.

19.2 Policy. The basic IBS design concepts apply to all medical and medical research facilities regardless of size. The more sophisticated IBS Systems Module design concepts, including utility pods and interstitial walk-on decks dedicated to utility distribution, are to be considered only for larger or more complex facilities. Use of the IBS Systems Module design concepts must be approved by TMA-DMFO.

19.3 Basic IBS Design Concepts.

19.3.1 Equipment Room Locations. In planning the locations of mechanical, electrical and communications equipment rooms, designers shall consider such factors as exterior access, the routing path and length of service feeders to the areas served, and the proximity of ventilation air intakes to potential contamination sources. Well distributed equipment rooms minimize problems in design, construction and maintenance. Coordinate all equipment room locations to minimize utility distribution "choke points," particularly in above-ceiling spaces, where multiple systems may cross or converge. Such crossings lead to inadequate space for equipment installation, maintenance and ventilation. Major equipment rooms shall have exterior access with paved surfaces for wheeled transport of equipment. Consider also requirements for horizontal and vertical access to interior, below-grade or upper level equipment rooms including transport of the largest items of equipment that may require replacement.

19.3.2 Equipment Room Space Requirements. The designers shall assure that equipment space requirements are properly coordinated among the different design disciplines thus permitting proper installation while preserving required maintenance clearances. As equipment is

normally competitively bid, the designers must assure that space envelope requirements are provided based on worst-case analyses of equipment from a minimum of three manufacturers. Plan and elevation views showing coordinated equipment and space envelopes shall be included in the required design submissions.

19.3.3 Utility Distribution Considerations. The length and complexity of utility distribution runs should be reasonably minimized to avoid unnecessarily high flow resistance with resulting additional energy consumption, larger duct and feeder sizes, and loss of future flexibility. When practicable, avoid routing utility feeders through areas they do not serve in order to minimize the impact and complexity of future facility modifications. Service isolation and balancing devices, and terminal equipment, that may require periodic inspection or maintenance should be located above corridors.

19.3.4 Distribution and Terminal Equipment Space Requirements. The designers shall assure that distribution and terminal equipment can be installed in the spaces indicated, including above-ceiling spaces, distribution spaces, chases, etc. This requires thorough coordination of all equipment with the architectural and structural features of the building. To assure that installation is possible, the designers shall plan distribution space requirements on the basis of sizing calculations and the worst-case joining, reinforcement and support conditions permitted by the design. The designers are particularly cautioned to carefully consider the vertical space requirements of sloped gravity piping services. The designers must also be aware of, and provide for, code-mandated dedicated space requirements above, and adjacent to, electrical panels and equipment.

19.4 IBS Systems Module Design Concepts. IBS Systems Module design concepts, as discussed below, are normally only economically practicable for larger or more complex facilities. Systems Module design locates the majority of utility distribution and terminal equipment on interstitial walk-on decks, thus permitting convenient installation and maintenance. A candidate project for Systems Module design shall be evaluated during initial design by an economic comparison with conventional design. All costs associated with acquisition, operation, maintenance and alteration for a period of 25 years, or the designated life of the proposed building, shall be included in the comparison.

19.4.1 Systems Module. The Systems Module, a designated unit of space one story in height, is the basic building block of a Systems Module building, i.e., the building is composed of separately identifiable Systems Modules each consisting of a utility pod, a distribution zone, a connection zone and an occupied zone. Each Systems Module is served by its own utility distribution systems. The relationship of the various zones is illustrated in Figures 19-1 and 19-2. Systems Modules should range in area from 930 to 2090 m^2 (10,000 to 22,500 ft^2). Although there is a spatial discipline associated with the Systems Module, the overall organization and massing of a building can be varied according to specific project requirements. Repetitive Systems Modules will allow both expanded forms to accommodate the need for a day-lighting/solar approach or compact forms to allow a closed approach that attempts to negate the effect of climate. These forms are illustrated in Figure 19-3. In multistory buildings the utility

pods shall be stacked from floor to floor so that plumbing and electrical risers can be efficiently and economically accommodated.

19.4.1.1 Utility Pod. The utility pod contains air handling unit(s) and associated risers, fans, pumps, etc.; electrical and communications equipment and associated risers; and other main equipment and risers serving the Systems Module. Fresh air and exhaust openings are generally part of the utility pod enclosure. Access to the utility pod is from adjacent stairs. The utility pod is defined by the floor and the underside of the floor or roof structure above.

19.4.1.2 Distribution Zone. The distribution zone accommodates the main horizontal utility distribution systems of a Systems Module and provides convenient access to these systems by means of a suspended walk-on deck. Utility distribution systems enter and leave the utility pod through the distribution zone. The distribution zone consists of horizontal layers of space, or sub-zones, individually dedicated to specific utility distribution equipment (pipes, ducts, raceways, conduit, cable trays, etc.). This equipment is run in distribution channels within the sub-zones. Structural suspension members for the walk-on deck should be placed to define the distribution channels. Except for gravity piping services, most systems in the distribution zone down feed to the connection zone below. Access aisles are provided on the walk-on deck for maintenance access to equipment and at the perimeter of the walk-on deck. These shall provide sufficient clearance, exclusive of major structural members, for a worker to stand. Access aisles should have clearly marked dust-free walking surfaces. Any fireproofing of structural members crossing the access aisles should be covered or otherwise protected. Access to the distribution zone shall be from adjacent stairs and also, in multistory buildings, from key-operated service elevators designed to stop at the walk-on deck levels. No access to the distribution zone shall be permitted through access panels from the connection zone. The distribution zone is defined by the walk-on deck and the underside of the floor or roof structure above.

19.4.1.3 Connection Zone. The connection zone is the layer of space between the underside of the walk-on deck of the distribution zone and the architectural ceiling of the occupied zone below. The connection zone accommodates the horizontal distribution of utilities to individual rooms. It shall be deep enough to accommodate recessed lighting fixtures and air diffusers and their supports. Access to the connection zone shall be from the occupied zone usually through the architectural ceiling.

19.4.1.4 Occupied Zone. The occupied zone is the zone of functional activity in a Systems Module. The occupied zone is defined by the floor and the architectural ceiling above.

19.4.2 Systems Module General Considerations.

19.4.2.1 Design Exceptions. Certain spaces within a building may not lend themselves practicably or economically to the use of walk-on decks. Examples are sloped floor areas; high ceiling rooms such as operating rooms, auditoriums, warehouses and atriums; and MRI suites where equipment weight or unusual structural requirements may be applicable. These exceptions should be established early in the design

process so that the IBS Systems Module design concepts can be modified for such spaces.

19.4.2.2 Building Expansion. The Government shall inform the designers at the beginning of the design process of any vertical or horizontal building expansion requirements, and to what extent planning, structure and utility systems must provide for these requirements. Placement of utility pods should not encumber building expansion.

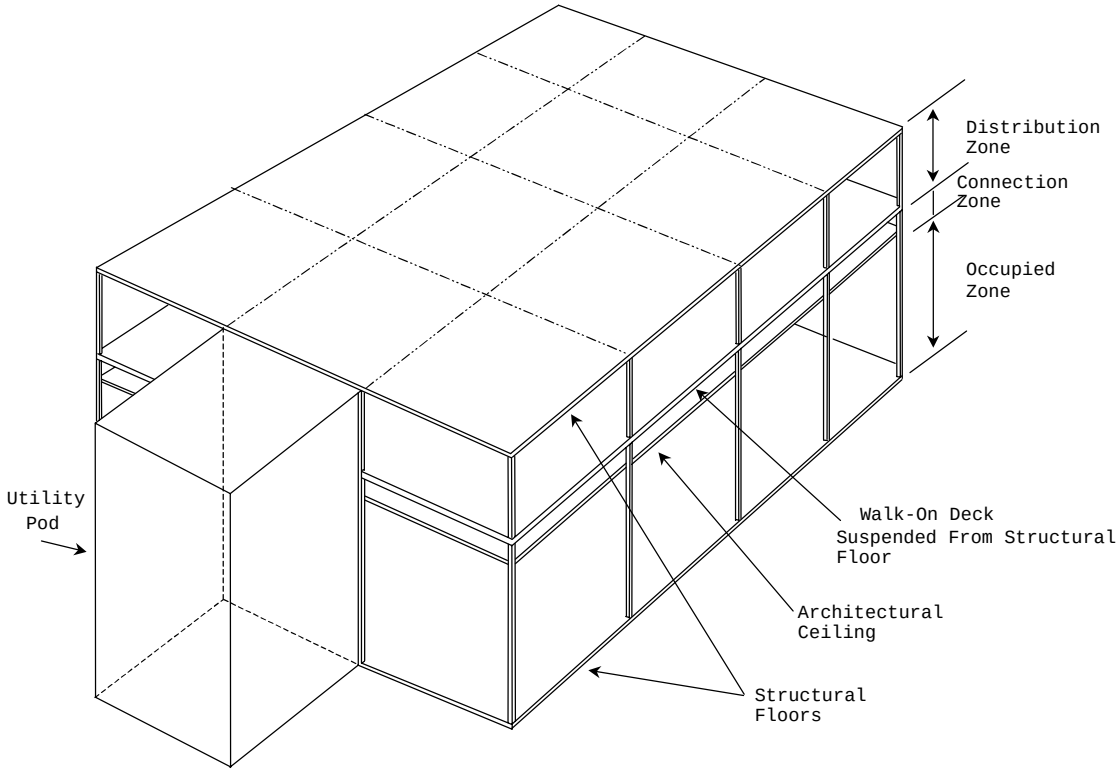

TYPICAL SYSTEMS MODULE

FIGURE 19-1

19.4.2.3 Existing Buildings. When a Systems Module building is to be connected to an existing conventional building, design concerns may arise. Existing floor-to-floor heights are typically less than the heights required for Systems Module construction. Therefore, it will be necessary to determine which new floors should align with existing floors. Continuity with existing buildings should not be hastily assumed to preclude application of the IBS Systems Module design concepts.

19.4.2.4 System and Equipment Capacity Increases. The designers should recommend which utility systems should be oversized to accommodate future change. Air handling units in utility pods and ducts in distribution zones may be designed to have their capacities increased for future demand growth. Other distribution systems may also be designed to accommodate a degree of capacity increase. During

initial design, the Government and the designers shall jointly determine the extent of system and equipment capacity increases required.

19.4.2.5 Distribution Zone Accessibility. The available vertical space clearances within the distribution zone shall be sufficient to permit the organization of the utility distribution systems for easy accessibility. It may not be practicable to arrange the distribution zone for complete accessibility to every component. However, it is important to examine the various accessibility requirements in order to best locate access aisles for primary accessibility to all main systems, feeders, connections and maintainable equipment.

19.4.3 Systems Module Mechanical and Plumbing Considerations.

19.4.3.1 Riser Locations. Risers and vertical circulation elements, not located in the utility pods, shall be located at the boundaries of the Systems Modules adjacent to permanent structural elements, stairs or elevators.

19.4.3.2 Valves. Control valves, except those required to be in the occupied zone such as medical gas control valves, should be located in the utility pod to permit centralized control. Shutoff valves located in the distribution zone should be tagged and identified on a valve list that shows their distribution zone locations and the areas or equipment served in the occupied zone.

19.4.3.3 Systems Expandability. Prime moving equipment, i.e., pumps, fans, etc., shall be selected with conservative judgment and the distribution systems sized for expansion capability. In general, air handling units and pumps should be selected for operation at the midpoint of their operating characteristic curves. Ducts and piping should be sized to permit future flow increases. Stubs, valves and caps shall be provided in plumbing risers and in horizontal branch terminations for future service extensions.

19.4.3.4 Air Handling System Selection. System selection shall be based on functional needs, life cycle cost analyses, energy efficiency and ease of maintenance and repair. To enhance maintainability, it is normally desirable to “standardize” the size of air handling units when practicable from a performance standpoint. For example, several air handling units of the same unit size and motor horsepower, i.e., a modular design, will allow economy in the stocking of spare parts. “Off-the-shelf” packaged air handling units should be selected in lieu of custom manufactured units to assure parts availability and ease of future modification.

19.4.3.5 Ventilation of Distribution Zone. Under normal conditions, the distribution zone will not require fresh air ventilation. However, if so determined by the designers, ventilation may be required for moisture or temperature control in distribution zones exposed to roofs. A means of purging the distribution zone of smoke and other products of combustion shall be provided.

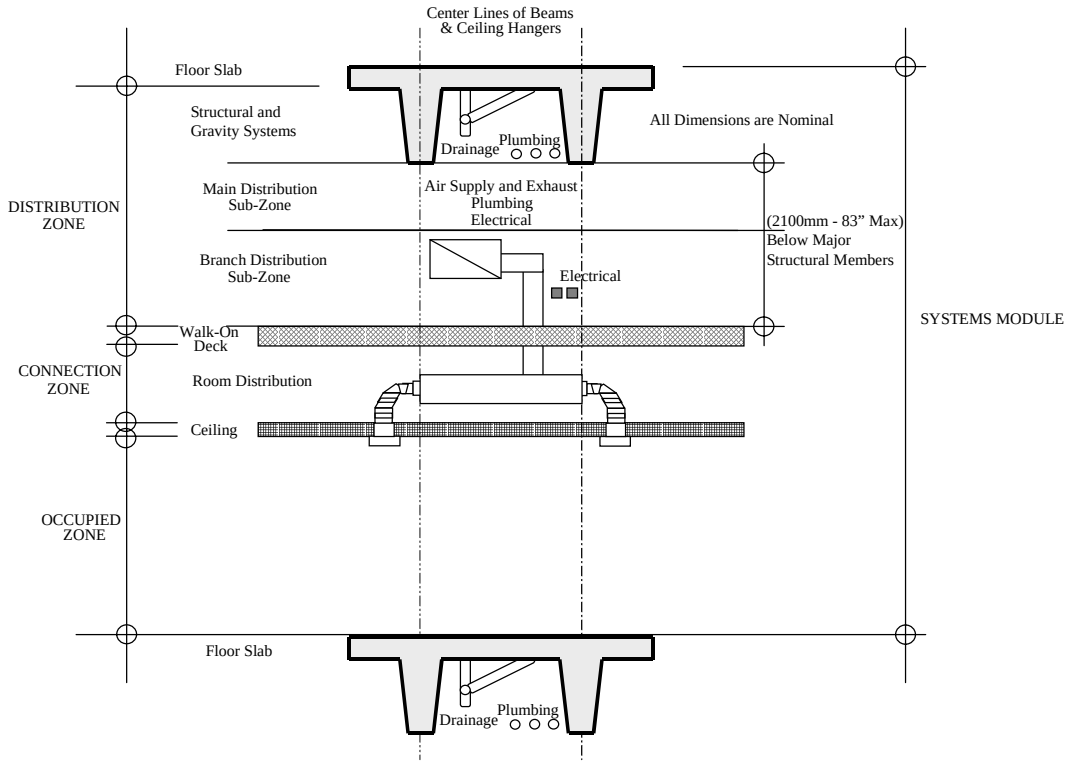

SYSTEMS MODULE ELEMENTS

FIGURE 19-2

19.4.3.6 Gravity Systems. The vertical depth requirement of sloped gravity piping services should be checked to determine if such piping will drop into the next lower distribution sub-zone or if an intermediate riser should be provided.

19.4.4 Systems Module Electrical and Communications Considerations.

19.4.4.1 Distribution Systems. Distribution system routing (horizontal and vertical), and the quantity and location of unit substations, shall be based on the size of the facility, life cycle cost analyses, overall flexibility, and long-term system reliability. The benefits of underground utility service distribution to the utility pods should be compared with service distribution through the distribution zones considering flexibility, reliability and safety.

19.4.4.2 Electrical and Communications Room Locations. Electrical and communications rooms shall be located in the utility pods and should be stacked vertically from floor to floor. Provisions should be made for easily running vertical cabling from floor to floor, i.e., conduit risers with pull boxes at each distribution zone. Cabling and wiring shall be sized for allowable voltage drop at full design load. For very long Systems Modules, the need for additional electrical and communications rooms, located at opposite ends of the Systems Modules from the utility pods, should be evaluated for maintenance of acceptable voltage drops, reasonable lengths of secondary cable runs, and numbers of devices per circuit. These additional rooms shall be

located in the occupied zones adjacent to permanent structural elements, stairs or elevators and should also be stacked vertically from floor to floor.

19.4.4.3 Capacities for Flexibility. Capacities of major electrical components such as main distribution panels and transformers shall be based on the areas served, rather than specific use, to allow for flexibility. Communications systems shall be designed in a similar manner.

19.4.4.4 Electrical Secondary Distribution. Branch circuiting should be routed through the distribution zone to allow for modification with minimal disruption of the occupied zone. Cable trays shall be used to distribute electrical systems wiring. Ground continuity shall be provided throughout the cable tray system. Cable trays shall be designed using conservative judgment and space shall be dedicated in the distribution channels assigned to electrical services for future cable trays. See Section 13: Fire Protection for plenum rated cable requirements.

19.4.4.5 Communications Systems Distribution. Cable trays shall be used to distribute communications systems wiring. Ground continuity shall be provided throughout the cable tray system. Cable trays shall be designed using conservative judgment and space shall be dedicated in the distribution channels assigned to communications services for future cable trays. See Section 13: Fire Protection for plenum rated cable requirements.

19.4.4.6 Identification. Coded identification of electrical conduit runs by voltage and function shall be provided. Circuit identification for electrical wiring and system identification for communications wiring shall also be provided.

19.4.4.7 Lighting. Fifty lux (five foot-candles) of lighting shall be provided throughout the distribution zone. One hundred fifty lux (fifteen foot-candles) shall be provided over access aisles, using damage-resistant lighting fixtures. Egress lighting and exit signs shall also be provided over access aisles and at distribution zone exits. Switches shall be provided at each distribution zone entry and exit. Providing all switches with timers to turn off distribution zone lighting after a certain time interval should be considered.

19.4.4.8 Power. A pattern of electrical outlets shall be provided in the distribution zone for portable tools and extension cords.

19.4.4.9 Telephones. A pattern of telephone outlets shall be provided in the distribution zone for portable telephones. Telephone outlets located adjacent to maintainable equipment should be considered.

19.4.5 Systems Module Fire Protection Requirements. Refer to Section 13: Fire Protection for fire protection requirements.

19.4.6 Systems Module Construction Time and Cost Considerations.

19.4.6.1 Construction Time. Construction time for a Systems Module building can be less than for a conventional building. With a walk-on deck, trades can work concurrently in the occupied zone and the distribution zone rather than in sequence as in a conventional building. The majority of the work in the distribution zone can be performed in a comfortable standing position on the walk-on deck instead of from a ladder as in a conventional building. Repetition by modular design and standardization of equipment can also reduce construction time.

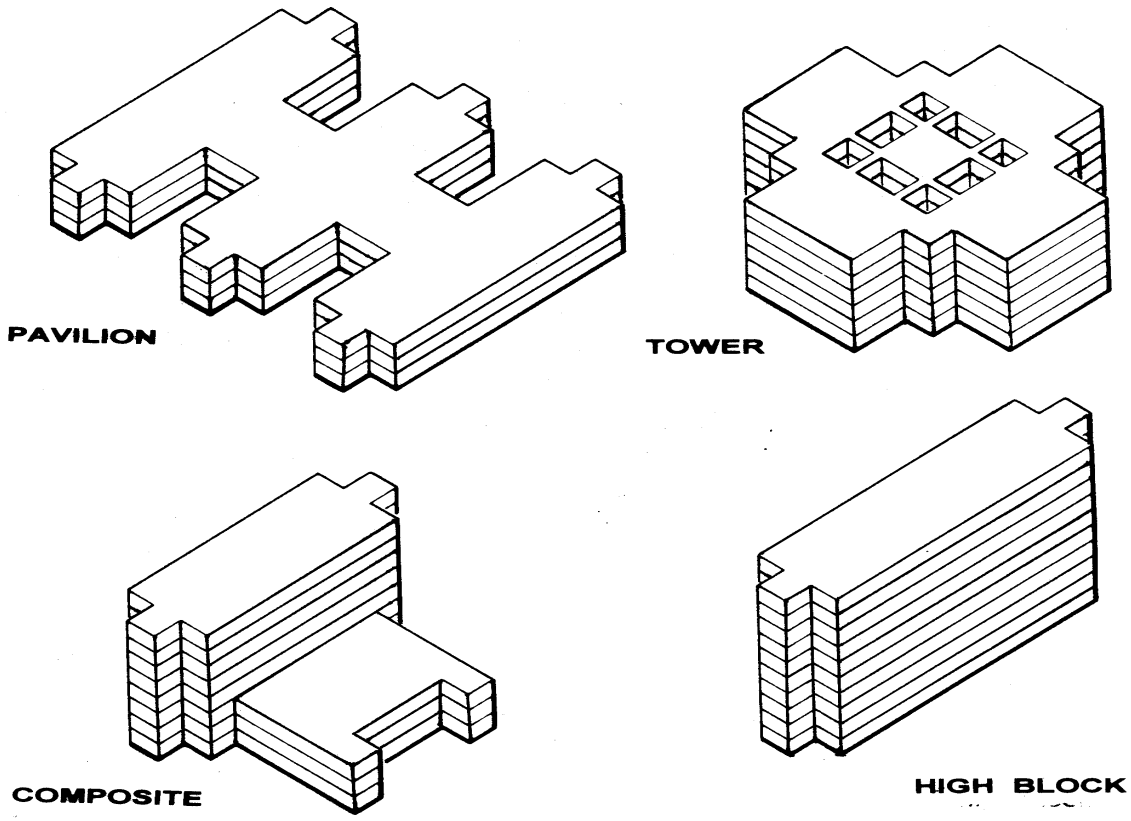

ALTERNATIVE BUILDING CONFIGURATIONS

FIGURE 19-3

19.4.6.2 Construction Cost. The initial construction cost for a Systems Module building can be greater than for a conventional building due to the interstitial walk-on decks and increased building height.

19.4.6.3 Maintenance Cost. The maintenance cost for a Systems Module building can be lower than for a conventional building when accessibility to utility systems in the distribution zone is assured by observance of the IBS Systems Module design concepts presented in this section. Equipment is more easily accessed and workers are provided with convenient power, communications and lighting to facilitate maintenance tasks. However, there will be some added maintenance cost for the distribution zone, i.e., lighting, walk-on deck and access aisle repair, fireproofing repair or replacement, etc.

19.4.6.4 Flexibility for Modification and Alteration. Most medical and medical research facilities undergo frequent and significant modification and alteration during their lifetimes. In a conventional building, such changes normally result in extensive utility disruption for other areas due to the need to upgrade or modify systems. Typically, a Systems Module building modification requires only changes to distribution zone utility systems and equipment serving the portion of the occupied zone undergoing change, resulting in a simplified work effort and less disruption to the ongoing building function. Systems Module buildings inherently provide capacity for future expansion, load growth and modification, often without requiring costly primary and distribution equipment upgrades.

19.4.7 Systems Module Documentation and Construction Considerations.

19.4.7.1 Construction Documentation. Drawings for Systems Module buildings shall include plans and sections delineating utility distribution channels in each distribution zone sub-zone. Drawings shall be coordinated with all disciplines. Interdisciplinary cross-sections at critical locations, i.e., above operating rooms, equipment rooms, corridors, etc., shall be provided. Requirements for coordination of all disciplines prior to construction shall be included in all pertinent specification sections.

19.4.7.2 Pre-Bid Conferences. To ensure that construction contractors take the IBS Systems Module design concepts into account when preparing bids, presentations of these concepts are recommended for pre-bid conferences conducted by the Government.

19.4.7.3 Pre-Construction Consideration. For a Systems Module construction project, a sample distribution zone, at least 93 m^2 (1000 ft^2) in area, should be constructed at the project site. The sample should include a complete walk-on deck assembly with suspension members. The sample should also include elements of the utility systems within the distribution zone. Construction of the sample should be sufficiently in advance of building construction to allow time for necessary testing and approval. Various construction details can also be addressed and finalized with this sample, i.e., temporary protection of the walk-on deck during construction, proper support and sealing of ducts and fire dampers at walk-on deck penetrations, and permanent fire sealing of the walk-on deck to abutting walls and other permanent structural elements.

Section 20: CONSTRUCTION

20.1 General. The Construction Agents have the responsibility to administer and manage all aspects of construction in accordance with the final plans and specifications. The Tricare Management Activity - Resource Management (TMA-RM) has the overall fiscal responsibility for the medical MILCON and the O&M programs. The Surgeon General's Health Facilities personnel for the respective Military Departments are responsible for ensuring compliance with medical functional standards and requirements during construction, for providing assistance and liaison between the medical community and the Construction Agent, and for providing continuity from planning and design through beneficial occupancy for each project.

20.2 Advertising. Authority to advertise the construction contract will be given by the TMA-RM when the Design Agent has submitted to the TMA-DMFO a certification that the design is complete, it complies with the approved concept design, and provides a copy of the validated Current Working Estimate (CWE) indicating the base bid, options and any proposed additive bid items. A copy of this information will also be provided to the using Military Service.

20.3 Contract Award. TMA/RM will provide authority to the Design Agent to award a construction contract upon receipt of a written award request and a current working estimate in DD Form 1391 detail if the low bid CWE is less than or equal to the authorized Programmed Amount (PA). If the low base bid CWE exceeds the current PA, the Construction Agent will coordinate with the using Military Service within three working days of bid opening to determine the best course of action. The Construction Agent, after consulting with the using Service, will provide recommendations and options available to TMA/RM regarding disposition of the bid results. Recommendations will include any possible measures that would allow construction contract award within the current PA/or funds available.

20.3.1 Bid Opening Report. The Construction Agent will utilize the bid opening report to develop the government approved CWE. The CWE will identify all projects cost data including the contractor bid amounts (base bid plus additives) and all other non-contractor cost data which will form the basis of the recommended award CWE.

20.3.2 Award Report. The construction agent will provide the TMA-DMFO a contract award report within five working days of the construction contract award date. The report will include the final CWE (base bid and additive items, other costs as listed in 20.3.1 above), name of contractor, award date, anticipated date of notice to proceed, projected construction start date, and anticipate Beneficial Occupancy Date (BOD).

20.4 Construction Management. This guidance applies to all projects in the Defense Medical Program unless a waiver is obtained from the TMA-DMFO.

20.4.1 Construction Management Plan. The Design/Construction Agent will develop a Construction Management Plan (CMP) in close coordination with the using Military Department. The CMP will establish the processes and procedures for the execution of the construction contract. The CMP shall include construction coordination meetings, and construction quarterly meetings, as

deemed appropriate. The CMP, as part of the Construction Agent's Structure, will establish a Corporate Group, consisting of headquarters level members from the Construction Agent and the using Military Department. The Corporate Group will review all non-mandatory construction changes that exceed $5,000, or amount as otherwise directed in the CMP, and make a determination to either fund the change or to defer it for future consideration, dependent on the availability of funds near the completion of the construction. Non-mandatory changes that exceed $5,000 and for which there is disagreement among the Corporate Group may be submitted to TMA-DMFO for approval. The Corporate Group will also approve the use of all construction funds for other than construction changes, such as Architect-Engineer services during construction and extensions of design.

20.4.2 Construction Management Team. Establish a Construction Management Team for all Medical MILCON projects. The team should consist of representation from the following organizations:

20.4.2.1 Design & Construction Agent. The Construction Agent administers the construction contract, in coordination with the design agent if different. The management of the contract and interface with the construction contractor are the responsibility of the Construction Agent.

20.4.2.2 Military Department. The using Military Department representatives will coordinate contract change orders that may affect the functional use of the facility, processing user initiated change order requests, and assisting the Construction Agent in expediting the acceptance and transfer of the completed construction. The using Military Department may participate in review of shop drawings.

20.4.2.3 Installation Engineer. The Installation Engineer will participate in matters which affect the military installation such as maintainability, outages of site utilities, and traffic flow.

20.5 Construction Change Orders. Changes shall be incorporated in a manner that will minimize disruption to the ongoing construction contract and, for renovation projects, also minimize the impacts to the operation of the Medical Treatment Facility. Approval authority is dependent on the size, type of change, and project funds status, as enumerated below:

20.5.1 Mandatory Changes. Mandatory changes are changes that must be made to allow the construction to proceed in accordance with the Government approved construction schedule and to provide a complete and operational facility. These changes normally fall into one of the following categories:

20.5.1.1 Differing site conditions

20.5.1.2 Design errors or omissions in the plans or specifications

20.5.2 Non-Mandatory Changes. Contract modifications for changes in medical operating procedures, equipment, or capabilities; improvements to the maintainability or functionality of the facility; or implementation of contractor value engineering (VE) proposals. These are changes which, whether implemented or not, will result in a fully functional facility when the facility is completed.

20.5.3 Using Service Change Requests (USCR). Changes that are initiated by the Military Department are Using Service change requests (USCR). Usually these changes result from changed user requirements, mission changes, operational changes, functional changes, support equipment revisions, and usually originate at the end user, installation level. These changes will be evaluated on a case by case basis to determine whether they are mandatory or non-mandatory. If determined to be non-mandatory and if they exceed the dollar threshold then the Corporate Group must authorize the change prior to the Construction Agent execution of the contract change order.

20.5.4 Contractor V-E Proposals. These changes must be carefully scrutinized by the appropriate level within the Construction Agency (HQUSACE, AF/ILECM and HQNAVFAC/MFDO) and by the using Military Department to assure technical criteria and medical standards/requirements are not compromised. The Corporate Group, established as part of the Army Corps of Engineers process, prior to execution, must approve these changes.

20.5.5 Criteria and System Changes. Changes that alter system designs, life safety features, or change functional requirements must be submitted to the Medical Facilities Design Office (Navy) or Corps of Engineers as appropriate, and the using Military Department representative prior to approval and incorporation.

20.5.6 TMA-DMFO Approval. TMA-DMFO must approve all changes that add significant new features to the project, which were not originally contemplated in the design. All change orders, with a cumulative government cost estimate in excess of $100, 000, or other proposed construction contingency obligations in excess of $100, 000, must be submitted to the TMA-DMFO for concurrence and approval prior to obligation of construction funds. These proposed changes will be coordinated thru the HQUSACE (CEMP-MD), AF/ILECM and HQNAVFAC (MFDO) prior to submission to TMA-DMFO.

20.5.7 Procedures. The Construction Management Team construction change order approvals will be at the field level unless otherwise negotiated between the Design/Construction Agent, the using Military Department, and the contractor, as identified in the Construction Management Plan.

20.5.8 Change Order Processing Length A plan of action to complete requested changes, pending in excess of 90 days from the date identified, will be prepared by the Design/Construction Agent to notify the using Military Department of the time frame for incorporation or resolution of the change.

20.5.9 Mediation. Non-mandatory construction change requests, which cannot be resolved between the Construction Agent and the using Military Department, may be submitted through the appropriate channels to TMA-DMFO for review and final decision.

20.6 Construction Funds.

20.6.1 Funds Management. TMA-RM will sub-allocate all of the apportioned design and construction funds to the respective Design/Construction Agents. The Agent will manage the funds at the project level.

20.6.2 Reporting. The HQUSACE (CEMP-MD)/HQNAVFAC medical program manager and HQAF/ILECM will provide a quarterly report with the status of funds to the TMA-DMFO and the using Military Department. The report shall include the usage of all construction funds and obligations. The accounting of the construction funds usage should also include Engineering and Design during Construction (EDC) obligations, as applicable. The report should contain, as a minimum, the original award amount, amount of executed modifications, costs related to Engineering During Construction, cost of A-E post award services, program management reserve, Category E&F equipment costs, and set-aside costs for other project funded items.

20.6.3 Funds Availability. If funds required for either mandatory or non-mandatory changes exceed the amount available and the management reserve account is inadequate, the Construction Agent will notify TMA-RM in writing along with justification for additional contingency funds as appropriate.

20.7 Installed Equipment (Category E and F).

20.7.1 Funds Management. The Construction Agent will sub-allocate funds required to procure this equipment as determined by the using Military Department up to the amount shown on the DD Form 1391 and as reflected in the equipment list as Category E and F.

20.7.2 TMA-RM Notification. The Construction Agent shall notify TMA-RM if actual requirements exceed the apportioned amount.

20.7.3 Reporting. The Construction Agent shall provide TMA-RM with a quarterly update on the status of MILCON equipment funds. Final MILCON Funds Status Report (reference paragraph 20.9.2) shall include a list of the equipment purchased by the Construction Agent or using Military Department.

20.8 Contractor Claims.

20.8.1 TMA-RM Notification. The Construction Agent will notify TMA-RM and the Military Department of submitted contractor claims that have been approved by the Contracting Officer or the Board of Contract Appeals within 30 working days of date of the determination to reimburse the contractor, for claims in excess of $100,000.

20.8.2 Reporting. Such claims will be accompanied with a narrative explanation and assessment of the claim's merit, recommended resolution, estimated final cost, and whether or not sufficient contingency funds are available to make the payment.

20.8.3 TMA-RM Authority. The TMA-RM is responsible for monitoring fiscal compliance with the Public Law that provided Military Construction authorization. The Construction Agent is responsible for keeping the TMA-DMFO and TMA-RM apprised of any field decision or change order request with merit, which may exceed the Public Law and require a Congressional cost variation notification.

20.9 TMA-DMFO Quarterly Execution Reporting Requirements. The Design and Construction Agents submit the following reports to TMA-DMFO and the using Military Department no later than three working days prior to each Quarterly

Execution meeting. The Design and Construction Agents should use this standardized report.

20.9.1 Project Status Report (Figure 2-3).

20.9.2 MILCON Funds Status Report (Figure 2-4). The information for each project should consist of the following information, as a minimum:

20.9.2.1 Title and location

20.9.2.2 Using Military Department

20.9.2.3 Program Amount (PA)

20.9.2.4 Amount of Medical MILCON funds sub-allocated for the project

20.9.2.5 Estimated award Current Working Estimate (CWE) for projects which have not yet reached bid opening date

20.9.2.6 Actual award CWE for awarded projects

20.9.2.7 Scheduled and Actual percentage construction completion, as applicable.

20.10 Post-Occupancy Evaluation (POE). The Military Departments and/or design agents will determine the need to conduct Post-Occupancy Evaluations of new facilities and periodic on-site visits to all other facilities. Copies of all Post Occupancy Evaluation reports will be provided to the TMA-DMFO for information. Information gathered will be used to update design criteria (see Section 1). The Military Departments are also authorized to perform their own Post Occupancy Evaluations.

20.11 JCAHO Statement of Conditions. The Construction Agent will provide an updated Statement of Conditions (SOC) for the Joint Commission on Accreditation of Healthcare Occupancies (JCAHO) Environment of Care Standards for certification purposes, at the completion of construction. The designer of record will complete the SOC and the Construction Agent will provide copies to the using Military Department and the medical facility.

SECTION 21: WAYFINDING AND SIGNAGE

21.1 General. Wayfinding and signage includes all visual messages extending from the site boundary of a Medical Treatment Facility (MTF) to an individual room designation. Wayfinding systems used within the site of a medical facility should provide a clear and concise means for patients, staff, and visitors to move about the site and facility as efficiently as possible. Wayfinding systems should be user-friendly to the first time user; those who are reading-disabled, non-English speaking or with English as a second language; those who are color blind, or visually impaired; and those who might be distressed, disoriented, or with poor direction sense. Wayfinding systems serve three functions: direction, identification, and information.

21.1.1 Sign Colors, Finish, Contrast and Typeface. Exterior sign colors shall be coordinated with military installation guidelines. The internally illuminated EMERGENCY sign shall have a red background with white lettering. Interior sign colors may be coordinated with the interior design palette if desired; a more neutral, long-term color choice may be preferred. Signs are more legible to persons with low vision when characters contrast with their background by at least 70 percent. Light-colored characters or symbols on a dark background are required. Characters and their background shall be non-glare with a recommended 11 to 19 degree gloss on 60 degree glossmeter. Helvetica Medium typeface is preferred; however, Helvetica Regular is acceptable. Only san serif fonts are allowed if other than Helvetica Medium or Regular is proposed. Upper and lower case characters are preferred to all upper case characters, except for the message “EMERGENCY” sign.

21.1.2 Americans with Disabilities Act Accessibility Guidelines (ADAAG)and Uniform Federal Accessibility Standards (UFAS) Compliance. Signs used throughout a medical facility shall conform to the requirements of the Americans with Disabilities Act Accessibility Guidelines (ADAAG) (reference 21a) or the Uniform Federal Accessibility Standards (UFAS) (reference 21b), whichever is more restrictive. Permanent information on room identification signs shall include characters raised 0.8mm minimum above the background with accompanying Grade II Braille. Braille dots shall have a domed or rounded shape. Permanent information includes the room designation on all room identification signs, symbol and message on all toilet rooms, message on janitor closets, mechanical, electrical and communications rooms, messages at stairways and rooms whose functions are unlikely to change in the foreseeable future due to the nature of the function.

21.2 Exterior Signs. Signs providing direction from around the military installation to the MTF site and back to major roads are part of the overall installation sign plan and generally not included within the Military Construction (MILCON) project. All signs located on the Medical Treatment Facility (MTF) site shall be included in the Military Construction (MILCON) project.

21.2.1 Placement of highway standards must be in accordance with Federal Highway Administration standards. Other signs must be placed far enough away from these to avoid visual clutter, which creates confusion. Directional signs must be placed far enough ahead of intersections to allow motorists to decide which way to go in time to make a safe turn.

21.2.2 Keep the number of directional signs and the information presented on each sign to a minimum, to prevent confusion. Begin directional signs for commonly used major services at campus boundaries

and guide a person through decision points to the parking area nearest to the entrance needed. Building entrance signs must be visible from that point. Group the information with left-pointing arrows at the top, up-pointing arrows next, and right-pointing arrows at bottom. Always place the EMERGENCY sign at the top of a directional signage group. Provide EMERGENCY directional signage at each entry drive to the medical facility campus. All EMERGENCY signage shall be on emergency power.

21.2.3 Provide building entrance identification signs for each major entrance to a facility. The sign shall describe the purpose of the entrance, that is, Main Entrance, Clinic Entrance, Dental Clinic, or other specific activity intended to be reached by the public primarily through that entrance. See Section 10 for lighted exterior signs. The EMERGENCY entrance must be marked by an internally illuminated sign in accordance with local area requirements and Department of Transportation Signage Standards (reference 21c). Building entrance signs must be visible to traffic approaching the building, in a contrasting color to the building and made of non-corrosive materials. If the design of the building lends itself to a building mounted sign, such a sign may be used; however, consideration must be given to the possibility of future functional changes which could render the sign obsolete. If this type is used, it must be easily removed and/or accommodate changes to the message. Include hours of operation for appropriate facilities, e.g. smaller clinics. Coordinate building entrance signs with landscape materials so that the landscaping, at maturity, will not obstruct the sign.

21.2.4 In large parking lots, include pole mounted signs which identify the row and lot designation, mounted at a minimum of 2500mm above grade, with a minimum letter height of 400mm. Color may also be used to identify lot designations in addition to the lot and row markings. Where exterior signs are located along walkways to the MTF from the parking areas, coordinate signs with landscape materials so that the landscaping, at maturity, will not obstruct the signs.

21.2.5 Coordinate sign lettering height with the anticipated traffic speed in the area, so that the sign message is legible to oncoming traffic, well in advance of the entry point to a parking area or turn. Recommended minimum letter height on directional signs is 150mm.

21.2.6 Parking designation signs shall also be provided. The most common types include Visitor Parking, Staff Parking and Outpatient Parking. Other types may be considered as local conditions dictate. Where multiple bay loading docks are provided, each bay shall be numbered.

21.2.7 "No Smoking" signs, with pictogram, shall be provided within 15 meters from all main entrances of a medical facility.

21.3 Interior Signage.

21.3.1 General.

21.3.1.1 The design of a wayfinding system in a medical facility presents many challenges to the designer. The following elements must be carefully considered by the designer:

a. Knowing where you are
b. Knowing what your destination is
c. Knowing and following the best route to your destination
d. Recognizing your destination upon arrival
e. Finding your way back

21.3.1.2 Wayfinding systems and interior signage should be designed to help patients and visitors find their way from their entry point in the building to the services and departments they need, directly and without confusion. A sign hierarchy consisting of the following types, shall be considered, depending on the facility size:

a. Main directory
b. Orientation maps
c. Secondary directories
d. Directional signs
e. Department identification signs
f. Room identification signs
g. Maintenance identification tags
h. Information, regulatory and code signs, to include fire evacuation signs
i. Elevators and stairs
j. Distribution Zone Identification

21.3.2 Flexibility. The signage system must be flexible and adaptable as room functions change, to preclude the user from being required to purchase new signs every time a room or department changes or relocates within the facility. Changeable inserts may not always be the most user-friendly means to accommodate functional flexibility for signage. Signage systems that provide another means of accommodating changes (flip-up sections, entire cover removable, etc) should be investigated.

21.3.3 Installation and Maintainability. Signage must be able to withstand some degree of abuse from the users of the facility. Minimize systems which use components that can be removed without special tools. Signs must be installed in such a way that they are permanently attached to the substrate, yet capable of being removed without requiring significant wall repair after removal of the sign. Limit the use of double-sided adhesive mounting directly to walls/substrates. A Plexiglas wall mounting plate may be provided in lieu of double-sided adhesive.

21.3.4 Signage Types.

21.3.4.1 Main Directory. Once inside a building, the first requirement for directional signs is to orient a person to the building in general. A directory located just inside the lobby usually serves this purpose. Building directories and, if required, accompanying orientation maps for the medical facility, shall be developed jointly by the design team and the Using Agency. An overall building directory should be placed at each major patient and visitor lobby area. All major departments and services shall be indicated. Directories may be free-standing kiosks if they become more visible to people who might be entering from various directions within a lobby area. Lettering on directories should be secure and easy to change, yet present a professional appearance.

21.3.4.2 Orientation Maps. If orientation maps are required, they shall be part of the interior signage package and provided by the same manufacturer. Orientation maps shall be positioned so that building left is viewer left. Include a “You Are Here” reference to assist the viewer with orientation. Identify locations of the emergency department, public toilets, public telephones, information, and parking areas on the orientation map. Use international symbols where appropriate. North arrows shall be provided on all orientation maps.

21.3.4.3 Secondary Directory. Smaller, less comprehensive directories shall be used in less important areas, such as at elevator lobbies, on upper floors or at secondary entrances.

21.3.4.4 Directional Signs. Once a person has used the directory and decided the general direction to go, directional signs must guide individuals through decision points and to their final destination. Directional signs must also guide a person from their destination back to their starting point. As with exterior signs, left-pointing arrows shall be placed at the top, up-pointing arrows next, and right-pointing arrows at the bottom. All characters and directional arrows should be easily changeable to provide for future department relocations. When pictographs are used, the pictograph shall be shown to the left of the message. Where a floor level designation is used, it shall be at the top of the sign panel. Include "Staff Only" and "No Entry" signs at appropriate entrances where only medical staff is authorized.

21.3.4.5 Department Identification Signs. Design signs to identify activities for individual departments and rooms. Provide large, easy to read signs over reception counters, check-in counters, information desks, and departments. Signs shall be either ceiling mounted or affixed to a soffit directly above the counter. Locate department identification signs along main corridor paths, rather than within waiting areas, so they are visible to persons prior to arrival at the department. Lettering on overhead suspended or projected department identification signs shall be minimum 75mm. Department identification signs must be sized such that all lettering is clearly visible to users from the intended viewing distance. If signs are mounted perpendicular to corridor walls, assure that emergency exit signs are not obstructed. Identification signs may also include a pictograph and room designation on a header panel, to provide added emphasis to the message. To be effective, the pictograph must be an easily recognizable graphic. The message would then be placed on the insert panel.

21.3.4.6 Room Identification. All rooms shall be identified with a permanent message that includes the user room designation in raised letters and Braille. Use of personal names on interior signs is discouraged; however, if names are required, they must be provided using a changeable message strip. Design patient room identification signs to include the room designation on the header panel, with insert panels for information signage such as “Oxygen In Use”, “Isolation”, and “No Visitors”. Consider including designating patient vs. staff toilet room messages. Include additional blank inserts for staff-defined messages as may be required due to the unique conditions of a patient. User room designations and messages are to be left justified on signs, i.e. flush left.

21.3.4.7 Maintenance Room Numbers. Room number tags shall be included for every room, space, alcove, closet, toilet, patient room, etc to assist maintenance staff. These tags shall be approximately 25mm high with the room number used on the architectural floor plans. Raised characters are preferred to inscribed characters to prevent obstruction following door frame painting. The tags shall be installed on the outside of the room, on the top center of the door frame, or on the strike side of the door, if neither side is clearly outside. These tags are not required to be in Braille. Recommend including in the signage specification.

21.3.4.8 Information, Regulatory and Code Signage. These signs provide messages that aid in the daily transaction of business and provide regulations for health and safety. Use these signs to fulfill

requirements of OSHA, accessibility and Military Department safety standards. Keep the messages on information signs simple. Use of pictographs to aid in understanding messages, is encouraged where feasible. Interior stairway signage shall comply with National Fire Protection Agency 101, Life Safety Code. Clearly define all doors within a stairway that do not lead to an exit with signage that states, “Not an Exit”. Exit doors shall be identified with tactile signs. The design and location of emergency egress route/fire evacuation signs shall be coordinated with the local fire marshall. Criteria for emergency exit signs is found in Section 10.

21.3.4.9 Distribution Zone Signs. Facilities which utilize the Integrated Building System (IBS) distribution zone concept (see IBS section) shall include column markings within these areas to assist maintenance staff. IBS signs shall be clear aluminum, approximately 300mm by 400mm in size. The signs shall be printed with the column designations that appear on the structural drawings, the level designation, building wing or block designation and compass direction as it appears on the drawings. Lettering shall be approximately 40mm in height, and in a contrasting color from the background. Reflective lettering may also be considered. In addition to column signs, clearly identify the exit routes within these utility areas. These signs are not required to include Braille.

21.4 Room Designation Systems. Room designation for spaces within a medical facility shall be developed jointly by the Using Service and the design team. Provide a simple, clear and comprehensive scheme of user room designations. User room designations shall be different from the architectural room numbers, which are used for the maintenance room number tags defined above. For medical facilities, rooms with audio-visual nurse call systems using a digital paging system, are required to have a unique user designation, so staff can easily know exactly to which specific room they are to respond.

21.5 Sign Making Equipment. Requirements for sign making equipment or software shall be determined jointly by the Using Agency and the design team. If sign making equipment is to be provided, the equipment shall be included in the construction contract.

21.6 Signage User's Manual. A signage user’s manual shall be developed. Signage provisions shall be presented in booklet form, categorized by sign types. Each signage category shall include drawings, details and technical specifications. This manual will be the guide for alteration, expansion, and purchase of additional signage, without reissue of the entire package during operation of the medical facility. Upon completion of the project, signage materials and the user manual will become the property of the medical facility, for maintenance of the system.

21.7 Existing Construction. Where projects involve the addition, alteration or upgrade of an existing medical facility, an analysis shall be made of existing site and building traffic patterns to determine whether the existing signage system requires modification. Existing signage systems shall be extended to building additions, where feasible.

21.8 Design Submittals. Signage schedule (exterior, directional, and room signs) shall to be provided in electronic spreadsheet format. Schedule shall include the architectural room number, user room designation, type of sign, message, symbol (if needed), color, and mounting location.

REFERENCES

21a. Americans with Disabilities Act Accessibility Guidelines (ADAAG), January 24, 1992

21b. Fed Std 795, Uniform Federal Accessibility Standards (UFAS), April 1, 1988.

21c. Department of Transportation Signage Standards

SECTION 22: FOOD SERVICE

22.1 INTRODUCTION. This Section furnishes general direction for development of food service systems in both new and existing health care facilities. Past experience of military department consultants and post occupancy evaluations has been included in this criteria with the goal of minimizing errors on future projects.

22.2 SYSTEM CONCEPT. The Using Service in accordance with specific project requirements will determine the food service system concept. The system concept should be carefully planned with the end user to ensure that the proper system is designed and constructed. Care should be taken to include issues that directly impact on system functionality. These issues include labor, prime vendor, and the FIVE M's of food service: Menu, Market, Money, Management and Method of execution.

22.3 CONSULTING SERVICES. The designer will provide the services of a qualified food service consultant. A qualified food service consultant is a professional whom the North American Association of Food Equipment Manufacturers and/or Food Service Consultants Society International recognizes as a Certified Food Service Professional. The food service consultant will coordinate the functional and equipment design and will obtain guidance from the Using Military Department and their consulting agencies. The food service consultant must follow the basic principals of design which are flexibility, modularity, simplicity, flow of materials and personnel, ease of sanitation, ease of supervision, and space efficiency. The food service consultant must also design for human engineering. Issues include temperature and humidity of the workplace; properly sized work centers; properly designed equipment; material handling equipment; adequate lighting, noise, and the Americans with Disabilities Act. Finally, the end user must emphasize requirements while reducing unreasonable requests that cannot be supported by the project budget or facility strategic plan.

22.4 FOOD SERVICE OBJECTIVES.

22.4.1 Food service design will be based on the following objectives:

22.4.1.1 To provide a functional and aesthetically pleasing nutritional care facility for patients, service members, staff and guests, within budgetary guidelines.

22.4.1.2 To design dietary facilities to maximize performance from personnel, facilities and equipment while producing high quality nutrition care products.

22.4.1.3 To design a food service system with the ability to adapt readily to changing missions, requirements, food preparation processes, labor conditions and equipment technology. This is an objective that requires forethought from the service component, end user and food service consultant. Often the easiest methods of building in flexibility to a design is planning additional electrical capabilities, incorporating dual use equipment, including modular equipment that can be broken down by the facility management branch or end user and reconfigured.

22.4.1.4 Provide high quality food service equipment that is manufactured in the United States, sized to accommodate the maximum capacity of the facility at time of design. Food service equipment must meet National Sanitation Foundation (NSF) standards for acceptance. Equipment should be dual functional if possible. Electric equipment must be Underwriters Laboratory approved. Gas equipment must be American Gas Association (AGA) approved. Foil labels for both of these authorities shall be mounted on the

equipment items for easy identification. Finally, standard, readily available food service equipment should be planned as much as possible. Custom fabricated equipment should be limited to the servery, walk-in refrigeration and space restricted pieces of equipment only. Cost savings are a direct result for including more stock equipment over custom equipment. (See Section 16, Equipment, for additional guidance.)

22.4.2 Four food service systems will constitute the physical planning basis.

- Conventional Food Systems
- Convenience Food Systems
- Cook/Chill Food Systems
- Cook/Chill/Freeze Food Systems (also termed the Cook/Freeze or Ready Food System)

It is also very common to provide a combination of Conventional and Convenience Food Systems within the same facility. Recent history dictates that some consideration must be made to construct facilities that are easily converted from conventional food service production to a mix of conventional and convenience food service systems. Emphasis on walk-in freezers and rethermalization equipment is essential to a smooth conversion. Over time food service systems evolve in size and scope. Care should be taken to build in flexibility and modularity of food service equipment and physical plant design.

22.5 CONVENTIONAL FOOD SYSTEM. With a conventional system, foods are prepared from basic ingredients with full range of processing done on the premises. Foods are prepared and then maintained at appropriate serving temperatures until served; thus foods are prepared as near to meal times as possible (See figure 22.1).

CONVENTIONAL FOOD SERVICE FLOW DIAGRAM

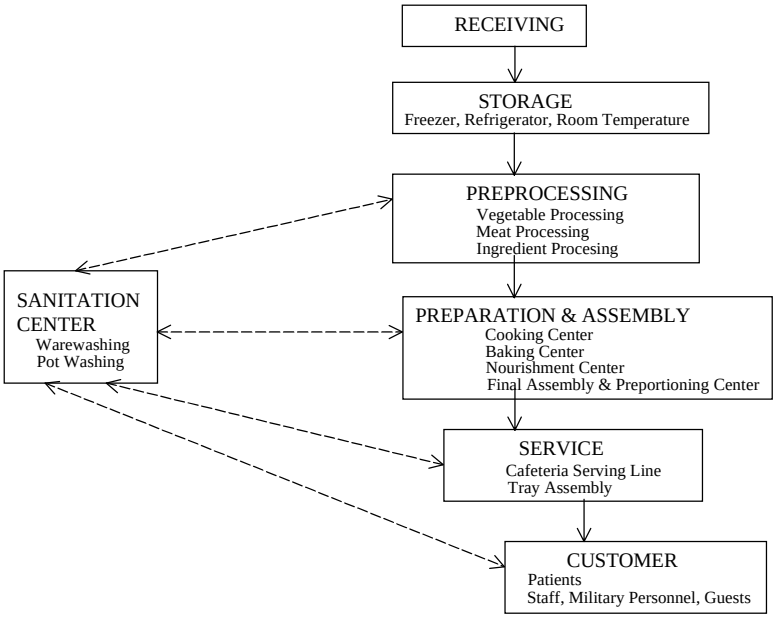

Figure 22-1: Conventional Food Service Flow Diagram

Conventional Food Systems are equipped with full service bakery, salad and sandwich preparation areas. Current studies show that temperature controlled cold rooms (50 F) are ideal for preparing cold salads, sandwiches and breaking down meat into meal quantities. Hazard Analysis and Critical Control Point (HACCP) studies show that food borne illness is decreased due to the increase of food safety created by the refrigerated food preparation environment. Butcher shops complete with meat saw and grinder, are not needed in most facilities. The salad/sandwich preparation area should be designed so that finished food products can be moved easily into a walk-in refrigerator that safely stores the items at or below 40 F. Coordinate table top equipment items with specific facility requirements.

22.6 CONVENIENCE FOOD SYSTEM. With a convenience system almost all foods utilized are fully prepared foods purchased from outside sources and properly stored. Some in-house cooking and/or preparation will supplement purchased prepared foods (salads, vegetables, etc.). The prepared foods are subsequently brought to their appropriate serving temperatures on the premises as near to meal times as possible and maintained at these temperatures until served. Today many food services are using different forms of convenience foods that require extensive rethermalization equipment units that also double as a holding unit, thereby increasing the flexibility of the equipment item. Refrigeration and freezer space is also an important consideration. Space for these units should be calculated at 0.014 cubic meter per meal served per day. This figure also depends on prime vendor delivery and should be significantly increased if deliveries are not scheduled at least three times per week. Material handling equipment and

aisle space is important when designing a convenience food system. Flow of personnel and food product is a strong consideration in designing a convenience food system.

22.7 COOK/CHILL FOOD SYSTEM. With a cook/chill system, foods are prepared from basic ingredients with the full range of processing done on the premises. Foods are prepared, appropriately packaged, then quick chilled and stored under refrigeration. The prepared foods are subsequently brought to their appropriate serving temperatures as near to meal times as possible and maintained at these temperatures until served.

22.8 COOK/CHILL/FREEZE FOOD SYSTEM. In a cook/chill/freeze system (cook/freeze or ready food), foods are prepared from basic ingredients, and all processing is done on the premises. Foods are prepared, appropriately packaged, then quick chilled or quick frozen. Currently, there are two methods of quick chilling: “Blast Chilling” and “Water Bath Chilling”. Blast Chilling requires extensive refrigeration infrastructure, which must be considered and carefully planned. The water bath chilling method also demands extensive planning and a chilled water system from the physical plant. If a chilled water system is not available a “ice builder” which supplies ice water for chilling must be integrated into the plan at great expense and space. These methods of food service are complex and require extensive planning from specialized consultants with a proven track record of success. Equipment issues include: mixer kettles, pump and fill stations for Cryovac food processing, cook and chill tanks, tumble chillers for water bath chilling, casing (Cryovac bags) conveyors to move heavy food containers. The prepared foods are brought to their appropriate serving temperatures as near to meal times as possible and maintained at these temperatures until served (See figure 22-2).

READY FOODS SYSTEM
FLOW DIAGRAM

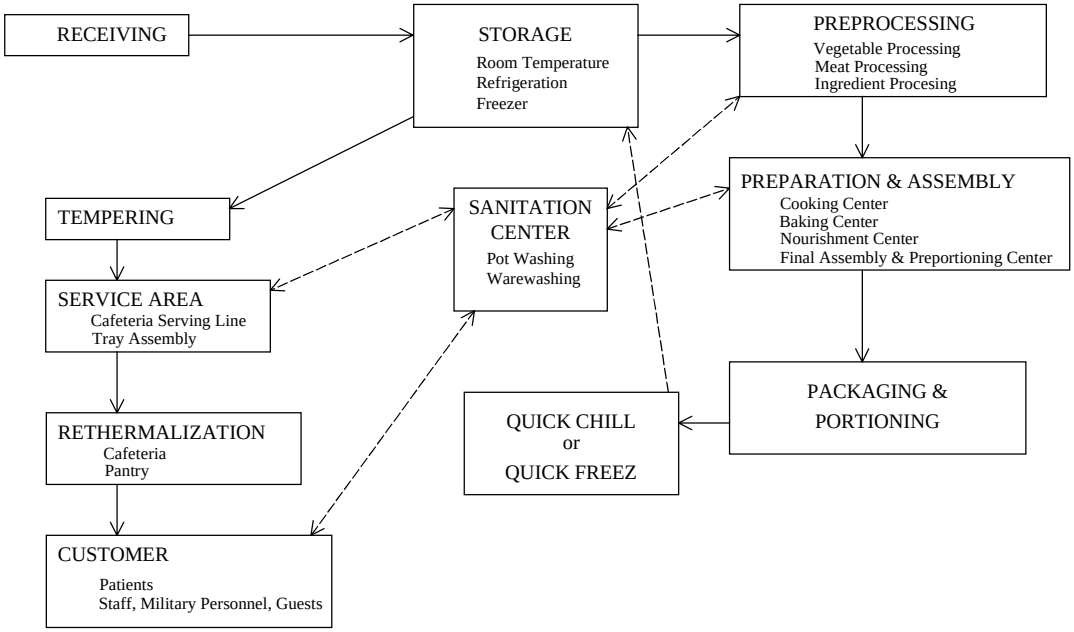

Figure 22-2: Ready Foods System Flow Diagram

Heating equipment should be flexible and perform holding functions in addition to rethermalization duties. Timers that heat food until “just done” and then hold food at a safe temperature should be included into planning of these systems.

22.9 PLANNING CRITERIA.

22.9.1 Food service design will provide for the movement of food products (raw, in process or finished), warewashing, patient tray carts, employees and ambulatory patients in a manner that will minimize cross traffic, backtracking and queuing conditions.

22.9.2 Planning principles that will be considered for food service system design are as follows:

22.9.2.1 All food storage, preparation, servery, assembly and sanitation operations will be located on a single floor. The general configuration of the food service operation will be rectangular.

22.9.2.2 The food service area will be in proximity to an independent covered food delivery entrance. If a loading/receiving dock is required, it shall be equipped with dock levelers to adapt to delivery trucks of varying heights and sizes. A stairway from the dock to the driveways shall be provided. The receiving area will include a platform scale with two digital readouts, one located at the receiving point, with the second located at the

receiving office. The receiving area will not be accessible from outside of the building.

22.9.2.3 The food service operation will be located in vertical and horizontal proximity to the maximum concentration of patients and to the staff cafeteria. All refrigerators and freezers will be connected to a single control panel with temperature readout. All refrigerators will be fitted with a visual and audible alarm that annunciates in the food service department. An alarm annunciator in the facility management control room is also suggested. All refrigerator systems shall be equipped with temperature gauges located at the outside entrance of the walk-in unit. Compressors shall be located in close proximity to the refrigeration's systems, in a ventilated room with a floor drain and hose bib. See Section 8 (HVAC) for ventilation criteria. Compressors shall be labeled as to which refrigeration unit they service. When using chilled water backup, a redundant pump should be included to avoid refrigeration and freezer compressor damage and food product loss. All refrigeration and freezer units shall be placed on the equipment emergency power system to provide department functionality during periods of crisis. See Section 10 (Electrical) and Appendix A for emergency power requirements.

22.9.2.4 Food preparation work centers will be located to minimize traffic from storage areas (ingredient issue room, dry storage and refrigerated storage), servery, cafeteria and tray assembly and sanitation warewash centers.

22.9.2.5 The patient tray assembly area, with appropriate serving equipment, shall be located adjacent to both hot and cold work centers. If hot food is served from the patient tray assembly, equipment will be arranged so hot food is placed onto patient trays last. In some large facilities a griddle with ventilation may be needed. Patient tray cart storage will be located adjacent to the patient tray assembly area. There will be a direct route from tray assembly to service corridors and/or elevators and to patient care areas. Dedicated elevators will be provided to food service in large medical centers. Depending on the cart delivery system, the reconstituting of patient food may be accomplished at the patient care floor nourishment center. Current practice is to serve patient food directly from a cart with a tray of food that has already been assembled and portioned. Patient tray assembly areas should also include some type of energy distribution system that provides flexibility to the end user. The design should also include pass through warmers and refrigeration to ease bulk food movement. Beverage islands should be planned and should include a water source, electricity, and an underfloor installation of a 100mm (minimum size) Polyvinyl Chloride conduit for "piggy-back" soda and juice fountains. The tray line itself should be flexible to decrease or increase trays without extensive infrastructure requirements. Electrical outlet drops should also be planned from the ceiling for versatility of tray line reconfiguration.

22.9.2.6 Dishwashing and warewashing (pot washing) will be designed to prevent crossing workflows between soiled and clean wares, and service and food preparation areas. Mechanical washers will be supplemented with compartment (three compartments minimum) sinks. All dishwashers will be equipped with blow-drying feature. All ware washers and pot and pan washers shall be installed with a condensation hood designed to remove hot moisture laden air. Special care will be taken to provide ware washers that pre-wash at 100 - 120 F, wash at 140 - 160 F, rinse at 160 - 180 F, and final rinse at 180 - 195 F. If low Temperature ware washers are used, they must be designed to dispense a chemical sanitation agent. Problems with environmental issues may out weigh the benefits of this type of ware washer. The design must include floor drains in the ware washer center, located to

directly service the piece of equipment requiring a drain. Minimize runs of piping from equipment to drains. Cart washers and can washers may be included in some large medical centers. If cart/can washers are provided, planners should consider water supply and drainage in these areas.

22.9.2.7 Telephones with speaker/microphone features are required throughout the food service department (offices, tray assembly, serving lines, storage and receiving areas). Coordinate telephone requirements with Section 11 (Communications), table 11-4. Voice and Data outlets are required in all office areas and at each cashier station. Hands-free intercom features are required in all offices, at each cashier station and at patient tray assemble workstations. A class B telephone line (post or base only capability) should be included in the dining facility for medical staff paging responses.

22.9.2.8 A toilet/shower/locker room shall be provided for the dedicated use of the nutrition care staff. Access to these rooms shall be from within the food service department only.

22.9.2.9 Dietary trash and waste handling requirements must be considered in conjunction with the total health facility waste handling requirements to minimize duplication of facilities (see Section 18 Waste Management). Dining, food preparation, servery and processing areas will be designed to avoid transporting trash through food handling and/or preparation areas for disposal. Waste pulping disposing systems will be provided to minimize the volume of solid waste product disposal. Recycling areas shall be provided within the food service department for separating and recycling of cardboard and plastics.

22.9.2.10 All point of sale equipment (cash registers and their interconnected Personal Computer) shall be on emergency power. See Section 10 (Electrical) and Appendix A for emergency power source requirements. Equipment shall be evaluated for inclusion on the emergency power system to assure food service operations are not impacted by loss of power. If gas and steam equipment is provided, verify its electrical needs to assure that adequate emergency power is available to maintain these items in operation. Some cooking equipment must not run if exhaust hoods are not operating, therefore, confirm emergency power to exhaust hoods is also provided, where required. Lighting within the food service areas must be at an acceptable level so continued food service operations can occur under emergency conditions. Provide a dedicated electrical supply for the cash register system. Provide conduit runs from each cashier station to the office which will house the managers’ computer workstation. The cash register electrical power system shall be on emergency power.

22.9.2.11 Where gas and direct steam are locally available, a mix of gas, direct steam and electric equipment will be utilized. Care must be taken to minimize the use of electric equipment when gas and/or steam is available. The use of gas and/or steam equipment provides a significant cost savings that should be considered when planning utilities in the food service area.

22.9.2.12 Portable equipment (locking casters, quick disconnects, cords and plugs) will be utilized to the maximum extent possible (production, serving and assembly areas). When portable equipment is not possible, wall mounted equipment (i.e. kettles, trunnions) will be used. Equipment will not be installed on raised bases. When wall mounted or cantilevered equipment is used, adequate wall backing and bracing must be detailed in the contract documents.

22.9.2.13 Where steam operated equipment permits direct contact between food and steam, intermediate steam shall be generated directly or

indirectly, for example, using a plant-steam to clean-steam heat exchanger. Steam must be considered sanitary and/or “clean”. The steam must not contain any chemical contaminants associated with descaling agents, which extend boiler life but pose significant health problems.

22.9.2.14 All storage areas (dry, refrigerated, and frozen) will be equipped with shelving systems appropriate to the application and to maximize space utilization. The use of high density or track shelving shall be considered to expand storage space and maximize the storage area. Shelving shall be finished with galvanized steel, zinc coated carbon steel, and chrome plated carbon steel or extruded aluminum. The style of shelving largely depends on the application of the shelving. Louvered and open wire shelving are most commonly used in walk-in refrigeration to encourage air movement. Dry storage areas often feature solid or embossed shelving for their strength and ease of cleaning.

22.9.2.15 All handwashing sinks shall have “hands free” operation (wrist, elbow, knee, or sensor operated). Sensor operated is preferred, however, material cost and maintenance costs must be evaluated before this type of fixture is used. If sensor operated is determined appropriate, the fixture must include a manual override. Wall mounted towel dispensers and waste receptacles will be provided in immediate proximity to each sink unit. Coordinate requirements for liquid soap dispensers with the facility user as these may be provided under a vendor contract.

22.9.2.16 Food Services will be designed to comply with Joint Commission Standards for Care of Patients, the National Sanitation Foundation Standards, and TB MED 530.

22.9.2.17 Cafeteria serving areas will be designed to accommodate a la carte pay pricing policies. Plan servery to serve large volumes of customers at one time. A scatter, hollow square or scrambled servery design should be included in all ala cart facilities. Cashier and serving stations and salad bars will be designed with tray glides for customer ease of movement. The design must allow for generous queuing room at the cash register stations. Beverage stands should be supplied with the following: water source, piggyback soda fountain conduit, steam (if available), ample electricity for expansion, and adequate drainage. Serving stations for breads, desserts, and short order cooking require extensive planning with the end user.

22.9.2.18 All kitchen exhaust hoods must be factory fabricated. Field fabricated hoods must not be used, as quality standards are inconsistent. All kitchen exhaust hoods will be designed to be self-cleaning. Kitchen ventilation shall be designed to provide the end user with adequate hoods to accomplish exhausting requirements. Care must be taken to increase ventilation capability when deep fat fryers and charbroilers are planned. Refrigeration equipment must not be planned under kitchen ventilation systems unless it is incorporated into a piece of cooking equipment.

22.9.2.19 Finishes throughout Food Service shall comply with Appendix A. Corner guards, wall guards and steel kick plates for doors should be planned liberally throughout the kitchen. Cart wash areas and dish machine areas should be finished for wet environments. Floors shall be finished with quarry tile for durability and resistance to moisture. Most quarry tiles do not require sealing. Care must be taken when preparing the contract specifications to not require sealing of quarry tile, which could produce a slipping hazard to staff. Quarry tile grout may be integrally colored to present a uniform color of the floor plane. Corridor floors should be finished in vinyl tile, with a polished finish. Dining areas and offices should be finished in carpet. The carpet shall be a commercial

grade, with stain and fade resistant properties, and include an anti-microbial feature.

22.9.2.20 Space shall be provided for automatic data processing operations and equipment that are components of the food service department. Space for a floor safe shall also be included within the food service department.

22.9.2.21 If the medical facility utilizes an information system or other interdepartmental system (i.e. automatic writing transfer equipment), food service shall be linked to this system. Any and all Nutrition Management Information Systems will be connected to the hospital information management computer room.

22.9.2.22 Equipment in nourishment pantries shall be included on emergency power. See Section 10 (Electrical) and Appendix A for emergency power requirements. Include the following equipment on the equipment emergency power system: ice machine, microwave oven, and refrigerator/freezer. The service pantries will be designed to provide 24-hour access to the ice machine and refrigerator/freezer. Food cart storage will be adjacent to 24-hour access areas, but shall be designed so that they can be secured. Coordinate requirements for full service pantries with the facility user. Provide a small area to rethermalize foods and maintain refrigerated food items. A sink, drinking water and ice source should also be planned in these areas.

22.9.2.23 A lockable refrigerator will be provided in a controlled, secure area within the Department of Nursing for storage of emergency late meals (patient and/or staff night suppers).

22.9.2.24 Grease traps, when utilized, will be located outside the buildings. Grease trap access should be planned so that cleaning is easy to accomplish. Coordination with local environmental regulations is required.

22.9.2.25 All openings or penetrations of any horizontal or vertical finish surface must be thoroughly sealed so as not to provide hiding places for vermin or encourage the growth of bacteria. Sealant must be water and detergent resistant silicone.

22.10 FACILITY DATA REQUIREMENTS FOR FOOD SERVICE. To assure an accurate design is prepared, facility and patient data will be provided by the using service to the designer and the food service consultant as follows:

- The number of hospital beds.
- Pantry requirements.
- The required number of dining rooms meals.
- Vending requirements.
- The number of male and female dietary employees.
- Staffing projections per shift in critical areas (warewashing, tray assembly, cafeteria service)
- Peak Meal
- Service Style
- Meal hours and peak hour
- Percent of take-out meals

22.11 SEISMIC CRITERIA. The planning, selection and installation of food service equipment will be carefully considered with regard to potential damage by earthquakes. Special attention will be given to the mounting of fixed equipment, to utility connections and to the design features of selected equipment. The required seismic protection will depend on the seismic design level prescribed for individual projects. All bracing

details for food service equipment shall be indicated on the contract documents. See the Seismic Section for additional requirements.

22.12 FOOD SERVICE EQUIPMENT SPECIFICATIONS. All contractor provided food service equipment items identified on the contract drawings shall be specified in detail. The latest technology shall be specified. All equipment shall meet Environmental Protection Agency standards where required. All equipment shall be specified to meet NSF, UL and AGA standards. As a minimum, each equipment item shall be specified to include the following:

22.12.1 Applicable codes, standards and references

22.12.2 Joint Schedule Number (JSN) identifier

22.12.3 A requirement to provide Operation and Maintenance Manuals

22.12.4 Materials, components, colors and finishes

22.12.5 Any optional features or devices selected by the using military department

22.12.6 Full and complete description of the item, including all salient features

22.12.7 Structural and seismic requirements, including backing, kits, etc

22.12.8 Complete utility requirements (steam, water, electric, gas)

22.12.9 Complete installation instructions

22.12.10 Testing and inspection requirements

22.12.11 Training requirements

22.12.12 Submittal requirements, including layout and installation plans; components, materials, colors and finishes; and full description of any optional features or devices

22.13 FOOD SERVICE DRAWINGS. Contract drawings shall indicate a mounting height for all wall hung equipment items. Provide complete mounting details, including type and location of backing or blocking, for all wall mounted equipment. Details shall be provided for equipment that is contractor furnished-contractor installed, government furnished-contractor installed, and government furnished-government installed.

SECTION 23 – ACOUSTICS

23.1 GENERAL ISSUES

23.1.1 Introduction. This Section deals with guidelines, criteria, and general approaches to sound problems in military health care facilities. This information is designed to help a design professional or facility program manager understand some of the causes of sound/noise problems, and the tools that are available to address them. The section covers General Issues (definitions and metrics, sources and receivers), Sound Isolation (separation of sound and speech privacy between spaces), Room Acoustics (control of noise within spaces), Mechanical System Noise and Vibration Control, and Implementation Guidelines (integration and execution of acoustics through planning, design, construction, and post-construction phases of a project). Additional requirements and design guidance relating to acoustical design is contained at Section 8 (HVAC) and Appendix A of this document.

23.1.2 Analysis

23.1.2.1. Problems covered. This section is directed to acoustics problems in health care facilities such as speech privacy between offices, sound isolation between patient rooms, proper level and character of ambient (background) sound in rooms, control of noise and vibration from mechanical equipment in buildings, good hearing conditions in public spaces, and general noise control in work environments.

23.1.2.2. Problems not covered. This section does not address advanced acoustics problems such as performance spaces (e.g., lecture rooms, cinemas or theater), specialized laboratory or meeting spaces (e.g., wind tunnels, animal research facilities, video teleconference rooms), or highly vibration-sensitive equipment (e.g., electron microscopes, laser surgery).

23.2 SOUND ISOLATION.

23.2.1 Introduction. Sound isolation is important in military health care facilities in order to provide privacy for sensitive conversations, comfort for patients, and isolation of annoying and loud sound levels from equipment. The STC rating of various constructions (grouped components making up partitions, doors, windows, floors, etc) which define a space, and Flanking Sound Transmission are two important variables having the most impact on sound isolation, and which must be consciously controlled by the medical facility designer.

23.2.1.1 Sound Transmission Class (STC). STC is the standard single-number measure of the ability of a material or construction system to block sound. STC values are used in this section to determine suitable design. STC is derived from Transmission Loss data measured in a controlled laboratory environment. A higher STC number indicates better sound isolation. STC values can range from STC 0 (block no sound) to STC 70 or higher (almost no sound gets through), but in practical terms, general constructions in most buildings range from STC 30 to STC 55 or so. Because STC ratings are determined from laboratory tests, they eliminate variations that would be related to field installation factors such as size of room, room absorption, edge conditions, sound leaks, quality of workmanship, and such. Minimum STC ratings for the envelope components of each room are listed in Appendix “A”. These minimum ratings are intended to assist the medical designer, who will utilize them along with professional judgement, in providing the amount of privacy required.

23.2.1.2 Flanking Transmission. Flanking sound paths are sound paths that go from one space to another by secondary paths, not through the primary wall or floor. Flanking paths can be through a corridor, laterally through a roof or floor plane, and through gaps and cracks in construction. Figure 23.2 and 23.3 indicates transmission paths and some example construction options the medical facility designer should consider when providing for various levels of sound isolation for adjacent spaces.

23.2.1.3 Other terms. Other terms pertinent to sound isolation review are defined in appendix "E".

23.2.2 Constructions. This section describes different construction types and explains how they can be evaluated for their ability to block sound.

23.2.2.1 Partitions. The medical facility designer should provide partitions which meet the requirements found in appendix A. A large amount of material is available from suppliers which provide examples of standard wall assemblies and list the associated STC ratings. Typical single layer gypsum partitions for steel framing (with wall boards staggered) normally can achieve an STC rating of 40, however with the inclusion of glass fiber in the wall cavity the STC ratings increase to around 47. Double layer gypsum partitions have STC ratings ranging from 46 (without cavity bats) to around 53 (with cavity bats), both having base layers vertical and face layers horizontal, with joints staggered). All STC ratings are verified with an associated test number.

a. Acoustical Insulation: Lightweight porous fibrous insulation can be a glass fiber or a mineral fiber batt. At least one side of the insulation should be unfaced. The density of the insulation should be around 24 to 64 kg per cubic meter (1 to 3 pounds per cubic foot). Careful consideration should be given to limiting the use of fibrous insulation in partitions where flexibility is a concern; the insulation could hamper the ability of adding or relocating plumbing, voice/data outlets or electrical outlets in the future.

b. Flanking transmission: The most common flanking paths at partitions are the joints between the partition and the adjacent floor, wall, and ceiling elements. To achieve the full sound isolating capabilities of a partition, be sure details are provided for continuous beads of sealant at the floor and ceiling joints of the partition (Figures 23.1 and 23.3).

c. Recessed services: Where service elements (e.g., electrical outlets, telephone or data plugs) are recessed into sound isolating partitions, as will often occur, they should be backed or encased with gypsum board, plaster, or other impervious material equal to the surface weight of the partition. Designers should provide appropriate details in design plans.

d. Surface mounted equipment: Vibrating equipment (such as medical instruments with electrical motors), should not be mounted on wall surfaces adjacent to acoustically sensitive spaces.

23.2.2.2 Ceiling Systems. The medical facility designer shall take into account that ceiling systems are critical factors in sound isolation when wall constructions do not extend to the floor above. Sound isolation through an average suspended mineral fiber acoustic tile is seldom greater than STC (or CAC) 35 to 39. Glass fiber acoustic tile ceilings are far worse, with STC or CAC ratings less than 25. Sound travels through the ceiling, into a common

plenum, and then into neighboring spaces through the ceiling again. These ratings are often further degraded by return air slots, registers, and grilles, and recessed light fixtures with openings to a return air plenum. The medical facility designer shall evaluate the following elements with respect to providing required sound isolation:

a. Ceiling/wall joint: A continuous, suspended ceiling system should not extend over adjacent acoustically sensitive spaces that require confidential speech privacy, such as examination rooms. The ceiling system should be cut or interrupted at the line of the intervening partition.

b, Plenum barrier: To minimize sound transmission between acoustically sensitive spaces, a sound isolation barrier should be provided in the plenum space between the suspended ceiling and the underside of the structure above, following the line of the partition below and extending along perpendicular walls as well. The plenum barrier must consist of a dense, impervious material such as gypsum board, but need comprise only one layer of gypsum board. Superior to this construction is a full-height slab-to-slab partition system wherever possible. See construction type #1 in Figure 23.3.

c. Insulation on top of the partition: When a construction, slab to slab barrier is not provided, the medical facility designer shall consider insulation on top of the partition. In order to improve the sound isolation through the acoustic tile ceiling (that is, to achieve a higher CAC rating), 75mm (3-inch) thick, foil-backed noncombustible blanket of insulation material such a glass fiber or mineral wool may be installed, foil side down, on top of the suspended ceiling system. This blanket should extend 1200mm (4 feet) from each side of the partition below. This acoustical insulation works best when the plenum depth is less than 400mm (16 inches) high. Care must be taken so that moisture is not trapped in the ceiling space and heat dissipation of light fixtures in not impaired. See construction type #2 in Figure 23.3. Disadvantages to this system are that when maintenance operations occur at the ceiling in the future, the insulation is often removed or damaged and not put back in place or repaired properly.

d. Special acoustical tile ceilings: Where plenum barriers and insulation are impractical, the medical facility designer shall consider utilizing special acoustical tile with a higher CAC than standard (35-39). See construction type #3 in Figure 23.43.

e. Solid ceilings: When required to provide the required degree of sound isolation between spaces, and when permitted by Appendix A, a suspended sound barrier ceiling, consisting of a dense, impervious, noncombustible material such as gypsum board or plaster, should be considered.

23.2.2.3 Floors. The type of floor construction used between spaces shall be selected and detailed to achieve the required degree of airborne and impact sound isolation. Airborne and impact isolation provided by a floor system are different characteristics of construction, and each shall be considered separately.

a. Flanking transmission. Typical flanking paths of airborne noise, which shall be evaluated in medical facility design include mechanical and elevator shafts, piping, conveyor, and pneumatic tube penetrations.

23.2.2.4 Doors. Doors (and windows) are usually limiting elements in the sound isolation of a construction system. Typically, since corridors are not used as waiting (or otherwise normally occupied) spaces, the overall STC rating of the corridor door/framing system is not critical. However solid door (leaf) meeting the STC class requirement in Appendix A, shall be provided. Special applications may require very limited undercuts, or possibly gasketing. When a door occurs in a partition separating noise critical spaces, special attention should be given to minimizing the undercut and or gasketing. In other words, in rooms for which full isolation is required, the door should provide the same corresponding degree of sound isolation as the walls, floor and ceiling.

23.2.2.5 Windows. Windows, as doors, are also limiting elements in the sound isolation of a construction system. In the same manner, windows normally are not a major factor unless they are part of a wall construction, which is between two spaces requiring sound isolation. In this case, the medical facility designer shall evaluate the effectiveness of the composite construction (window and wall); see section 23.2.3. In special cases, attention must be given to providing sound limiting window constructions to eliminate outside noise sources. In this case the medical facility designer shall evaluate alternative solutions. In addition, designers shall coordinate with the security considerations in other sections of this document.

23.2.2.6 Operable partitions. The sound isolation provided by operable partitions depends to a great extent upon the effectiveness of the perimeter seals. A good seal is difficult to maintain at the perimeter of these partitions, and the actual sound isolation provided often falls far below laboratory test ratings. From an acoustical standpoint, operable partitions should be avoided where possible.

23.2.3 Composite Construction.

23.2.3.1 General. Composite constructions commonly occur in health care facilities where the intervening construction systems contain doors, windows, and suspended ceilings that have different STC ratings. To achieve the required degree of sound isolation and speech privacy between the spaces, the weighted contribution of each construction element in the system should not be significantly lower than any other. The elements shall be weighted by their STC value and the percent of the total wall area involved. To achieve balanced contribution of sound energy through each element of a composite construction, use the following approximation, based on the relative size of each element.

Area of element relative to total area of wall	Allowable NR (or STC) of element relative to NR (or STC) of wall (dB)
less than 25%	-5 to –7
25% to 50%	-2 to –3
greater or equal to 50%	0

For example, to maintain balanced construction, a door in a partition can have a Noise Reduction (or STC) of 5 dB to 7 dB less than the wall, if the size of the door is smaller than 25% of the size of the wall. If the NR (or STC) of the wall is 40, the NR (or STC) of the interconnecting door should be 33 to 35.

23.2.3.2 Detailed calculation. If the above general guidelines and relationships are inadequate for a pertinent analysis, then use Figure 23.4. for more accuracy. As an example, consider the situation of a partition with a door in it, as in the following computations:

a. Area of Partition: 12.5 feet x 8 feet = 100 square feet
Area of Door: 3 feet x 7 feet = 21 square feet
Therefore, the door is 21% of the total wall area

b. If the STC of the partition is 38 dB, and the STC of the door is 30 dB, the difference between the two STC values is 8 dB.

c, From Figure 23.4, the reduction of the NR of the partition is 5 dB.

d. Therefore the total STC of the composite construction is 38 – 5 = STC 33.

23.2.4 Proposed Ratings and Criteria.

23.2.4.1 Accepted Standards for STC ratings. Constructions should be selected to meet the STC ratings listed in Appendix "A". STC values should be determined for composite constructions. See Section 23.2.3 above. Where partitions do not extend to the structure above, sound transmission through ceilings must be considered in the determination of the composite STC performance. See Section 23.2.2.2 above.

23.2.4.2 Other Design Considerations. Following are pertinent detail issues to address in the design. Detailed discussion of all these items is covered in other parts of this section.

a. Ceilings: Sound transmission through the ceiling plenum by way of the suspended ceiling systems must be addressed through upgrading the ceiling path or with a plenum barrier. See Section 23.2.2 above.

b. Partitions: Include acoustical caulking at the tops and bottoms of partitions. See Section 23.2.2.1.b above.

c. Doors: Interconnecting doors between sensitive spaces should have perimeter gaskets in order to create an air-tight seal. Avoid undercutting or door louvers at these door locations. Sensitive spaces are rooms that require a high degree of privacy, such as interconnecting exam or treatment rooms, or provider offices. See Section 23.2.2.4 above.

d. Equipment noise: Watch for sounds produced by noisy items of equipment in special purpose rooms, where the noise is transmitted through walls and ceilings into adjoining spaces. A notable example is a toilet room with wall-hung fixtures adjacent to a conference room. See Section 23.2.2.1.d above.

e. Cross-talk: Sound can be transmitted through short ventilation ducts with registers in different rooms. See figure 23.7 for suggested duct layout to avoid this problem and as discussed later in this section.

f. Flanking: Sound transfer can easily occur through poorly designed or installed recessed light fixtures in the ceiling, through electrical outlet boxes, or other penetrations located opposite each other on a party wall. See Section 23.2.2.1.b and c, and 23.2.2.2.e.

23.2.5 Structure-borne sound isolation. Structure-borne sound refers to sound whose energy is transmitted directly into and through the structure of a building. The most common single-number rating system to evaluate and compare isolation of impact sound of a floor/ceiling system is the Impact Insulation

Class (IIC) rating system. In terms of criteria, the values are roughly analogous to the STC ratings (that is, if an adjacency requires an STC 40 wall or floor construction, then a similar adjacency probably requires an IIC 40 rating for impact noise).

23.2.5.1 Carpet. With structural concrete floor systems, most structure-borne impact noise can be alleviated with the use of carpet, even a thin industrial carpet. If hard flooring is necessary, try to keep heavily trafficked areas directly above other less sensitive areas that are also heavily trafficked.

23.2.5.2 Carts. Noise sources, such as rolling carts, should have soft rubber wheels to minimize impact noise generation.

23.2.6 Speech Privacy. The speech privacy obtained between spaces depends upon both the sound isolation provided by the intervening construction systems STC and the ambient noise level NC of that particular receiver space. Recommended ambient noise levels and STC ratings are listed, room by room, in Appendix "A". It is important to provide the proper degree of speech privacy between acoustically sensitive spaces, such as doctors' offices and examination/treatment rooms. The approximate degree of speech privacy between spaces can be estimated using the following relationships:

Speech Privacy Rating = STC+ NC

Speech Privacy Rating	Approximate degree of Speech Privacy
55	none
60 to 70	normal
65 to 75	Moderate
70 to 80	Confidential
>80	Complete

The recommended ambient level in an examination room is NC-30 to NC-35, and the recommended isolation between an examination room and private office is STC 45. The sum is 75 to 80 which will provide a moderate-to-confidential degree of speech privacy between the two spaces. If, however, the wall/ceiling construction provided only STC 25 due to an accordion type folding door, or if the background sound level were only NC-20 to NC-25 while the ceiling CAC were only CAC 35, then the STC + NC total would be 55 to 60, which provides a none-to-normal degree of speech privacy. This degree of speech privacy is not acceptable for an examination room.

23.2.6.1 Sound Masking. Speech Privacy Ratings can be boosted when STC ratings are low or background NC levels are too quiet by the addition of background sound masking. This approach introduces low level broadband inconspicuous background sound, like air conditioning noise, at levels around NC-40. This masking sound covers over the intrusion of a neighbor's intelligible speech. The electronic sound is distributed through loudspeakers hidden above the ceiling.

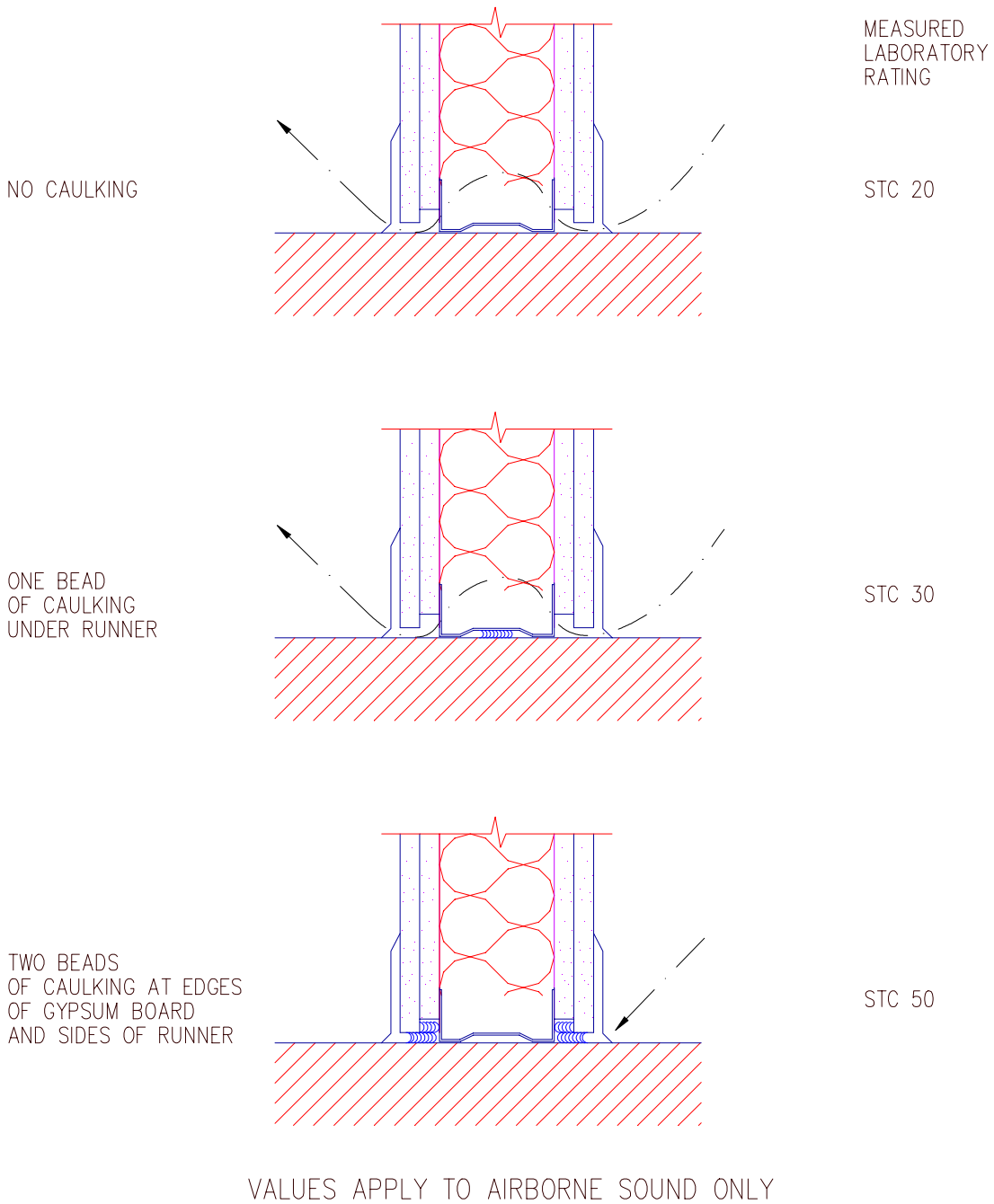

SOUND ISOLATION OF PARTITIONS BY CAULKING

Figure 23.1

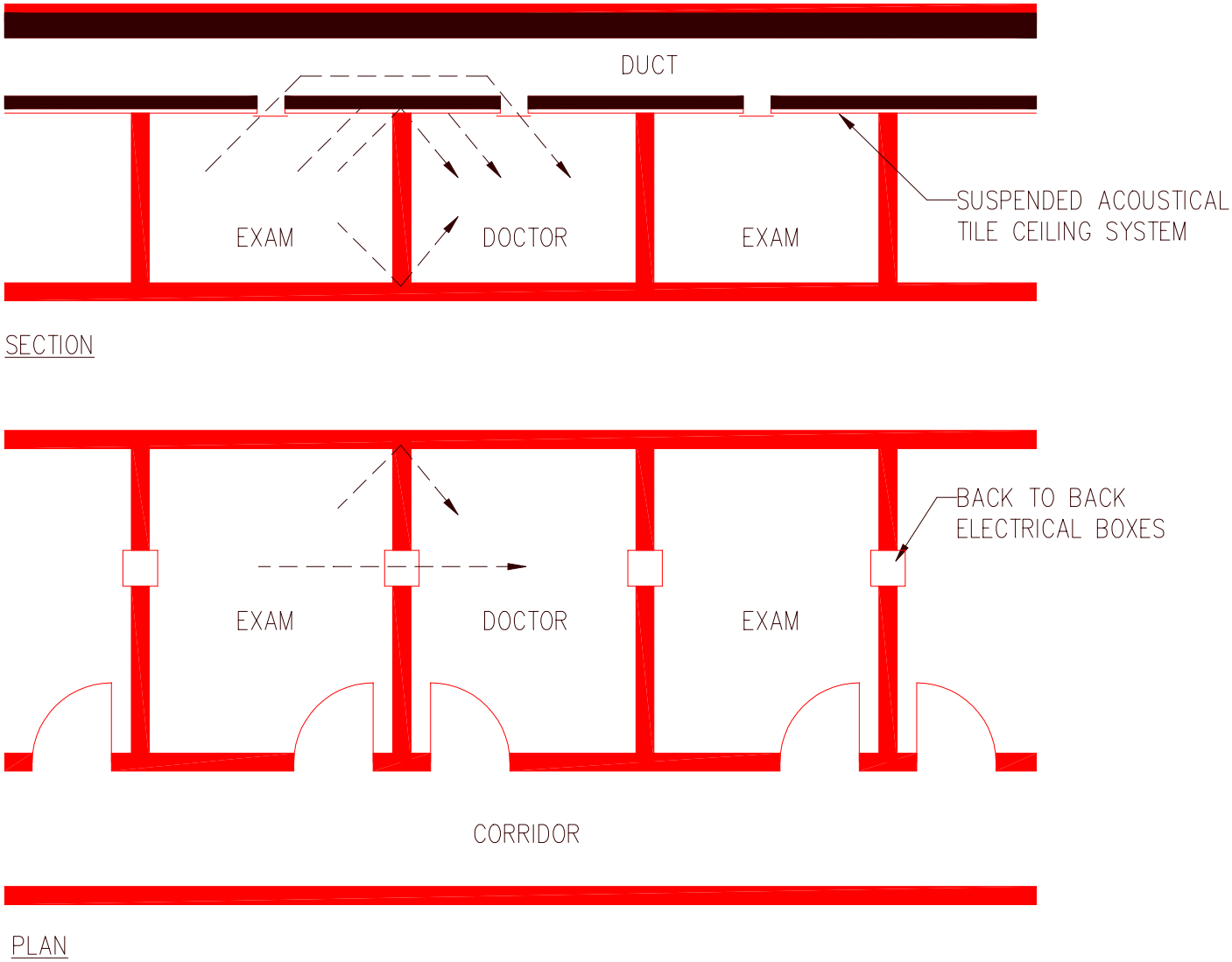

FLANKING PATHS BETWEEN EXAM ROOMS AND OFFICES

Figure 23.2

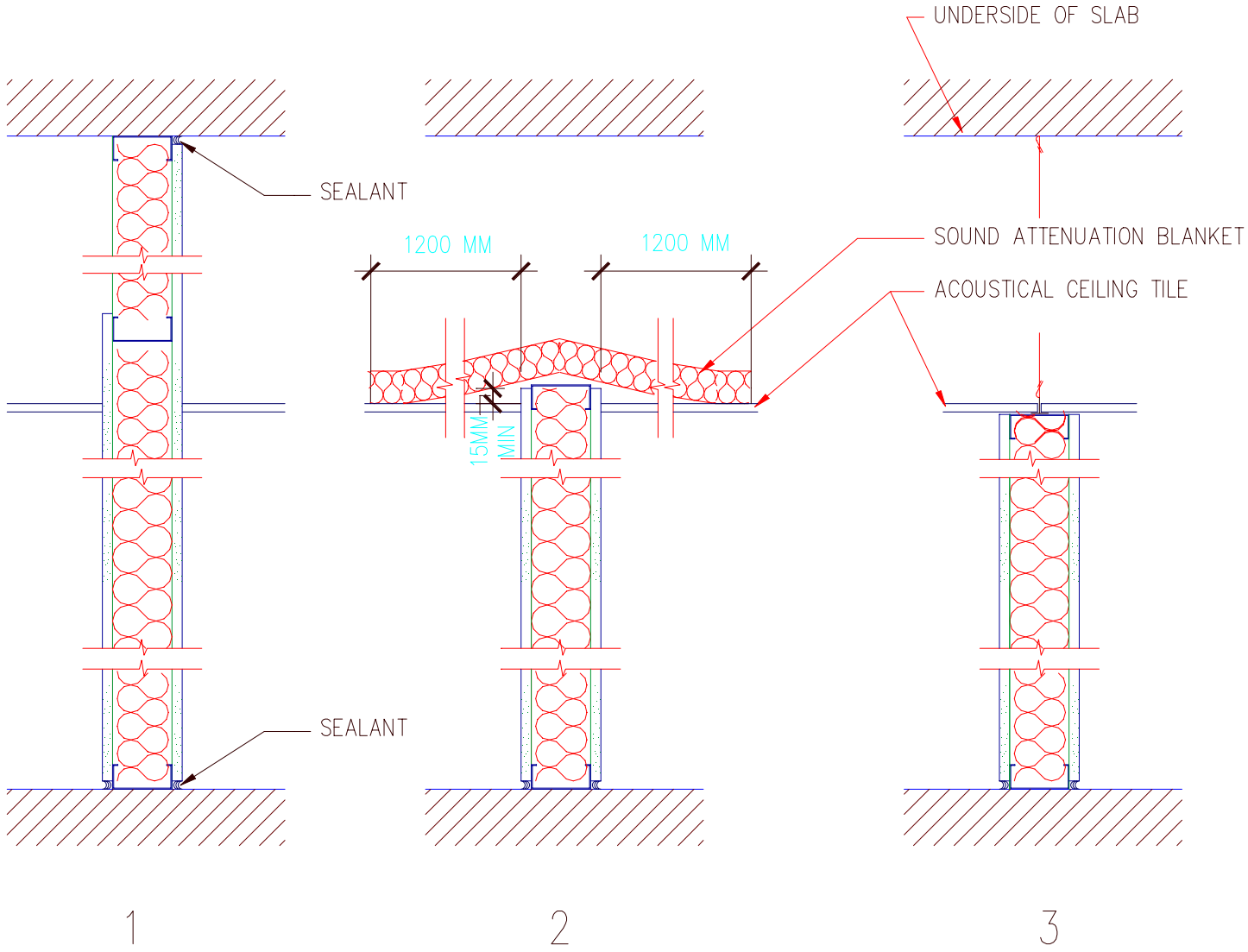

CEILING / PARTITION SOUND BARRIERS

Figure 23.3

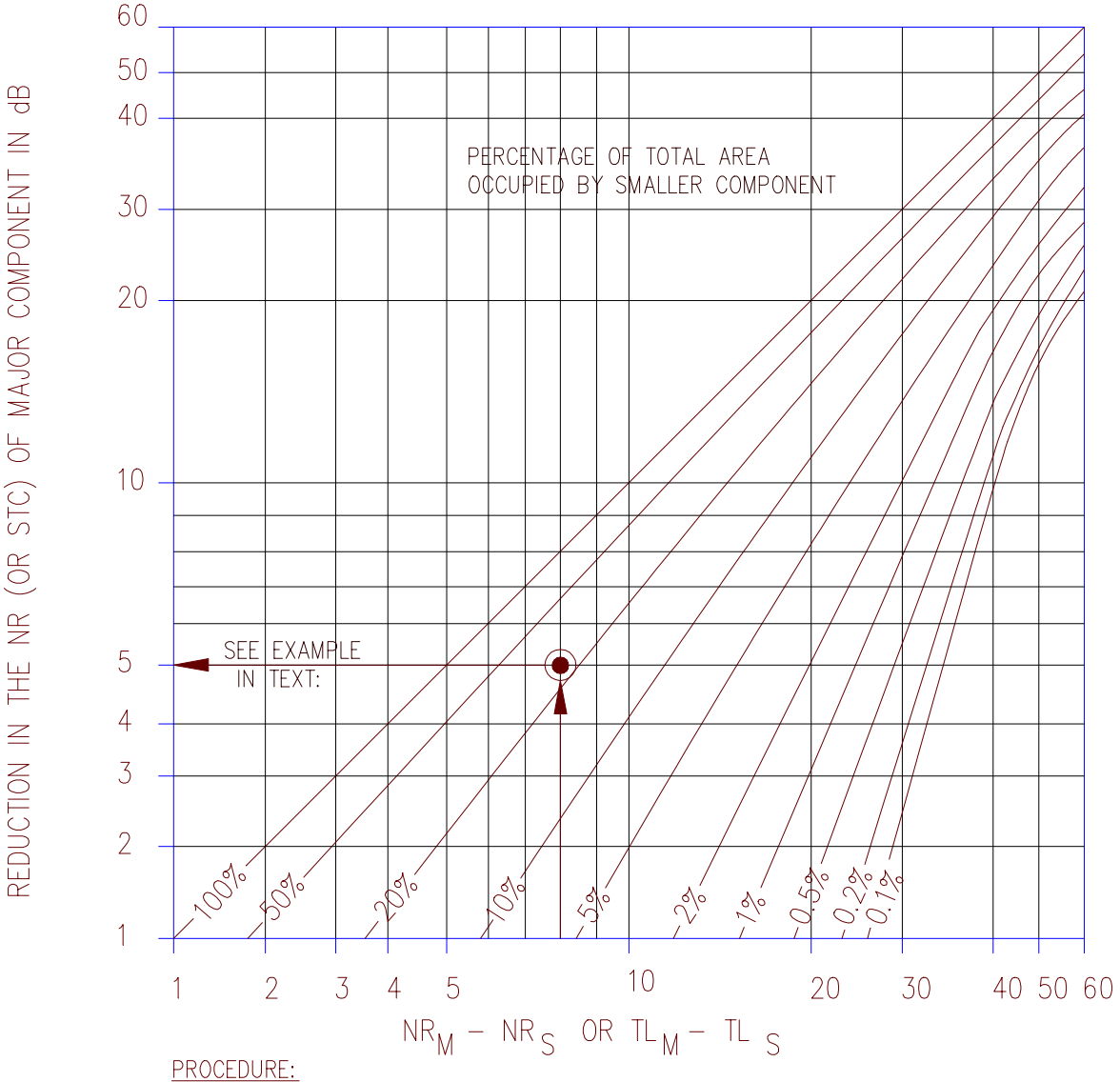

PROCEDURE:

1. DETERMINE AREAS OF TOTAL CONSTRUCTION AND SMALLER COMPONENT AND PERCENTAGE OF TOTAL AREA OCCUPIED BY SMALLER COMPONENT.
2. SUBTRACT NR (OR STC) OF SMALLER COMPONENT FROM NR (OR STC) OF MAJOR COMPONENT [$NR_M - NR_S$ OR $STC_M - STC_S$]
3. AT INTERSECTION POINT OF THESE TWO VALUES [FROM STEPS 1 & 2] FIND REDUCTION IN THE NR (OR STC) ON LEFT MARGIN.
4. SUBTRACT THIS VALUE FROM THE NR (OR TL) OF THE MAJOR COMPONENT TO DETERMINE TOTAL NR (OR STC) OF COMPOSITE CONSTRUCTION.

NOISE REDUCTION OF COMPOSITE CONSTRUCTION TYPES
Figure 23.4

23.3 ROOM ACOUSTICS.

23.3.1 General. The character and quality of acoustics within is a space is a function of the finish materials in the room (whether they are sound absorbing or sound reflecting) and the volume and shape of the room. Adequate areas of sound absorbing materials can reduce noise within the space, make the room more comfortable because reflections are not coming from all directions, and greatly improve speech intelligibility.

23.3.3 Design Guidelines.

23.3.3.1 Ceilings. Most general purpose spaces in military health care facilities can be made comfortable for noise control and room acoustics by judicious application of suspended standard acoustic tile ceilings. In potentially loud spaces, such as a cafeteria or industrial work area, the absorbing material should be chosen to have a particularly high NRC value, perhaps .75 or greater. In spaces with high ceilings, the additional volume increases reverberation in the space, and so such rooms should have additional sound absorbing wall treatments.

23.3.3.2 Other spaces. Special environments for presentations, conferences, lectures or loud labs may require specialized room shaping analysis and special sound absorbing approaches, including additional absorbing materials on walls.

23.4 MECHANICAL AND ELECTRICAL SYSTEMS NOISE AND VIBRATION CONTROL.

23.4.1 General.

23.4.1.1 Introduction. Mechanical systems create the most pervasive noise sources in buildings. Figure 23.5 shows the range of noise levels produced by typical building equipment. The noise problem is exacerbated in modern buildings because the buildings are often lightweight structures which easily transmit sound and vibration. Care should be taken in the location, selection, and installation of mechanical equipment and in the design of the enclosing constructions. When economically practicable, major mechanical equipment such as water chillers, boilers, pumps and compressors should be located in central plants totally separated from the health facility building. Mechanical equipment that remains within the building, such as air handling units, should be located in spaces that are segregated from acoustically sensitive areas, both vertically and horizontally, by the layout of non-critical buffer spaces (such as corridors) to avoid the need for special sound isolating constructions between equipment rooms and acoustically sensitive spaces.

23.4.1.2 Mechanical Systems Design. Careful consideration must be made to the selection, location, and installation of mechanical system components to insure compatibility with the building occupants and functional requirements. The misapplication of mechanical system components and their relationship to adjacent spaces can result in unwanted noise which is often annoying and could impede the facility function. The sections that follow address specific parts of the design approach for mechanical system noise and vibration control. These parts are: duct-borne fan noise; air-generated noise; cross-talk between spaces; noise control within mechanical equipment rooms; vibration isolation; and plumbing noise. These sections present general guidelines, and do not replace detailed engineering analysis. Refer to additional requirements for mechanical system noise control in Section 8 of this document.

23.4.2 Duct-borne Fan Noise.

23.4.2.1 Introduction. All rotating equipment, and most predominantly fans in air distribution systems, generate noise because of their energy consumption and inherent design. This noise is transmitted to occupied spaces through the air distribution system, both supply and return. The selection of quieter, initially more expensive equipment is generally more economical in the long run than the selection of a less expensive type of fan that requires considerably more noise and vibration control, detailing, materials, isolators, and constructions for sound separation. When practicable, equipment should be specified and selected on the basis of low noise level output; designers should schedule the maximum sound power output, per each octave band, for air handling unit fans.

23.4.3 Air-Generated Noise.

23.4.3.1 Introduction. The movement of air for heating and ventilating systems generates noise related to turbulent airflow. Turbulent airflow is created by uneven flow distribution, higher air velocities, obstruction in the air flow, and the like. Acoustically, low or medium air velocity systems are most appropriate for use in medical facilities because low velocity distribution generally requires less energy to move the air and also because low velocity air movement greatly reduces the generation and regeneration of noise produced by high velocities.

23.4.3.2 Airflow velocities. Listed below are the approximate ranges of airflow velocities at the face of the terminal devices (diffusers and grilles) and in the last 1 to 2 meters (3 to 6 feet) of duct serving a space, required to achieve specific ambient noise levels. These noise levels are represented by NC (Noise Criteria) curves (ref. Figures 23.6) and assume no additional noise contribution due to duct-borne fan noise or air turbulence.

Noise Criterion (NC) Range	Terminal Airflow Velocity	
	meters per second	(feet per minute)
NC-25 to NC-30	1.8 to 2.2	(350 to 425)
NC-30 to NC-35	2.2 to 2.5	(425 to 500)
NC-35 to NC-40	2.5 to 3.0	(500 to 600)

23.4.4 Cross-Talk Between Spaces.

23.4.4.1 Introduction. Cross-talk is the transfer of sound, such as intelligible speech, from one room to its neighbor by way of a common unlined supply duct or by way of a common return air path (either a duct or plenum return). These air paths are efficient paths for the transmission of sound, and can negate the privacy provided by the intervening construction elements. Examination rooms and patient bedrooms will require special consideration to prevent such cross-talk.

23.4.4.2 Duct layout. Locate the outlets of connected ducts as far apart as possible. Use diametrically opposing duct elbows to reduce cross-talk. Internal acoustic lining should *be avoided (is prohibited in inpatient areas), in favor of utilizing the natural attenuating effect of longer separating duct runs, elbows, and other duct fittings.* To minimize cross-talk transmission in *supply and return* ductwork, individual room runouts should be configured as shown in Figure 23.7, where the outlets are spaced as far apart as possible. *When room return air is not ducted (plenum return), designers must consider and provide construction details for an appropriate duct/fitting attachment to achieve required attenuation*.

23.4.5 Noise Control Within Mechanical Equipment Rooms.

23.4.5.1 Introduction. Mechanical equipment rooms are noisy environments. In conditions where exposure duration in excess of 85 dBA occurs for more than 8 hours (or higher noise levels are exceed for shorter periods of time), noise mitigation procedures may be required to meet federal noise exposure guidelines (e.g., OSHA regulations) and to reduce the possibility of hearing damage; permissible exposure limitations for lower noise levels are indicated below. When designing equipment rooms which will be regularly occupied by maintenance personnel (as opposed to rooms requiring only periodic maintenance visits), designers shall consider attenuation features necessary to control noise level.

Exposure Duration per day, day in hours	sound level in dBA
8	85
6	87
4	90
3	92
2	95
1½	97
1	100
½	105
¼ and less	100 (max)

23.4.6 Vibration Isolation.

23.4.6.1 Introduction. Structure-borne sound is produced by a noise source, such as vibrating or rotating machinery, which transmits energy directly into to and through the structure. This noise is often transmitted to far-removed locations in a building and is re-radiated by wall and floor construction as airborne noise. All vibrating equipment in a medical facility should be resiliently isolated on vibration isolation systems to reduce the transmission of structure-borne noise, according to manufacturers' recommendations and guide specifications.

23.4.6.2 Equipment location. The effectiveness of vibration isolators depends upon the degree of flexibility of the supporting structural system, and it always preferable to provide resilient support from a stiff and rigid base. Because of its high degree of stiffness, the grade slab of any building is the preferred location for major generating and prime moving equipment. All mechanical equipment installed above grade should be located as close as possible over a column, load-bearing wall, or other stiff structural member.

23.4.6.3 Static deflection. The effectiveness of any vibration isolation system is determined by its static deflection (that is, deflection under load). The design of the proper static deflection is determined by the speed and horsepower of the equipment being isolated, as well as by the location of the equipment within the building and the stiffness of the supporting structure. The determination of the static deflections for specific pieces of mechanical equipment will be made using the tables in section V of TM 5-0805-4, or as recommended by the equipment manufacturer to meet specified vibration transmission limitations.

23.4.6.4 Flanking transmission. Flanking transmission of vibration energy from mechanical equipment should be minimized. All connections to vibrating equipment should be through flexible connectors, conduits, piping, or hose. All piping in mechanical equipment spaces connected to vibrating equipment should be supported by resilient ceiling hangers or floor-mounted resilient supports. Penetrations through equipment room walls and ceilings should be

oversized, packed with a resilient material such as glass fiber or mineral fiber, caulked airtight, and covered with escutcheon plates where required for fire ratings. Piping should be supported on both sides of the penetrations and should not rest on the structure.

23.4.7 Plumbing Noise.

23.4.7.1 Introduction. One of the most common acoustical problems found in buildings is the noise generated by the water piping systems. Due to its easily identifiable nature, plumbing noise is one of the most disturbing and offensive types of noises encountered in building even though the noise levels are seldom excessively high. Most of the noise from piping systems is structure-borne, being transmitted along the piping throughout the building where the noise is re-radiated as airborne noise.

23.4.7.2 Piping isolation. At wall and floor penetrations, water piping runs should be free from the structure and the opening packed with a resilient insulation material and fully caulked. Water supply pipes larger than 50mm (2 inches) in diameter should be suspended from the structure on neoprene-in-shear hangers or floor-mounted on resilient supports. Flexible pipe connectors will be used to connect the supply and drain pipes to vibrating units such as garbage disposals, pot, pan and dishwashers.

23.4.7.3 Water pressure and flow velocities. High pressure and high velocity flow plumbing systems are inherently noisy due to turbulence in the fluid flow. To prevent the generation of excessive flow noise caused by turbulent water flow in the plumbing and piping systems located adjacent to sensitive areas, water pressure should be in the range of 2.8 kg to 3.5 kg per square centimeter (40 to 50 lbs./square inches).

23.4.7.4 Water hammer. The use of short, air filled branch pipes or stubs to control water hammer is not effective and should not be used, since the entrapped air in the stubs soon leaves these chambers by dissolving into the water. The most efficient means of preventing water hammer is to install one of the mechanical devices manufactured for this purpose, which employs a gas-filled stainless steel bellows to absorb the shock of the hydraulic waves by mechanical compression of the bellows. These devices are available in a variety of sizes to accommodate most fixture sizes used in buildings.

23.4.8 Isolation of Materials Handling and Transportation Systems.

23.4.8.1 Vertical services. Chutes, pneumatic tubes, and vertical conveyors should not be located adjacent to any acoustically sensitive space, and should be resiliently isolated from the building structure at each floor penetration by means of rubber-in-shear or glass fiber isolators providing a minimum static deflection of 12.5mm (0.5 inch). The exterior of each trash chute and large pneumatic tube should be coated with a visco-elastic vibration damping compound or other damping material.

23.4.8.2 Other services. Wherever possible, other vertical and horizontal systems runs, such as pneumatic tubes, conveyors, and monorails should not be located adjacent to, over, or under any acoustically sensitive space. These systems should be isolated from the building structure by resilient hangers, isolated support traps, or resilient pads or trapeze hangers, and should have no direct physical connection with the finish ceiling system of the space below. If the horizontal runs are routed over acoustically sensitive spaces, pneumatic tubes should be coated with visco-elastic damping compound or other damping material, such as 25mm (1 inch) thick glass fiber blanket, with an impervious outer covering, such as metal foil. Alternatively, these system runs can be boxed in, encased, or wrapped with an impervious barrier material such as dense plaster, gypsum board, or a 50mm (2 inch) thick glass fiber material, 6 pounds per cubic foot density, covered with an impervious outer

wrapping such as reinforced leaded vinyl or sheet lead.

23.4.8.3 Drive systems. In addition to resiliently isolating the service runs from the building structure, the drive units, transfer or diverter units, and exhauster, associated with each type of system run should also be isolated, as will the motors, pumps, compressors, gear and drive assemblies.

23.4.9 Emergency power systems. Emergency generators are typically located near the major power plant loads, somewhat physically isolated from acoustically sensitive areas, but such location must also be suitably close to patient care emergency loads to insure adequate service. Generator noise and vibration solutions must be considered during design. Generator exhaust location and configuration must consider visible emissions, noise levels and directionality of produced noise effects on patients, staff and neighboring facilities. Typical specifications for sound limitation should meet residential area requirements.

23.4.10 Other electrical systems. Interior dry distribution transformers and fluorescent lighting fixtures should be specified to limit intrinsic acoustic "hum" noise to non-noticeable levels in functional areas.

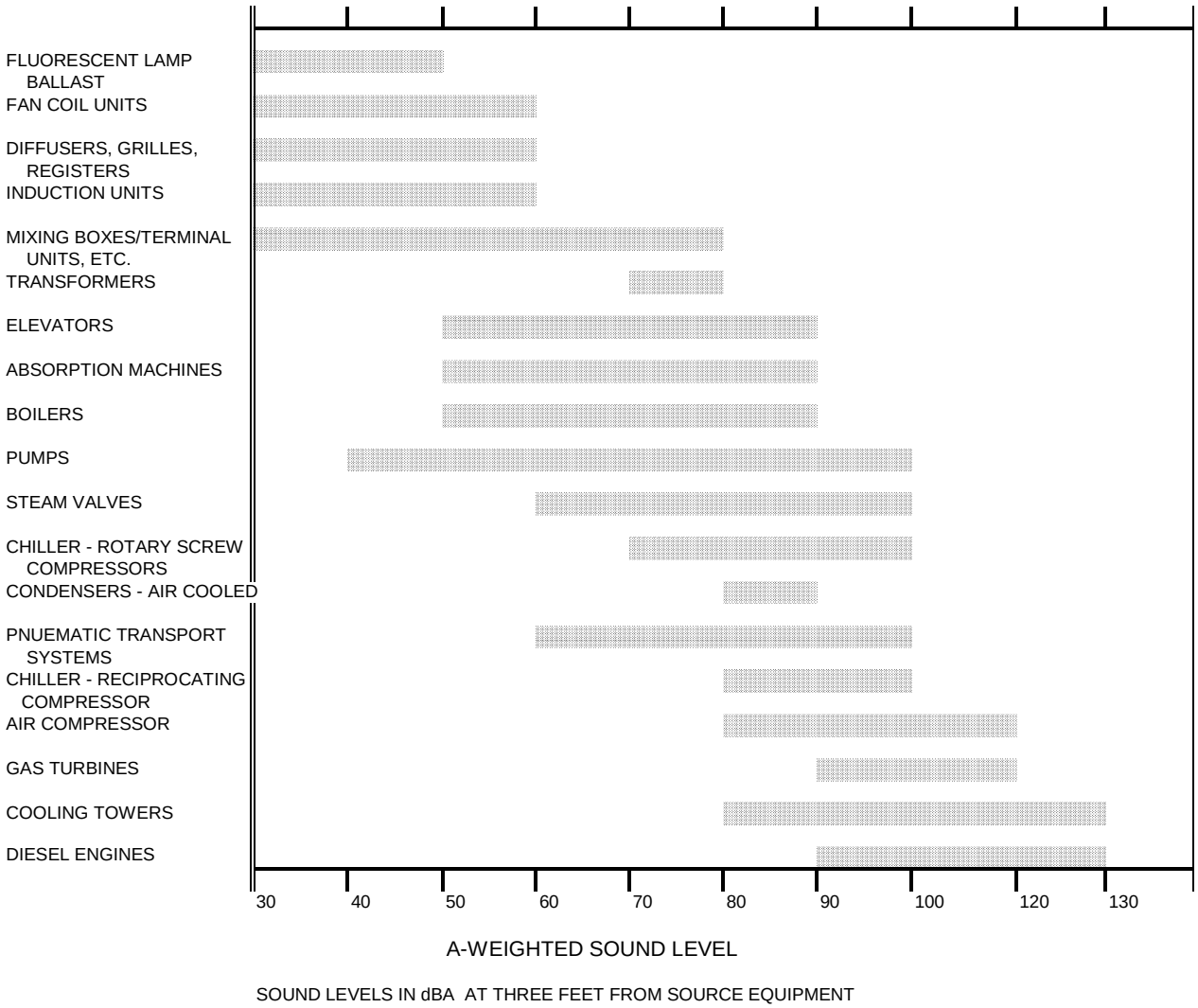

SOUND LEVELS FROM BUILDING EQUIPMENT

Figure 23.5

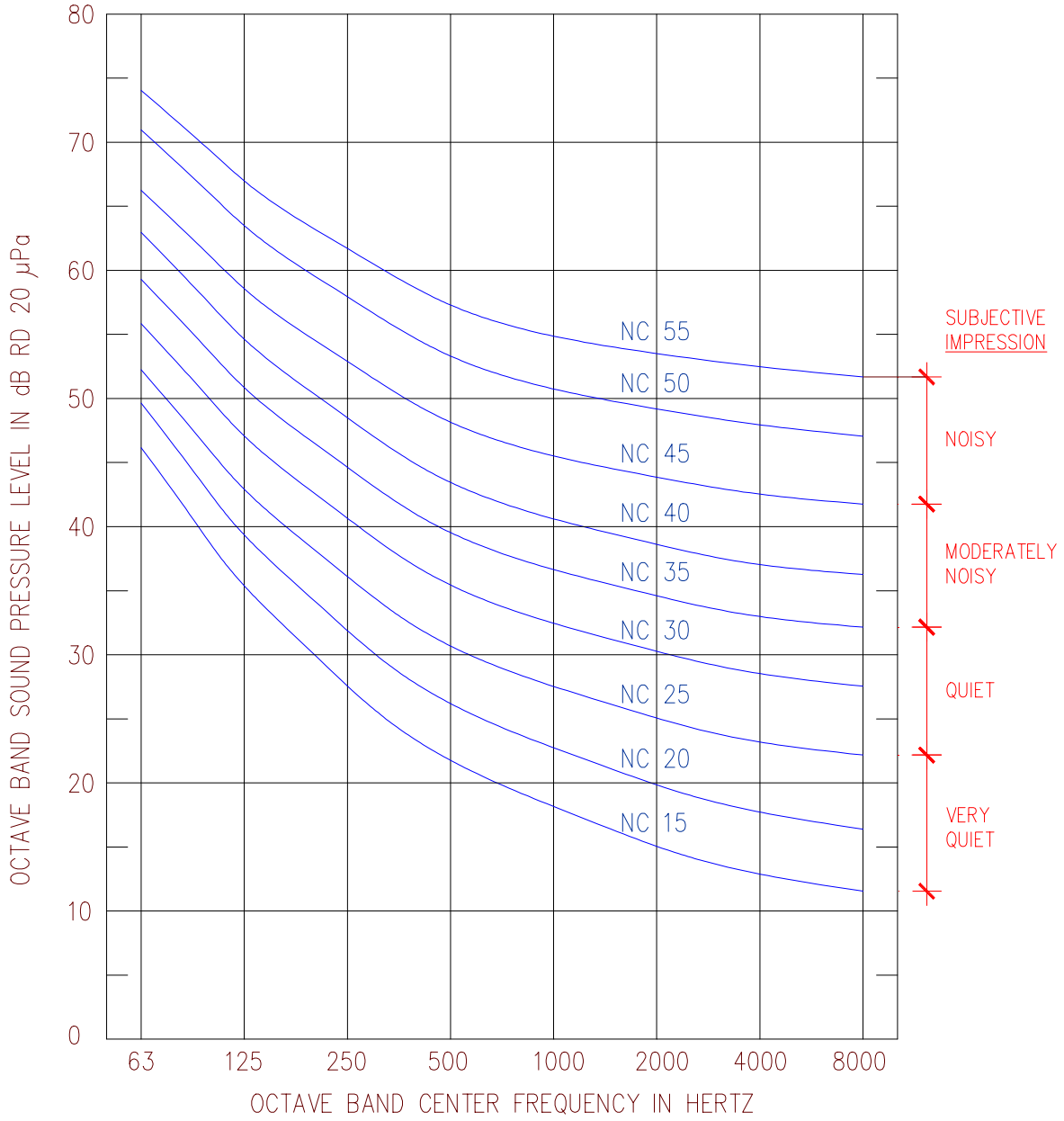

NOISE CRITERIA (NC) CURVES

Figure 23.6

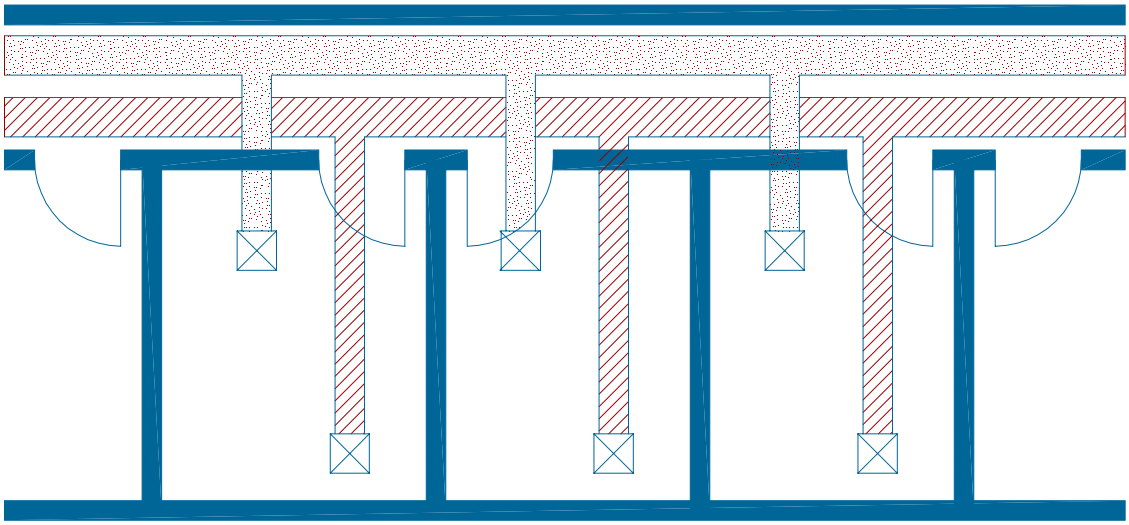

LAYOUT A RECOMMENDED LAYOUT OF DUCT RUNS TO MINIMIZE CROSSTALK BETWEEN SPACES

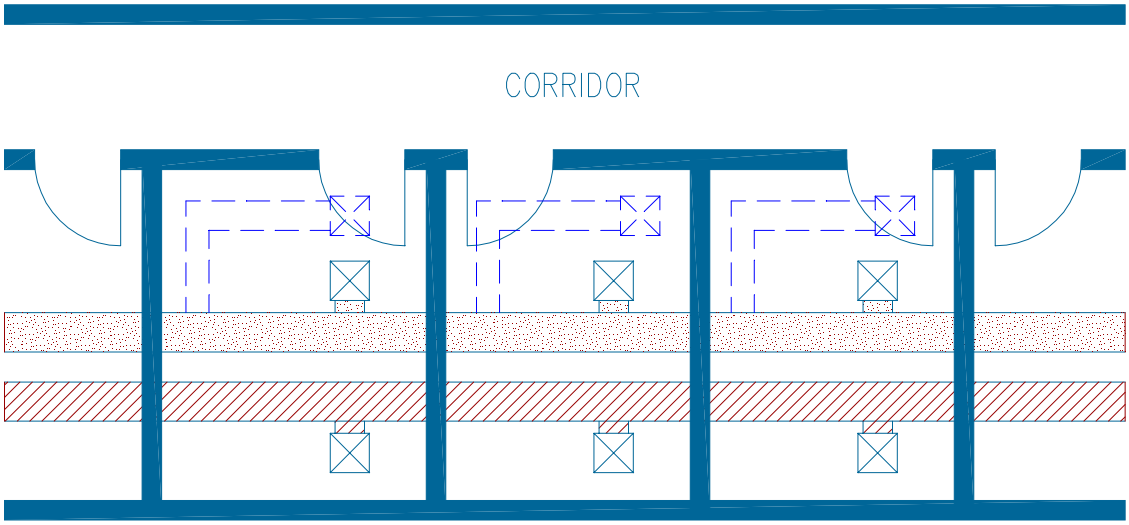

LAYOUT B NOT RECOMMENDED

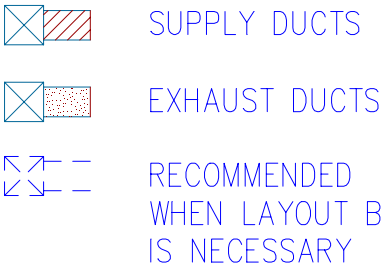

SCHEMATIC DUCT LAYOUTS

Figure 23.7

APPENDIX E: ACOUSTICS

E.1. Introduction. This appendix covers general acoustics information, designed to help a design professional or facility program manager in understanding in more detail, individual aspects not covered in section 23 and Appendix A.

E.2 Definitions.

E.2.1. A-weighted decibels (dBA): The A-weighted scale of a sound level meter measures decibels in a manner that discriminates against lower frequencies in the same manner as does human hearing. Therefore, sound measured in dBA is a fair measure of how loud we perceive a source.

E.2.2. CAC (Ceiling Attenuation Class): CAC values measure the amount of sound that is blocked by an acoustic tile ceiling for the sound path that goes from one room, through its acoustic tile ceiling, into a standard plenum, and back through the acoustic tile ceiling into a neighboring room. The CAC value applies just to this path through the plenum, and is analogous to the STC rating for a wall. Higher values indicate a greater ability to block sound.

E.2.3 Coefficient of absorption. All materials absorb some sound, and this percentage of sound is measured (in laboratory tests) as a coefficient of absorption. Coefficients of absorption range in value from close to 0 (no absorption) to nearly 1.0 (100 % efficient); these coefficients vary as a function of frequency. Materials that are most efficient at absorbing sound include soft porous “fuzzy” materials such as glass fiber, mineral wool, carpet, curtains, acoustic tile, and other specialty materials. Materials that depend on their porosity to absorb sound should not be painted in a way which will clog their pores, and thus degrade their acoustical performance.

E.2.4. Decibels (dB). Sound energy is measured in decibels (dB), which corresponds to loudness. The decibel scale ranges from 0 dB (threshold of hearing) to over 100 dB (painful and injurious to one’s health). Decibels are a logarithmic scale, which means that you can not add decibels directly (50 dB + 50 dB equals 53 dB, and does not equal 100 dB). Discussions that follow will avoid detailed calculations or technical analysis.

E.2.5. Frequency (Hz). The frequency of vibrations for a sound source is measured in cycles per second, or Hertz (Hz), which corresponds to pitch. Human hearing responds to sound from 20 Hz (very low tones) to 20,000 Hz (very high tones). Frequencies of sound relate to types of noise sources (e.g., diesel engines produce low frequency sound, human speech carries intelligibility at higher frequencies), sound paths (some materials and constructions are better at blocking or absorbing sound at certain frequencies than at other frequencies), and the receivers (humans are most sensitive to sounds at mid- to high-frequencies of 500 Hz and above).

E.2.6. IIC (Impact Isolation Class): IIC is a single number rating system for the ability of a floor/ceiling construction system to reduce the noise of impact or structure-borne energy. Higher values indicate a greater ability to reduce impact noise.

E.2.7. NC (Noise Criteria level): NC is a single number rating system for level and spectrum of steady-state background noise levels in buildings, as determined by the noise of mechanical systems. Minimum and maximum ratings per room are listed in Appendix “A”.

E.2.8. NIC (Noise Isolation Class): NIC is the single number rating based on field tests of how well all inter-connected constructions around a room block sound. NIC will often be less than the STC rating for the same construction by about 4 to 8 decibels. The NIC ratings include the contribution of all sound paths between adjacent spaces (including doors, ceilings, windows, etc.). Higher values indicate a greater ability to block sound.

E.2.9. NR (Noise Reduction): NR is another measure of all the sound transfer between two spaces, by way of multiple paths (such as walls, floors, doors, ceilings, windows, etc.) The NR is the difference in A-weighted sound levels (dBA) from source to receiver. Higher values indicate a greater ability to block sound.

E.2.10. NRC (Noise Reduction Coefficient): NRC is a measure of the sound absorption of a material within a space. It is the average of absorption coefficients of the mid-frequencies that are most typical of general office and speech use. NRC values range from 0 to 1, with the value being rounded to the nearest .05 value. Higher values indicate a greater ability to absorb sound.

E.2.11. Source/Path/Receiver. Every acoustics problem and issue can be analyzed by looking at the separate elements that comprise the source/path/receiver outline. The source may be a neighbor talking, mechanical equipment, a vibrating pump, music from a stereo, or outside traffic. The path may be the building envelope, the intervening construction between two spaces and the multiple paths by which sound may travel, the air in a room, the building structure (in the case of structure-borne transmission), or several of these elements together. The receiver is the human occupant (patient, office worker, neighbor) whose health and welfare are the goal of the acoustical design.

E.2.12. STC (Sound Transmission Class): STC is the single number rating based on laboratory tests of how well a particular construction type blocks sound. STC values are determined from TL data (see below). Higher values indicate a greater ability to block sound.

E.2.13. TL (Transmission Loss): The ability of materials to block sound is measured in a laboratory as the Transmission Loss, TL. TL covers a wide range of discrete octave band or one-third octave band frequencies. A higher TL means that less sound is transmitted through the construction, and hence provides better sound isolation. TL is mainly useful in order to derive the single number STC value for a material (see above).

APPENDIX A
ARCHITECTURAL AND ENGINEERING DESIGN REQUIREMENT

LEGEND and NOTES

SYNOPSIS

Appendix A is a compilation of detailed architectural and engineering design criteria organized by standard Room Codes. The Room Codes used to organize the Appendix A are the same as the codes used to organize the Program for Design and the Equipment List, so the initial design requirements should be well established for the designer.

TABLE OF CONTENTS

ITEM	PAGES
Synopsis and Table of Contents	A-1
Legend and Notes	A-2 thru A-13
Database	A-14 thru A-109

APPENDIX A
ARCHITECTURAL AND ENGINEERING DESIGN REQUIREMENT

LEGEND and NOTES

1. Room Code (5 characters). Room identifier from DoD space planning criteria. This code is the reference key that ties the Appendix A criteria to the DoD Program for Design.

2. Room Name (37 characters). From the DoD space planning system.

3. Architectural (27 characters).

a. Matrls and Fin. Materials and Finishes (13 characters).

FL Floor and base finishes (2 characters). See Architectural Note 1.

- AR Acrylic resin system with integral coved base. See Architectural Note 12.
- CP Carpet with resilient base, see Architectural Note 2.
- CS Concrete sealer. Resilient base on gypsum. wallboard and plaster walls. No base on concrete or block walls.
- CT Ceramic tile with ceramic tile base.
- ER Epoxy resin system with integral coved base. See Architectural Note 12.
- ET Epoxy terrazzo with epoxy terrazzo base.
- PF Prefabricated.
- QT Quarry tile with quarry tile base.
- SP Special. Determined by designer.
- SV Sheet vinyl with integral vinyl base. See Architectural Note 3.
- VT Vinyl composition tile with resilient base. See Architectural Note 2.

WAL Wall Material & Finish (3 characters). First character is wall material. Second and third characters are finish. See Architectural Note 1.

Wall Material (first character)

- C Concrete
- B Concrete block or clay tile
- G Gypsum wallboard. See Architectural Note 4.
- P Plaster
- S Special. Determined by designer.

APPENDIX A
ARCHITECTURAL AND ENGINEERING DESIGN REQUIREMENT

LEGEND and NOTES

Wall finish material (second and third characters)

AF	Acoustical wall fabric
CS	Concrete sealer
CT	Ceramic tile
LG	Liquid Glaze Coat. See Architectural Note 5.
PF	Prefabricated
PT	Paint.
EL	Epoxy coating, seamless, lead lined. See Architectural Note 10.
EP	Epoxy coating, seamless. See Architectural Note 10.
SP	Special. Determined by designer.
VF	Vinyl wall fabric. See Architectural Note 6.
VP	Veneer plaster. See Architectural Note 7.

CLG Ceiling Material and Finish (3 characters).
See Architectural Note 1.
First character is ceiling material.
Second and third characters are finish.

Ceiling material (first character).

A	Acoustic ceiling tile
C	Concrete
G	Gypsum wallboard
P	Plaster
S	Special. Determined by designer.

Ceiling Finish Material (Second and third characters)

CS	Concrete sealer
LG	Liquid Glaze Coat
PF	Prefabricated
PT	Paint
SP	Special. Determined by designer.
EP	Epoxy coating, seamless, with coved corners. See Architectural Note 11.
T1	Standard finish.
T2	Waterproof finish.

LEGEND and NOTES

b. CLG HT. Maximum ceiling height in millimeters (4 characters).

2400mm = 7'- 10.5" corresponds to 8'-0"
2600mm = 8'- 6.4" corresponds to 8'-6"
2700mm = 8'- 10.3" corresponds to 9'-0'
2900mm = 9'- 6.2" corresponds to 9'-6"
3000mm = 9'- 10.1" corresponds to 10'-0"
A = If this area is combined with a delivery room, provide 3000mm (10'-0") ceiling height, minimum. If not combined, provide 2400mm (8'-0") CLG HT.
B = 3000mm (10'-0") minimum.
VAR = Varies (designers choice)

c. D00R SIZE. First line is minimum door width in millimeters (4 characters). Second line is door width in feet and inches.

450mm corresponds to 1'-6"
900mm corresponds to 3'-0"
1050mm corresponds to 3'-6"
1200mm corresponds to 4'-0"
A = Pair 750mm (2'-6") doors.
B = Pair 900mm doors.
C = Pair 1050mm doors.
D = Double door, 1200mm and 450mm
E = Pair 900mm doors or 1200mm doors as directed by using service.
F = 900mm between scrub room and nursery. 1200mm between delivery room and nursery.
G = In clinics, provide 1050mm. In hospitals, provide double door, 1050mm and 450mm.
H = 2400mm (8'-0"), pair 1200mm doors, by 2600mm(8'6") breakaway glass doors or double door 1200mm and 450mm as directed by using service.
I = 3000mm (10'-0") by 3000mm (10'-0") minimum. Number as required by dock.
J = Main OR door, pair 900mm doors. Staff door from clean corridor, 1200mm. Door to sub-sterile, 1050mm.
K = Main OR door, pair 900mm doors or 1200mm and 450mm or 1050 mm and 450 mm as directed by using service. Staff door from clean corridor, 1200mm. Door to sub-sterile, 1050mm.
L = Darkroom door. Provide revolving door or light tight door, or vestibule entry, as appropriate.
M = Open (no door) or 900mm door as directed by using service.
N = Open (no door) or 1200mm door as directed by using service.
SP = Special, designers choice.
VAR = Varies, designers choice.
VET = Special door in veterinary facility. See Architectural Note 13.
OPEN = No door required.

LEGEND and NOTES

d. NOISE. ACOUSTIC NOISE LEVEL. (5 characters).

IN RM. Noise level in room (2 characters). First line is minimum, second line is maximum. See Architectural Note 8.

SC. Sound transmission Class (2 characters). see Architectural Note 9.

e. ARCHITECTURAL NOTES.

1. When two finishes are appropriate for a room, the preferred finish is shown in Appendix A first. The using Military Department may select the alternate finish.

2. Resilient Base. Rubber or vinyl coved base for use with resilient tile. Coved base shall terminate and butt at the face return of steel door jambs. A straight vinyl or rubber base or carpet base shall be used with carpet flooring. Fire-retardant wood blocking or metal runners shall be provided at the steel stud base channel runner for all gypsum board corridor walls.

3. Sheet Vinyl. Solid, seamless vinyl in either roll or tile format with routed, welded, grooved seams where melted vinyl is used for an impervious, waterproof seal. Chemical sealants are unacceptable. Cushioned sheet vinyl may not be used. Provide seamless sheet vinyl base integral with the flooring, using the same joint sealing application technique of grooved, melted, welded, vinyl for an impervious waterproof seal.

4. Gypsum wallboard. Minimum 5/8 inch ("green board" for damp or wet areas).

5. Liquid Glaze Coat. This coating is a seamless, sprayed-on, lusterless semi-gloss two-component polyester epoxy or polyurethane finish. Veneer plaster may be substituted for liquid glaze coat where impact resistance, cleanability, and moisture resistance is a factor.

6. Use type II vinyl wall fabric in all areas except corridors and cart traffic areas where type III vinyl wall fabric shall be used. Type III shall also be used in waiting rooms alcoved off major circulation corridors.

7. Veneer Plaster. May be used as an alternate to "green board" in damp or wet areas as a substitute for GVF, GLG, GCT; and, in corridors, litter holding, litter/wheelchair waiting/alcoves, Utility Rooms, Treatment Rooms, toilets without showers, Physical Therapy, Operating and Delivery Rooms, Nurse Stations, Laboratories and related spaces), Central Sterile Supply, patient bedrooms, and anywhere else water-resistance, cart abuse, cleanability, and impact resistance is required. Veneer Plaster Wallboard (GVP) is a suitable substitute for plaster.

LEGEND and NOTES

8. The acoustical noise level in the room is the design value for the NC-Level for the background (ambient) noise level.

9. The STC specifies the performance of the room enclosure in isolating against airborne sound. Where no door is specified, the remainder of wall partition/ceiling system should still be designed to this value. This design value is generally considered as a minimum rating.

10. Seamless epoxy coating shall be used on all walls throughout the veterinary facility. Concrete block substrate shall be vermin-proof construction with flush joints.

11. Seamless epoxy coating shall be used on ceilings in the veterinary facility. Gypsum wallboard substrate shall consist of two layers of fiber reinforced wallboard. Ceiling shall have coved corners.

12. Provide non-slip finishes in corridors and all areas where pedestrian traffic is anticipated. Provide smooth finish where greater degree of cleanability is required (under cage racks for example).

13. Provide vermin proof hollow metal doors, 48 inch by 96 inch, with 12 inch by 12 inch red glass vision panel and recessed hardware. Provide door seals. Do not provide door lock.

4. STRU FLR LOAD. Floor Load in kilo-Pascal (4 characters).

kPa corresponds to pounds/SF (PSF)

3	60
4	80
5	100
6	125
7.5	150
10	200
12	250
13	275
17	350

A = Design for actual wheel loads or 7.5 kPa (150 psf) minimum.

B = Design for actual equipment loads or 7.5 kPa (150 psf) minimum.

C = Design for actual equipment loads or 5 kPa (100 psf) minimum.

D = Design for actual weight of shelves plus 55 kg/filing meter (3.1 lbs/filing in.) or 7.2 kPa (150 psf) minimum on the floor.

LEGEND and NOTES

5. ELECTRICAL. (20 characters).

a. LIGHT.

LEV Maximum general lighting level in lux (4 characters). First line is general lighting level, second line is task lighting.

LUX	corresponds to Footcandles
100	10
150	15
200	20
300	30
500	50
700	70
1100	100
1600	150
2100	200

N Lighting Notes (1 character). Second line is second note.

A. Provide full-range dimming in room or special task area.

B. Provide recessed ceiling exam fixture with high color rendering type (80 minimum CRI) lamps and 1100 lux task illumination on bed or recovery area (see section 10)

C. Provide high color rendering index type (80 minimum CRI) lamps.

D. Provide O.R. Type Light Fixture or exam Light with dimmer at task location.

E. Explosion Proof design typically required.

F. Provide multi-level switching with conventional on/off switching. Provide lighting control at individual task location where practical.

G. Provide Safelight for film processing as required by Equipment List.

H. Provide full-range dimming at task location.

I. Provide recessed ceiling mounted task illumination with full-range dimming.

LEGEND and NOTES

b. EM. PWR. Emergency power required in room (9 characters).

PWR Approximate percentage of general power outlets on emergency system or note as listed below (3 characters).

- R Selected receptacles.
- R1 One receptacle per bed.
- RA All receptacles.
- RC Dedicated receptacles for critical care (refer to NFPA-70, Article 517).

LT Approximate percentage of general lighting on emergency system or note as listed below (3 characters).

- L Task Lighting.
- LB Task Lighting, General Illumination, and battery powered lighting. (refer to section 10).
- LE Egress Lighting as required by NFPA 101.

N Emergency Power notes (1 character).

- E. Selected equipment connections.
- U. Provide emergency power only as required by using Military Department.
- S. Special.

LEGEND and NOTES

6. Medical Gases (23 characters). The number of outlets required for each gas type is listed in the appropriate column. "0" is entered in columns where no outlet is required to make the table easier to read.

MCA - Medical Compressed Air
DCA - Dental Compressed Air
LA - Laboratory Air
PA - Process Air
MV - Medical Vacuum
DHV - Dental High Vacuum
DLV - Dental Low vacuum
LDE - Laboratory Dust Evacuation
OX - Oxygen
NO - Nitrous Oxide
NI - Nitrogen

N - See Medical Gas Notes (1 character).

MEDICAL GAS NOTES.

A. Each patient is provided an oxygen. In psychiatry and light care units, pipe medical gases through the zone valve box to a point immediately above the corridor ceiling where the piping will be capped.

Each patient is provided a medical vacuum inlet, see individual listing.

Each patient is provided access to a medical air outlet. Where two patients share a common wall, they may share a single outlet, excluding psychiatric patients. Do not provide in pediatric play area.

B. The medical gases specified will be per patient station, workstation, etc.

C. Each overhead service column will contain 2 OX, 2 MV, 1 MCA, 1 NO. In addition, 1 OX, 1 MCA, 1 MV will be wall or overhead track mounted, as indicated, for infant resuscitation. Dedicated c-section rooms may have 2 columns.

D. All anesthetizing locations will have a waste anesthetic gas disposal system. Use of medical vacuum system is not recommended for evacuation in DoD facilities. DLV may be used in dental treatment rooms for anesthesia scavenging where a central system is installed.

APPENDIX A
ARCHITECTURAL AND ENGINEERING DESIGN REQUIREMENT

LEGEND and NOTES

E. One each OX, MCA, MV is required in both the headwall unit and the infant resuscitation area of the birthing room.

F. Each overhead service column will contain 2 OX, 2 MV, 2 MCA, 1 NO and 1 NI. An additional MV will be provided on each wall as appropriate.

G. The medical gases specified will be per bassinet or infant station.

H. The medical gases specified will be per 6-8 bassinets or infant stations. Where the LDR birthing room concept is used, a minimum of one grouping will be provided in each LDR.

I. For equipment testing and calibration, equipment shall be tested with the specific gas used in normal operation.

J. Provide valved regulator station for PA.

K. Each utility center requires 1 DCA and 1 DLV.

L. A natural gas outlet (counter mounted) and a lab air outlet (under counter-mounted) will be provided at each dental work station as shown in Appendix A.

M. All contingency beds require 1 OX, 1 MV, 1 MCA per bed station. In bed expansion situations in "peace time" facilities also provide 1 OX, 1 MV, 1 MCA per contingency bed expansion requirements noted in the program for design.

N. Facilities may use nitrogen for driving surgical handpiece in oral surgery DTRs.

LEGEND and NOTES

7. HVAC (23 characters).

a. BL. Air Balance (2 characters)

+- Room pressure to be positive or negative as required by isolation mode of assoicated bedroom. See HVAC Note “E” below. space as described below.
++ Room exhaust and/or return is 20% less than supply.
+ Room exhaust and/or return is 10% less than supply.
0 Room exhaust and/or return is equal to supply.
- Room exhaust and/or return is 10% more than supply.
-- Room exhaust and/or return is 20% more than supply.
EX Room totally exhausted without supply.

b. AC. Air Change (2 characters) is the minimum total air changes per hour required to meet ventilation requirements at design conditions. These rates are considered the minimum required for normal health and comfort consideration. Additional air may be required for temperature, dilution, and odor control, as well as air requirements for such items as hoods, glove boxes, clean-air stations, combustion equipment and dust collectors.

c. OA. Outside Air (2 characters) is the minimum outside air changes per hour required to meet ventilation requirements at design conditions.

* Asterisk indicates that ventilation is to be based on the greater of 4 outdoor air changes or 15 CFM outdoor air per person.

d. TEMP. Interior design temperature. First line is in degrees Celsius (C), second line is in degrees Fahrenheit (F), for heat gains calculations. When the only temperature listed is for the summer condition, this temperature will be used for year around operation. When cooling is required during winter, such as in interior zones, temperature listed under summer conditions should be used.

SM. Minimum design temperature (2 characters) for summer months.

WN. Maximum design temperature (2 characters) for the space during heating season.

LEGEND and NOTES

e. RH. Relative Humidity (1 characters). This is the relative humidity to be maintained in a space as part of the designed conditions.

Blank RH may vary from 30-60%.
Y RH must be controlled at 55%, + or - 5%.

f. FL. Filtration (5 characters) indicates the level and location of filtration required. See HVAC Note B.

IN Intermediate filtration in percent (2 characters).
FN Final filtration in percent (2 characters).

g. EX. Exhaust Outside (1 character). This column lists areas that require 100% exhaust directly to the outside.

Y Exhaust to outside required.
Blank Exhaust not required.

h. N. See HVAC Notes (3 characters)

HVAC Notes.

A. Nursery Isolation Room relative pressurization requirements may vary among individual facilities, depending upon functional requirements. Designers shall coordinate with the Using Service for each facility to determine whether disease isolation (negative pressurization) or protective isolation (positive pressurization) is required. While “switchability” (room convertible from disease isolation to protective isolation, or vice versa) is discouraged, facility function and program limitations may dictate that this feature be provided.

B. General Filtration. Prefilters, 25%, are required for all outdoor air. The values for the 25%, 80% and 90% filters are by the atmospheric dust spot efficiency test. The atmospheric dust spot efficiencies are the minimum average and are based on ASHRAE Standard 52-76. Designation “99” indicates that a 99.97 % efficiency HEPA filter is required, based on the DOP (Dy-Octyl Phthalate, or bis 2-ethylhexylphthalate) test method. The DOP test efficiency is based on MIL-STD 282. All filters should be installed to prevent leakage between the filter segments and between the filter and its supporting frame.

C. During period of non-use, the air volume may be reduced to 6 air changes per hour, while maintaining the required air balance. 90 percent intermediate filtration is indicated because the same AHU normally serves adjacent OR/DR support areas requiring this level of filtration. Where the AHU serves only OR/DR spaces, the 90% intermediate filter may be replaced with a 60%-80% filter, intended to prolong the life of the final filter.

D. When the Using Service intends the routine usage of nitrous oxide in

LEGEND and NOTES

the DTR, routine being defined as exceeding 5 hours per week, the following criteria shall apply:

- DTR room air changes shall be not less than 12 total AC/H.
- The room shall be totally exhausted.
- Provide a minimum of one low-level exhaust register, sized to remove a minimum of 20% of the total room exhaust volume.
- During period of non-use, air change rate may be reduced to 3 total AC/H.

LEGEND and NOTES

E. General, Isolation Rooms. For Disease Isolation Bedrooms, bedroom to be negative to anteroom, anteroom to be negative to corridor. For Protective Isolation Bedrooms, bedroom to be positive to anteroom, anteroom to be positive to corridor. Note that room description and engineering requirements for BRII1, BRIM1, BRIP1, and BRIS1 are for Disease Isolation; this does not preclude the provision of Protective Isolation bedrooms in pediatrics, ICU, or other ward locations when local conditions dictate need. Protective Isolation engineering requirements will be the same as for BRIT2.

F. Exhaust all to outside applicable to process only.

G. Design in accordance with NFPA 99.

H. May require vehicle exhaust, CO detection.

I. When the Using Service intends the routine usage of nitrous oxide in the DTR, routine being defined as exceeding 5 hours per week, the following criteria shall apply:

- DTR room air changes shall be not less than 12 total AC/H.
- The room shall be totally exhausted.
- Provide a minimum of one low-level exhaust register, sized to remove a minimum of 20% of the total room exhaust volume.
- During period of non-use, air change rate may be reduced to 5 total AC/H. Positive pressurization shall be maintained.

J. For projects incorporating brace/appliance fitting or shop applications, evaluate room and equipment exhaust requirements for removal of toxic or flammable fumes and dust.

K. Not Used

L. Not Used.

M. Provide exhaust or fume hoods,and localized exhaust as required.

N. Verify computer heat load requirement.

O. Provide adjustable (to user) humidistat within the room.

P. Provide adjustable (to user) thermostat and humidistat within the room.

Q. HEPA Filtration of room exhaust is not required if designed to discharge away from public areas (sidewalks, eg.) and such as to avoid reentrainment into any building opening or outside air intake. Exhaust of TB isolation room, toilet, and anteroom to be by dedicated exhaust system, ie., exhaust system serving only TB isolation room(s). Isolation room pressure to remain constant - not switchable from Disease Isolation mode to Protective Isolation mode, or vice versa.

R. HEPA Filtration of supply air required.

APPENDIX A
ARCHITECTURAL AND ENGINEERING DESIGN REQUIREMENT

LEGEND and NOTES

S. Not used.

APPENDIX A
ARCHITECTURAL AND ENGINEERING DESIGN REQUIREMENTS

ROOM CODE	ROOM NAME	ARCHITECTURAL MATRL+FIN FL	WAL	CLG	CLG HT	DOOR SIZE	NOISE RM	SC	STRU FLR LOAD
ADMR1	ADDRESSOGRAPH MACHINE ROOM	VT	GAF	AT1	2400	900	34	55	3
		CP	..	.	8-0	3-0	45		60
ADP01	AUTOMATIC DATA PROCESSING COMPUTER	VT	GAF	AT1	2400	900	35	50	C
		CP	..	.	8-0	3-0	40		C
ADPT1	AUTOMATED DATA PROCESSING TERMINAL	VT	GAF	AT1	2400	900	35	50	C
		CP	..	.	8-0	3-0	45		.
ADPV1	AUTOMATED DATA PROCESSING VAULT	VT	GAF	AT1	2400	1200	35	50	D
		CP	..	.	8-0	4-0	45		.
ADPXX	COMPUTER ROOM	VT	GPT	AT1	2400	900	35	40	5
		.	..	.	8-0	3-0	40		100
AMB01	AMBULANCE SHELTER	CS	SSP	SSP	VAR	SP	.	.	A
		.	..	.	VAR	SP	.		A
AMB02	AMBULANCE GARAGE	CS	BPT	SSP	VAR	SP	35	50	A
		.	..	.	VAR	SP	40		A
ANCW1	ANESTHESIA CLEAN WORKROOM	SV	GLG	AT2	2400	900	35	40	3
		.	..	.	8-0	3-0	40		60
ANSW1	ANESTHESIA SOILED WORKROOM	SV	GLG	AT2	2400	900	35	40	3
		.	..	.	8-0	3-0	40		60
APAM1	APPLIANCE ADJUST/MODIFY FULL	VT	GPT	AT1	2600	1200	35	40	C
		.	..	.	8-6	4-0	40		.
APAM2	APPLIANCE ADJUST/MODIFY SHOP SMALL	VT	GPT	AT1	2400	900	35	40	3
		.	..	.	8-0	3-0	40		60
APFB1	APPLIANCE FULL BRACE SHOP	VT	GAF	AT1	2600	1200	70	40	5
		.	..	.	8-6	4-0	80		100
APFR1	APPLIANCE FITTING ROOM	VT	GPT	AT1	2400	900	35	40	3
		.	..	.	8-0	3-0	40		60
APLA1	APPLIANCE LAMINATION AREA	VT	GPT	AT1	2400	900	35	40	C
		.	..	.	8-0	3-0	40		.
APMS1	APPLIANCE MACHINE SHOP	VT	GPT	AT1	1200	1200	35	40	D
		.	..	.	8-6	4-0	40		.
APSH1	APPLIANCE SHOE SHOP	VT	GPT	AT1	1200	1200	35	40	C
		.	..	.	8-6	4-0	40		.

APPENDIX A
ARCHITECTURAL AND ENGINEERING DESIGN REQUIREMENTS

ROOM CODE	ELECTRICAL LIGHT LEV	ELECTRICAL LIGHT N	ELECTRICAL EM PWR PWR	ELECTRICAL EM PWR LT	ELECTRICAL EM PWR N	MEDICAL GASES MC A	MEDICAL GASES DCA	MEDICAL GASES LA	MEDICAL GASES PA	MEDICAL GASES MV	MEDICAL GASES DHV	MEDICAL GASES DLV	MEDICAL GASES LDE	MEDICAL GASES OX	MEDICAL GASES NO	MEDICAL GASES NI	MEDICAL GASES N	HVAC BL	HVAC AC	HVAC OA	HVAC TEMP SM	HVAC TEMP WN	HVAC RH	HVAC FL IN	HVAC FL FN	HVAC EX	HVAC N
ADMR1	500	.	.	.	.	.	.	.	.	.	.	.	.	.	.	.	.	0	4	1	26	20	.	.	.	.	.
	.	.			.												.				78	68					.
ADP01	500	.	.	.	U	.	.	.	.	.	.	.	.	.	.	.	.	0	6	1.5	26	20	.	.	.	.	.
	700	.			.												.				78	68					.
ADPT1	500	.	.	.	U	.	.	.	.	.	.	.	.	.	.	.	.	0	6	1.5	26	20	.	.	.	.	.
	700	.			.												.				78	68					.
ADPV1	100	.	.	.	U	.	.	.	.	.	.	.	.	.	.	.	.	0	6	1.5	26	20	.	.	.	.	.
	.	.			.												.				78	68					.
ADPXX	500	.	.	LS	.	.	.	.	.	.	.	.	.	.	.	.	.	0	6	2	22	22	.	.	.	.	.
	.	.			.												.				72	72					.
AMB01	50	.	.	LS	.	.	.	.	.	.	.	.	.	.	.	.	.	.	.	.	.	.	.	.	.	.	.
	.	.			.												.				.	.					.
AMB02	50	.	.	LS	.	.	.	.	.	.	.	.	.	.	.	.	.	0	6	4	.	20	.	.	.	Y	H
	.	.			.												.				.	68					.
ANCW1	700	.	R	L	.	1	.	.	.	1	.	.	.	1	1	.	D	-	4	1.5	24	.	.	90	.	Y	.
	.	.			.												.				75	.					.
ANSW1	300	.	R	L	.	1	.	.	.	1	.	.	.	1	1	.	D	-	6	2	24	.	.	90	.	Y	.
	.	.			.												.				75	.					.
APAM1	500	C	R	.		.	.	1	1	.	.	.	1	.	.	.	.	0	6	1.5	26	21	.		.	.	J
	.	.															.				78	70					M
APAM2	500	C	.	.	.	.	.	1	1	.	.	.	1	.	.	.	.	0	6	1.5	26	21	.	.	.	.	J
	.	.			.												.				78	70					M
APFB1	500	C	.	.	.	.	.	1	1	.	.	.	1	.	.	.	J	0	6	1.5	26	21	.	.	.	.	J
	.	.			.												.				78	70					M
APFR1	500	C	.	.	.	.	.	1	1	.	.	.	1	.	.	.	.	0	6	1.5	26	21	.	.	.	.	J
	.	.			.												.				78	70					M
APLA1	500	C	.	.	.	.		.	1	.	.	.	.	.	.	.	.	-	6	1.5	26	21	.	.	.	Y	J
	.	.															.				78	70					M
APMS1	500	C	.	.	.	.	.	.	1	.	.	.	1	.	.	.	.	-	6	1.5	26	21	.	.	.	Y	J
	.	.			.																78	70					M
APSH1	500	C	.	.	.	.	.	.	1	.	.	.	1	.	.	.	.	-	6	1.5	26	21	.	.	.	Y	J
	.	.			.												.				78	70					M

APPENDIX A
ARCHITECTURAL AND ENGINEERING DESIGN REQUIREMENTS

ROOM CODE	ROOM NAME	ARCHITECTURAL MATRL+FIN FL	WAL	CLG	CLG HT	DOOR SIZE	NOISE RM	SC	STRU FLR LOAD
APWA1	APPLIANCE WELDING AREA	VT	GPT	AT1	1200	1200	35	40	D
		.	..	.	8-6	4-0	40		.
AUD01	AUDITORIUM	CP	SSP	SSP	VAR	900	25	50	5
		.	..	.	VAR	3-0	30		100
AVB01	AUDIOVISUAL BOOTH	PF	SPF	SPF	VAR	SP	25	50	3
		.	..	.	VAR	SP	30		60
AVPD1	AUDIOVISUAL PROGRAM DISTRIBUTION	VT	GPT	AT1	2400	900	25	40	3
		.	GAF	.	8-0	3-0	30		60
AVR01	AUDIOVISUAL ROOM	VT	GPT	AT1	2400	900	25	50	3
		.	GAF	.	8-0	3-0	30		60
BF000	BANKING FACILITY - EQ BY OTHERS	VT	GPT	AT1	2600	A	35	40	3
		.	GAF	.	8-6	A	40		60
BLND1	BLIND VENDORS AREA	VT	GPT	AT1	2400	900	35	40	3
		.	..	.	8-0	3-0	40		60
BMCW1	BIOMEDICAL, COMMON WORK AREA	VT	GLG	AT1	2600	1200	35	40	C
		.	..	.	8-6	4-0	40		.
BMER1	BIOMEDICAL, ELECTRONIC REPAIR	VT	GLG	AT1	2600	1200	35	40	C
		.	..	.	8-6	4-0	40		.
BMRA1	BIOMEDICAL, RECEIVING AREA	VT	GLG	AT1	2600	1200	35	40	3
		.	..	.	8-6	4-0	40		60
BMWS1	BIOMEDICAL, WORKSTATION	VT	GLG	AT1	2600	1200	35	40	3
		.	..	.	8-6	4-0	40		60
BRAR1	BEDROOM, ANTEROOM, FOR ISOLATION	VT	GPT	AT1	2600	1200	30	40	3
		SV	GLG	AT2	8-6	4-0	40		60
BRIC1	BEDROOM, INTENSIV/CORONARY, 1 BED	VT	GPT	AT1	2600	H	25	40	3
		SV	GLG	AT2	8-6	4-0	30		60
BRII1	BR, DISEASE.ISOLATION, INTEN. CARE	VT	GPT	AT1	2600	H	25	40	3
		SV	GLG	AT2	8-6		30		60
BRIM1	BR, DISEASE ISOLATION, MED/SURG	VT	GPT	AT1	2600	1200	30	40	3
		SV	GLG	AT2	8-6	4-0	35		60
BRIP1	BR, DISEASE ISOLATION, PEDS, CRIB	VT	GPT	AT1	2600	1200	35	40	3
		SV	GLG	AT2	8-6	4-0	40		60

APPENDIX A
ARCHITECTURAL AND ENGINEERING DESIGN REQUIREMENTS

ROOM CODE	ELECTRICAL LIGHT LEV	N	EM PWR PWR	LT	N	MEDICAL GASES MCA	DCA	LA	PA	MV	DHV	DLV	LDE	OX	NO	NI	N	HVAC BL	AC	OA	TEMP SM	WN	RH	FL IN	FN	EX	N
APWA1	500	C	.	.	.	.	.	.	1	.	.	.	.	.	.	.	.	-	6	1.5	26	21	.	.	.	Y	J
	.	.			.												.				78	70					M
AUD01	300	F	.	LE	.	.	.	.	.	.	.	.	.	.	.	.	.	0	12	*	26	20	.	.	.	.	.
	.	.			.												.				78	68					.
AVB01	300	.	.	.	.	.	.	.	.	.	.	.	.	.	.	.	.	0	4	1	26	20	.	.	.	.	.
	.	.			.												.				78	68					.
AVPD1	300	.	.	.	.	.	.	.	.	.	.	.	.	.	.	.	.	0	4	1	26	20	.	.	.	.	.
	.	.			.												.				78	68					.
AVR01	300	A	.	.	.	.	.	.	.	.	.	.	.	.	.	.	.	0	4	1	26	20	.	.	.	.	.
	.	.			.												.				78	68					.
BF000	500	.	.	LE	.	.	.	.	.	.	.	.	.	.	.	.	.	0	4	1	26	20	.	.	.	.	.
	1100	.			.												.				78	68					.
BLND1	500	.	.	LE	.	.	.	.	.	.	.	.	.	.	.	.	.	.	4	1	26	20	.	.	.	.	.
	.	.			.												.				78	68					.
BMCW1	500	.	.	LE	.	1	1	1	1	1	0	0	0	1	1	1	.	-	4	1	26	20	.	.	.	Y	.
	.	.			.												.				78	68					.
BMER1	1100	.	.	.	.	.	.	.	.	.	.	.	.	.	.	.	.	-	4	1	26	20	.	.	.	Y	.
	.	.			.												.				78	68					.
BMRA1	300	.	.	LE	.	.	.	.	.	.	.	.	.	.	.	.	.	-	4	1	26	20	.	.	.	Y	.
	.	.			.												.				78	68					.
BMWS1	500	.	.	.	.	1	1	1	1	1	.	.	.	1	1	1	B	-	4	1	26	20	.	.	.	.	.
	.	.			.												D				78	68					.
BRAR1	300	.	.	L	.	.	.	.	.	.	.	.	.	.	.	.	.	+-	10	2	24	24	.	90	.	Y	E
	.	.			.												.				75	75					.
BRIC1	300	B	RC	L	.	2	.	.	.	4	.	.	.	2	.	.	.	+	6	2	24	24	Y	90	.	.	P
	1100	.			.												.				75	75					.
BRII1	300	B	RC	L	N	2	.	.	.	4	.	.	.	2	.	.	.	--	12	2	24	24	Y	90	.	Y	PQ
	1100	.			.												.				74	74					E
BRIM1	300	B	RC	L	N.	1	.	.	.	2	.	.	.	1	.	.	A	--	12	2	24	24	.	90	.	Y	E
	1100	.			.												.				75	75					Q
BRIP1	300	B	RC	L	N.	1	.	.	.	2	.	.	.	1	.	.	A	--	12	2	24	24	.	90	.	Y	E
	1100	.			.												.				75	75					Q

APPENDIX A
ARCHITECTURAL AND ENGINEERING DESIGN REQUIREMENTS

ROOM CODE	ROOM NAME	ARCHITECTURAL MATRL+FIN FL	WAL	CLG	CLG HT	DOOR SIZE	NOISE RM	SC	STRU FLR LOAD
BRIS1	BR, DISEASE ISOLATION, STEP-DOWN	VT	GPT	AT1	2600	1200	30	40	3
		SV	GLG	AT2	8-0	4-0	35		60
BRIT1	BEDROOM, DISEASE ISOLATION, TB	VT	GPT	AT1	2600	1200	30	40	3
		SV	GLG	AT2	8-6	4-0	35		60
BRIT2	BR, PROTECTIVE ISOLATION	VT	GPT	AT1	2400	1200	30	40	3
		SV	GLG	AT2	8-6	4-0	35		60
BRLC1	BEDROOM, LIGHT CARE, 1 BED	VT	GPT	AT1	2600	1200	30	40	3
		.	GVF	.	8-6	4-0	35		60
BRLC2	BEDROOM, LIGHT CARE, 2 BEDS	VT	GPT	AT1	2600	1200	30	40	3
		.	GVF	.	8-6	4-0	35		60
BRLC4	BEDROOM, LIGHT CARE, 4 BEDS	VT	GPT	AT1	2600	1200	30	40	3
		.	GVF	.	8-6	4-0	35		60
BRMS1	BEDROOM, MEDICAL/SURGICAL, 1 BED	VT	GPT	AT1	2600	1200	30	40	3
		.	GVF	.	8-6	4-0	35		60
BRMS2	BEDROOM, MEDICAL/SURGICAL, 2 BEDS	VT	GPT	AT1	2600	1200	30	40	3
		.	GVF	.	8-6	4-0	35		60
BRMS4	BEDROOM, MEDICAL/SURGICAL, 4 BEDS	VT	GPT	AT1	2600	1200	30	40	3
		.	GVF	.	8-6	4-0	35		60
BRNP1	BEDROOM, NEURO/PSYCH, 1 BED	VT	GPT	GPT	2600	1200	35	40	3
		.	..	.	8-6	4-0	40		60
BRNP2	BEDROOM, NEURO/PSYCH, 2 BEDS	VT	GPT	GPT	2600	1200	35	40	3
		.	..	.	8-6	4-0	40		60
BRNP4	BEDROOM, NEURO/PSYCH, 4 BEDS	VT	GPT	GPT	2600	1200	35	40	3
		.	..	.	8-6	4-0	40		60
BRNP5	BEDROOM, NEURO/PSYCH, SECLUSION	VT	GPT	GPT	2600	1200	35	40	3
		.	VP	VP	8-6	4-0	40		60
BRNP6	BEDROOM, N/P, SECLUSION ANTEROOM	VT	GVF	AT1	2600	1200	30	40	3
			VP	VP	8-6	4-0	35		60
BRNS1	BEDROOM NURSE SERVER	V	GPT	AT1	2400	SP	30	40	3
		.	GLG	AT2	8-0		35		60
BRNS2	BEDROOM NURSE SERVER PEDIATRICS	VT	GPT	AT1	2400	SP	30	40	3
		.	GVF	AT2	8-0		35		60

APPENDIX A
ARCHITECTURAL AND ENGINEERING DESIGN REQUIREMENTS

ROOM CODE	ELECTRICAL LIGHT LEV	N	EM PWR PWR	LT	N	MEDICAL GASES MC A	DC A	LA A	PA A	MV A	DHV A	DLV A	DLE A	OX A	NO A	NI A	N A	HVAC BL	AC	OA	TEMP SM	WN	RH	FL IN	FN	EX	N
BRIS1	300	B	RC	L	N	1	.	.	.	3	.	.	.	2	.	.	A	--	12	2	24	24	.	90	.	Y	E
	1100	.			.												.				75	75					Q
BRIT1	300	B	RC	L	N	1	.	.	.	.	.	.	.	.	.	.	.	--	12	2	24	24	.	90	.	Y	E
	1100	.			.												.				75	75					Q
BRIT2	300	B	RC	L	N	1	.	.	.	.	.	.	.	.	.	.	.	++	15	2	24	24	.	90	99	Y	E
	1100	.			.												.				75	75					
BRLC1	100	C	.	.	U	1	.	.	.	1	.	.	.	1	.	.	A	0	4	2	24	24	.	90	.	.	.
	300	.			.												.				75	75					.
BRLC2	100	C	R	LS	.	1	.	.	.	2	.	.	.	2	.	.	A	0	4	2	24	24	.	90	.	.	.
	300	.			.												M				75	75					.
BRLC4	100	C	R	LS	.	2	.	.	.	4	.	.	.	4	.	.	A	0	4	2	24	24	.	90	.	.	.
	300	.			.												M				75	75					.
BRMS1	100	C	R1	.	.	1	.	.	.	1	.	.	.	1	.	.	A	0	4	2	24	24	.	90	.	.	.
	300	.			.												.				75	75					.
BRMS2	100	C	R1	LS	.	1	.	.	.	2	.	.	.	2	.	.	A	0	4	2	24	24	.	90	.	.	.
	300	.			.												M				75	75					.
BRMS4	100	C	R1	LS	.	2	.	.	.	4	.	.	.	4	.	.	A	0	4	2	24	24	.	90	.	.	.
	300	.			.												M				75	75					.
BRNP1	100	C	.	LS	.	1	.	.	.	1	.	.	.	1	.	.	A	0	6	2	24	24	.	90	.	.	.
	300	.			.												.				75	75					.
BRNP2	100	C	.	LS	.	1	.	.	.	1	.	.	.	1	.	.	A	0	4	2	24	24	.	90	.	.	.
	300	.			.												M				75	75					.
BRNP4	100	C	.	LS	.	2	.	.	.	2	.	.	.	2	.	.	A	0	4	2	24	24	.	90	.	.	.
	300	.			.												M				75	75					.
BRNP5	100	C	.	LS	.	1	.	.	.	1	.	.	.	1	.	.	A	0	6	2	24	24	.	90	.	.	.
	300	.			.												.				75	75					.
BRNP6	300	.	.	.	.	.	.	.	.	.	.	.	.	.	.	.	.	0	4	2	24	24	.	90	.	.	.
	.	.			.												.				75	75					.
BRNS1	.	.	.	.	.	.	.	.	.	.	.	.	.	.	.	.	.	-	2	.	24	24	.	.	.	Y	.
	.	.			.												.				75	75					.
BRNS2	.	.	.	.	.	.	.	.	.	.	.	.	.	.	.	.	.	-	2	.	24	24	.	.	.	Y	.
	.	.			.												.				75	75					.

APPENDIX A
ARCHITECTURAL AND ENGINEERING DESIGN REQUIREMENTS

ROOM CODE	ROOM NAME	ARCHITECTURAL MATRL+FIN FL	WAL	CLG	CLG HT	DOOR SIZE	NOISE RM	SC	STRU FLR LOAD
BRNS3	BEDROOM NURSE SERVER ICU/CCU	VT	GPT	AT1	2400	SP	30	40	3
		SV	GLG	AT2	8-0		35		60
BROR1	BEDROOM, ORTHOPEDICS, 1 BED	VT	GPT	AT1	2600	1200	30	40	3
		.	GVF	.	8-6	4-0	35		60
BROR2	BEDROOM, ORTHOPEDICS, 2 BEDS	VT	GPT	AT1	2600	1200	30	40	3
		.	GVF	.	8-6	4-0	35		60
BROR4	BEDROOM, ORTHOPEDICS, 4 BEDS	VT	GPT	AT1	2600	1200	30	40	3
		.	GVF	.	8-6	4-0	35		60
BRPB1	BEDROOM, PEDIATRICS, 1 BED	VT	GPT	AT1	2600	1200	35	40	3
		.	GVF	.	8-6	4-0	40		60
BRPB2	BEDROOM, PEDIATRICS, 2 BEDS	VT	GPT	AT1	2600	1200	35	40	3
		.	GVF	.	8-6	4-0	40		60
BRPC1	BEDROOM, PEDIATRICS, 1 CRIB	VT	GPT	AT1	2600	1200	35	40	3
		.	GVF	.	8-6	4-0	40		60
BRPC2	BEDROOM, PEDIATRICS, 2 CRIBS	VT	GPT	AT1	2600	1200	35	40	3
		.	GVF	.	8-6	4-0	40		60
BRPC4	BEDROOM, PEDIATRICS, 4 CRIBS	VT	GPT	AT1	2600	1200	35	40	3
		.	GVF	.	8-6	4-0	40		60
BRSD1	BEDROOM, STEP-DOWN, 1 BED	VT	GPT	AT1	2600	1200	30	40	3
		.	GVF	.	8-6	4-0	35		60
BRSD2	BEDROOM, STEP-DOWN, 2 BEDS	VT	GPT	AT1	2600	1200	30	40	3
		.	GVF	.	8-6	4-0	35		60
BRSD4	BEDROOM, STEP-DOWN, 4 BEDS	VT	GPT	AT1	2600	1200	30	40	3
		.	GVF	.	8-6	4-0	35		60
BX000	EXCHANGE AREA - EQUIP BY OTHERS	VT	GPT	AT1	2600	1200	35	40	3
		.	..	.	8-6	4-0	40		60
BX001	EXCHANGE VENDING AREA - UTILITY RQD	VT	GPT	AT1	2600	1200	35	50	C
		.	..	.	8-6	4-0	40		
CASH1	CASHIER	VT	GPT	AT1	2600	OPEN	35	50	3
		CP	GVF	.	8-6	OPEN	40		60
CHC01	CART HOLDING, CLEAN	VT	GPT	AT1	2400	900	35	40	5
		.	..	.	8-0	3-0	40		100

APPENDIX A
ARCHITECTURAL AND ENGINEERING DESIGN REQUIREMENTS

ROOM CODE	ELECTRICAL LIGHT LEV	N	EM PWR PWR	LT	N	MEDICAL GASES M C A	D C A	L A	P A	M V	D H V	D L V	L D E	O X	N O	N I	N	HVAC BL	AC	OA	TEMP SM	WN	R H	FL IN	FN	E X	N
BRNS3	.	.	.	.	.	.	.	.	.	.	.	.	.	.	.	.	.	-	2	.	24	24	.	.	.	Y	.
	.	.			.												.				75	75					.
BROR1	100	C	R1	LS	.	1	.	.	.	1	.	.	.	1	.	.	A	0	4	2	24	24	.	90	.	.	.
	300	.			.												.				75	75					.
BROR2	100	C	R1	LS	.	1	.	.	.	2	.	.	.	2	.	.	A	0	4	2	24	24	.	90	.	.	.
	300	.			.												M				75	75					.
BROR4	100	C	R1	LS	.	2	.	.	.	4	.	.	.	4	.	.	A	0	4	2	24	24	.	90	.	.	.
	300	.			.												.				75	75					.
BRPB1	100	C	R1	LS	.	1	.	.	.	1	.	.	.	1	.	.	A	0	4	2	24	24	.	90	.	.	.
	300	.			.												.				75	75					.
BRPB2	100	C	R1	LS	.	1	.	.	.	2	.	.	.	2	.	.	A	0	4	2	24	24	.	90	.	.	.
	300	.			.												.				75	75					.
BRPC1	100	C	R1	LS	.	1	.	.	.	1	.	.	.	1	.	.	A	0	4	2	24	24	.	90	.	.	.
	300	.			.												.				75	75					.
BRPC2	100	C	R1	LS	.	1	.	.	.	2	.	.	.	2	.	.	A	0	4	2	24	24	.	90	.	.	.
	300	.			.												.				75	75					.
BRPC4	100	C	R1	.	.	2	.	.	.	4	.	.	.	4	.	.	A	0	4	2	24	24	.	90	.	.	.
	300	.			.												.				75	75					.
BRSD1	100	C	R1	LS	.	1	.	.	.	3	.	.	.	2	.	.	A	0	4	2	24	24	.	90	.	.	.
	300	.			.												.				75	75					.
BRSD2	100	C	R1	LS	.	2	.	.	.	6	.	.	.	2	.	.	A	0	4	2	24	24	.	90	.	.	.
	300	.			.												.				75	75					.
BRSD4	100	C	R1	LS	.	1	.	.	.	3	.	.	.	2	.	.	A	0	4	2	24	24	.	90	.	.	.
	300	.			.												B				75	75					.
BX000	500	.	.	LE	.	.	.	.	.	.	.	.	.	.	.	.	.	0	4	1	24	24	.	.	.	.	.
	.	.			.												.				75	75					.
BX001	150	.	.	.	.	.	.	.	.	.	.	.	.	.	.	.	.	.	.	.	.	.	.	.	.	.	
	.	.			.												.				.	.					.
CASH1	500	.	.	LE	.	.	.	.	.	.	.	.	.	.	.	.	.	0	4	1	26	21	.	.	.	.	.
	.	.			.												.				78	70					.
CHC01	50	.	.	.	.	.	.	.	.	.	.	.	.	.	.	.	.	+	4	1	26	21	.	90	.	.	.
	.	.			.												.				78	70					.

APPENDIX A
ARCHITECTURAL AND ENGINEERING DESIGN REQUIREMENTS

ROOM CODE	ROOM NAME	ARCHITECTURAL MATRL+FIN FL	WAL	CLG	CLG HT	DOOR SIZE	NOISE RM	SC	STRU FLR LOAD
CHS01	CART HOLDING, SOILED	VT	GLG	AT1	2400	900	35	40	5
		.	..	.	8-0	3-0	40		100
CLPE1	CLASSROOM, PATIENT EDUCATION	CP	GVF	AT1	2600	900	30	40	3
		.	..	.	8-6	3-0	40		60
CLR01	CLASSROOM, TABLE/CHAIR	CP	GVF	AT1	2600	900	25	45	3
		.	GPT	.	8-6	3-0	30		60
CLR02	CLASSROOM, WRITING ARM CHAIRS	CP	GVF	AT1	2600	900	25	45	3
		.	GPT	.	8-6	3-0	30		60
CLR03	CLASSROOM/LIBRARY TABLE/CHAIRS	CP	GVF	AT1	2600	900	25	45	3
		.	GPT	.	8-6	3-0	30		60
CLR04	CLASSROOM, 2 BED ROOM MOCK-UP	VT	GPT	AT1	2600	1200	25	45	3
		.	GVF	.	8-6	4-0	30		60
CLRS1	CLASSROOM SPEECH THERAPY	CP	GVF	AT1	2600	900	25	45	3
		.	GPT	.	8-6	3-0	30		60
CLSC1	CLASSROOM STUDENT CARREL, 1 CARREL	CP	GVF	AT1	2600	900	25	45	3
		.	GPT	.	8-6	3-0	30		60
COM01	COMMUNICATIONS CLINICAL EMS	VT	GPT	AT1	2400	900	35	40	3
		.	GVF	.	8-0	3-0	40		60
COM02	COMMUNICATIONS AMBULANCE DISPATCH	VT	GPT	AT1	2400	900	35	40	3
		.	GVF	.	8-0	3-0	40		60
COM03	COMMUNICATIONS ROOM-CENTRAL SECURIT	VT	GPT	AT1	2400	900	25	40	3
		.	..	.	8-0	3-0	30		60
CORRA	CORRIDORS, ADMIN	VT	GVF	AT1	2400	900	35	45	5
		CP	..	.	8-0	3-0	40		100
CORRC	CORRIDORS, CLINICS	VT	GVF	AT1	2400	900	35	45	5
		CP	..	.	8-0	3-0	40		100
CORRH	CORRIDORS, HEAVY CARTS	VT	GVF	AT1	2400	C	35	45	5
		.	..	.	8-0		40		100
CORRW	CORRIDORS, WARDS	VT	GVF	AT1	2600	C	35	45	4
		CP	..	.	8-6		40		80
CRA01	CONFERENCE ROOM, ADMINISTRATIVE	CP	GVF	AT1	2600	900	25	40	3
		.	GPT	.	8-6	3-0	30		60

APPENDIX A
ARCHITECTURAL AND ENGINEERING DESIGN REQUIREMENTS

ROOM CODE	ELECTRICAL LIGHT LEV	N	EM PWR PWR	LT	N	MEDICAL GASES M C A	D C A	L A	P A	M V	D H V	D L V	L D E	O X	N O	N I	N	HVAC BL	AC	OA	TEMP SM	WN	R H	FL IN	FN	E X	N
CHS01	50	.	.	.	.	.	.	.	.	.	.	.	.	.	.	.	.	-	10	1	26	21	.	.	.	Y	.
	.	.			.												.				78	70					.
CLPE1	700	F	.	LE	.	.	.	.	.	.	.	.	.	.	.	.	.	0	6	*	26	21	.	.	.	.	.
	.	.			.												.				78	70					.
CLR01	700	F	.	LE	.	.	.	.	.	.	.	.	.	.	.	.	.	0	6	*	26	21	.	.	.	.	.
	.	.			.												.				78	70					.
CLR02	700	F	.	LE	.	.	.	.	.	.	.	.	.	.	.	.	.	0	6	*	26	21	.	.	.	.	.
	.	.			.												.				78	70					.
CLR03	700	F	.	LE	.	.	.	.	.	.	.	.	.	.	.	.	.	0	6	*	26	21	.	.	.	.	.
	.	.			.												.				78	70					.
CLR04	100	.	.	LE	.	.	.	.	.	.	.	.	.	.	.	.	.	0	12	*	26	21	.	.	.	.	.
	300	.			.												.				78	70					.
CLRS1	700	F	.	LE	.	.	.	.	.	.	.	.	.	.	.	.	.	0	6	*	26	21	.	.	.	.	.
	.	.			.												.				78	70					.
CLSC1	700	F	.	LE	.	.	.	.	.	.	.	.	.	.	.	.	.	0	6	*	26	21	.	.	.	.	.
	.	.			.												.				78	70					.
COM01	200	.	.	L	E	.	.	.	.	.	.	.	.	.	.	.	.	0	4	1	26	21	.	.	.	.	.
	.	.			.												.				78	70					.
COM02	200	.	.	L	E	.	.	.	.	.	.	.	.	.	.	.	.	0	4	1	26	21	.	.	.	.	.
	.	.			.												.				78	70					.
COM03	200	.	R	L	.	.	.	.	.	.	.	.	.	.	.	.	.	0	4	1	26	21	.	.	.	.	.
	.	.			.												.				78	70					.
CORRA	150	.	.	LE	.	.	.	.	.	.	.	.	.	.	.	.	.	0	4	1	26	20	.	.	.	.	.
	.	.			.												.				78	68					.
CORRC	150	.	.	LE	.	.	.	.	.	.	.	.	.	.	.	.	.	0	4	1	26	20	.	.	.	.	.
	.	.			.												.				78	68					.
CORRH	150	.	.	LE	.	.	.	.	.	.	.	.	.	.	.	.	.	0	4	1	26	20	.	.	.	.	.
	.	.			.												.				78	68					.
CORRW	150	C	.	LE	.	.	.	.	.	.	.	.	.	.	.	.	.	0	4	1	26	20	.	.	.	.	.
	50	.			.												.				78	68					.
CRA01	300	.	.	LE	.	.	.	.	.	.	.	.	.	.	.	.	.	0	6	*	26	21	.	.	.	.	.
	.	.			.												.				78	70					.

APPENDIX A
ARCHITECTURAL AND ENGINEERING DESIGN REQUIREMENTS

ROOM CODE	ROOM NAME	ARCHITECTURAL MATRL+FIN FL	WAL	CLG	CLG HT	DOOR SIZE	NOISE RM	SC	STRU FLR LOAD
CRC01	CONFERENCE ROOM, COMMANDERS	CP	GVF	AT1	2600	900	25	40	3
		.	GPT	.	8-6	3-0	30		60
CRCS1	CONFERENCE RM, CLINICAL SERVICES,SM	CP	GVF	AT1	2600	900	25	40	3
		.	GPT	.	8-6	3-0	30		60
CRCS2	CONFERENCE RM, CLINICAL SERVICES,LG	CP	GVF	AT1	2600	900	25	40	3
		.	GPT	.	8-6	3-0	30		60
CRR01	CONFERENCE ROOM, RADIOLOGY, SM		GVF	AT1	2600	900	25	40	3
		CP	GPT	GPT	8-6	3-0	30		60
CRR02	CONFERENCE ROOM, RADIOLOGY, LG	CP	GVF	AT1	2600	900	25	40	3
		.	GPT	GPT	8-6	3-0	30		60
CRWD1	CONFERENCE ROOM, WARD	CP	GVF	AT1	2600	900	25	40	3
		.	..	.	8-6	3-0	30		60
CSBG1,	CMS BENCH-TOP ETO	SV	GLG	AT2	2700	900	35	40	5
		ET	..	GLG	9-0	3-0	40		100
CSBR1,	CMS BREAKOUT ROOM	SV	GLG	AT2	2700	900	35	40	3
		ET	..	GLG	9-0	3-0	40		60
CSCL1	CMS,CLINIC DECON/REC. (DIRTY) SMALL	SV	GLG	AT2	2700	900	35	40	3
		ET	..	GLG	9-0	3-0	40		60
CSCL2	CMS,CLINIC DECON/REC. (DIRTY) LARGE	SV	GLG	AT2	2700	900	35	40	3
		ET	..	GLG	9-0	3-0	40		60
CSCL3	CMS, CLINIC STER 1 SMALL	SV	GLG	AT2	2700	900	35	40	3
		ET	..	GLG	9-0	3-0	40		60
CSCL4	CMS, CLINIC STER 2 SMALL	SV	GLG	AT2	2700	900	35	40	3
		ET	..	GLG	9-0	3-0	40		60
CSCL5	CMS, CLINIC STER 1 LARGE	SV	GLG	AT2	2700	900	35	40	3
		ET	..	GLG	9-0	3-0	40		60
CSCL6	CMS, CLINIC STER 2 LARGE	SV	GLG	AT2	2700	900	35	40	3
		ET	..	GLG	9-0	3-0	40		60
CSCL7	CMS,CLINIC STER STR SM	SV	GLG	AT2	2700	900	35	40	3
		ET	..	GLG	9-0	3-0	40		60
CSCL8	CMS CLINIC STER STR LG	SV	GLG	AT2	2700	B	35	40	6
		ET	..	GLG	9-0		40		125

APPENDIX A
ARCHITECTURAL AND ENGINEERING DESIGN REQUIREMENTS

ROOM CODE	ELECTRICAL LIGHT LEV	N	EM PWR PWR	LT	N	MEDICAL GASES MC A	DC A	LA	PA	MV	DHV	DLV	LDE	OX	NO	NI	N	HVAC BL	AC	OA	TEMP SM	WN	RH	FL IN	FN	EX	N
CRC01	300	.	.	LE	.	.	.	.	.	.	.	.	.	.	.	.	.	0	6	*	26	21	.	.	.	.	.
	.	.			.												.				78	70					.
CRCS1	300	.	.	LE	.	.	.	.	.	.	.	.	.	.	.	.	.	0	6	*	26	21	.	.	.	.	.
	.	.			.												.				78	70					.
CRCS2	300	.	.	LE	.	.	.	.	.	.	.	.	.	.	.	.	.	0	6	*	26	21	.	.	.	.	.
	.	.			.												.				78	70					.
CRR01	300	F	.	LE	.	.	.	.	.	.	.	.	.	.	.	.	.	0	6	*	26	21	.	.	.	.	.
	.	.			.												.				78	70					.
CRR02	300	F	.	LE	.	.	.	.	.	.	.	.	.	.	.	.	.	0	6	*	26	21	.	.	.	.	.
	.	.			.												.				78	70					.
CRWD1	300	.	.	LE	.	.	.	.	.	.	.	.	.	.	.	.	.	0	6	*	26	21	.	.	.	.	.
	.	.			.												.				78	70					.
CSBG1	700	.	.	.	U	.	.	.	.	.	.	.	.	.	.	.	.	-	10	.	26	20	.	.	.	Y	G
	.	.			.												.				78	68					M
CSBR1	700	.	.	.	U	.	.	.	.	.	.	.	.	.	.	.	.	.	6	2.0	26	20	.	.	.	Y	.
	.	.			.												.				78	68					.
CSCL1	700	.	.	.	U	1	.	.	.	1	.	.	.	1	.	.	.	-	10	2.5	26	20	.	.	.	Y	M
	.	.			.												.				78	78					.
CSCL2	700	.	.	.	U	1	.	.	.	1	.	.	.	1	.	.	I	-	10	2.5	26	20	.	.	.	Y	M
	.	.			.												.				78	68					.
CSCL3	700	.	.	.	U	.	.	.	.	.	.	.	.	.	.	.	.	+	10	2.5	26	20	.	90	.	.	.
	.	.			.												.				78	68					.
CSCL4	700	.	.	.	U	.	.	.	.	.	.	.	.	.	.	.	.	+	10	2.5	26	20	.	90	.	.	.
	.	.			.												.				78	68					.
CSCL5	700	.	.	.	U	.	.	.	.	.	.	.	.	.	.	.	.	+	10	2.5	26	20	.	90	.	.	.
	.	.			.												.				78	68					.
CSCL6	700	.	.	.	U	.	.	.	.	.	.	.	.	.	.	.	.	+	10	2.5	26	20	.	90	.	.	.
	.	.			.												.				78	68					.
CSCL7	700	.	.	.	.	.	.	.	.	.	.	.	.	.	.	.	.	+	4	1	26	20	.	90	.	.	.
	.	.			.												.				78	68					.
CSCL8	700	.	.	.	.	.	.	.	.	.	.	.	.	.	.	.	.	+	4	1	26	20	.	90	.	.	.
	.	.			.												.				78	68					.

APPENDIX A
ARCHITECTURAL AND ENGINEERING DESIGN REQUIREMENTS

ROOM CODE	ROOM NAME	ARCHITECTURAL MATRL+FIN FL	WAL	CLG	CLG HT	DOOR SIZE	NOISE RM	SC	STRU FLR LOAD
CSCQ1	CMS, CART QUEUING	SV	GLG	AT2	2700	B	35	40	5
		ET	..	GLG	9-0		40		100
CSCR1	CMS, CART RECEIVING	SV	GLG	AT2	2700	900	35	40	5
		ET	..	GLG	9-0	3-0	40		100
CSDS1	CMS, PREP/WORK AREA (DIRTY)	SV	GLG	AT2	2700	900	35	40	3
		ET	..	GLG	9-0	3-0	40		60
CSEW1	CMS, EQUIP WASH & DRY	QT	GLG	AT2	2700	900	35	40	5
		.	..	GLG	9-0	3-0	40		100
CSHA1	CMS, HOLDING AREA	SV	GLG	AT2	2700	900	35	40	5
		ET	..	GLG	9-0	3-0	40		100
CSIA1	CMS, INSTRUMENT ASSEMBLY	SV	GLG	AT2	2700	900	35	40	5
		ET	..	GLG	9-0	3-0	40		100
CSIS1	CMS, INSTRUMENT STORAGE	SV	GLG	AT2	2700	900	35	40	6
		ET	..	GLG	9-0	3-0	40		125
CSLG1	CMS, LARGE GAS 1 DOOR	SV	GLG	AT2	2700	900	35	40	5
		ET	..	GLG	9-0	3-0	40		100
CSLG2	CMS, LARGE GAS 2 DOOR	SV	GLG	AT2	2700	900	35	40	5
		ET	..	GLG	9-0	3-0	40		100
CSLS1	CMS, LARGE STEAM 1 DOOR	SV	GLG	AT2	2700	900	35	40	5
		ET	..	GLG	9-0	3-0	40		100
CSLS2	CMS, LARGE STEAM 2 DOOR	SV	GLG	AT2	2700	900	35	40	5
		ET	..	GLG	9-0	3-0	40		100
CSMG1	CMS, MEDIUM GAS 1 DOOR	SV	GLG	AT2	2700	900	35	40	5
		ET	..	GLG	9-0	3-0	40		100
CSMG2	CMS, MEDIUM GAS 2 DOOR	SV	GLG	AT2	2700	900	35	40	5
		ET	..	GLG	9-0	3-0	40		100
CSMS1	CMS, MEDIUM STEAM 1 DOOR	SV	GLG	AT2	2700	900	35	40	5
		ET	..	GLG	9-0	3-0	40		100
CSMS2	CMS, MEDIUM STEAM 2 DOOR	SV	GLG	AT2	2700	900	35	40	5
		ET	..	GLG	9-0	3-0	40		100
CSSG1	CMS, SMALL GAS 1 DOOR	SV	GLG	AT2	2700	900	35	40	5
		ET	..	GLG	9-0	3-0	40		100

APPENDIX A
ARCHITECTURAL AND ENGINEERING DESIGN REQUIREMENTS

ROOM CODE	ELECTRICAL LIGHT LEV	N	EM PWR PWR	LT	N	MEDICAL GASES M C A	D C A	L A	P A	M V	D H V	D L V	L D E	O X	N O	N I	N	HVAC BL	AC	OA	TEMP SM	WN	R H	FL IN	FN	E X	N
CSCQ1	50	.	.	.	.	.	.	.	.	.	.	.	.	.	.	.	.	-	6	1	26	20	.	.	.	Y	.
	.	.			.												.				78	68					.
CSCR1	100	.	.	.	.	.	.	.	.	.	.	.	.	.	.	.	.	+	6	1	26	20	.	.	.	.	.
	.	.			.												.				78	68					.
CSDS1	700	.	.	.	U	.	.	.	.	.	.	.	.	.	.	.	.	-	10	2	26	20	.	90.		.	.
	.	.			.												.				78	68					.
CSEW1	700	.	.	.	U	.	.	.	.	.	.	.	.	.	.	.	.	-	10	2	26	20	.	90	.	Y	.
	.	.			.												.				78	68					.
CSHA1	300	.	.	.	.	.	.	.	.	.	.	.	.	.	.	.	.	+	6	1.5	26	20	.	90	.	.	.
	.	.			.												.				78	68					.
CSIA1	1100	.	.	.	U	1	.	.	.	1	.	.	.	1	.	.	I	+	6	1.5	26	20	.	90	.	.	.
	.	.			.												.				78	68					.
CSIS1	300	.	.	.	U	.	.	.	.	.	.	.	.	.	.	.	.	+	6	1.5	26	20	.	90	.	.	.
	.	.			.												.				78	68					.
CSLG1	300	.	.	.	U	.	.	.	.	.	.	.	.	.	.	.	.	-	10	2.5	26	20	.	90	.	Y	.
	.	.			.												.				78	68					.
CSLG2	300	.	.	.	U	.	.	.	.	.	.	.	.	.	.	.	.	-	10	2.5	26	20	.	90	.	Y	F
	.	.			.												.				78	68					.
CSLS1	300	.	.	.	U	.	.	.	.	.	.	.	.	.	.	.	.	-	10	2.5	26	20	.	90	.	Y	.
	.	.			.												.				78	68					.
CSLS2	300	.	.	.	U	.	.	.	.	.	.	.	.	.	.	.	.	-	10	2.5	26	20	.	90	.	Y	M
	.	.			.												.				78	68					.
CSMG1	300	.	.	.	U	.	.	.	.	.	.	.	.	.	.	.	.	-	10	2.5	26	20	.	90	.	Y	M
	.	.			.												.				78	68					.
CSMG2	300	.	.	.	U	.	.	.	.	.	.	.	.	.	.	.	.	-	10	2.5	26	20	.	90.		Y	M
	.	.			.												.				78	68					.
CSMS1	300	.	.	.	U	.	.	.	.	.	.	.	.	.	.	.	.	-	10	2.5	26	20	.	90	.	Y	M
	.	.			.												.				78	68					.
CSMS2	300	.	.	.	U	.	.	.	.	.	.	.	.	.	.	.	.	-	10	2.5	26	20	.	90	.	Y	M
	.	.			.												.				78	68					.
CSSG1	300	.	.	.	U	.	.	.	.	.	.	.	.	.	.	.	.	-	10	2.5	26	20	.	90	.	Y	M
	.	.			.												.				78	68					.

APPENDIX A
ARCHITECTURAL AND ENGINEERING DESIGN REQUIREMENTS

ROOM CODE	ROOM NAME	ARCHITECTURAL MATRL+FIN FL	WAL	CLG	CLG HT	DOOR SIZE	NOISE RM	SC	STRU FLR LOAD
CSSG2	CMS, SMALL GAS 2 DOOR	SV	GLG	AT2	2700	900	35	40	5
		ET	..	GLG	9-0	3-0	40		100
CSSS1	CMS, SMALL STEAM 1 DOOR	SV	GLG	AT2	2700	900	35	40	5
		ET	..	GLG	9-0	3-0	40		100
CSSS2	CMS, SMALL STEAM 2 DOOR	SV	GLG	AT2	2700	900	35	40	5
		ET	..	GLG	9-0	3-0	40		100
CSTW1	CMS, TABLE AND WORK SPC	SV	GLG	AT2	2700	900	35	40	5
		ET	..	GLG	9-0	3-0	40		100
CSUC1	CMS, ULTRASONIC CLEANING	SV	GLG	AT2	2700	900	35	40	5
		ET	..	GLG	9-0	3-0	40		100
CSWM1	CMS, WATER MAKEUP SINK	SV	GLG	AT2	2700	900	35	40	5
		ET	..	GLG	9-0	3-0	40		100
CSWP1	CMS, WASHER/PAST & DRY	SV	GLG	AT2	2700	900	35	40	C
		ET	..	GLG	9-0	3-0	40		C
CSWS1	CMS, WASHER STER MANUAL	SV	GLG	AT2	2700	900	35	40	5
		ET	..	GLG	9-0	3-0	40		100
CSWS2	CMS, WASHER STER AUTO	SV	GLG	AT2	2700	900	35	40	5
		ET	..	GLG	9-0	3-0	40		100
CWSH1	CART WASH, MANUAL	QT	GCT	GLG	2700	B	35	40	5
		.	..	.	9-0	.	40		100
CWSH2	CART WASH, AUTOMATED WASHER	QT	GCT	GLG	2700	900	35	40	C
		.	..	.	9-0	3-0	40		C
DAYR1	DAYROOM, WARD	CP	GVF	AT1	2600	1200	35	40	3
		.	GPT	.	8-6	4-0	40		60
DAYR2	DAYROOM, PEDIATRICS	CP	GVF	AT1	2600	1200	35	40	3
		.	GPT	.	8-6	4-0	40		60
DNPB1	DENT PROSTHETICS, ORTHODONTIC LAB	SV	GLG	AT1	2700	900	35	40	3
		VT	GPT	.	9-0	3-0	40		60
DNPC1	DENT ROOM CERAMICS	SV	GLG	AT1	2700	1050	35	50	3
		VT	GPT	.	9-0	3-6	40		60
DNPF1	DENT PROSTHETICS LAB, FULL FUNCT'N	SV	GLG	AT1	2700	400	35	40	3
		VT	GPT	.	9-0	3-0	40		60

APPENDIX A
ARCHITECTURAL AND ENGINEERING DESIGN REQUIREMENTS

ROOM CODE	ELECTRICAL LIGHT LEV	N	EM PWR PWR	LT	N	MEDICAL GASES MCA	DCA	LAA	PAA	MVV	DHV	DLV	LDE	OXO	NOI	NIN	HVAC BL	AC	OA	TEMP SM	WN	RH	FL IN	FN	EX	N
CSSG2	300	.	.	.	U	.	.	.	.	.	.	.	.	.	.	.	-	10	2.5	26	20	.	90	.	Y	M
	.	.			.											.				78	68					.
CSSS1	300	.	.	.	U	.	.	.	.	.	.	.	.	.	.	.	-	10	2.5	26	20	.	90	.	Y	M
	.	.			.											.				78	68					.
CSSS2	300		.	.	U	.	.	.									-	10	2.5	26	20	.	90	.	Y	M
	.	.			.											.				78	68					.
CSTW1	700	.	.	.	U	.	.	.	.	.	.	.	.	.	.	.	+	6	1.5	26	20	.	90	.	.	.
	.	.			.											.				78	68					.
CSUC1	700	.	.	.	U	.	.	.	.	.	.	.	.	.	.	.	-	6	1.5	26	20	.	90	.	Y	.
	.	.			.											.				78	68					.
CSWM1	500	.	.	.	U	.	.	.	.	.	.	.	.	.	.	.	-	6	1.5	26	20	.	90	.	Y	.
	.	.			.											.				78	68					.
CSWP1	500	.	.	.	U	.	.	.	.	.	.	.	.	.	.	.	-	10	2.5	26	20	.	90	.	Y	M
	.	.			.											.				78	68					.
CSWS1	500	.	.	.	U	.	.	.	.	.	.	.	.	.	.	.	-	10	2.5	26	20	.	90	.	Y	M
	.	.			.											.				78	68					.
CSWS2	500	.	.	.	U	.	.	.	.	.	.	.	.	.	.	.	-	10	2.5	26	20	.	90	.	Y	.
	.	.			.											.				78	28					.
CWSH1	300	.	.	.	.	.	.	.	.	.	.	.	.	.	.	.	-	10	2.5	26	20	.	90	.	Y	M
	.	.			.											.				78	68					.
CWSH2	300	.	.	.	.	.	.	.	.	.	.	.	.	.	.	.	-	10	2.5	26	20	.	90	.	Y	M
	.	.			.											.				78	68					.
DAYR1	150	.	.	LE	.	.	.	.	.	.	.	.	.	.	.	.	0	6	2	26	20	.	90	.	.	.
	.	.			.											.				78	68					.
DAYR2	150	.	.	LE	.	.	.	.	.	1	.	.	.	1	.	.	B	0	6	2	26	20	.	90	.	.	.
	.	.			.											.				78	68					.
DNPB1	700	C	.	.	.	.	1	1	1	.	.	.	1	.	.	.	B	-	6	2	26	20	.	80	.	Y	M
	.	.			.											.				78	68					.
DNPC1	700	C	.	.	.	.	1	1	1	.	.	.	1	.	.	.	B	+	10	2.5	26	20	.	80	.	Y	M
	.	.			.											.				78	68					.
DNPF1	700	.	.	.	.	.	1	1	1	.	.	.	1	.	.	.	B	-	10	2.5	26	20	.	80	.	Y	M
	.	.			.											.				78	68					.

APPENDIX A
ARCHITECTURAL AND ENGINEERING DESIGN REQUIREMENTS

ROOM CODE	ROOM NAME	ARCHITECTURAL MATRL+FIN FL	WAL	CLG	CLG HT	DOOR SIZE	NOISE RM	SC	STRU FLR LOAD
DNPL1	DENT PROSTHETICS LAB, LIMITED	SV	GLG	AT1	2700	900	35	40	3
		VT	GPT	.	9-0	3-0	40		60
DNRS1	DENT REPAIR SHOP PER MAN	SV	GLG	AT1	2700	900	35	40	3
		VT	GPT	.	9-0	3-0	40		60
DNSA1	DENTAL SUPPORT SUBSTERILE	SV	GLG	AT1	2600	900	35	40	3
		VT	GPT	.	8-6	3-0	40		60
DNSA2	DENTAL SUPPORT PROSTHETIC	SV	GLG	AT1	2600	900	35	40	3
		VT	GPT	.	8-6	3-0	40		60
DNSB1	DENTAL SUPPORT ORTHODONTICS	SV	GLG	AT1	2600	900	35	40	3
		VT	GPT	.	8-6	3-0	40		60
DNSC1	DENTAL, STERILIZATION, SMALL	SV	GLG	AT2	2600	900	30	40	3
		ET	..	.	8-6	3-0	35		60
DNSC2	DENTAL, STERILIZATION, MEDIUM	SV	GLG	AT2	2600	900	30	40	3
		ET	..	.	8-6	3-0	35		60
DNSC3	DENTAL, STERILIZATION, LARGE	SV	GLG	AT2	2600	900	30	40	3
		ET	..	.	8-6	3-0	35		60
DNSP1	DENTAL SELF PREP AREA	SV	GLG	AT1	2600	900	30	40	3
		.	GPT	.	8-6	3-0	35		60
DNSS1	DENTAL SUPPORT SUBSTERILE	SV	GLG	AT1	2600	900	30	40	3
		VT	..	.	8-6	3-0	35		60
DNTB1	DENTAL TREATMENT RM, ORTHODONTICS	SV	GLG	AT1	2600	900	30	40	3
		.	..	.	8-6	3-0	35		60
DNTC1	DENTAL TREATMENT RM, COMPREHENSIVE	SV	GLG	AT1	2600	900	30	40	3
		.	..	.	8-6	3-0	35		60
DNTE1	DENTAL TREATMENT RM, ENDODONTICS	SV	GLG	AT1	2600	900	30	40	3
		.	GPT	.	8-6	3-0	35		60
DNTG1	DENTAL TREATMENT RM, GENERAL	SV	GLG	AT1	2600	900	30	40	3
		.	GPT	.	8-6	3-0	35		60
DNTG2	DENTAL TREATMENT RM, ORAL HYGIENE	SV	GLG	AT1	2600	900	30	40	3
		.	GPT	.	8-6	3-0	35		60
DNTG3	DENTAL TREATMENT RM, PATHOLOGY	SV	GLG	AT1	2600	900	30	40	3
		.	GPT	.	8-6	3-0	35		60

APPENDIX A
ARCHITECTURAL AND ENGINEERING DESIGN REQUIREMENTS

ROOM CODE	ELECTRICAL LIGHT LEV	N	EM PWR PWR	LT	N	MEDICAL GASES M C A	D C A	L A	P A	M V	D H V	D L V	L D E	O X	N O	N I	N	HVAC BL	AC	OA	TEMP SM	WN	R H	FL IN	FN	E X	N
DNPL1	700	.	.	.	.	.	1	1	1	.	.	.	1	.	.	.	B	-	10	2.5	26	20	.	80	.	Y	M
	.	.			.												.				78	68					.
DNRS1	700	.	.	.	.	.	1	1	1	.	.	1	1	.	.	.	B	-	10	2.5	26	20	.	80	.	Y	M
	.	.			.												.				78	68					.
DNSA1	500	.	.	.	.	.	1	2	.	.	.	1	1	.	.	.	B	0	6	2	26	20	.	80	.	.	.
	.	.			.												.				78	68					.
DNSA2	500	.	.	.	.	.	1	2	.	.	.	1	1	.	.	.	B	0	6	2	26	20	.	.	.	.	.
	.	.			.												.				78	68					.
DNSB1	500	.	.	.	.	.	1	2	.	.	.	1	1	.	.	.	B	0	6	2	26	20	.	.	.	.	.
	.	.			.												.				78	68					.
DNSC1	700	.	.	.	U	.	2	.	.	.	.	2	.	.	.	.	B	+	6	2	24	20	.	80	.	.	.
	.	.			.												.				75	68					.
DNSC2	700	.	.	.	U	.	2	.	.	.	.	2	.	.	.	.	B	+	6	2	24	20	.	80	.	.	.
	.	.			.												.				75	68					.
DNSC3	700	.	.	.	U	.	2	.	.	.	.	2	.	.	.	.	B	+	6	2	24	20	.	80	.	.	.
	.	.			.												.				75	68					.
DNSP1	500	.	.	.	.	.	.	.	.	.	.	.	.	.	.	.	.	0	6	2	26	20	.	.	.	.	.
	.	.			.												.				78	68					.
DNSS1	500	.	.	.	.	.	1	2	.	.	.	1	1	.	.	.	B	0	6	2	26	20	.	80	.	.	.
	.	.			.												.				78	68					.
DNTB1	1600	D	.	.	U	.	2	.	.	.	.	2	.	1	.	.	.	0	6	2	24	20	.	.	.	.	D
	.	F			.												.				75	68					.
DNTC1	1600	D	.	.	U	.	2	.	.	.	1	2	.	1	1	1	D	++	12	3	24	20	.	.	.	.	I
	.	F			.												N				75	68					.
DNTE1	1600	D	.	.	U	1	2	.	.	.	1	2	.	1	1	.	D	++	12	3	26	20	.	.	.	.	I
	.	F			.												.				78	68					.
DNTG1	1600	D	.	.	U	.	2	.	.	.	.	2	.	1	.	.	.	0	6	2	24	20	.	.	.	.	D
	.	F			.												.				75	68					.
DNTG2	1600	D	.	.	U	.	2	.	.	.	.	2	.	1	.	.	.	0	6	2	24	20	.	.	.	.	D
	.	F			.												.				75	68					.
DNTG3	1600	D	.	.	U	.	2	.	.	.	.	2	.	1	.	.	.	0	6	2	24	20	.	.	.	.	D
	.	F			.												.				75	68					.

APPENDIX A
ARCHITECTURAL AND ENGINEERING DESIGN REQUIREMENTS

ROOM CODE	ROOM NAME	ARCHITECTURAL MATRL+FIN FL	WAL	CLG	CLG HT	DOOR SIZE	NOISE RM	SC	STRU FLR LOAD
DNTP1	DENTAL TREATMENT RM, PROSTHODONTICS	SV	GLG	AT1	2600	900	30	40	3
					8-6	3-0	35		60
DNTP2	DENTAL TREATMENT RM, PERIODONTICS	SV	GLG	AT1	2600	900	30	40	3
		.	..	.	8-6	3-0	35		60
DNTP3	DENTAL TREATMENT RM, PEDIATRICS	SV	GLG	AT1	2600	900	30	40	3
		.	..	.	8-6	3-0	35		60
DNTS1	DENTAL TREATMENT RM, ORAL SURGERY	SV	GLG	GLG	2600	900	30	40	3
		.	..	.	8-6	3-0	35		60
DNTS2	DENT TREATMENT ORAL SURGERY SUPPORT	SV	GLG	AT1	2600	900	30	40	3
		.	..	.	8-6	3-0	35		60
DNTT1	DENTAL TREATMENT RM, TRAINING	SV	GLG	AT1	2600	900	30	40	3
		.	..	.	8-6	3-0	35		60
DNTXX	DENTAL RECOVERY	SV	GLG	AT1	2600	900	30	40	3
		.	..	.	8-6	3-0	35		60
DNWA1	DENTAL WORK AREA CLINICAL	SV	GLG	AT1	2600	900	30	40	3
		.	..	.	8-6	3-0	35		60
DNXC1	DENT XRAY CEPHALOMETRICS	VT	GLG	AT1	2600	900	30	40	3
		SV	GPT	.	8-6	3-0	35		60
DNXD1	DENT XRAY DUAL(INTRA/PANO)	VT	GLG	AT1	2600	900	30	40	3
		SV	GPT	.	8-6	3-0	35		60
DNXF1	DENT XRAY FILM PROCESSING AUTO 1 PR	SV	GLG	AT1	2400	SP	30	40	3
		VT	GPT	.	8-0		35		60
DNXF2	DENT XRAY FILM PROCESSING AUTO 2 PR	SV	GLG	AT1	2400	900	30	40	3
		VT	GPT	.	8-0	3-0	35		60
DNXI1	DENT XRAY INTRAORAL	SV	GLG	AT1	2600	900	30	40	3
		.	GPT	.	8-6	3-0	35		60
DNXR1	DENT XRAY VIEWING	SV	GLG	AT1	2400	900	30	40	3
		.	CPT	.	8-0	3-0	35		60
DOCK1	LOADING DOCK	CS	SSP	SSP	VAR	I	.	.	10
		.	..	.	VAR	.	.		200
DR001	DRESSING ROOM/CUBICLE	VT	GPT	AT1	2400	900	25	40	3
		CP	..	.	8-0	3-0	30		60

APPENDIX A
ARCHITECTURAL AND ENGINEERING DESIGN REQUIREMENTS

ROOM CODE	ELECTRICAL LIGHT LEV	N	EM PWR PWR	LT	N	MEDICAL GASES MC A	DCA A	LA A	PA A	MV V	DHV V	DLV V	LDE E	OX X	NO O	NI I	N	HVAC BL	AC	OA	TEMP SM	WN	RH	FL IN	FN	EX	N
DNTP1	1600	D	.	.	U	.	2	1	.	.	.	2	.	1	.	.	L	0	6	2	24	20	.	.	.	.	D
.	.	F			.												.				75	68					.
DNTP2	1600	D	.	.	U	.	2	.	.	.	1	2	.	1	1	.	D	++	12	3	20	24	.	90	.	.	I
.	.	F			.												.				68	75					.
DNTP3	1600	D	.	.	U	.	2	.	.	.	1	2	.	1	1	.	D	++	12	3	24	20	.	.	.	.	I
.	.	F			.												.				75	68					.
DNTS1	2100	D	.	.	U	.	2	.	.	.	1	2	.	1	1	1	N	++	12	3	20	26	.	90	.	.	I
.	.	F			.												D				68	78					.
DNTS2	700	.	.	.	U	.	.	.	.	.	.	.	.	.	.	.	.	0	6	2	24	20	.	90	.	.	D
.	.	.			.												.				75	68					.
DNTT1	1600	D	.	.	U	.	2	1	.	.	1	2	1	1	1	1	D	++	12	3	24	20	.	.	.	.	I
.	.	F			.												L				75	68					.
DNTXX	300	B	.	.	U	.	1	.	.	.	1	.	.	1	.	.	.	+	6	2	24	20	.	.	.	.	.
.	.	.			.												.				75	68					.
DNWA1	700	.	.	.	.	.	1	1	1	.	.	1	1	.	.	.	B	0	6	2	24	20	.	.	.	.	.
.	.	.			.												.				75	68					.
DNXC1	100	A	.	.	.	.	.	.	.	.	.	.	.	.	.	.	.	+	6	2	24	20	.	.	.	.	.
.	.	.			.												.				75	68					.
DNXD1	100	A	.	.	.	.	.	.	.	.	.	.	.	.	.	.	.	+	6	2	24	20	.	.	.	.	.
.	.	.			.												.				75	68					.
DNXF1	200	G	.	.	.	.	.	.	.	.	.	.	.	.	.	.	.	-	10	2.5	24	20	.	.	.	Y	.
.	.	.			.												.				75	68					.
DNXF2	200	G	.	.	.	.	.	.	.	.	.	.	.	.	.	.	.	-	10	2.5	24	20	.	.	.	Y	.
.	.	.			.												.				75	68					.
DNXI1	100	A	.	.	.	.	.	.	.	.	.	.	.	.	.	.	.	+	6	2	24	20	.	.	.	.	.
.	.	.			.												.				75	68					.
DNXR1	300	.	.	.	.	.	.	.	.	.	.	.	.	.	.	.	.	+	6	2	24	20	.	.	.	.	.
.	.	.			.												.				75	68					.
DOCK1	200	.	.	.	.	.	.	.	.	.	.	.	.	.	.	.	.	.	.	.	.	.	.	.	.	.	.
.	.	.			.												.				.	.					.
DR001	100	.	.	.	.	.	.	.	.	.	.	.	.	.	.	.	.	0	4	2	26	20	.	.	.	.	.
.	.	.			.												.				78	68					.

APPENDIX A
ARCHITECTURAL AND ENGINEERING DESIGN REQUIREMENTS

ROOM CODE	ROOM NAME	ARCHITECTURAL MATRL+FIN FL	WAL	CLG	CLG HT	DOOR SIZE	NOISE RM	SC	STRU FLR LOAD
DR002	DRESSING ROOM W/LOCKER	VT	GPT	AT1	2400	900	25	40	3
		CP	..	.	8-0	3-0	30		60
DUTY1	DUTY ROOM, ONE OCCUPANT	CP	GPT	AT1	2400	900	25	40	3
		.	..	.	8-10	3-0	30		60
DUTY2	DUTY ROOM, TWO OCCUPANTS	CP	GPT	AT1	2400	900	25	40	3
		.	..	.	8-10	5-0	30		60
EVAC1	EVACUATION STAGING BED	VT	GPT	AT1	2600	1200	35	40	3
		.	..	.	8-6	4-0	40		60
EVPR1	EVOKED POTENTIAL RESPONSE ROOM	VT	GPT	AT1	2400	900	30	35	5
		.	..	.	8-0	3-0	35		100
EXEN1	EXAMINATION ROOM, ENT	VT	GPT	AT1	2400	900	30	40	3
		.	..	.	8-0	3-0	35		60
EXOA1	EXAM/OFFICE, AUDIOLOGIST	VT	GAF	AT1	2400	900	25	50	3
		CP	..	.	8-0	3-0	30		60
EXOS1	EXAM/OFFICE, SPEECH THERAPIST	VT	GAF	AT1	2400	900	25	50	3
		CP	..	.	8-0	3-0	30		60
EXPO1	EXAMINATION ROOM, PODIATRY	SV	GPT	AT1	2400	900	30	40	3
		VT	..	.	8-0	3-0	35		60
EXPS1	EXAM/OFFICE, SPEECH THER	VT	GPT	AT1	2400	900	30	40	3
		CP	..	.	8-0	3-0	35		60
EXRG1	EXAMINATION ROOM, GENERAL USE	VT	GPT	AT1	2400	900	30	40	3
		.	..	.	8-0	3-0	35		60
EXRP1	EXAMINATION ROOM, PEDIATRICS	VT	GPT	AT1	2400	900	30	40	3
		.	..	.	8-0	3-0	35		60
EXUD1	EXAM, URODYNAMICS	VT	GLG	AT2	2400	900	30	40	3
		SV	..	.	8-0	3-0	35		60
EXVE1	EXAM, VESTIBULAR (EAR EXAM ROOM)	CP	GAF	AT1	2400	900	25	50	3
		.	..	.	8-0	3-0	30		60
EYCL1	EYE CONTACT LENS FITTING/DISPENSING	VT	GPT	AT1	2400	900	30	40	3
		.	..	.	8-0	3-0	35		60
EYEL1	EYE EXAM/EYE LANE	VT	GPT	AT1	2400	900	30	40	3
		.	..	.	8-0	3-0	35		60

APPENDIX A
ARCHITECTURAL AND ENGINEERING DESIGN REQUIREMENTS

ROOM CODE	ELECTRICAL LIGHT LEV	N	EM PWR PWR	LT	N	MEDICAL GASES MC	DCA	LA	PA	MV	DHV	DLV	LDE	OX	NO	NI	N	HVAC BL	AC	OA	TEMP SM	WN	RH	FL IN	FN	EX	N
DR002	200	.	.	LE	.	.	.	.	.	.	.	.	.	.	.	.	.	0	4	2	26	20	.	.	.	.	.
	.	.			.												.				78	68					.
DUTY1	300	.	.	.	.	.	.	.	.	.	.	.	.	.	.	.	.	0	6	2	26	20	.	.	.	.	.
	.	.			.												.				78	68					.
DUTY2	300	.	.	.	.	.	.	.	.	.	.	.	.	.	.	.	.	0	6	2	26	20	.	.	.	.	.
	.	.			.												.				78	68					.
EVAC1	500	C	.	LS	.	1	.	.	.	1	.	.	.	1	.	.	A	0	4	2	26	20	.	90	.	.	.
	.	.			.												.				78	68					.
EVPR1	300	A	.	.	.	1	.	.	.	1	.	.	.	.	.	.	.	0	4	2	26	20	.	.	.	.	.
	.	C			.												.				78	68					.
EXEN1	500	C	.	.	.	.	.	.	.	1	.	.	.	1	.	.	.	0	4	2	26	20	.	90	.	.	.
	.	.			.												.				78	68					.
EXOA1	500	C	.	.	.	.	.	.	.	.	.	.	.	.	.	.	.	0	4	2	26	20	.	90		.	.
	.	.			.												.				78	68					.
EXOS1	500	C	.	.	.	.	.	.	.	.	.	.	.	.	.	.	.	0	4	2	26	20	.	90	.	.	.
	.	.			.												.				78	68					.
EXPO1	500	C	.	.	.	1	.	.	1	1	.	.	.	1	.	1	B	0	4	2	26	20	.	90	.	.	.
	.	.			.												.				78	68					.
EXPS1	500	C	.	.	.	.	.	.	.	.	.	.	.	.	.	.	.	0	4	2	26	20	.	90	.	.	.
	.	.			.												.				78	68					.
EXRG1	500	C	.	.	.	.	.	.	.	.	.	.	.	.	.	.	.	0	4	2	26	20	.	90	.	.	.
	.	.			.												.				78	68					.
EXRP1	500	C	.	.	.	.	.	.	.	.	.	.	.	.	.	.	.	0	4	2	26	20	.	90	.	.	.
	.	.			.												.				78	68					.
EXUD1	500	C	.	.	.	.	.	.	.	.	.	.	.	.	.	.	.	0	4	2	26	20	.	90	.	.	.
	.	.			.												.				78	68					.
EXVE1	500	C	.	.	.	.	.	.	.	.	.	.	.	.	.	.	.	0	4	2	26	20	.	90	.	.	.
	.	.			.												.				78	68					.
EYCL1	500	C	.	.	.	.	.	.	.	.	.	.	.	.	.	.	.	0	4	2	26	20	.	90	.	.	.
	.	.			.												.				78	68					.
EYEL1	200	A	.	.	.	.	.	.	.	.	.	.	.	.	.	.	.	0	4	2	26	20	.	90	.	.	.
	.	C			.												.				78	68					.

APPENDIX A
ARCHITECTURAL AND ENGINEERING DESIGN REQUIREMENTS

ROOM CODE	ROOM NAME	ARCHITECTURAL MATRL+FIN FL	WAL	CLG	CLG HT	DOOR SIZE	NOISE RM	SC	STRU FLR LOAD
EYEL2	EXAM/OFFICE - EYE LANE	VT	GPT	AT1	2400	900	30	40	3
		.	..	.	8-0	3-0	35		60
EYER1	EYE ELECTRORETINOGRAPHY ROOM	VT	GPT	AT1	2400	900	30	40	3
		.	..	.	8-0	3-0	35		60
EYFC1	EYE FUNDUS CAMERA ROOM	VT	GPT	AT1	2400	900	30	40	3
		.	..	.	8-0	3-0	35		60
EYFD1	EYE FITTING AND DISPENSING	VT	GPT	AT1	2400	900	30	40	3
		.	..	.	8-0	3-0	35		60
EYOT1	EYE OPHTHALMIC TONOGRAPHY ROOM	VT	GPT	AT1	2400	900	30	40	3
		.	..	.	8-0	3-0	35		60
EYPL1	EYE PROSTHETICS LAB/EYE BANK	VT	GPT	AT1	2400	900	30	40	3
		.	..	.	8-0	3-0	35		60
EYVF1	EYE VISUAL FIELD/PERIMETRY ROOM	VT	GPT	AT1	2400	900	30	40	3
		.	..	.	8-0	3-0	35		60
EYVF2	EYE VISUAL FIELD/PERIMETRY - AUTO	VT	BPT	AT1	2400	900	30	40	3
		.	..	.	8-0	3-0	35		60
EYVT1	EYE VISUAL TRAINING AREA	VT	GPT	AT1	2400	900	30	40	3
		.	..	.	8-0	3-0	35		60
FILE1	FILE ROOM, GENERAL USE	VT	GPT	AT1	2400	900	35	40	7.5
		.	..	.	8-0	3-0	40		150
FSBR1	FOOD SERVICE, BAKE AND ROAST CENTER	QT	GLG	GLG	2700	900	35	50	B
		.	..	.	9-0	3-0	40		B
FSCD1	FOOD SERVICE, CAFETERIA DINING ROOM	CP	GVF	AT1	2700	B	35	50	5
		VT	GPT	.	9-0	.	40		100
FSCS1	FD SVC, CART STORAGE	QT	GLG	GLG	2700	900	.	40	5
		.	..	.	9-0	3-0	.		100
FSCS1	FOOD SERVICE, CART STORAGE	QT	GLG	GLG	2700	900	35	50	5
		.	..	.	9-0	3-0	40		100
FSCS2	FOOD SERVICE, CART STORAGE	QT	GLG	GLG	2700	900	35	50	5
		.	..	.	9-0	3-0	40		100
FSDA1	FOOD SERVICE, DESSERT ASSEMBLY	QT	GLG	GLG	2700	900	35	50	5
		.	..	.	9-0	3-0	40		100

APPENDIX A
ARCHITECTURAL AND ENGINEERING DESIGN REQUIREMENTS

ROOM CODE	ELECTRICAL LIGHT LEV	N	EM PWR PWR	LT	N	MEDICAL GASES M C A	D C A	L A	P A	M V	D H V	D L V	L D E	O X	N O	N I	N	HVAC BL	AC	OA	TEMP SM	WN	R H	FL IN	FN	E X	N
EYEL2	200	C	.	.	.	.	.	.	.	.	.	.	.	.	.	.	.	0	4	2	26	20	.	90	.	.	.
	500	F			.												.				78	68					.
EYER1	200	A	.	.	.	.	.	.	.	.	.	.	.	.	.	.	.	0	4	2	26	20	.	90	.	.	.
	.	C			.												.				78	68					.
EYFC1	200	A	.	.	.	1	.	.	.	1	.	.	.	1	.	.	.	0	4	2	26	20	.	90	.	.	.
	.	C			.												.				78	68					.
EYFD1	500	C	.	.	.	.	.	.	.	.	.	.	.	.	.	.	.	0	4	2	26	20	.	90	.	.	.
	.	.			.												.				78	68					.
EYOT1	500	C	.	.	.	.	.	.	.	.	.	.	.	.	.	.	.	0	4	2	26	20	.	90	.	.	.
	.	.			.												.				78	68					.
EYPL1	500	.	.	.	.	.	.	.	.	.	.	.	.	.	.	.	.	0	4	2	26	20	.	90	.	.	.
	1100	.			.												.				78	68					.
EYVF1	200	A	.	.	.	.	.	.	.	.	.	.	.	.	.	.	.	0	4	2	26	20	.	90	.	.	.
	.	C			.												.				78	68					.
EYVF2	200	A	.	.	.	.	.	.	.	.	.	.	.	.	.	.	.	0	4	2	26	20	.	90	.	.	.
	.	C			.												.				78	68					.
EYVT1	200	C	.	.	.	.	.	.	.	.	.	.	.	.	.	.	.	0	4	2	26	20	.	.	.	.	.
	500	.			.												.				78	68					.
FILE1	150	.	.	.	.	.	.	.	.	.	.	.	.	.	.	.	.	0	4	2	26	20	.	.	.	.	.
	.	.			.												.				78	68					.
FSBR1	700	.	.	.	U	.	.	.	.	.	.	.	.	.	.	.	.	0	10	2	26	20	.	.	.	Y	M
	.	.			.												.				78	68					.
FSCD1	200	C	.	LE	U	.	.	.	.	.	.	.	.	.	.	.	.	0	12	2	26	20	.	.	.	.	.
	.	.			.												.				78	68					.
FSCS1	50	.	.	.	U	.	.	.	.	.	.	.	.	.	.	.	.	0	4	2	26	20	.	.	.	.	.
	.	.			.												.				78	68					.
FSCS1	50	.	.	.	U	.	.	.	.	.	.	.	.	.	.	.	.	0	4	2	26	20	.	.	.	.	.
	.	.			.												.				78	68					.
FSCS2	50	.	.	.	U	.	.	.	.	.	.	.	.	.	.	.	.	0	4	2	26	20	.	.	.	.	.
	.	.			.												.				78	68					.
FSDA1	700	.	.	.	U	.	.	.	.	.	.	.	.	.	.	.	.	0	10	2	26	20	.	80	.	.	.
	.	.			.												.				78	68					.

APPENDIX A
ARCHITECTURAL AND ENGINEERING DESIGN REQUIREMENTS

ROOM CODE	ROOM NAME	ARCHITECTURAL MATRL+FIN FL	WAL	CLG	CLG HT	DOOR SIZE	NOISE RM	SC	STRU FLR LOAD
FSDS1	FOOD SERVICE, DISH STORAGE AREA	QT	GLG	GLG	2700	900	.	40	10
		.	..	.	9-0	3-0	.		200
FSDW1	FOOD SERVICE, DISH WASHING	QT	GLG	GLG	2700	900	35	50	B
		.	..	.	9-0	3-0	40		B
FSDW2	FOOD SERVICE DISH WASH SMALL FACILI	QT	GLG	GLG	2700	900	35	50	B
		.	..	.	9-0	3-0	40		B
FSDW3	FOOD SERVICE DISH WASH DETERGNT DSP	QT	GLG	GLG	2700	900	35	50	B
		.	..	.	9-0	3-0	40		B
FSFC1	FOOD SERVICE, FRY CENTER	QT	GLG	GLG	2700	900	35	50	B
		.	..	.	9-0	3-0	40		B
FSFV1	FOOD SERVICE, FRESH FRUIT/VEGETABLE	QT	GLG	GLG	2700	900	35	50	5
		.	..	.	9-0	3-0	40		100
FSGB1	FOOD SERVICE, GRILL AND BROIL AREA	QT	GLG	GLG	2700	900	35	50	B
		.	..	.	9-0	3-0	40		B
FSIR1	FOOD SERVICE, INGREDIENT ROOM	QT	GLG	GLG	2700	900	.	40	7.5
		.	..	.	9-0	3-0	.		150
FSMC1	FOOD SERVICE, MIXING CENTER	QT	GLG	GLG	2700	900	35	50	B
		.	..	.	9-0	3-0	40		B
FSMP1	FOOD SERVICE, MEAT PROCESSING	QT	GLG	GLG	2700	900	35	50	B
		.	..	.	9-0	3-0	40		B
FSNP1	FOOD SERVICE, NOURISHMENT PREP AREA	QT	GLG	GLG	2700	900	35	50	B
		.	..	.	9-0	3-0	40		B
FSPP1	FOOD SERVICE, PASTRY PREPARATION	QT	GLG	GLG	2700	900	35	50	7.5
		.	..	.	9-0	3-0	40		150
FSPT1	FOOD SERVICE, PATIENT TRAY LINE	QT	GLG	GLG	2700	900	35	50	5
		.	..	.	9-0	3-0	40		100
FSPT2	FOOD SERVICE, PATIENT TRAY CAROUSEL	QT	GLG	GLG	2700	900	35	50	5
		.	..	.	9-0	3-0	40		100
FSPW1	FOOD SERVICE, POT WASHING	QT	GLG	GLG	2700	900	35	50	B
		.	..	.	9-0	3-0	40		B
FSSA1	FOOD SERVICE, SALAD ASSEMBLY	QT	GLG	GLG	2700	900	35	50	5
		.	..	.	9-0	3-0	40		100

APPENDIX A
ARCHITECTURAL AND ENGINEERING DESIGN REQUIREMENTS

ROOM CODE	ELECTRICAL LIGHT LEV	N	EM PWR PWR	LT	N	MEDICAL GASES MCA	DCA	LA	PA	MV	DHV	DLV	LDE	OX	NO	NI	N	HVAC BL	AC	OA	TEMP SM	WN	RH	FL IN	FN	EX	N
FSDS1	50	.	.	.	U	.	.	.	.	.	.	.	.	.	.	.	.	0	4	2	26	20	.	.	.	.	.
	.	.			.												.				78	68					.
FSDW1	500	.	.	.	U	.	.	.	.	.	.	.	.	.	.	.	.	-	10	2	26	20	.	.	.	Y	M
	.	.			.												.				78	68					.
FSDW2	500	.	.	.	U	.	.	.	.	.	.	.	.	.	.	.	.	-	10	2	26	20	.	.	.	Y	M
	.	.			.												.				78	68					.
FSDW3	500	.	.	.	U	.	.	.	.	.	.	.	.	.	.	.	.	-	10	2	26	20	.	.	.	Y	M
	.	.			.												.				78	68					.
FSFC1	700	.	.	.	U	.	.	.	.	.	.	.	.	.	.	.	.	-	10	2	26	20	.	80	.	Y	M
	.	.			.												.				78	68					.
FSFV1	700	.	.	.	U	.	.	.	.	.	.	.	.	.	.	.	.	0	10	2	26	20	.	80	.	.	.
	.	.			.												.				78	68					.
FSGB1	700	.	.	.	U	.	.	.	.	.	.	.	.	.	.	.	.	-	10	2	26	20	.	.	.	Y	M
	.	.			.												.				78	68					.
FSIR1	150	.	.	.	U	.	.	.	.	.	.	.	.	.	.	.	.	0	10	2	26	20	.	80	.	.	.
	.	.			.												.				78	68					.
FSMC1	700	.	.	.	U	.	.	.	.	.	.	.	.	.	.	.	.	0	10	2	26	20	.	80	.	.	.
	.	.			.												.				78	68					.
FSMP1	700	.	.	.	U	.	.	.	.	.	.	.	.	.	.	.	.	0	10	2	26	20	.	80	.	.	.
	.	.			.												.				78	68					.
FSNP1	500	.	.	.	U	.	.	.	.	.	.	.	.	.	.	.	.	0	10	2	26	20	.	80	.	.	.
	.	.			.												.				78	68					.
FSPP1	700	.	.	.	U	.	.	.	.	.	.	.	.	.	.	.	.	0	10	2	26	20	.	80	.	.	.
	.	.			.												.				78	68					.
FSPT1	700	.	.	.	U	.	.	.	.	.	.	.	.	.	.	.	.	0	4	2	26	20	.	80	.	.	.
	.	.			.												.				78	68					.
FSPT2	150	.	.	.	U	.	.	.	.	.	.	.	.	.	.	.	.	-	10	2	26	20	.	.	.	Y	.
	.	.			.												.				78	68					.
FSPW1	300	.	.	.	U	.	.	.	.	.	.	.	.	.	.	.	.	-	10	2	26	20	.	.	.	Y	M
	.	.			.												.				78	68					.
FSSA1	700	.	.	.	U	.	.	.	.	.	.	.	.	.	.	.	.	0	10	2	26	20	.	80	.	.	.
	.	.			.												.				78	68					.

APPENDIX A
ARCHITECTURAL AND ENGINEERING DESIGN REQUIREMENTS

ROOM CODE	ROOM NAME	ARCHITECTURAL MATRL+FIN FL	WAL	CLG	CLG HT	DOOR SIZE	NOISE RM	SC	STRU FLR LOAD
FSSC1	FOOD SERVICE, STEAM CENTER	QT	GLG	GLG	2700	900	35	50	7.5
		.	..	.	9-0	3-0	40		150
FSSL1	FOOD SERVICE, CAFETERIA SERVING	QT	GLG	GLG	2700	900	35	50	7.5
		.	..	.	9-0	3-0	40		150
FSTD1	FOOD SERVICE, THERAPEUTIC DIET PREP	QT	GLG	GLG	2700	900	35	50	7.5
		.	..	.	9-0	3-0	40		150
FSWS1	FOOD SERVICE, WEIGHT SCREENING/WAIT	VT	GPT	AT1	2400	900	30	40	5
		.	..	.	8-0	3-0	35		100
HAFR1	HEARING AID FITTING ROOM	CP	GAF	AT1	2700	900	20	40	3
		.	..	.	9-0	3-0	25		60
HATL1	HEARING AID TESTING LAB/SHOP	VT	GPT	AT1	2700	900	30	40	3
		.	..	.	9-	3-0	35		60
ICE01	ICE MACHINE ADD-IN	SV	GLG	AT1	2400	OPEN	35	40	B
		VT	GPT	.	8-0	OPEN	40		B
JANC1	JANITORS' CLOSET	SV	GLG	GLG	2400	900	40	40	5
		VT	..	.	8-0	3-0	45		100
LBAP1	LAB ALLERGEN PREPARATION	SV	GLG	AT2	2400	900	30	40	5
		.	..	.	8-0	3-0	35		100
LBAR1	LAB AUTOPSY ROOM	ET	GLG	GLG	2700	1200	35	40	3
		CT	..	.	9-0	4-0	40		60
LBAR2	LAB AUTOPSY TEACHING ROOM	ET	GLG	AT2	2700	900	30	40	5
		CT	..	.	9-0	3-0	35		100
LBAR3	LAB AUTOPSY CLEAN UP ROOM	ET	GLG	GLG	2700	900	30	40	5
		CT	..	.	9-0	3-0	35		100
LBBD1	LAB BLOOD DONOR STATION	SV	GLG	AT2	2600	1200	35	40	3
		.	..	.	8-6	4-0	40		60
LBBD2	LAB BLOOD DONOR PHORESIS STATION	SV	GLG	AT2	2700	900	30	40	5
		.	..	.	9-0	3-0	35		100
LBBD3	LAB BONE DISSECTION (ENT)	SV	GLG	AT2	2700	900	30	50	5
		.	..	.	9-0	3-0	35		100
LBBG1	LAB BLOOD GAS CLINIC	SV	GLG	AT2	2700	900	30	40	5
		.	..	.	9-0	3-0	35		100

APPENDIX A
ARCHITECTURAL AND ENGINEERING DESIGN REQUIREMENTS

ROOM CODE	ELECTRICAL LIGHT LEV	N	EM PWR PWR	LT	N	MEDICAL GASES M C A	D C A	L A	P A	M V	D H V	D L V	L D E	O X	N O	N I	N	HVAC BL	AC	OA	TEMP SM	WN	R H	FL IN	FN	E X	N
FSSC1	500	.	.	.	U	.	.	.	.	.	.	.	.	.	.	.	.	-	10	2	26	20	.	.	.	Y	M
	.	.			.												.				78	68					.
FSSL1	500	.	.	.	U	.	.	.	.	.	.	.	.	.	.	.	.	0	12	2	26	20	.	.	.	Y	.
	.	.			.												.				78	68					.
FSTD1	500	.	.	.	U	.	.	.	.	.	.	.	.	.	.	.	.	0	10	2	26	20	.	.	.	Y	.
	.	.			.												.				78	68					.
FSWS1	300	.	.	.	U	.	.	.	.	.	.	.	.	.	.	.	.	0	10	2	26	20	.	80	.	.	.
	.	.			.												.				78	68					.
HAFR1	500	.	.	.	U	.	.	.	.	.	.	.	.	.	.	.	.	0	4	1	26	20	.	.	.	.	.
	.	.			.												.				78	68					.
HATL1	700	.	.	.	U	.	.	.	.	.	.	.	.	.	.	.	.	0	4	1	26	20	.	.	.	.	.
	.	.			.												.				78	68					.
ICE01	150	.	.	LS	E	.	.	.	.	.	.	.	.	.	.	.	.	0	6	1.5	26	20	.	.	.	Y	.
	.	.			.												.				78	68					.
JANC1	50	.	.	.	.	.	.	.	.	.	.	.	.	.	.	.	.	-	10	.	.	.	.	.	.	Y	.
	.	.			.												.				.	.					.
LBAP1	500	C	.	.	.	.	.	.	.	.	.	.	.	.	.	.	.	+	6	2	26	20	.	90	90	.	M
	.	.			.												.				78	68					.
LBAR1	700	D	.	.	.	.	.	.	.	2	.	.	.	.	.	.	B	-	12	3	26	20	.	80	.	Y	M
	1600	F			.												.				78	68					.
LBAR2	700	D	.	.	.	.	.	.	.	2	.	.	.	.	.	.	B	-	12	3	26	20	.	80	.	Y	M
	1600	F			.												.				78	68					.
LBAR3	700	.	.	LE	.	.	.	.	.	2	.	.	.	.	.	.	B	-	12	3	26	20	.	80	.	Y	M
	.	.			.												.				78	68					.
LBBD1	500	C	.	LS	.	.	.	.	.	1	.	.	.	1	.	.	B	0	4	2	26	20	.	80	.	.	.
	.	.			.												.				78	68					.
LBBD2	500	C	R	L	.	.	.	.	.	1	.	.	.	.	.	.	B	0	6	2	26	20	.	80	.	Y	.
	.	.			.												.				78	68					.
LBBD3	500	C	.	.	.	.	.	1	.	1	.	.	.	.	.	.	B	0	6	2	26	20	.	80	.	Y	.
	1100	.			.												.				78	68					.
LBBG1	500	C	R	L	.	1	.	.	1	1	.	.	.	.	.	.	B	0	6	2	26	20	.	80	.	Y	.
	1100	.			.												.				78	68					.

APPENDIX A
ARCHITECTURAL AND ENGINEERING DESIGN REQUIREMENTS

ROOM CODE	ROOM NAME	ARCHITECTURAL MATRL+FIN FL	WAL	CLG	CLG HT	DOOR SIZE	NOISE RM	SC	STRU FLR LOAD
LBBG2	LAB BLOOD GAS & ELECTROLYTES	SV	GLG	AT2	2700	900	30	40	5
		.	..	.	9-0	3-0	35		100
LBBG3	LAB BLOOD GAS MICROVOLUME - INFANT	SV	GLG	AT2	2700	900	30	40	5
		.	..	.	9-0	3-0	35		100
LBBP1	LAB BODY PREP ROOM	QT	GLG	GLG	2700	900	35	40	5
		.	..	.	9-0	3-0	40		100
LBBS1	LAB BLOOD SHIPPING - BASIC	SV	GLG	AT2	2700	900	35	40	5
		.	..	.	9-0	3-0	40		100
LBBS2	LAB BLOOD SHIPPING - FROZEN BLOOD	SV	GLG	AT2	2700	900	30	40	5
		.	..	.	9-0	3-0	35		100
LBBV1	LAB BODY VIEWING ROOM	SV	GLG	AT2	2700	900	30	40	5
		.	..	.	9-0	3-0	35		100
LBC01	LAB COAGULATION	SV	GLG	AT2	2700	900	35	40	5
		.	..	.	9-0	3-0	40		100
LBCP1	LAB CYTOGENETICS PREPARATION	SV	GLG	AT2	2700	900	35	40	5
		.	..	.	9-0	3-0	40		100
LBCR1	LAB CYTOGENETICS READING ROOM	SV	GLG	AT2	2700	900	30	40	5
		.	..	.	9-0	3-0	35		100
LBCS1	LAB CADAVER STORAGE ROOM	SV	GLG	AT2	2700	900	.	40	5
		.	..	.	9-0	3-0	.		100
LBDE1	LAB DERMATOLOGY	SV	GLG	AT2	2700	900	30	40	5
		.	..	.	9-0	3-0	35		100
LBDR1	LAB DECONTAMINATION ROOM	SV	GLG	AT2	2700	900	35	40	5
		VT	..	.	9-0	3-0	40		100
LBDR2	LAB DECONTAMINATION RM - COMM HOSP	SV	GLG	AT2	2700	900	35	40	3
		VT	..	.	9-0	3-0	40		60
LBDR3	LAB DECONTAMINATION RM - MED CENTER	SV	GLG	AT2	2700	900	35	40	3
		.	..	.	9-0	3-0	40		60
LBDS1	LAB BONE DISSECTION (ENT USE)	SV	GLG	AT2	2700	900	35	40	5
		.	..	.	9-0	3-0	40		100
LBEM1	LAB ELECTRON MICRO' TEM SCOPE	SV	GLG	AT2	2700	900	30	40	5
		.	..	.	9-	3-0	35		100

APPENDIX A
ARCHITECTURAL AND ENGINEERING DESIGN REQUIREMENTS

ROOM CODE	ELECTRICAL LIGHT LEV	N	EM PWR PWR	LT	N	MEDICAL GASES MC A	DC A	LA	PA	MV	DHV	DLV	LDE	OX	NO	NI	N	HVAC BL	AC	OA	TEMP SM	WN	RH	FL IN	FN	EX	N
LBBG2	500	C	R	L	.	1	.	.	1	1	.	.	.	1	.	.	B	0	6	2	26	20	.	80	.	Y	.
	1100	.			.												.				78	68					.
LBBG3	500	C	R	L	.	1	.	.	1	1	.	.	.	1	.	.	B	0	6	2	26	20	.	80	.	Y	.
	1100	.			.												.				78	68					.
LBBP1	500	C	.	.	.	1	.	.	.	1	.	.	.	.	.	.	B	-	10	2	26	20	.	80	.	Y	M
	1100	.			.												.				78	68					.
LBBS1	500	C	.	LS	E	.	.	1	.	1	.	.	.	.	.	.	B	0	6	2	26	20	.	80	.	Y	.
	.	.			.												.				78	68					.
LBBS2	500	C	.	LS	E	.	.	1	.	1	.	.	.	.	.	.	B	0	6	2	26	20	.	80	.	.	.
	1100	.			.												.				78	68					.
LBBV1	300	.	.	.	.	.	.	.	.	.	.	.	.	.	.	.	.	-	12	3	26	20	.	80	.	Y	M
	.	.			.												.				78	68					.
LBC01	500	C	R	L	.	.	.	1	.	1	.	.	.	.	.	.	B	0	6	2	26	20	.	80	.	.	.
	1100	.			.												.				78	68					.
LBCP1	500	C	R	L	.	.	.	1	.	1	.	.	.	.	.	.	B	0	6	2	26	20	.	80	.	Y	M
	1100	.			.												.				78	68					.
LBCR1	500	A	R	L	.	.	.	.	.	.	.	.	.	.	.	.	.	0	6	2	26	20	.	80	.	Y	M
	.	C			.												.				78	68					.
LBCS1	150	.	.	LS	E	.	.	.	.	.	.	.	.	.	.	.	.	-	10	2	26	20	.	80	.	Y	.
	.	.			.												.				78	68					.
LBDE1	500	C	.	.	.	.	.	.	.	1	.	.	.	1	.	.	B	0	6	2	26	20	.	80	.	.	M
	1100	.			.												.				78	68					.
LBDR1	500	C	R	L	.	.	.	.	1	1	.	.	.	1	.	.	B	-	10	2	26	20	.	80	.	Y	M
	1100	.			.												.				78	68					.
LBDR2	500	C	R	L	.	.	.	.	1	1	.	.	.	1	.	.	B	-	10	2	26	20	.	80	.	Y	M
	1100	.			.												.				78	68					.
LBDR3	500	C	R	L	.	.	.	.	1	1	.	.	.	1	.	.	B	-	10	2	26	20	.	80	.	Y	M
	1100	.			.												.				78	68					.
LBDS1	500	C	.	.	U	.	.	1	.	1	.	.	.	.	.	.	B	-	6	2	26	20	.	80	.	Y	M
	1100	.			.												.				78	68					.
LBEM1	500	A	.	.	.	.	.	.	.	.	.	.	.	.	.	.	.	0	6	2	26	20	.	80	.	.	
	.	.			.												.				78	68					.

APPENDIX A
ARCHITECTURAL AND ENGINEERING DESIGN REQUIREMENTS

ROOM CODE	ROOM NAME	ARCHITECTURAL MATRL+FIN FL	WAL	CLG	CLG HT	DOOR SIZE	NOISE RM	SC	STRU FLR LOAD
LBEM2	LAB ELECTRON MICRO' SEM/TEM SCOPE	SV	GLG	AT2	2700	900	30	40	5
		.	..	.	9-0	3-0	35		100
LBEM3	LAB ELECTRON MICRO' SPECIMEN PREP	SV	GLG	AT2	2700	900	30	40	5
		.	..	.	9-0	3-0	35		100
LBEM4	LAB ELECTRON MICRO' SECTIONING RM	SV	GLG	AT2	2700	900	30	40	5
		.	..	.	9-0	3-0	35		100
LBEM5	LAB ELECTRON MICRO' EVAPORATION RM	SV	GLG	AT2	2700	900	30	40	5
		.	..	.	9-0	3-0	35		100
LBEM6	LAB ELECTRON MICRO' POSITIVE PROC.	SV	GLG	AT2	2700	900	30	40	5
		.	..	.	9-0	3-0	35		100
LBEM7	LAB ELECTRON MICRO' NEGATIVE PROC.	SV	GLG	AT2	2700	900	30	40	5
		.	..	.	9-0	3-0	35		100
LBEN1	LAB ENTOMOLOGY	SV	GLG	AT2	2700	900	35	40	5
		.	..	.	9-0	3-0	40		100
LBFC1	LAB FLOW CYTOMETER ROOM	SV	GLG	AT2	2700	900	30	40	5
		.	..	.	9-0	3-0	35		100
LBFM1	LAB FLUORESCENT MICROSCOPY	SV	GLG	AT2	2700	900	30	40	5
		.	..	.	9-0	3-0	35		100
LBFS1	LAB FROZEN SECTION	SV	GLG	AT2	2700	900	30	40	5
		.	..	.	9-0	3-0	35		100
LBGE1	LAB GASTROENTEROLOGY	SV	GLG	AT2	2700	900	30	40	5
		.	..	.	9-0	3-0	35		100
LBGW1	LAB GLASSWARE WASHING ROOM	SV	GLG	GLG	2700	900	35	40	5
		.	..	.	9-0	3-0	40		100
LBIH1	LAB INDUSTRIAL HYGIENE	SV	GLG	AT2	2700	900	35	40	5
		.	..	.	9-0	3-0	40		100
LBIR1	LAB INCUBATION ROOM WALK-IN	SV	GLG	GLG	2700	900	35	40	5
		.	..	.	9-0	3-0	40		100
LBMR1	LAB MORGUE REFRIGERATOR - FREE STND	SV	GLG	GLG	2700	1050	.	40	C
		.	..	.	9-0	3-6	.		C
LBMR2	LAB MORGUE REFRIGERATOR – WALK-IN	SV	GLG	GLG	2700	1050	35	40	C
		.	..	.	9-0	3-6	40		C

APPENDIX A
ARCHITECTURAL AND ENGINEERING DESIGN REQUIREMENTS

ROOM CODE	ELECTRICAL LIGHT LEV	N	EM PWR PWR	LT	N	MEDICAL GASES MCA	DCA	LAA	PAA	MAV	DHV	DLV	LDE	OXX	NOO	NIN	N	HVAC BL	AC	OA	TEMP SM	WN	RH	FL IN	FN	EX	N
LBEM2	500	A	R	L	.	.	.	.	.	.	.	.	.	.	.	.	.	0	6	2	26	20	.	80	.	.	.
	.	.			.												.				78	68					.
LBEM3	500	C	R	L	.	.	.	.	.	.	.	.	.	.	.	.	.	0	6	2	26	20	.	80	.	.	.
	1100	.			.												.				78	68					.
LBEM4	500	C	R	L	.	.	.	.	.	.	.	.	.	.	.	.	.	0	6	2	26	20	.	80	.	.	.
	1100	.			.												.				78	68					.
LBEM5	500	C	R	L	.	.	.	.	.	.	.	.	.	.	.	.	.	0	6	2	26	20	.	80	.	.	.
	.	.			.												.				78	68					.
LBEM6	500	C	R	L	.	.	.	.	.	.	.	.	.	.	.	.	.	0	6	2	26	20	.	80	.	.	.
	.	.			.												.				78	68					.
LBEM7	500	C	R	L	.	.	.	.	.	.	.	.	.	.	.	.	.	0	6	2	26	20	.	80	.		
	.	.			.												.				78	68					
LBEN1	500	C	R	L	.	.	.	1	.	1	.	.	.	.	.	.	B	-	6	2	26	20	.	80	.	Y	M
	1100	.			.												.				78	68					.
LBFC1	500	C	R	L	.	.	.	.	.	1	.	.	.	1	.	.	B	-	6	2	26	20	.	80	.	Y	M
	1100	.			.												.				78	68					.
LBFM1	500	C	R	L	.	.	.	1	.	1	.	.	.	.	.	.	B	0	6	2	26	20	.	80	.	.	.
	1100	.			.												.				78	68					.
LBFS1	200	C	.	LS	E	.	.	1	.	1	.	.	.	.	.	.	B	-	4	2	26	20	.	90	.	.	.
	.	.			.												.				78	68					.
LBGE1	500	C	R	L	.	1	.	.	.	1	.	.	.	.	.	.	B	-	6	2	26	20	.	80	.	Y	M
	1100	.			.												.				78	68					.
LBGW1	200	C	.	L	.	.	.	.	.	.	.	.	.	.	.	.	.	0	10	2.5	26	20	.	80	.	Y	M
	.	.			.												.				78	68					.
LBIH1	500	C	.	.	.	.	.	.	.	1	.	.	.	.	.	.	B	-	6	2	26	20	.	80	.	Y	M
	1100	.			.												.				78	68					.
LBIR1	500	C	.	LS	E	.	.	.	.	1	.	.	.	.	.	.	B	+	6	2	26	20	.	80	.	Y	M
	1100	.			.												.				78	68					.
LBMR1	150	.	.	LS	E	.	.	.	.	1	.	.	.	.	.	.	B	-	10	2	.	.	.	.	.	Y	.
	.	.			.												.				.	.					.
LBMR2	150	.	.	LS	E	.	.	.	.	1	.	.	.	.	.	.	B	-	10	2	.	.	.	.	.	Y	.
	.	.			.												.				.	.					.

APPENDIX A
ARCHITECTURAL AND ENGINEERING DESIGN REQUIREMENTS

ROOM CODE	ROOM NAME	ARCHITECTURAL MATRL+FIN FL	WAL	CLG	CLG HT	DOOR SIZE	NOISE RM	SC	STRU FLR LOAD
LBOB1	LAB OB/GYN CLINIC - SPECIMENS	SV	GLG	AT2	2700	900	30	40	5
		.	..	.	9-0	3-0	35		100
LBOH1	LAB ONCOLOGY/HEMATOLOGY	SV	GLG	AT2	2700	900	30	40	5
		.	..	.	9-0	3-0	35		100
LBRB1	LAB RESEARCH BIOCHEMISTRY	SV	GLG	AT2	2700	900	30	40	5
		.	..	.	9-0	3-0	35		100
LBRC1	LAB RESEARCH CLEAN	SV	GLG	AT2	2700	900	30	40	5
		.	..	.	9-0	3-0	35		100
LBRC2	LAB RESEARCH CONTAINMENT ROOM	SV	GLG	AT2	2700	900	30	40	3
		.	..	.	9-0	3-0	35		60
LBRH1	LAB RHEUMATOLOGY	SV	GLG	AT2	2700	900	30	40	5
		.	..	.	9-0	3-0	35		100
LBRH2	LAB RESEARCH HAZ STUDIES	SV	GLG	AT2	2700	900	30	40	5
		.	..	.	9-				
LBRI1	LAB RADIOIMMUNOASSAY	SV	GLG	AT2	2700	900	30	40	5
		.	..	.	9-0	3-0	35		100
LBRP1	LAB RADIATION PROTECTION	SV	GLG	AT2	2700	900	30	40	5
		.	..	.	9-0	3-0	35		100
LBRS1	LAB RESEARCH HAZARDOUS STUDIES	SV	GLG	AT2	2700	900	30	40	5
		.	..	.	9-0	3-0	35		100
LBSC1	LAB SMALL CLINIC - STANDARD	SV	GLG	AT2	2400	900	30	40	5
		VT	..	.	8-0	3-0	35		100
LBSM1	LAB SOLUTION & MEDIA PREP	SV	GLG	AT2	2700	900	30	40	5
		.	..	.	9-0	3-0	35		100
LBSP1	LAB SPECIMEN COLLECTION STATION	SV	GLG	AT2	2400	900	30	40	5
		.	..	.	8-0	3-0	35		100
LBSS1	LAB SPECIMEN SHIPPING AREA	SV	GLG	AT2	2400	900	30	40	5
		.	..	.	8-0	3-0	35		100
LBTS1	LAB TISSUE STORAGE AREA	SV	GLG	AT2	2700	900	30	40	5
		.	..	.	9-0	3-0	35		100
LBTS2	LAB TISSUE STORAGE REFRIGERATED	PB	SPF	SPF	2700	900	.	.	C
		.	..	.	9-0	3-0	.		C

APPENDIX A
ARCHITECTURAL AND ENGINEERING DESIGN REQUIREMENTS

ROOM CODE	ELECTRICAL LIGHT LEV	N	EM PWR PWR	LT	N	MEDICAL GASES MC	DCA	LA	PA	MV	DHV	DLV	LDE	OX	NO	NI	N	HVAC BL	AC	OA	TEMP SM	WN	RH	FL IN	FN	EX	N
LBOB1	500	C	R	L	.	.	.	.	.	1	.	.	.	.	.	.	B	0	6	2	26	20	.	80	.	Y	M
	1100	.			.												.				78	68					.
LBOH1	500	C	R	L	.	.	.	1	.	1	.	.	.	.	.	.	B	-	6	2	26	20	.	80	.	Y	M
	1100	.			.												.				78	68					.
LBRB1	500	C	.	LS	E	.	.	1	.	1	.	.	.	.	.	.	B	-	6	2	26	20	.	80	.	Y	M
	1100	.			.												.				78	68					.
LBRC1	500	C	.	LS	E	.	.	1	.	1	.	.	.	.	.	.	B	+	6	2	26	20	.	80	.	.	M
	1100	.			.												.				78	68					.
LBRC2	500	C	.	LS	E	.	.	1	.	1	.	.	.	.	.	.	B	-	6	2	26	20	.	80	.	Y	M
	1100	.			.												.				78	68					.
LBRH1	500	C	.	.	.	.	.	1	.	1	.	.	.	.	.	.	B	-	6	2	26	20	.	80	.	.	M
	1100	.			.												.				78	68					.
LBRH2	300	C	.	.	U	.	.	1	.	1	.	.	1	.	.	.	B	-	6	2	26	20	.	80	.	Y	M
	1100	.			.												.				78	68					.
LBRI1	500	C	.	LS	E	.	.	1	.	1	.	.	1	.	.	.	B	+	6	2	26	20	.	80	.	.	.
	1100	.			.												.				78	68					.
LBRP1	500	C	.	.	.	.	.	.	.	.	.	.	.	.	.	.	.	0	6	2	26	20	.	80	.	.	.
	1100	.			.												.				78	68					.
LBRS1	500	C	.	LS	E	.	.	1	.	1	.	.	.	.	.	.	B	-	6	2	26	20	.	80	.	Y	M
	1100	.			.												.				78	68					.
LBSC1	500	C	.	L	.	.	.	.	.	1	.	.	.	1	.	.	B	0	6	2	26	20	.	80	.	Y	M
	1100	.			.												.				78	68					.
LBSM1	500	C	R	L	.	.	.	1	.	1	.	.	.	.	.	.	B	+	6	2	26	20	.	90	95	.	M
	.	.			.												.				78	68					.
LBSP1	300	.	.	LS	.	.	.	.	.	1	.	.	.	.	.	.	B	0	6	2	26	20	.	80	.	.	.
	.	.			.												.				78	68					.
LBSS1	300	.	.	LS	.	.	.	.	.	1	.	.	.	.	.	.	B	0	6	2	26	20	.	80	.	.	.
	.																.				78	68					.
LBTS1	300	.	.	LS	E	.	.	.	.	.	.	.	.	.	.	.	.	+	6	2	26	20	.	80	.	.	.
	.	.			.												.				78	68					.
LBTS2	200	.	.	LS	E	.	.	.	.	.	.	.	.	.	.	.	.	+	6	2	26	20	.	80	.	.	.
	.	.			.												.				78	68					.

APPENDIX A
ARCHITECTURAL AND ENGINEERING DESIGN REQUIREMENTS

ROOM CODE	ROOM NAME	ARCHITECTURAL MATRL+FIN FL	WAL	CLG	CLG HT	DOOR SIZE	NOISE RM	SC	STRU FLR LOAD
LBUL1	LAB ULTRA LOW TEMP FREEZER AREA	PB	SPF	SPF	2700	900	.	.	5
		.	..	.	9-0	3-0	.		100
LBUR1	LAB UROLOGY URINE LAB	SV	GLG	AT2	2700	900	35	40	5
		.	..	.	9-0	3-0	40		100
LBVP1	LAB VENIPUNCTURE STATION 1	SV	GLG	AT2	2700	1200	30	40	5
		.	..	.	9-0	4-0	35		100
LBVP2	LAB VENIPUNCTURE/CONTROL STA CLINI	SV	GLG	AT2	2700	1200	30	40	5
		.	..	.	9-0	4-0	35		100
LBWA1	LAB WATER	SV	GLG	AT2	2700	900	30	40	5
		.	..	.	9-0	3-0	35		100
LCCL1	LINEN CONTROL, CLEAN	VT	GLG	AT2	2700	900	35	40	7.5
		SV	..	.	9-0	3-0	40		150
LCFA1	LINEN CONTROL, FOLDING AREA	VT	GLG	AT2	2700	900	35	40	7.5
		SV	..	.	9-0	3-0	40		150
LCS01	LINEN CONTROL, SEAMSTRESS	VT	GLG	AT2	2700	900	35	40	7.5
		SV	..	.	9-0	3-0	40		150
LCSL1	LINEN CONTROL, SOILED LINEN	VT	GLG	AT2	2700	900	35	40	5
		SV	..	.	9-0	3-0	40		100
LCUC1	LINEN CONTROL, UNIFORM CONVEYOR	VT	GLG	AT2	2700	900	35	40	5
		SV	..	.	9-0	3-0	40		200
LDAT1	LABOR & DELIVERY, ANTEPARTUM TESTIN	VT	GLG	AT2	2700	1200	30	45	3
		SV	..	.	9-0	4-0	35		60
LDBR1	LABOR & DELIVERY, BIRTHING ROOM	SV	GVF	AT2	3000	1200	30	45	3
		.	..	.	10-0	4-0	35		60
LDDR1	LABOR & DELIVERY, DELIVERY ROOM	ET	GCT	GLG	3000	J	30	45	3
		SV	GLG	.	10-0	.	35		60
LDEP1	LABOR & DELIVERY, EXAM AND PREP	VT	GLG	AT2	2400	1200	30	45	3
		SV	..	.	8-0	4-0	35		60
LDLR1	LABOR & DELIVERY, LABOR ROOM	SV	GLG	AT2	2400	1200	30	45	3
		VT	..	.	8-0	4-0	35		60
LDNS1	LABOR & DELIVERY, NURSE STATION	VT	GLG	AT2	2400	OPEN	30	45	5
		SV	..	.	8-0	OPEN	35		100

APPENDIX A
ARCHITECTURAL AND ENGINEERING DESIGN REQUIREMENTS

ROOM CODE	ELECTRICAL LIGHT LEV	N	EM PWR	LT	N	MEDICAL GASES MCA	DCA	LA	PA	MV	DHV	DLV	LDE	OX	NO	NI	N	HVAC BL	AC	OA	TEMP SM	WN	RH	FL IN	FN	EX	N
LBUL1	200	.	.	LS	E	.	.	.	.	.	.	.	.	.	.	.	.	+	6	2	.	.	.	.	.	.	.
	.	.			.												.				.	.					.
LBUR1	500	C	R	L	.	.	.	1	.	1	.	.	.	.	.	.	B	-	6	2	26	20	.	80	.	Y	M
	1100	.			.												.				78	68					.
LBVP1	700	C	R	L	.	.	.	.	.	1	.	.	.	1	.	.	B	0	6	2	26	20	.	80	.	.	.
	1100	.			.												.				78	68					.
LBVP2	700	C	R	L	.	.	.	.	.	1	.	.	.	1	.	.	B	0	6	2	26	20	.	80	.	.	.
	1100	.			.												.				78	68					.
LBWA1	300	.	R	L	.	.	.	1	.	1	.	.	.	.	.	.	B	0	6	2	26	20	.	.	.	.	.
	.	.			.												.				78	68					.
LCCL1	300	.	.	.	.	.	.	.	.	.	.	.	.	.	.	.	.	0	4	2	26	20	.	90	.	.	.
	.	.			.												.				78	70					.
LCFA1	300	.	.	.	.	.	.	.	.	.	.	.	.	.	.	.	.	0	4	2	26	20	.	90	.	.	.
	.	.			.												.				78	70					.
LCS01	1100	.	.	.	.	.	.	.	.	.	.	.	.	.	.	.	.	0	4	2	26	20	.	.	.	.	.
	.	.			.												.				78	70					.
LCSL1	200	.	.	.	.	.	.	.	.	.	.	.	.	.	.	.	.	-	10	2	24	24	.	.	.	Y	.
	.	.			.												.				75	75					.
LCUC1	.	.	.	.	.	.	.	.	.	.	.	.	.	.	.	.	.	0	4	2	26	20	.	.	.	.	.
	.				.												.				78	70					.
LDAT1	500	C	R	L	.	1	.	.	.	3	.	.	.	1	.	.	B	0	6	2	24	24	.	90	.	.	.
	1100	.			.												.				75	75					.
LDBR1	1100	A	R	LB	.	2	.	.	.	2	.	.	.	2	.	.	E	+	6	2	24	24	.	90	.	.	.
	.	D			.												.				75	75					.
LDDR1	2100	D	RA	LB	.	2	.	.	.	3	.	.	.	.	1	.	C	++	25	5	20	24	Y	90	90		C
	.	.			.												D				68	75					P
LDEP1	500	C	R	L	.	1	.	.	.	3	.	.	.	1	.	.	B	0	6	2	24	24	.	90	.	.	.
	1100	.			.												.				75	75					.
LDLR1	300	C	R1	L	.	1	.	.	.	3	.	.	.	1	.	.	B	0	6	2	24	24	.	90	.	.	.
	1100	.			.												.				75	75					.
LDNS1	300	C	R	L	.	.	.	.	.	.	.	.	.	.	.	.	.	0	6	2	24	24	.	90	.	.	.
	700	.			.												.				75	75					.

APPENDIX A
ARCHITECTURAL AND ENGINEERING DESIGN REQUIREMENTS

ROOM CODE	ROOM NAME	ARCHITECTURAL MATRL+FIN FL	WAL	CLG	CLG HT	DOOR SIZE	NOISE RM	SC	STRU FLR LOAD
LDRI1	LABOR & DELIVERY, RESUSCITATION ISL	ET	GLG	GLG	3000	OPEN	30	45	5
		SV	..	.	10-0	OPEN	35		100
LIBB1	LIBRARY, BOOK STACK AREA	CP	GVF	AT1	3000	OPEN	25	45	D
		.	..	.	10-0	OPEN	30		D
LIBC1	LIBRARY, CARD CATALOG	CP	GVF	AT1	3000	900	25	45	7.5
		.	..	.	10-0	3-0	30		150
LIBD1	LIBRARY, CHARGE DESK AREA	CP	GVF	AT1	3000	900	25	45	5
		.	..	.	10-0	3-0	30		100
LIBP1	LIBRARY, PERIODICALS STACKS	CP	GVF	AT1	3000	900	25	45	D
		.	..	.	10-0	3-0	30		D
LIBS1	LIBRARY, SEATING AREA, INFORMAL	CP	GVF	AT1	3000	900	25	45	3
		.	..	.	10-0	3-0	30		60
LIBS2	LIBRARY, SEATING AREA, FORMAL	CP	GVF	AT1	3000	900	25	45	5
		.	..	.	10-0	3-0	30		100
LIBV1	LIBRARY, AUDIOVISUAL ROOM	CP	GAF	AT1	3000	900	25	45	7.5
		.	..	.	10-0	3-0	30		150
LIBV2	LIBRARY, MICROFILM VIEWING ROOM	CP	GPT	AT1	3000	900	25	45	3
		.	..	.	10-0	3-0	30		60
LIBW1	LIBRARY, WORK AREA - LIBRARY STAFF	CP	GPT	AT1	2700	900	25	45	5
		.	..	.	9-0	3-0	30		100
LMAB1	LAB MODULE ANAEROBIC BACT' - TB	SV	GLG	GLG	2700	900	30	40	5
		.	..	.	9-0	3-0	35		100
LMBB1	LAB MODULE BLOOD BANK - BASIC	SV	GLG	AT2	2700	900	30	40	5
		.	..	.	9-0	3-0	35		100
LMBB2	LAB MODULE BLOOD BANK - COMM HOSP	SV	GLG	AT2	2700	900	30	40	C
		.	..	.	9-0	3-0	35		C
LMBB3	LAB MODULE BLOOD BANK - MED CENTER	SV	GLG	AT2	2700	900	30	40	C
		.	..	.	9-0	3-0	35		C
LMCH1	LAB MODULE CHEMISTRY - BASIC	SV	GLG	AT2	2700	900	35	40	C
		.	..	.	9-0	3-0	40		C
LMCH2	LAB MODULE CHEMISTRY - COMM HOSP	SV	GLG	AT2	2700	900	35	40	5
		.	..	.	9-0	3-0	40		100

APPENDIX A
ARCHITECTURAL AND ENGINEERING DESIGN REQUIREMENTS

ROOM CODE	ELECTRICAL LIGHT LEV	N	EM PWR	LT	N	MEDICAL GASES MC A	DC A	LA	PA	MV	DHV	DLV	DE	OX	NO	NI	N	HVAC BL	AC	OA	TEMP SM	WN	RH	FL IN	FN	EX	N
LDRI1	500	C	R	L	.	2	.	.	.	3	.	.	.	2	.	.	B	0	6	2	24	24	Y	90	.	.	.
	1100	.			.												C				75	75					.
LIBB1	300	.	.	LE	.	.	.	.	.	.	.	.	.	.	.	.	.	0	4	1	26	20	.	.	.	.	.
	.	.			.												.				78	68					.
LIBC1	500	.	.	.	.	.	.	.	.	.	.	.	.	.	.	.	.	0	4	1	26	20	.	.	.	.	.
	.	.			.												.				78	68					.
LIBD1	500	.	.	.	.	.	.	.	.	.	.	.	.	.	.	.	.	0	4	1	26	20	.	.	.	.	.
	.	.			.												.				78	68					.
LIBP1	500	.	.	.	.	.	.	.	.	.	.	.	.	.	.	.	.	0	4	1	26	20	.	.	.	.	.
	.	.			.												.				78	68					.
LIBS1	500	.	.	LE	.	.	.	.	.	.	.	.	.	.	.	.	.	0	6	1.5	26	20	.	.	.	.	.
	.	.			.												.				78	68					.
LIBS2	500	.	.	LE	.	.	.	.	.	.	.	.	.	.	.	.	.	0	6	1.5	26	20	.	.	.	.	.
	.	.			.												.				78	68					.
LIBV1	500	.	.	.	.	.	.	.	.	.	.	.	.	.	.	.	.	0	4	1	26	20	.	.	.	.	.
	.	.			.												.				78	68					.
LIBV2	200	.	.	.	.	.	.	.	.	.	.	.	.	.	.	.	.	0	4	1	26	20	.	.	.	.	.
	.	.			.												.				78	68					.
LIBW1	700	.	.	.	.	.	.	.	.	.	.	.	.	.	.	.	.	0	4	1	26	20	.	.	.	.	.
	.	.			.												.				78	68					.
LMAB1	500	C	R	L	.	.	.	1	.	1	.	.	.	.	.	.	B	0	6	2	26	20	.	.	.	Y	M
	1100	.			.												.				78	68					.
LMBB1	500	C	.	LS	E	.	.	.	.	.	.	.	.	.	.	.	.	0	6	2	26	20	.	.	.	.	.
	1100	.			.												.				78	68					.
LMBB2	500	C	.	LS	E	.	.	.	.	.	.	.	.	.	.	.	.	0	6	2	26	20	.	.	.	.	.
	1100	.			.												.				78	68					.
LMBB3	500	C	.	LS	E	.	.	.	.	.	.	.	.	.	.	.	.	0	6	2	26	20	.	.	.	.	.
	1100	.			.												.				78	68					.
LMCH1	500	C	R	L	.	.	.	1	.	1	.	.	.	.	.	.	B	-	6	2	26	20	.	80	.	Y	M
	1100	.			.												.				78	68					.
LMCH2	500	C	R	L	.	.	.	1	.	1	.	.	.	.	.	.	B	-	6	2	26	20	.	80	.	Y	.M
	1100	.			.												.				78	68					.

APPENDIX A
ARCHITECTURAL AND ENGINEERING DESIGN REQUIREMENTS

ROOM CODE	ROOM NAME	ARCHITECTURAL MATRL+FIN FL	WAL	CLG	CLG HT	DOOR SIZE	NOISE RM	SC	STRU FLR LOAD
LMCH3	LAB MODULE CHEMISTRY - MED CENTER	SV	GLG	AT2	2700	900	35	40	5
		.	..	.	9-0	3-0	40		100
LMCY1	LAB MODULE CYTOLOGY -BASIC	SV	GLG	AT2	2700	900	35	40	5
		.	..	.	9-0	3-0	40		100
LMCY2	LAB MODULE CYTOLOGY - COMM HOSP	SV	GLG	AT2	2700	900	35	40	5
		.	..	.	9-0	3-0	40		100
LMCY3	LAB MODULE CYTOLOGY - MED CENTER	SV	GLG	AT2	2700	900	35	40	5
		.	..	.	9-0	3-0	40		100
LMFB1	LAB MODULE FROZEN BLOOD - BASIC	SV	GLG	AT2	2700	900	35	40	5
		.	..	.	9-0	3-0	40		100
LMFB2	LAB MODULE FROZEN BLOOD - COMM HOSP	SV	GLG	AT2	2700	900	35	40	5
		.	..	.	9-0	3-0	40		100
LMFB3	LAB MODULE FROZEN BLOOD - MED CEN	SV	GLG	AT2	2700	900	35	40	5
		.	..	.	9-0	3-0	40		100
LMHC1	LAB MODULE HISTOLOGY/CYTOLOGY BASIC	SV	GLG	AT2	2700	900	35	40	5
		.	..	.	9-0	3-0	40		100
LMHI1	LAB MODULE HEMATOLOGY/IMMUNO/SEROL'	SV	GLG	AT2	2700	900	35	40	5
		.	..	.	9-0	3-0	40		100
LMHS1	LAB MODULE HISTOLOGY - BASIC	SV	GLG	AT2	2700	900	35	40	5
		.	..	.	9-0	3-0	40		100
LMHS2	LAB MODULE HISTOLOGY - COMM HOSP	SV	GLG	AT2	2700	900	35	40	5
		.	..	.	9-0	3-0	40		100
LMHS3	LAB MODULE HISTOLOGY - MED CEN	SV	GLG	AT2	2700	900	35	40	5
		.	..	.	9-0	3-0	40		100
LMM01	LAB MODULE MICROBIOLOGY - BASIC	SV	GLG	GLG	2700	900	35	40	5
		.	..	.	9-0	3-0	40		100
LMM02	LAB MODULE MICROBIOLOGY - COMM HOSP	SV	GLG	GLG	2700	900	35	40	5
		.	..	.	9-0	3-0	40		100
LMM03	LAB MODULE MICROBIOLOGY - MED CEN	SV	GLG	GLG	2700	900	35	40	5
		.	..	.	9-0	3-0	40		100
LMMP1	LAB MODULE MICROBIOLOGY/PARASITOLOG	SV	GLG	GLG	2700	900	35	40	5
		.	..	.	9-0	3-0	40		100

APPENDIX A
ARCHITECTURAL AND ENGINEERING DESIGN REQUIREMENTS

	ELECTRICAL					MEDICAL GASES											HVAC									
ROOM	LIGHT		EM PWR			M C A	D C A	L A	P A	M V	D H V	D L V	L D E	O X	N O	N I					TEMP		R H	FL		E X	
CODE	LEV	N	PWR	LT	N												N	BL	AC	OA	SM	WN		IN	FN		N
LMCH3	500	C	R	L		.	.	.	1	.	1	.	.	.	.	.	B	-	6	2	26	20	.	80	.	Y	M
	1100	.					.										.				78	68					.
LMCY1	500	C	R	L		.	.	.	1	.	1	.	.	.	.	.	B	-	6	2	26	20	.	80	.	Y	M
	1100	.					.										.				78	68					.
LMCY2	500	C	R	L		.	.	.	1	.	1	.	.	.	.	.	B	-	6	2	26	20	.	80	.	Y	M
	1100	.					.										.				78	68					.
LMCY3	500	C	R	L		.	.	.	1	.	1	.	.	.	.	.	B	-	6	2	78	68	.	80	.	Y	M
	1100	.					.										.				26	20					.
LMFB1	500	C	R	L		E	.	.	1	.	1	.	.	.	.	.	B	0	6	2	78	68	.	80	.	.	.
	1100	.					.										.				26	20					.
LMFB2	500	C	R	L		E	.	.	1	.	1	.	.	.	.	.	B	0	6	2	78	68	.	80	.	.	.
	1100	.					.										.				26	20					.
LMFB3	500	C	R	L		E	.	.	1	.	1	.	.	.	.	.	B	0	6	2	78	68	.	80	.	.	.
	1100	.					.										.				26	20					.
LMHC1	500	C	R	L		E	.	.	1	.	1	.	.	.	.	.	B	-	6	2	78	68	.	80	.	Y	M
	1100	.					.										.				26	20					.
LMHI1	500	C	R	L		E	.	.	1	.	1	.	.	.	.	.	B	-	6	2	78	68	.	80	.	Y	M
	1100	.					.										.				26	20					.
LMHS1	500	C	R	L		E	.	.	1	.	1	.	.	.	.	.	B	-	6	2	78	68	.	80	.	Y	M
	1100	.					.										.				26	20					.
LMHS2	500	C	R	L		E	.	.	1	.	1	.	.	.	.	.	B	-	6	2	26	20	.	80	.	Y	M
	1100	.					.										.				78	68					.
LMHS3	500	C	R	L		E	.	.	1	.	1	.	.	.	.	.	B	-	6	2	26	20	.	80	.	Y	M
	1100	.					.										.				78	68					.
LMM01	500	C	R	L		.	.	.	1	.	1	.	.	.	.	.	B	-	6	2	26	20	.	80	.	Y	M
	1100	.					.										.				78	68					.
LMM02	500	C	R	L		.	.	.	1	.	1	.	.	.	.	.	B	-	6	2	26	20	.	80	.	Y	M
	1100	.					.										.				78	68					.
LMM03	500	C	R	L		.	.	.	1	.	1	.	.	.	.	.	B	-	6	2	26	20	.	80	.	Y	M
	1100	.					.										.				78	68					.
LMMP1	500	C	R	L		.	.	.	1	.	1	.	.	.	.	.	B	-	6	2	26	20	.	80	.	Y	M
	1100	.					.										.				78	68					.

APPENDIX A
ARCHITECTURAL AND ENGINEERING DESIGN REQUIREMENTS

ROOM CODE	ROOM NAME	ARCHITECTURAL MATRL+FIN FL	WAL	CLG	CLG HT	DOOR SIZE	NOISE RM	SC	STRU FLR LOAD
LMMY1	LAB MODULE MYCOLOGY	SV	GLG	AT2	2700	900	35	40	5
		.	..	.	9-0	3-0	40		100
LMP01	LAB MODULE PARASITOLOGY - BASIC	SV	GLG	GLG	2700	900	35	40	5
		.	..	.	9-0	3-0	40		100
LMP02	LAB MODULE PARASITOLOGY - COMM HOSP	SV	GLG	GLG	2700	900	35	40	5
		.	..	.	9-0	3-0	40		100
LMP03	LAB MODULE PARASITOLOGY - MED CEN	SV	GLG	GLG	2700	900	35	40	5
		.	..	.	9-0	3-0	40		100
LMS01	LAB MODULE SEROLOGY - BASIC	SV	GLG	AT2	2700	900	35	40	5
		.	..	.	9-0	3-0	40		100
LMS02	LAB MODULE SEROLOGY - COMM HOSP	SV	GLG	AT2	2700	900	35	40	5
		.	..	.	9-0	3-0	40		100
LMS03	LAB MODULE SEROLOGY - MED CENTER	SV	GLG	AT2	2700	900	35	40	5
		.	..	.	9-0	3-0	40		100
LMSL1	LAB MODULE STAT LAB - BASIC	SV	GLG	AT2	2700	900	35	40	5
		.	..	.	9-0	3-0	40		100
LMSL2	LAB MODULE STAT LAB - COMM HOSP	SV	GLG	AT2	2700	900	35	40	5
		.	..	.	9-0	3-0	40		100
LMSL3	LAB MODULE STAT LAB - MED CENTER	SV	GLG	AT2	2700	900	35	40	5
		.	..	.	9-0	3-0	40		100
LMT01	LAB MODULE TOXICOLOGY - BASIC	SV	GLG	GLG	2700	900	35	40	5
		.	..	.	9-0	3-0	40		100
LMT02	LAB MODULE TOXICOLOGY - COMM HOSP	SV	GLG	GLG	2700	900	35	40	5
		.	..	.	9-0	3-0	40		100
LMT03	LAB MODULE TOXICOLOGY - MED CENTER	SV	GLG	GLG	2700	900	35	40	5
		.	..	.	9-0	3-0	40		100
LMT04	LAB MODULE TOXICOLOGY - DRUG SCREEN	SV	GLG	GLG	2700	900	35	40	5
		.	..	.	9-0	3-0	40		100
LMU01	LAB MODULE URINALYSIS - BASIC	SV	GLG	ALG	2700	900	35	40	5
		.	..	.	9-0	3-0	40		100
LMU02	LAB MODULE URINALYSIS - COMM HOSP	SV	GLG	AT2	2700	900	35	40	5
		.	..	.	9-0	3-0	40		100

APPENDIX A
ARCHITECTURAL AND ENGINEERING DESIGN REQUIREMENTS

ROOM CODE	ELECTRICAL LIGHT LEV	N	EM PWR PWR	LT	N	MEDICAL GASES MCA	DCA	LA	PA	MV	DHV	DLV	LDE	OX	NO	NI	N	HVAC BL	AC	OA	TEMP SM	WN	RH	FL IN	FN	EX	N
LMMY1	500	C	R	L	.	.	.	1	.	1	.	.	.	.	.	.	B	-	6	2	26	20	.	80	.	Y	M
	1100	.			.												.				78	68					.
LMP01	500	C	R	L	.	.	.	1	.	1	.	.	.	.	.	.	B	-	6	2	26	20	.	80	.	Y	M
	1100	.			.												.				78	68					.
LMP02	500	C	R	L	.	.	.	1	.	1	.	.	.	.	.	.	B	-	6	2	26	20	.	80	.	Y	M
	1100	.			.												.				78	68					.
LMP03	500	C	R	L	.	.	.	1	.	1	.	.	.	.	.	.	B	-	6	2	26	20	.	80	.	Y	M
	1100	.			.												.				78	68					.
LMS01	500	C	R	L	.	.	.	1	.	1	.	.	.	.	.	.	B	-	6	2	26	20	.	80	.	Y	M
	1100	.			.												.				78	68					.
LMS02	500	C	R	L	.	.	.	1	.	1	.	.	.	.	.	.	B	-	6	2	26	20	.	80	.	Y	M
	1100	.			.												.				78	68					.
LMS03	500	C	R	L	.	.	.	1	.	1	.	.	.	.	.	.	B	-	6	2	26	20	.	80	.	Y	M
	1100	.			.												.				78	68					.
LMSL1	500	C	R	L	.	.	.	1	.	1	.	.	.	.	.	.	B	-	4	2	26	20	.	80	.	.	.
	1100	.			.												.				78	68					.
LMSL2	500	C	R	L	.	.	.	1	.	1	.	.	.	.	.	.	B	0	4	2	26	20	.	80	.	.	.
	1100	.			.												.				78	68					.
LMSL3	500	C	R	L	.	.	.	1	.	1	.	.	.	.	.	.	B	0	4	2	26	20	.	80	.	.	.
	1100	.			.												.				78	68					.
LMT01	500	C	R	L	.	.	.	1	.	1	.	.	.	.	.	.	B	-	6	2	26	20	.	80	.	Y	M
	1100	.			.												.				78	68					.
LMT02	500	C	R	L	.	.	.	1	.	1	.	.	.	.	.	.	B	-	6	2	26	20	.	80	.	Y	M
	1100	.			.												.				78	68					.
LMT03	500	C	R	L	.	.	.	1	.	1	.	.	.	.	.	.	B	-	6	2	26	20	.	80	.	Y	M
	1100	.			.												.				78	68					.
LMT04	500	C	R	L	.	.	.	1	.	1	.	.	.	.	.	.	B	-	6	2	26	20	.	80	.	Y	M
	1100	.			.												.				78	68					.
LMU01	500	C	R	L	.	.	.	1	.	1	.	.	.	.	.	.	B	-	6	2	26	20	.	80	.	Y	M
	1100	.			.												.				78	68					.
LMU02	500	C	R	L	.	.	.	1	.	1	.	.	.	.	.	.	B	-	6	2	26	21	.	80	.	Y	M
	1100	.			.												.				78	70					.

APPENDIX A
ARCHITECTURAL AND ENGINEERING DESIGN REQUIREMENTS

ROOM CODE	ROOM NAME	ARCHITECTURAL MATRL+FIN FL	WAL	CLG	CLG HT	DOOR SIZE	NOISE RM	SC	STRU FLR LOAD
LMU03	LAB MODULE URINALYSIS - MED CENTER	SV	GLG	AT2	2700	900	35	40	5
		.	..	.	9-0	3-0	40		100
LMV01	LAB MODULE VIROLOGY - BASIC	SV	GLG	AT2	2700	900	35	40	5
		.	..	.	9-0	3-0	40		100
LMV02	LAB MODULE VIROLOGY - COMM HOSP	SV	GLG	AT2	2700	900	35	40	5
		.	..	.	9-0	3-0	40		100
LMV03	LAB MODULE VIROLOGY - MED CENTER	SV	GLG	AT2	2700	900	35	40	5
		.	..	.	9-0	3-0	40		100
LMVC1	LAB MODULE VIROLOGY CONTAM CONTROL	SV	GLG	AT2	2700	900	35	40	5
		.	..	.	9-0	3-0	40		100
LMVS1	LAB MODULE VIROLOGY STERILIZATION	SV	GLG	AT2	2700	900	35	40	5
		.	..	.	9-0	3-0	40		100
LOB01	LOBBY, HOSPITAL OR CLINIC	CP	GVF	AT2	VAR	SP	35	40	5
		SP	SSP	SSP	VAR	SP	40		100
LR001	LOCKER ROOM, 6.5 NSF/LOCKER	SV	GLG	AT2	2400	900	30	40	5
		VT	..	.	8-0	3-0	35		100
LR002	LOCKER ROOM, 10 NSF/LOCKER	SV	GLG	AT2	2400	900	30	40	5
		.	..	.	8-0	3-0	35		100
MEDP1	MEDICATION PREPARATION STATION	VT	GLG	AT2	2400	900	30	45	5
		.	..	.	8-0	3-0	35		100
MICL1	MEDICAL ILLUS, COPY LABORATORY	SV	GPT	AT1	2400	900	30	40	5
		VT	..	.	8-0	3-0	35		100
MIDR1	MEDICAL ILLUS, DARKROOM, DUAL	SV	GLG	AT1	2400	L	30	40	5
		VT	..	.	8-0		35		100
MIDR2	MEDICAL ILLUS, DARKROOM B&W	SV	GLG	AT1	2400	SP	30	40	5
		VT	..	.	8-0		35		100
MIDR3	MEDICAL ILLUS, DARKROOM, COLOR	SV	GLG	AT1	2400	SP	30	40	5
		VT	..	.	8-0		35		100
MIDR4	MEDICAL ILLUS, DARKROOM COPY CAMRA	SV	GLG	AT1	2400	SP	30	40	5
		VT	..	.	8-0		35		100
MIPF1	MEDICAL ILLUS, PHOTO FINISH	SV	GLG	AT1	2400	900	30	40	5
		VT	..	.	8-0	3-0	35		100

APPENDIX A
ARCHITECTURAL AND ENGINEERING DESIGN REQUIREMENTS

ROOM CODE	ELECTRICAL LIGHT LEV	N	EM PWR PWR	LT	N	MEDICAL GASES MCA	DCA	LA	PA	MV	DHV	DLV	LDE	OX	NO	NI	N	HVAC BL	AC	OA	TEMP SM	WN	RH	FL IN	FN	EX	N
LMU03	500	C	R	L	.	.	.	1	.	1	.	.	.	.	.	.	B	-	6	2	26	21	.	80	.	Y	M
	1100	.			.												.				78	70					.
LMV01	500	C	R	L	.	.	.	1	.	1	.	.	.	.	.	.	B	-	6	2	26	21	.	80	.	Y	M
	1100	.			.												.				78	79					.
LMV02	500	C	R	L	.	.	.	1	.	1	.	.	.	.	.	.	B	-	6	2	26	21	.	80.		Y	M
	1100	.			.												.				78	70					.
LMV03	500	C	R	L	.	.	.	1	.	1	.	.	.	.	.	.	B	-	6	2	26	21	.	80	.	Y	M
	1100	.			.												.				78	70					.
LMVC1	500	C	R	L	.	.	.	1	.	1	.	.	.	.	.	.	B	-	6	2	26	21	.	80	.	Y	M
	1100	.			.												.				78	70					.
LMVS1	500	C	R	L	.	.	.	1	.	1	.	.	.	.	.	.	B	-	6	2	26	21	.	80	.	Y	M
	1100	.			.												.				78	70					.
LOB01	150	.	.	LE	.	.	.	.	.	.	.	.	.	.	.	.	.	0	6	2	26	20	.		.	.	.
	.	.			.												.				78	68					.
LR001	200	.	.	LE	.	.	.	.	.	.	.	.	.	.	.	.	.	-	10	2	26	20	.		.	.	.
	.				.												.				78	68					.
LR002	200	.	.	LE	.	.	.	.	.	.	.	.	.	.	.	.	.	-	10	2	26	20	.		.	.	.
	.	.			.												.				78	68					.
MEDP1	1100	C	R	L	.	.	.	.	.	.	.	.	.	.	.	.	.	0	4	1	26	21	.	90	.	.	.
	.	.			.												.				78	70					.
MICL1	500	C	.	.	.	.	.	.	.	.	.	.	.	.	.	.	.	0	4	1	26	20	.	.	.	.	.
	1100	.			.												.				78	68					.
MIDR1	150	G	.	.	.	.	.	.	.	.	.	.	.	.	.	.	.	-	10	2	24	20	.	.	.	Y	.
	.	.			.												.				75	68					.
MIDR2	150	G	.	.	.	.	.	.	.	.	.	.	.	.	.	.	.	-	10	2	24	20	.	.	.	Y	.
	.	.			.												.				75	68					.
MIDR3	150	G	.	.	.	.	.	.	.	.	.	.	.	.	.	.	.	-	10	2	24	20	.	.	.	Y	.
	.	.			.												.				75	68					.
MIDR4	150	G	.	.	.	.	.	.	.	.	.	.	.	.	.	.	.	-	10	2	24	20	.	.	.	Y	.
	.	.			.												.				75	68					.
MIPF1	500	C	.	.	.	.	.	.	.	.	.	.	.	.	.	.	.	0	4	1	26	20	.	.	.	.	.
	1100	.			.												.				78	68					.

APPENDIX A
ARCHITECTURAL AND ENGINEERING DESIGN REQUIREMENTS

ROOM CODE	ROOM NAME	ARCHITECTURAL MATRL+FIN FL	WAL	CLG	CLG HT	DOOR SIZE	NOISE RM	SC	STRU FLR LOAD
MIPP1	MEDICAL ILLUS, PRINT PROCESS DUAL	SV	GLG	AT1	2400	900	30	40	5
		VT	..	.	8-0	3-0	35		100
MIPP2	MEDICAL ILLUS, PRINT PROCESS B&W	SV	GLG	AT1	2400	900	30	40	5
		VT	..	.	8-0	3-0	35		100
MIPP3	MEDICAL ILLUS, PRINT PROCESS COLOR	SV	GLG	AT1	2400	900	30	40	5
		VT	..	.	8-0	3-0	35		100
MIPP4	MEDICAL ILLUS, COLOR SLIDE PROCESS	SV	GLG	AT1	2400	900	30	40	5
		VT	..	.	8-0	3-0	35		100
MIST1	MEDICAL ILLUS, STUDIO	VT	GLG	AT1	2400	900	30	40	5
		.	..	.	8-0	3-0	35		100
MIST2	MEDICAL ILLUS, STUDIO - ANATOMY	VT	GLG	AT1	2400	900	30	40	5
		.	..	.	8-0	3-0	35		100
MIST3	MEDICAL ILLUS, PHOTO LAB AREA	SV	GLG	AT1	2400	900	30	40	5
		.	..	.	8-0	3-0	35		100
MMCR1	MEDICAL MATERIAL CART RECEIVING	VT	GPT	AT1	3000	E	35	50	5
		.	..	.	10-0		40		100
MMCR2	MEDICAL MATERIAL CART RESTOCKING AR	VT	GPT	AT1	3000	E	35	50	5
		.	..	.	10-0		40		100
MMES1	MEDICAL MATERIAL EQUIPMENT STORAGE	VT	GPT	AT1	3000	E	35	50	6
		.	..	.	10-0		40		125
MMGS1	MEDICAL MATERIAL GENERAL STORAGE	VT	GPT	AT1	B	1200	35	50	6
		.	..	.		4-0	40		125
MMRP1	MEDICAL MATERIAL RECEIVING/PROCESS	VT	GPT	AT1	B	1200	35	50	5
		.	..	.		4-0	40		100
MRMB1	MAIL ROOM, MAILBOX AREA	VT	GPT	AT1	2700	900	35	50	5
		.	..	.	9-0	3-0	40		100
MRPS1	MAIL ROOM, U.S. POST OFFICE	VT	GPT	AT1	2700	900	35	50	5
		.	..	.	9-0	3-0	40		100
MRRS1	MAIL ROOM, RECEIVING/SORTING	VT	GPT	AT1	2700	B	35	50	6
		.	..	.	9-0		40		125
MRS01	MED RECORDS STOR, FIXED	VT	GPT	AT1	2700	900	35	40	7.5
		.	..	.	9-0	3-0	40		150

APPENDIX A
ARCHITECTURAL AND ENGINEERING DESIGN REQUIREMENTS

ROOM CODE	ELECTRICAL LIGHT LEV	ELECTRICAL LIGHT N	ELECTRICAL EM PWR PWR	ELECTRICAL EM PWR LT	ELECTRICAL EM PWR N	MEDICAL GASES MCA	MEDICAL GASES DCA	MEDICAL GASES LA	MEDICAL GASES PA	MEDICAL GASES MV	MEDICAL GASES DHV	MEDICAL GASES DLV	MEDICAL GASES DLE	MEDICAL GASES OX	MEDICAL GASES NO	MEDICAL GASES NI	MEDICAL GASES N	HVAC BL	HVAC AC	HVAC OA	HVAC TEMP SM	HVAC TEMP WN	HVAC RH	HVAC FL IN	HVAC FL FN	HVAC EX	HVAC N
MIPP1	500	C	.	.	.	.	.	.	.	.	.	.	.	.	.	.	.	0	6	1.5	26	20	.	.	.	.	.
	.	.			.												.				78	68					.
MIPP2	500	C	.	.	.	.	.	.	.	.	.	.	.	.	.	.	.	0	6	1.5	26	20	.	.	.	.	.
	.	.			.												.				78	68					.
MIPP3	500	C	.	.	.	.	.	.	.	.	.	.	.	.	.	.	.	0	6	1.5	26	20	.	.	.	.	.
	.	.			.												.				78	68					.
MIPP4	500	C	.	.	.	.	.	.	.	.	.	.	.	.	.	.	.	0	6	1.5	26	20	.	.	.	.	.
	.	.			.												.				78	68					.
MIST1	500	C	.	.	.	.	.	.	.	.	.	.	.	.	.	.	.	0	4	1	26	20	.	.	.	.	.
	1600	.			.												.				78	68					.
MIST2	500	C	.	.	.	.	.	.	.	.	.	.	.	.	.	.	.	0	4	1	26	20	.	.	.	.	.
	1600	.			.												.				78	68					.
MIST3	500	C	.	.	.	.	.	.	.	.	.	.	.	.	.	.	.	0	4	1	26	20	.	.	.	.	.
	1100	.			.												.				78	68					.
MMCR1	50	.	.	.	.	.	.	.	.	.	.	.	.	.	.	.	.	0	4	1	26	20	.	.	.	.	.
	.	.			.												.				78	68					.
MMCR2	50	.	.	.	.	.	.	.	.	.	.	.	.	.	.	.	.	0	4	1	26	20	.	.	.	.	.
	.	.			.												.				78	68					.
MMES1	100	.	.	.	.	.	.	.	.	.	.	.	.	.	.	.	.	0	4	1	24	20	.	.	.	.	.
	.	.			.												.				75	68					.
MMGS1	100	.	.	.	.	.	.	.	.	.	.	.	.	.	.	.	.	0	4	1	26	20	.	.	.	.	.
	.	.			.												.				78	68					.
MMRP1	200	.	.	.	.	.	.	.	.	.	.	.	.	.	.	.	.	0	4	1	24	10	.	.	.	.	.
	.	.			.												.				75	55					.
MRMB1	500	.	.	.	.	.	.	.	.	.	.	.	.	.	.	.	.	0	4	1	26	20	.	.	.	.	.
	.	.			.												.				78	68					.
MRPS1	500	.	.	LE	.	.	.	.	.	.	.	.	.	.	.	.	.	0	4	1	26	20	.	.	.	.	.
	.	.			.												.				78	68					.
MRRS1	500	.	.	.	.	.	.	.	.	.	.	.	.	.	.	.	.	0	4	1	26	20	.	.	.	.	.
	1100	.			.												.				78	68					.
MRS01	300	.	.	.	.	.	.	.	.	.	.	.	.	.	.	.	.	0	4	1	26	20	.	.	.	.	.
	.	.			.												.				78	68					.

APPENDIX A
ARCHITECTURAL AND ENGINEERING DESIGN REQUIREMENTS

ROOM CODE	ROOM NAME	ARCHITECTURAL MATRL+FIN FL	WAL	CLG	CLG HT	DOOR SIZE	NOISE RM	SC	STRU FLR LOAD
MRS02	MED RECORDS STOR, MOVABLE	VT	GPT	AT1	2700	900	35	40	D
		CP	..	.	9-0	3-0	40		D
MRT01	MED RECORDS TRANSCRIPTION	CP	GPT	AT1	2400	900	25	40	3
		.	..	.	8-0	3-0	30		60
MRWK1	MED RECORDS WORKROOM	VT	GPT	AT1	2400	900	30	40	5
		CP	..	.	8-0	3-0	35		100
NBCD1	NUCLEAR/BIOLOGICAL/CHEM DECON CENTR	CS	SSP	SSP		SP	35	50	5
		.	..	.		SP	40		100
NCWD1	NOURISHMENT CENTER, WARD	VT	GLG	AT1	2400	OPEN	35	40	5
		SV	GPT	.	8-0	OPEN	40		100
NCWD2	NOURISHMENT CENTER, MULTI-WARD	VT	GLG	AT1	2400	OPEN	35	40	5
		SV	GPT	.	8-0		40		100
NMCR1	NUCLEAR MEDICINE, COMPUTER ROOM	CP	GLG	AT1	2400	900	30	40	5
		VT	..	.	8-0	3-0	35		100
NMDC1	NUCLEAR MEDICINE, DOSE CALIBRATION	SV	GLG	AT1	2400	900	30	40	3
		.	..	.	8-0	3-0	35		60
NMDS1	NUCLEAR MEDICINE, DECAY STORAGE	SV	GLG	AT1	2400	900	30	40	3
		.	..	.	8-0	3-0	35		60
NMGS1	NUCLEAR MEDICINE, GENERAL SCANNING	SV	GLG	AT1	3000	1200	30	40	5
		.	..	.	10-0	4-0	35		100
NMIR1	NUCLEAR MEDICINE, INJECTION ROOM	SV	GLG	AT1	2400	1050	30	40	3
		.	..	.	8-0	3-6	35		60
NMRC1	NUCLEAR MEDICINE, RAD. CART HOLD	SV	GLG	AT1	2400	900	30	40	5
		.	..	.	8-0	3-0	35		100
NMRP1	NUCLEAR MEDICINE, RADIOPHARMACY	SV	GLG	AT1	2400	900	30	40	5
		.	..	.	8-0	3-0	35		100
NMSS1	NUCLEAR MEDICINE, SPECIAL SCANNING	SV	GLG	AT1	2400	900	30	40	5
		.	..	.	8-0	3-0	35		100
NMUR1	NUCLEAR MEDICINE, UPTAKE ROOM	SV	GLG	AT1	2400	900	30	40	5
		.	..	.	8-0	3-0	35		100
NMWB1	NUCLEAR MEDICINE WHOLE BODY COUNT L	SV	GLG	AT1	3000	1200	30	40	5
		.	..	.	10-0	4-0	35		100

APPENDIX A
ARCHITECTURAL AND ENGINEERING DESIGN REQUIREMENTS

ROOM CODE	ELECTRICAL LIGHT LEV	N	EM PWR PWR	LT	N	MEDICAL GASES MC A	DC A	LA A	PA A	MV V	DHV V	DLV V	DLE	OX	NO	NI	N	HVAC BL	AC	OA	TEMP SM	WN	RH	FL IN	FN	EX	N
MRS02	300	.	.	.	.	.	.	.	.	.	.	.	.	.	.	.	.	0	4	1	26	20	.	.	.	.	.
	.	.			.												.				78	68					.
MRT01	700	.	.	.	.	.	.	.	.	.	.	.	.	.	.	.	.	0	4	1	26	20	.	.	.	.	.
	.	.			.												.				78	68					.
MRWK1	700	.	.	.	.	.	.	.	.	.	.	.	.	.	.	.	.	0	4	1	26	20	.	.	.	.	.
	.	.			.												.				78	68					.
NBCD1	500	C	R	L	.	1	.	.	1	1	.	.	.	1	.	.	B	-	6	2	26	20	.	90	.	Y	M
	.	.			.												.				78	68					.
NCWD1	500	.	.	.	U	.	.	.	.	.	.	.	.	.	.	.	.	0	6	2	26	20	.	80	.	.	.
	.	.			.												.				78	68					.
NCWD2	500	.	.	.	U	.	.	.	.	.	.	.	.	.	.	.	.	0	6	2	26	20	.	90	.	Y	.
	.	.			.												.				78	68					.
NMCR1	500	.	.	LS	.	.	.	.	.	.	.	.	.	.	.	.	.	0	6	2	26	20	.	.	.	.	.
	.	.			.												.				78	68					.
NMDC1	500	C	.	LS	.	1	.	.	.	1	.	.	.	1	.	.	.	-	6	2	26	20	.	90	.	Y	M
	1100	.			.												.				78	68					.
NMDS1	300	.	.	LS	E	.	.	.	.	.	.	.	.	.	.	.	.	-	6	2	26	20	.	90	.	Y	.
	.	.			.												.				78	68					.
NMGS1	500	A	.	LS	.	1	.	.	.	1	.	.	.	1	.	.	.	-	6	2	26	20	.	.	.	Y	.
	.	C			.												.				78	68					.
NMIR1	700	A	.	LS	.	1	.	.	.	1	.	.	.	1	.	.	.	+	6	2	26	20	.	90	.	Y	.
	.	C			.												.				78	68					.
NMRC1	300	.	.	LS	E	.	.	.	.	.	.	.	.	.	.	.	.	0	4	1	26	20	.	.	.	.	.
	.	.			.												.				78	68					.
NMRP1	500	A	.	LS	.	1	.	.	.	1	.	.	.	.	.	.	.	-	6	2	26	20	.	.	.	Y	M
	.	C			.												.				78	68					.
NMSS1	500	C	.	LS	E	1	.	.	.	1	.	.	.	1	.	.	.	0	6	2	26	20	.	90	.	.	.
	.	.			.												.				78	68					.
NMUR1	200	.	.	LS	E	1	.	.	.	1	.	.	.	1	.	.	.	0	6	2	26	20	.	.	.	.	.
	.	.			.												.				78	68					.
NMWB1	500	C	.	LS	E	1	.	.	.	1	.	.	.	1	.	.	.	0	6	2	26	20	.	90	.	.	.
	.	.			.												.				78	68					.

ROOM CODE	ROOM NAME	ARCHITECTURAL MATRL+FIN FL	WAL	CLG	CLG HT	DOOR SIZE	NOISE RM	SC	STRU FLR LOAD
NMWB2	NUCLEAR MEDICINE WHOLE BODY COUNT H	SV	GLG	AT1	3000	1200	30	45	5
		.	..	.	10-0	4-0	35		100
NPBF1	NEURO/PSYCH BIOFEEDBACK TX ROOM	CP	GPT	AT1	2400	900	30	40	3
		.	GVT	.	8-0	3-0	35		60
NPGT1	NEURO/PSYCH GROUP THERAPY RM	CP	GPT	AT1	2700	900	30	40	3
		.	GVP	.	9-0	3-0	35		60
NPPT1	NEURO/PSYCH TESTING ROOM	CP	GPT	AT1	2400	900	30	40	3
		.	GVP	.	8-0	3-0	35		60
NPPT2	NEURO/PSYCH PEDIATRIC TESTING	CP	GPT	AT1	2400	900	30	40	3
		.	GVP	.	8-0	3-0	35		60
NSTA1	NURSE STATION, INPATIENT WARD	CP	GVF	AT1	2400	M	35	40	5
		VT	..	.	8-0		40		100
NSTA2	NURSE STATION, PHYSIO MONITORING	CP	GVF	AT1	2400	M	35	40	5
		VT	..	.	8-0		40		100
NSTA3	NURSE STATION, SUBSTATION	CP	GVF	AT1	2400	M	35	40	5
		VT	..	.	8-0		40		100
NSTA4	NURSE STATION, OUTPATIENT CLINICS	CP	GVF	AT1	2400	M	35	40	5
		VT	GPT	.	8-0		40		100
NSTA5	NURSE STATION, EMERGENCY ROOM	SV	GVF	AT1	2400	M	35	40	5
		VT	GPT	.	8-0		40		100
NSTA6	NURSE STATION, STEP-DOWN UNITS	CP	GVF	AT1	2400	M	35	40	5
		VT	GPT	.	8-0		40		100
NYA01	NURSERY ADMISSION/OBSERVATION	SV	GLG	AT2	2700	1200	25	45	3
		VT	GPT	.	9-0	4-0	30		60
NYAR1	NURSERY ANTEROOM WITH SCRUB SINK	SV	GLG	AT2	2700	1200	25	45	3
		VT	GPT	.	9-0	4-0	30		60
NYCC1	NURSERY CONTINUING CARE	SV	GLG	AT2	2700	1200	25	45	3
		VT	GPT	.	9-0	4-0	30		60
NYFA1	NURSERY FEEDING AREA	SV	GLG	AT2	2700	1200	25	45	3
		VT	GPT	.	9-0	4-0	30		60
NYIC1	NURSERY INTERMEDIATE CARE	SV	GLG	AT2	2700	F	25	45	3
		VT	GPT	.	9-0		30		60

APPENDIX A
ARCHITECTURAL AND ENGINEERING DESIGN REQUIREMENTS

ROOM CODE	ELECTRICAL LIGHT LEV	N	EM PWR PWR	LT	N	MEDICAL GASES MCA	DCA	LAA	PAA	MVV	DHV	DLV	LDE	OXO	NOI	N	HVAC BL	AC	OA	TEMP SM	WN	RH	FL IN	FN	EX	N
NMWB2	500	A	.	LS	.	1	.	.	.	1	.	.	.	1	.	.	0	6	2	26	20	.	.	.	.	.
	.	C			.											.				78	68					.
NPBF1	700	A	.	.	.	.	.	.	.	.	.	.	.	.	.	.	0	4	2	26	20	.	.	.	.	.
	.	C			.											.				78	68					.
NPGT1	500	C	.	LE	.	.	.	.	.	.	.	.	.	.	.	.	0	6	2	26	20	.	.	.	.	.
	.	.			.											.				78	68					.
NPPT1	500	C	.	.	.	.	.	.	.	.	.	.	.	.	.	.	0	4	2	26	20	.	.	.	.	.
	.	.			.											.				78	68					.
NPPT2	500	C	.	.	.	.	.	.	.	.	.	.	.	.	.	.	0	4	2	26	20	.	.	.	.	.
	.	.			.											.				78	68					.
NSTA1	300	C	R	L	.	.	.	.	.	.	.	.	.	.	.	.	0	6	2	26	20	.	90	.	.	.
	700	.			.											.				78	68					.
NSTA2	300	C	R	L	.	.	.	.	.	.	.	.	.	.	.	.	0	6	2	26	20	.	90	.	.	.
	.	.			.											.				78	68					.
NSTA3	300	C	R	L	.	.	.	.	.	.	.	.	.	.	.	.	0	6	2	26	20	.	90	.	.	.
	700	.			.											.				78	68					.
NSTA4	300	C	.	LE	.	.	.	.	.	.	.	.	.	.	.	.	0	4	2	26	20	.	90	.	.	.
	700	.			.											.				78	68					.
NSTA5	500	C	RA	L	.	.	.	.	.	.	.	.	.	.	.	.	0	4	2	26	20	.	90	.	.	.
	1100	.			.											.				78	68					.
NSTA6	300	C	R	L	.	.	.	.	.	.	.	.	.	.	.	.	0	6	2	26	20	.	90	.	.	.
	700	.			.											.				78	68					.
NYA01	700	A	R	L	.	1	.	.	.	1	.	.	.	1	.	.	G	++	12	3	23	27	.	90	.	.	P
	.	C			.											.				74	80					.
NYAR1	300	.	.	.	.	.	.	.	.	.	.	.	.	.	.	.	+		12	3	23	27	Y	90	.	.	P
	.	.			.											.				74	80					.
NYCC1	700	A	R	L	.	1	.	.	.	1	.	.	.	1	.	.	H	+	12	5	23	27	Y	90	.	.	P
	.	C			.											.				74	80					.
NYFA1	500	A	.	LS	.	1	.	.	.	1	.	.	.	1	.	.	0	6	1.5	23	27	Y	90	.	.	P
	.	C			.											.				74	80					.
NYIC1	700	A	R	L	.	2	.	.	.	2	.	.	.	2	.	.	G	++	12	5	23	27	Y	90	.	.	P
	.	C			.											.				74	80					.

ROOM CODE	ROOM NAME	ARCHITECTURAL MATRL+FIN FL	WAL	CLG	CLG HT	DOOR SIZE	NOISE RM	SC	STRU FLR LOAD
NYIC2	NURSERY INTENSIVE CARE	SV	GLG	AT2	2700	1200	25	45	3
		VT	..	.	9-0	4-0	30		60
NYIR1	NURSERY ISOLATION ROOM	SV	GLG	AT2	2700	1200	25	45	3
		VT	..	.	9-0	4-0	30		60
NYNN1	NURSERY NORMAL NEWBORN	SV	GLG	AT2	2700	1200	25	45	3
		VT	..	.	9-0	4-0	30		60
NYNS1	NURSERY NURSING STATION	VT	GLG	AT2	2700	900	25	45	5
		CP	..	.	9-0	3-0	30		100
NYPR1	NURSERY PROCEDURE ROOM	SV	GLG	AT2	2700	1200	25	45	3
		.	..	.	9-0	4-0	30		60
NYPT1	NURSERY TEACHING PARENTS ROOM	CP	GVF	AT1	2400	900	30	45	3
		.	..	.	8-0	3-0	35		60
NYRR1	NURSERY RESPIRATORY RESUSCITATION	SV	GLG	AT2	2700	N	30	45	3
		VT	GPT	.	9-0		35		60
NYTU1	NURSERY TRANSPORT UNIT ALCOVE	SV	GLG	AT2	2400	OPEN	30	45	3
		VT	GPT	.	8-0	OPEN	35		60
NYWE1	NURSERY WORK & EXAM AREA	SV	GLG	AT1	2700	1200	30	45	3
		VT	GPT	.	9-0	4-0	35		60
OBSR1	OBSERVATION ROOM ONE-WAY MIRROR	CP	GPT	AT1	2400	900	20	30	3
		.	..	.	8-0	3-0	25		60
OFA01	OFFICE, ADMINISTRATIVE, STD FURN.	CP	GPT	AT1	2400	900	30	40	3
		.	..	.	8-0	3-0	35		60
OFA02	OFFICE, ADMINISTRATIVE, SYS FURN.	CP	GPT	AT1	2400	900	30	40	3
		.	..	.	8-0	3-0	35		60
OFC01	OFFICE, COMMANDER, SMALL FACILITY	CP	GVF	AT1	2400	900	30	40	3
		.	..	.	8-0	3-0	35		60
OFC02	OFFICE, COMMANDER, MEDIUM FACILITY	CP	GVF	AT1	2400	900	30	40	3
		.	..	.	8-0	3-0	35		60
OFC03	OFFICE, COMMANDER, LARGE FACILITY	CP	GVF	AT1	2600	900	30	45	3
		.	..	.	8-6	3-0	35		60
OFD01	OFFICE, MEDICAL PROVIDER	VT	GPT	AT1	2400	900	30	40	3
		.	..	.	8-0	3-0	35		60

APPENDIX A
ARCHITECTURAL AND ENGINEERING DESIGN REQUIREMENTS

ROOM CODE	ELECTRICAL LIGHT LEV	N	EM PWR PWR	LT	N	MEDICAL GASES MCA	DCA	LA	PA	MV	DHV	DLV	LDE	OX	NO	NI	N	HVAC BL	AC	OA	TEMP SM	WN	RH	FL IN	FN	EX	N
NYIC2	700	A	RC	L	.	3	.	.	.	3	.	.	.	3	.	.	G	++	12	5	23	27	Y	90	.	.	P
	.	C			.												.				74	80					.
NYIR1	700	A	R	L	.	3	.	.	.	3	.	.	.	3	.	.	.	+-	6	2	23	27	Y	90	.	Y	P
	.	C			.												.				74	80					A
NYNN1	700	A	R	L	.	1	.	.	.	1	.	.	.	1	.	.	H	++	12	5	23	27	Y	90	.	.	P
	.	C			.												.				74	80					.
NYNS1	300	C	R	L	.	.	.	.	.	.	.	.	.	.	.	.	.	0	6	2	26	21	.	90	.	.	.
	700	.			.												.				78	70					.
NYPR1	500	C	R	L	.	2	.	.	.	2	.	.	.	2	.	.	G	++	12	5	23	27	Y	90	90	.	P
	1100	.			.												.				74	80					.
NYPT1	700	A	.	.	.	.	.	.	.	.	.	.	.	.	.	.	.	+	6	2	23	27	Y	.	.	.	P
	.	C			.												.				74	80					.
NYRR1	500	C	R	L	.	2	.	.	.	2	.	.	.	2	.	.	G	++	12	5	23	27	Y	90	.	.	P
	1100	.			.												.				74	80					.
NYTU1	500	C	R	L	.	.	.	.	.	.	.	.	.	.	.	.	.	0	4	1	26	20	.	90	.	.	.
	.	.			.												.				78	68					.
NYWE1	500	C	R	L	.	1	.	.	.	1	.	.	.	1	.	.	G	++	12	5	23	27	Y	90	.	.	P
	1100	.			.												.				74	80					.
OBSR1	300	A	.	.	.	.	.	.	.	.	.	.	.	.	.	.	.	0	4	1	26	20	.	.	.	.	.
	.	.			.												.				78	68					.
OFA01	300	.	.	.	.	.	.	.	.	.	.	.	.	.	.	.	.	0	4	1	26	20	.	.	.	.	.
	500	.			.												.				78	68					.
OFA02	300	.	.	.	.	.	.	.	.	.	.	.	.	.	.	.	.	0	4	1	26	20	.	.	.	.	.
	500	.			.												.				78	68					.
OFC01	300	.	.	.	.	.	.	.	.	.	.	.	.	.	.	.	.	0	4	1	26	20	.	.	.	.	.
	500	.			.												.				78	68					.
OFC02	300	.	.	.	.	.	.	.	.	.	.	.	.	.	.	.	.	0	4	1	26	20	.	.	.	.	.
	500	.			.												.				78	68					.
OFC03	300	.	.	.	.	.	.	.	.	.	.	.	.	.	.	.	.	0	4	1	26	20	.	.	.	.	.
	500	.			.												.				78	68					.
OFD01	300	.	.	.	.	.	.	.	.	.	.	.	.	.	.	.	.	0	4	1	26	20	.	.	.	.	.
	500	.			.												.				78	68					.

APPENDIX A
ARCHITECTURAL AND ENGINEERING DESIGN REQUIREMENTS

ROOM CODE	ROOM NAME	ARCHITECTURAL MATRL+FIN FL	WAL	CLG	CLG HT	DOOR SIZE	NOISE RM	SC	STRU FLR LOAD
OFD02	OFFICE, MEDICAL PROVIDER RESIDENTS	CP	GPT	AT1	2400	900	30	40	3
		.	..	.	8-0	3-0	35		60
OFD03	OFFICE, ANATOMIC PATHOLOGIST	SV	GLG	AT2	2400	900	30	40	3
		.	..	.	8-0	3-0	35		60
OFDR1	OFFICE, DOCTOR, RADIOLOGY	CP	GLG	AT1	2400	900	30	40	3
		.	..	.	8-0	3-0	35		60
OFDR2	OFFICE, RESIDENT, RADIOLOGY	CP	GVF	AT1	2400	900	30	40	3
		.	..	.	8-0	3-0	35		60
OFE01	OFFICE, XO/CHIEF PROF SVCS, SMALL	CP	GVF	AT1	2400	900	30	40	3
		.	..	.	8-0	3-0	35		60
OFE02	OFFICE, XO/CHIEF PROF SVCS, LARGE	CP	GVF	AT1	2400	900	30	40	3
		.	..	.	8-0	3-0	35		60
OFER2	OFFICE, EXECUTIVE RADIOLOGY LARGE	CP	GPT	AT1	2400	900	30	40	3
		.	..	.	8-0	3-0	35		60
OFM01	OFFICE, MID-MANAGEMENT, SMALL	CP	GPT	AT1	2400	900	30	40	3
		.	..	.	8-0	3-0	35		60
OFM02	OFFICE, MID-MANAGEMENT, LARGE	CP	GPT	AT1	2400	900	30	40	3
		.	..	.	8-0	3-0	35		60
OFMR1	OFFICE, MID-MANAGEMENT RADIOLOGY SM	CP	GPT	AT1	2400	900	30	40	3
		.	..	.	8-0	3-0	35		60
OFMR2	OFFICE, EXECUTIVE, RADIOLOGY	CP	GPT	AT1	2400	900	35	40	3
		.	..	.	8-0	3-0	40		60
OFNP1	OFFICE, NEURO-PSYCH	CP	GPT	AT1	2400	900	35	40	3
		.	..	.	8-0	3-0	40		60
OFWP1	OFFICE, NEURO-PSYCH, CONSULTATION	CP	GPT	AT1	2400	900	30	40	3
		.	..	.	8-0	3-0	35		60
OPAI1	OUTPATIENT ALLERGY INJECTION ROOM	SV	GLG	AT1	2400	900	30	40	3
		VT	GPT	.	8-0	3-0	35		60
OPAS1	OUTPATIENT ALLERGY SKIN TESTING	SV	GLG	AT1	2400	900	30	40	3
		VT	GPT	.	8-0	3-0	35		60
OPCR1	OUTPATIENT CAST ROOM PER STATION	SV	GLG	AT2	2700	G	35	50	3
		.	..	.	9-0		40		60

APPENDIX A
ARCHITECTURAL AND ENGINEERING DESIGN REQUIREMENTS

ROOM CODE	ELECTRICAL LIGHT LEV	N	EM PWR PWR	LT	N	MEDICAL GASES MCA	DCA	LAA	PAA	MVV	DHV	DLV	LDE	OXO	NOI	N	HVAC BL	AC	OA	TEMP SM	WN	RH	FL IN	FN	EX	N
OFD02	300	.	.	.	.	.	.	.	.	.	.	.	.	.	.	.	0	4	1	26	20	.	90	.	.	.
	500	.			.											.				78	68					.
OFD03	300	.	.	.	.	.	.	.	.	.	.	.	.	.	.	.	0	4	1	26	20	.	90	.	.	.
	500	.			.											.				78	68					.
OFDR1	300	.	.	.	.	.	.	.	.	.	.	.	.	.	.	.	0	4	1	26	20	.	90	.	.	.
	500	.			.											.				78	68					.
OFDR2	300	.	.	.	.	.	.	.	.	.	.	.	.	.	.	.	0	4	1	26	20	.	90	.	.	.
	500	.			.											.				78	68					.
OFE01	300	.	.	.	.	.	.	.	.	.	.	.	.	.	.	.	0	4	1	26	20	.	.	.	.	.
	500	.			.											.				78	68					.
OFE02	300	.	.	.	.	.	.	.	.	.	.	.	.	.	.	.	0	4	1	26	20	.	.	.	.	.
	500	.			.											.				78	68					.
OFER2	300	.	.	.	.	.	.	.	.	.	.	.	.	.	.	.	0	4	1	26	20	.			.	.
	500	.			.											.				78	68					.
OFM01	300	.	.	.	.	.	.	.	.	.	.	.	.	.	.	.	0	4	1	26	20	.	.	.	.	.
	500	.			.											.				78	68					.
OFM02	300	.	.	.	.	.	.	.	.	.	.	.	.	.	.	.	0	4	1	26	20	.	.	.	.	.
	500	.			.											.				78	68					.
OFMR1	300	.	.	.	.	.	.	.	.	.	.	.	.	.	.	.	0	4	1	26	20	.	.	.	.	.
	500	.			.											.				78	68					.
OFMR2	300	.	.	.	.	.	.	.	.	.	.	.	.	.	.	.	0	4	1	26	20	.	.	.	.	.
	500	.			.											.				78	68					.
OFNP1	300	.	.	.	.	.	.	.	.	.	.	.	.	.	.	.	0	4	1	26	20	.	.	.	.	.
	500	.			.											.				78	68					.
OFWP1	300	.	.	.	.	.	.	.	.	.	.	.	.	.	.	.	0	4	1	26	20	.	.	.	.	.
	500	.			.											.				78	68					.
OPAI1	500	C	.	.	.	.	.	.	.	1	.	.	.	1	.	B	0	4	2	26	20	.	90	.	.	.
	1100	.			.											.				78	68					.
OPAS1	500	C	.	.	.	.	.	.	.	1	.	.	.	1	.	B	0	4	2	26	20	.	90	.	.	.
	1100	.			.											.				78	68					.
OPCR1	500	C	.	.	.	1	.	.	.	2	.	.	.	1	.	B	0	10	2	26	21	.	90	.	Y	.
	.	.			.											.				78	70					.

APPENDIX A
ARCHITECTURAL AND ENGINEERING DESIGN REQUIREMENTS

ROOM CODE	ROOM NAME	ARCHITECTURAL MATRL+FIN FL	WAL	CLG	CLG HT	DOOR SIZE	NOISE RM	SC	STRU FLR LOAD
OPCT1	OUTPATIENT CHEMOTHERAPY AREA	SV	GLG	AT1	2700	900	30	40	3
		VT	..	.	9-0	3-0	35		60
OPCT2	OUTPATIENT CHEMOTHERAPY TX PREP RM	SV	GLG	AT1	2400	900	30	40	3
		VT	..	.	8-0	3-0	35		60
OPDG1	OUTPATIENT DERMATOLOGY GRENZ RAY RM	VT	GLG	AT1	2400	900	30	40	3
		.	GPT	.	8-0	3-0	35		60
OPDU1	OUTPATIENT DERMATOLOGY UV BOOTH	VT	GPT	AT1	2400	900	30	40	3
		.	..	.	8-0	3-0	35		60
OPEC1	OUTPATIENT ECG TESTING AREA 1BED	VT	GPT	AT1	2400	900	30	40	3
		.	..	.	8-0	3-0	35		60
OPEC2	OUTPATIENT ECG WORK AREA 1 STATION	VT	GPT	AT1	2400	900	30	40	3
		.	..	.	8-0	3-0	35		60
OPEE1	OUTPATIENT EEG TESTING AREA 1 STA.	VT	GPT	AT1	2400	900	30	40	3
		.	..	.	8-0	3-0	35		60
OPEE2	OUTPATIENT EEG WORK AREA 1 STATION	VT	GPT	AT1	2400	900	25	40	3
		.	..	.	8-0	3-0	30		60
OPEM1	OUTPATIENT ESOPHAGEAL MOTILITY	SV	GPT	AT1	2400	900	30	40	3
		.	..	.	8-0	3-0	35		60
OPHM1	OUTPATIENT HOLTER MONITOR ROOM	VT	GPT	AT1	2400	900	30	40	3
		.	..	.	8-0	3-0	35		60
OPIA1	OUTPATIENT IMPEDANCE AUDIOMETRY	CP	GPT	AT1	2400	900	25	40	3
		.	..	.	8-0	3-0	30		60
OPIR1	OUTPATIENT IMMUNIZATION ROOM	VT	GLG	AT2	2700	1050	35	40	3
		SV	..	.	9-0	3-6	40		60
OPNR1	OUTPATIENT NEPHROLOGY RENAL STUDY	SV	GLG	AT2	2700	900	30	40	3
		.	..	.	9-0	3-0	35		60
OPPE1	OUTPATIENT PHONO/ECHOCARDIOGRAPH T	CP	GAF	AT1	2400	1050	30	40	3
		VT	GPT	.	8-0	3-6	35		60
OPPF1	OUTPATIENT PULMO FUNCT LAB	VT	GPT	AT1	2700	900	30	40	3
		.	..	.	9-0	3-0	35		60
OPPF2	OUTPATIENT PULMO FUNCT FLOW LOOP	VT	GPT	AT1	2700	900	35	50	3
		.	..	.	9-0	3-0	40		60

APPENDIX A
ARCHITECTURAL AND ENGINEERING DESIGN REQUIREMENTS

ROOM CODE	ELECTRICAL LIGHT LEV	N	EM PWR PWR	LT	N	MEDICAL GASES MC A	DC A	LA	PA	MV	DHV	DLV	DE	OX	NO	NI	N	HVAC BL	AC	OA	TEMP SM	WN	RH	FL IN	FN	EX	N
OPCT1	500	C	.	.	.	1	.	.	.	1	.	.	.	1	.	.	B	0	4	2	26	20	.	90	.	.	.
	.	.			.												.				78	68					.
OPCT2	500	C	.	.	.	.	.	.	.	.	.	.	.	.	.	.	.	0	6	2	26	20	.	90	.	.	.
	.	.			.												.				78	68					.
OPDG1	500	C	.	.	.	.	.	.	.	.	.	.	.	.	.	.	.	0	4	2	26	20	.	90	.	.	.
	1100	.			.												.				78	68					.
OPDU1	500	A	.	.	.	.	.	.	.	.	.	.	.	.	.	.	.	-	4	2	26	20	.	90	.	.	.
	.	C			.												.				78	68					.
OPEC1	300	C	.	.	.	.	.	.	.	1	.	.	.	1	.	.	.	0	4	2	26	21	.	90		.	.
	.	.			.												.				78	70					.
OPEC2	500	C	.	.	.	.	.	.	.	.	.	.	.	.	.	.	.	0	4	2	26	20	.	90	.	.	.
	.	.			.												.				78	68					.
OPEE1	300	A	.	.	.	.	.	.	.	1	.	.	.	1	.	.	.	0	4	2	26	20	.	90	.	.	.
	.	C			.												.				78	68					.
OPEE2	1100	C	.	.	.	.	.	.	.	.	.	.	.	.	.	.	.	0	4	2	26	20	.	90	.	.	.
	.	.			.												.				78	68					.
OPEM1	500	C	.	.	.	.	.	.	.	1	.	.	.	1	.	.	.	0	4	1	26	20	.	90	.	.	.
	.	.			.												.				78	68					.
OPHM1	500	C	.	.	.	.	.	.	.	.	.	.	.	.	.	.	.	0	4	1	26	20	.	90	.	.	.
	.	.			.												.				78	68					.
OPIA1	500	C	.	.	.	.	.	.	.	.	.	.	.	.	.	.	.	0	4	1	26	20	.	90	.	.	.
	.	.			.												.				78	68					.
OPIR1	500	C	.	.	.	.	.	.	.	1	.	.	.	1	.	.	B	0	4	1	26	20	.	90	.	.	.
	.	.			.												.				78	68					.
OPNR1	500	C	.	.	.	.	.	.	.	1	.	.	.	1	.	.	.	+	6	1	26	21	.	90	.	.	.
	1100	.			.												.				78	70					.
OPPE1	500	C	.	.	.	.	.	.	.	1	.	.	.	1	.	.	.	0	4	1	26	21	.	90	.	.	.
	.	.			.												.				78	70					.
OPPF1	500	C	.	.	.	1	.	.	.	1	.	.	.	1	.	.	B	-	6	1.5	26	21	.	90	.	Y	.
	.	.			.												M				78	70					.
OPPF2	500	C	.	.	.	1	.	.	.	1	.	.	.	1	.	.	B	0	4	2	26	21	.	90	.	.	.
	.	.			.												M				78	70					.

ROOM CODE	ROOM NAME	ARCHITECTURAL MATRL+FIN FL	WAL	CLG	CLG HT	DOOR SIZE	NOISE RM	SC	STRU FLR LOAD
OPPF3	OUTPATIENT PULMO FUNCT AUTOMATED	VT	GPT	AT1	2700	900	35	50	3
		.	..	.	9-0	3-0	40		60
OPPF4	OUTPATIENT PULMO FUNCT BODY BOX	VT	GPT	AT1	2700	900	35	50	3
		.	..	.	9-0	3-0	40		60
OPPF5	OUTPATIENT PULMO FUNCT TREADMILL RM	VT	GPT	AT1	2700	900	35	50	3
		.	..	.	9-0	3-0	40		60
OPPF6	OUTPATIENT PULMO FUNCT SLEEP STUDY	CP	GPT	AT1	2600	900	20	50	3
		.	..	.	8-6	3-0	25		60
OPPM1	OUTPATIENT PACEMAKER WORKROOM	VT	GPT	AT1	2400	900	30	40	3
		.	..	.	8-0	3-0	35		60
OPPS1	OUTPATIENT PULMO FUNCT SCREENING	VT	GPT	AT1	2400	900	30	40	3
		.	..	.	8-0	3-0	35		60
OPRC1	OUTPATIENT RESPIRATORY CLEANING RM	VT	GLG	AT1	2400	900	30	40	3
		.	..	.	8-0	3-0	35		60
OPRM1	OUTPATIENT RESPIRATORY MAINTENANCE	VT	GLG	AT1	2400	900	30	40	3
		.	..	.	8-0	3-0	35		60
OPRT1	OUTPATIENT RESPIRATORY TX CUBICLES	VT	GLG	AT1	2400	900	30	40	3
		.	..	.	8-0	3-0	35		60
OPSS1	OUTPATIENT SOLAR SIMULATOR ROOM	VT	GPT	AT1	2400	900	30	40	3
		.	..	.	8-0	3-0	35		60
OPST1	OUTPATIENT STRESS TESTING ROOM	VT	GPT	AT1	2700	900	35	50	3
		.	..	.	9-0	3-0	40		60
OPSW1	OPTICAL SERVICE WORK AREA(FABRICATE	VT	GPT	AT1	2400	900	30	40	3
		.	..	.	8-0	3-0	35		60
OPTM1	OUTPATIENT TREADMILL ROOM	VT	GPT	AT1	2700	900	35	50	3
		.	.	.	9-0	3-0	40		60
OPVC1	OUTPATIENT VECTORCARDIOGRAPHY TEST	VT	GPT	AT1	2400	900	30	40	3
		.	..	.	8-0	3-0	35		60
OPVL1	OUTPATIENT VASCULAR LAB BASIC	SV	GLG	AT1	2400	1050	30	40	3
		VT	GPT	.	8-0	3-6	35		60
OPVL2	OUTPATIENT VASCULAR LAB ADVANCED	SV	GLG	AT1	2400	1050	30	40	3
		VT	GPT	.	8-0	3-6	35		60

APPENDIX A
ARCHITECTURAL AND ENGINEERING DESIGN REQUIREMENTS

ROOM CODE	ELECTRICAL LIGHT LEV	N	EM PWR PWR	LT	N	MEDICAL GASES M C A	D C A	L A	P A	M V	D H V	D L V	L D E	O X	N O	N I	N	HVAC BL	AC	OA	TEMP SM	WN	R H	FL IN	FN	E X	N
OPPF3	500	C	.	.	.	1	.	.	.	1	.	.	.	1	.	.	B	0	4	2	26	21	.	90	.	.	.
	.	.			.												M				78	70					.
OPPF4	500	C	.	.	.	1	.	.	.	1	.	.	.	1	.	.	B	0	4	2	26	21	.	90	.	.	.
	.	.			.												M				78	70					.
OPPF5	500	C	.	.	.	.	.	.	.	1	.	.	.	1	.	.	.	-	4	2	26	21	.	90	.	.	.
	.	.			.												.				78	70					.
OPPF6	100	A	.	.	.	.	.	.	.	.	.	.	.	.	.	.	.	0	4	2	26	21	.	90	.	.	.
	.	.			.												.				78	70					.
OPPM1	1100	C	.	.	.	.	.	.	.	.	.	.	.	.	.	.	.	0	4	2	26	21	.	90	.	.	.
	.	.			.												.				78	70					.
OPPS1	500	C	.	.	.	1	.	.	.	1	.	.	.	1	.	.	B	0	4	2	26	21	.	90	.	.	.
	.	.			.												.				78	70					.
OPRC1	1100	.	.	.	.	1	.	.	.	1	.	.	.	1	.	.	B	0	6	2	26	20	.	90	.	Y	M
	.	.			.												.				78	68					.
OPRM1	300	.	.	.	.	1	.	.	.	1	.	.	.	1	.	.	B	0	4	2	26	20	.	90	.	.	.
	700	.			.												.				78	68					.
OPRT1	500	C	.	.	.	1	.	.	.	1	.	.	.	1	.	.	B	0	4	2	26	21	.	90		.	.
	.	.			.												.				78	70					.
OPSS1	500	A	.	.	.	.	.	.	.	.	.	.	.	.	.	.	.	0	4	2	26	20	.	90..		.	.
	.	.			.												.				78	68					.
OPST1	500	C	.	.	.	1	.	.	.	1	.	.	.	1	.	.	B	0	4	2	26	21	.	90.		.	.
	.	.			.												.				78	70					.
OPSW1	1100	C	.	.	.	.	.	.	.	.	.	.	.	.	.	.	.	0	4	1	26	20	.	90..		.	.
	.	.			.												.				78	68					.
OPTM1	500	C	.	.	.	1	.	.	.	1	.	.	.	1	.	.	B	0	4	2	26	21	.	90	.	.	.
	.	.			.												.				78	70					.
OPVC1	500	C	.	.	.	1	.	.	.	1	.	.	.	1	.	.	B	0	4	2	26	20	.	90	.	.	.
	.	.			.												.				78	68					.
OPVL1	500	C	.	.	.	1	.	.	.	1	.	.	.	1	.	.	B	-	4	2	26	21	.	90	.	.	.
	1100	.			.												.				78	70					.
OPVL2	500	C	.	.	U	1	.	.	.	1	.	.	.	1	.	.	B	0	4	2	26	21	.	90	.	.	.
	1100	.			.												.				78	70					.

APPENDIX A
ARCHITECTURAL AND ENGINEERING DESIGN REQUIREMENTS

ROOM CODE	ROOM NAME	ARCHITECTURAL MATRL+FIN FL	WAL	CLG	CLG HT	DOOR SIZE	NOISE RM	SC	STRU FLR LOAD
ORCH1	OR CARDIAC MONITORING	SV	GLG	AT1	3000	K	30	40	3
		.	..	.	10-0		35		60
ORCM1	OPERATING ROOM CARDIAC MONITORING	ET	GCT	GLG	3000	K	30	40	3
		SV	GLG	.	10-0		35		60
ORCS1	OPERATING ROOM CYSTOSCOPIC SURGERY	ET	GCT	GLG	3000	K	30	45	3
		SV	GLG	.	10-0		35		60
ORCT1	OPERATING ROOM CARDIOTHORACIC SURG	ET	GCT	GLG	3000	K	30	45	3
		SV	GLG	.	10-0		35		60
ORCW1	OPERATING ROOM CLEAN WORK AREA	ET	GCT	GLG	2700	1050	30	45	3
		SV	GLG	.	9-0	3-6	35		60
ORDA1	OPERATING ROOM DECONTAMINATION AR.	CT	GCT	GLG	2700	1050	30	45	3
		SV	GLG	.	9-0	3-6	35		60
OREC1	OPERATING ROOM EQUIPMENT CLEANUP	VT	GCT	GLG	2700	900	30	45	3
		SV	GLG	.	9-0	3-0	35		60
ORGS1	OPERATING ROOM GENERAL SURGERY	ET	GCT	GLG	3000	K	30	45	3
		SV	GLG	.	10-0		35		60
ORHL1	OPERATING ROOM HEART LUNG PUMP ROOM	ET	GCT	GLG	3000	K	.	.	3
		SV	GLG	.	10-0		.		60
ORNE1	OPERATING ROOM NEUROSURG EQUIP STOR	SV	GLG	GLG	3000	1200	.	.	6
		.	..	.	10-0	4-0	.		125
ORNM1	OPERATING ROOM NEUROSURG MONITORING	SV	GLG	GLG	3000	K	30	45	3
		.	..	.	10-0		35		60
ORNS1	OPERATING ROOM NEUROSURGERY	ET	GCT	GLG	3000	K	30	45	3
		SV	GLG	.	10-0		35		60
OROE1	OPERATING ROOM ORTHOPEDIC EQUIP SR	SV	GLG	GLG	3000	1200	40	40	6
		.	..	.	10-0	4-0	45		125
OROP1	OPERATING ROOM OUTPATIENT SURGERY	ET	GCT	GLG	3000	K	30	45	3
		SV	GLG	.	10-0		35		60
OROS1	OPERATING ROOM ORTHOPEDIC SURGERY	ET	GCT	GLG	3000	K	30	45	3
		SV	GLG	.	10-0		35		60
ORPC1	OPERATING ROOM PLASTER CART STORAGE	SV	GLG	GLG	2700	1050	30	40	3
		.	..	.	9-0	3-6	35		60

APPENDIX A
ARCHITECTURAL AND ENGINEERING DESIGN REQUIREMENTS

ROOM CODE	ELECTRICAL LIGHT LEV	N	EM PWR PWR	LT	N	MEDICAL GASES MC	DCA	LA	PA	MV	DHV	DLV	LDE	OX	NO	NI	N	HVAC BL	AC	OA	TEMP SM	WN	RH	FL IN	FN	EX	N
ORCH1	2100	D	RA	LB	.	2	.	.	.	4	.	.	.	2	.	.	B	0	6	2	24	20	.	90	.	.	.
.	.	F			.												.				75	70					.
ORCM1	2100	D	RA	LB	.	2	.	.	.	4	.	.	.	2	.	.	B	-	6	2	24	20	.	90	.	.	.
.	.	F			.												.				75	70					.
ORCS1	2100	D	RA	LB	.	1	.	.	.	3	.	.	.	1	1	.	D	++	25	5	20	24	Y	90	90	Y	C
.	.	F			.												.				68	75					.
ORCT1	2100	D	RA	LB	.	4	.	.	.	7	.	.	.	4	2	2	D	++	25	5	20	24	Y	90	99	Y	C
.	.	F			.												F				68	75					.
ORCW1	1100	F	R	L	.	.	.	.	.	.	.	.	.	.	.	.	.	+	6	2	20	24	.	90	.	.	.
.	.	.			.												.				68	75					.
ORDA1	300	.	R	L	.	1	.	.	.	1	.	.	.	1	.	1	I	--	10	2.5	24	.	.	90	.	Y	M
.	.	.			.												.				75	.					.
OREC1	300	.	R	L	.	1	.	.	.	1	.	.	.	1	.	1	I	+	6	2	24	.	.	90	.	Y	.
.	.	.			.												.				75	.					.
ORGS1	2100	D	RA	LB	.	4	.	.	.	7	.	.	.	4	2	2	D	++	25	5	20	24	Y	90	90	.	C
.	.	F			.												F				68	75					.
ORHL1	200	.	.	LS	.	.	.	.	.	.	.	.	.	.	.	.	.	++	25	5	20	24	Y	90	99	.	C
.	.	.			.												.				68	75					.
ORNE1	200	.	.	LS	.	.	.	.	.	.	.	.	.	.	.	.	.	+	6	1.5	24	24	.	90	.	.	.
.	.	.			.												.				75	75					.
ORNM1	300	A	RA	L	.	1	.	.	.	3	.	.	.	1	.	.	B	0	6	2	26	21	.	90	.	.	.
.	.	.			.												D				78	70					.
ORNS1	2100	D	RA	LB	.	4	.	.	.	7	.	.	.	4	2	2	D	++	25	5	20	24	Y	90	99	.	C
.	.	F			.												F				68	75					.
OROE1	200	.	.	LS	.	.	.	.	.	.	.	.	.	.	.	.	.	+	6	1.5	24	24	.	90	.	.	.
.	.	.			.												.				75	75					.
OROP1	2100	D	RA	LB	.	4	.	.	.	7	.	.	.	4	2	2	D	+	25	5	20	24	Y	90	90	.	C
.	.	F			.												F				68	75					.
OROS1	2100	D	RA	LB	.	4	.	.	.	7	.	.	.	4	2	2	D	++	25	5	20	24	Y	90	99	.	C
.	.	F			.												F				68	75					.
ORPC1	50	.	.	LB	.	.	.	.	.	.	.	.	.	.	.	.	.	0	4	1	24	24	.	90	.	.	.
.	.	.			.												.				75	75					.

APPENDIX A
ARCHITECTURAL AND ENGINEERING DESIGN REQUIREMENTS

ROOM CODE	ROOM NAME	ARCHITECTURAL MATRL+FIN FL	WAL	CLG	CLG HT	DOOR SIZE	NOISE RM	SC	STRU FLR LOAD
ORPH1	OPERATING ROOM PATIENT HOLDING AREA	SV	GLG	GLG	2700	1200	30	40	3
		VT	..	.	9-0	4-0	35		60
ORPH2	OPERATING ROOM PREP/HOLD WORKSTATIO	VT	GLG	GLG	2700	1200	30	40	3
		SV	..	.	9-0	4-0	35		60
ORPP1	OPERATING ROOM PATIENT PREP/INDUCT	VT	GLG	GLG	2700	1200	30	40	3
		SV	..	.	9-0	4-0	35		60
ORSA1	OPERATING ROOM SCRUB AREA, 2 SINK	VT	GLG	GLG	2700	OPEN	30	40	3
		SV	..	.	9-0	OPEN	35		60
ORSR1	OPERATING ROOM SUBSTERILE ROOM	ET	GLG	GLG	2700	900	30	40	3
		SV	..	.	9-0	3-0	35		60
ORSS1	OPERATING ROOM STERILE STORAGE	VT	GLG	GLG	2700	900	40	40	6
		SV	..	.	9-0	3-0	45		125
OTBR1	OCC. THERAPY, BRACE/ORTHOTICS SHOP	VT	GPT	AT1	2700	1050	30	45	3
		.	..	.	9-0	3-6	35		60
OTCA1	OCC. THERAPY, COMPUTER ASSIST THER.	CP	GPT	AT1	2700	1050	30	45	3
		.	..	.	9-0	3-6	35		60
OTCL1	OCC. THERAPY, CHILD LIFE AREA	CP	GPT	AT1	2700	1050	30	45	3
		.	..	.	9-0	3-6	35		60
OTDL1	OCC. THERAPY, DAILY LIVING SKILLS	CP	GPT	AT1	2700	1050	35	45	3
		VT	..	.	9-0	3-6	40		60
OTEF1	OCC. THERAPY EXCEPTIONAL FAMILY MBR	CP	GPT	AT1	2700	900	30	45	3
		.	..	.	9-0	3-0	35		60
OTEV1	OCC. THERAPY, EVALUATION AREA	CP	GPT	AT1	2700	1050	30	45	3
		.	..	.	9-0	3-6	35		60
OTGC1	OCC. THERAPY, GENERAL CLINIC AREA	CP	GPT	AT1	2700	900	30	45	3
		.	..	.	9-0	3-0	35		60
OTPE1	OCC. THERAPY, POWER EQUIPMENT SHOP	VT	GPT	AT1	2700	900	70	50	3
		.	..	.	9-0	3-0	80		60
OTPE2	OCC. THERAPY, POWER EQUIP, MED CEN	VT	GPT	AT1	2700	900	30	40	C
		.	..	.	9-0	3-0	35		
OTSI1	OCC. THERAPY, SENSORY INTEGRATIVE D	CP	GPT	AT1	2700	900	30	40	3
		.	..	.	9-0	3-0	35		60

APPENDIX A
ARCHITECTURAL AND ENGINEERING DESIGN REQUIREMENTS

	ELECTRICAL					MEDICAL GASES											HVAC									
ROOM	LIGHT		EM PWR			M C A	D C A	L A	P A	M V	D H V	D L V	L D E	O X	N O	N I					TEMP		R H	FL		E X	
CODE	LEV	N	PWR	LT	N												N	BL	AC	OA	SM	WN		IN	FN		N
ORPH1	200	C	.	L	.	1	.	.	.	1	.	.	.	1	.	.	B	0	6	2	24	24	.	90	.	.	.
	.	.			.												.				75	75					.
ORPH2	500	C	R	L	.	1	.	.	.	1	.	.	.	1	.	.	B	0	6	2	24	24	.	90	.	.	.
	1100	.			.												.				75	75					.
ORPP1	500	C	R	L	.	1	.	.	.	1	.	.	.	1	.	.	B	-	6	2	24	24	.	90	.	Y	.
	1100	.			.												.				75	75					.
ORSA1	1100	A	.	L	.	.	.	.	.	.	.	.	.	.	.	.	.	+	6	2	24	24	.	90	.	.	.
	.	C			.												.				75	75					.
ORSR1	500	.	.	L	.	.	.	.	.	.	.	.	.	.	.	.	.	+	6	2	24	24	.	90	.	.	.
	.	.			.												.				75	75					.
ORSS1	200	.	.	LS	.	.	.	.	.	.	.	.	.	.	.	.	.	+	6	2	24	.	.	90	.	.	.
	.	.			.												.				75	24					.
OTBR1	500	C	.	.	.	.	.	1	1	.	.	.	1	.	.	.	B	0	4	2	26	20	.	.	.	.	M
	.	.			.												.				78	68					.
OTCA1	500	C	.	.	.	.	.	.	.	.	.	.	.	.	.	.	.	0	4	2	26	20	.	.	.	.	M
	.	.			.												.				78	68					.
OTCL1	500	C	.	.	.	.	.	.	.	.	.	.	.	.	.	.	.	0	4	2	26	20	.	.	.	.	.
	.	.			.												.				78	68					.
OTDL1	500	C	.	.	.	.	.	.	.	.	.	.	.	.	.	.	.	-	4	2	26	20	.	.	.	.	.
	.	.			.												.				78	68					.
OTEF1	500	C	.	.	.	.	.	.	.	.	.	.	.	.	.	.	.	-	4	2	26	20	.	.	.	.	.
	.	.			.												.				78	68					.
OTEV1	500	C	.	.	.	.	.	.	.	.	.	.	.	.	.	.	.	0	4	2	26	20	.	.	.	.	.
	.	.			.												.				78	68					.
OTGC1	500	C	.	.	.	.	.	.	.	.	.	.	.	.	.	.	.	0	4	1	26	20	.	.	.	.	.
	.	.			.												.				78	68					.
OTPE1	500	C	.	.	.	.	.	.	1	.	.	.	.	.	.	.	.	0	6	1.5	26	20	.	.	.	.	.
	700	.			.												.				78	68					.
OTPE2	500	C	.	.	.	.	.	.	1	.	.	.	.	.	.	.	.	0	4	1	26	20	.	.	.	.	.
	700	.			.												.				78	68					.
OTSI1	500	C	.	.	.	.	.	.	.	.	.	.	.	.	.	.	.	0	4	1	26	20	.	.	.	.	.
	.	.			.												.				78	68					.

APPENDIX A
ARCHITECTURAL AND ENGINEERING DESIGN REQUIREMENTS

ROOM CODE	ROOM NAME	ARCHITECTURAL MATRL+FIN FL	WAL	CLG	CLG HT	DOOR SIZE	NOISE RM	SC	STRU FLR LOAD
OTWT1	OCC. THERAPY, WORK THERAPY AREA	CP	GPT	AT1	2700	900	30	45	3
		VT	..	.	9-0	3-0	35		60
PAIA1	PATIENT ADMIN INTERVIEW AREA	CP	GPT	AT1	2400	900	30	40	3
		.	..	.	8-0	3-0	35		60
PARS1	MED RECORDS STORAGE, FIXED AISLES	VT	GPT	AT1	2700	900	30	40	5
		.	..	.	9-0	3-0	35		100
PARS2	MED RECORDS STORAGE, MOVABLE AISLE	VT	GPT	AT1	2700	900	30	40	5
		.	..	.	9-0	3-0	35		100
PART1	MED RECORDS TRANSCRIPTION AREA	CP	GPT	AT1	2700	900	30	40	5
		.	..	.	9-0	3-0	35		100
PART2	MED RECORDS TRANSCRIPTION EQUIP	VT	GPT	AT1	2700	900	30	40	5
		.	..	.	9-0	3-0	35		100
PARW1	MED RECORDS WORKROOM, DICTATE	CP	GPT	AT1	2700	900	30	40	5
		.	..	.	9-0	3-0	35		100
PARW2	MED RECORDS WORKROOM, CARRELS	CP	GPT	AT1	2700	900	30	40	5
		.	..	.	9-0	3-0	35		100
PEHS1	PHYSICAL EVAL HEARING SCREEN 1 MAN	CP	GAF	AT1	2700	900	30	45	3
		VT	GPT	.	9-0	3-0	35		60
PEHS2	PHYSICAL EVAL HEARING SCREEN 4 MAN	CP	GAF	AT1	2700	900	30	45	3
		VT	GPT	.	9-0	3-0	35		60
PEHS3	PHYSICAL EVAL HEARING SCREEN 6 MAN	CP	GAF	AT1	2700	900	30	45	3
		VT	GPT	.	9-0	3-0	35		60
PEHS4	PHYSICAL EVAL HEARING SUITE(2 ROOM)	CP	GAF	AT1	2700	900	30	45	3
		VT	GPT	.	9-0	3-0	35		60
PEHS6	PHYSICAL EVAL PEDS HEARING/VISION S	CP	GAF	AT1	2400	900	30	45	3
		VT	GPT	.	8-0	3-0	35		60
PEHW1	PHYSICAL EVAL HEIGHT AND WEIGHT	VT	GPT	AT1	2400	900	35	40	3
		.	..	.	8-0	3-0	40		60
PEVH2	PHYSICAL EVAL VISION/HEARING PEDS	VT	GPT	AT1	2400	900	30	40	3
		.	..	.	8-0	3-0	35		60
PEVS1	PHYSICAL EVAL VISION SCREENING	VT	GPT	AT1	2400	900	30	40	3
		.	..	.	8-0	3-0	35		60

APPENDIX A
ARCHITECTURAL AND ENGINEERING DESIGN REQUIREMENTS

ROOM CODE	ELECTRICAL LIGHT LEV	N	EM PWR PWR	LT	N	MEDICAL GASES MCA	DCA	LA	PA	MV	DHV	DLV	LDE	OX	NO	NI	N	HVAC BL	AC	OA	TEMP SM	WN	RH	FL IN	FN	EX	N
OTWT1	500	C	.	.	.	.	.	.	.	.	.	.	.	.	.	.	.	0	6	2	26	20	.	.	.	.	.
	.	.			.												.				78	68					.
PAIA1	500	.	.	.	.	.	.	.	.	.	.	.	.	.	.	.	.	0	4	1	26	20	.	.	.	.	.
	.	.			.												.				78	68					.
PARS1	300	.	.	LE	.	.	.	.	.	.	.	.	.	.	.	.	.	0	4	1	26	20	.	.	.	.	.
	.	.			.												.				78	68					.
PARS2	300	.	.	LE	.	.	.	.	.	.	.	.	.	.	.	.	.	0	4	1	26	20	.	.	.	.	.
	.	.			.												.				78	68					.
PART1	700	.	.	LE	.	.	.	.	.	.	.	.	.	.	.	.	.	0	4	1	26	20	.	.	.	.	.
	.	.			.												.				78	68					.
PART2	200	.	.	LE	.	.	.	.	.	.	.	.	.	.	.	.	.	0	4	1	26	20	.	.	.	.	.
	.	.			.												.				78	68					.
PARW1	300	.	.	LE	.	.	.	.	.	.	.	.	.	.	.	.	.	0	4	1	26	20	.	.	.	.	.
	.	.			.												.				78	68					.
PARW2	300	.	.	LE	E	.	.	.	.	.	.	.	.	.	.	.	.	0	4	1	26	20	.	.	.	.	.
	.	.			.												.				78	68					.
PEHS1	500	C	.	.	.	.	.	.	.	.	.	.	.	.	.	.	.	0	4	1	26	20	.	.	.	.	.
	.	.			.												.				78	68					.
PEHS2	500	C	.	.	.	.	.	.	.	.	.	.	.	.	.	.	.	0	4	1	26	20	.	.	.	.	.
	.	.			.												.				78	68					.
PEHS3	500	C	.	.	.	.	.	.	.	.	.	.	.	.	.	.	.	0	4	1	26	20	.	.	.	.	.
	.	.			.												.				78	68					.
PEHS4	500	C	.	.	.	.	.	.	.	.	.	.	.	.	.	.	.	0	4	1	26	20	.	.	.	.	.
	.	.			.												.				78	68					.
PEHS6	500	C	.	LE	.	.	.	.	.	.	.	.	.	.	.	.	.	0	4	1	26	20	.	.	.	.	.
	.	.			.												.				78	68					.
PEHW1	500	C	.	.	.	.	.	.	.	.	.	.	.	.	.	.	.	0	4	1	26	20	.	.	.	.	.
	.	.			.												.				78	68					.
PEVH2	500	C	.	.	.	.	.	.	.	.	.	.	.	.	.	.	.	0	4	1	26	20	.	.	.	.	.
	.	.			.												.				78	68					.
PEVS1	500	C	.	.	.	.	.	.	.	.	.	.	.	.	.	.	.	0	4	1	26	20	.	.	.	.	.
	.	.			.												.				78	68					.

APPENDIX A
ARCHITECTURAL AND ENGINEERING DESIGN REQUIREMENTS

ROOM CODE	ROOM NAME	ARCHITECTURAL MATRL+FIN FL	WAL	CLG	CLG HT	DOOR SIZE	NOISE RM	SC	STRU FLR LOAD
PEWM1	PHYSICAL EVAL WEIGHTS AND MEASURES	VT	GPT	AT1	2400	900	35	40	3
		.	..	.	8-0	3-0	40		60
PEWM2	PHYSICAL EVAL WEIGHTS AND MEASURES	VT	GPT	AT1	2400	900	35	40	3
		.	..	.	8-0	3-0	40		60
PEWM4	PHYSICAL EVAL WEIGHTS&MEA. PED 2 ST	VT	GPT	AT1	2400	900	35	40	3
		.	..	.	8-0	3-0	40		60
PHIV1	PHARMACY IV ADMIXTURE CENTER	VT	GLG	AT2	2700	900	35	40	3
		SV	..	.	9-0	3-0	40		60
PHIV2	PHARMACY IV ADMIXTURE W/CLASS B HD	VT	GLG	AT2	2700	900	35	40	3
		SV	..	.	9-0	3-0	40		60
PHIV3	PHARMACY IV ADMIXTURE SATELLITE	VT	GLG	AT2	2700	900	35	40	3
		SV	..	.	9-0	3-0	40		60
PHIV4	PHARMACY IV ADMIXTURE SATE. W/B HD	VT	GLG	AT2	2700	900	35	40	3
		SV	..	.	9-0	3-0	40		60
PHMP1	PHARMACY MANUFACTURING & PREPACK	VT	GLG	AT2	2700	900	35	40	5
		.	..	.	9-0	3-0	40		100
PHOD1	PHARMACY OUTPATIENT DISPENSING MAIN	CP	GLG	AT1	2700	1050	35	40	5
		VT	GPT	.	9-0	3-6	40		100
PHOD2	PHARMACY OUTPATIENT DISP. SATELLITE	CP	GLG	AT1	2700	1050	35	40	5
		VT	GPT	.	9-0	3-6	40		100
PHUD1	PHARMACY UNIT DOSE CENTER	SV	GLG	AT2	2700	900	35	40	3
		VT	GPT	.	9-0	3-0	40		60
PHUD2	PHARAMCY UNIT DOSE SATELLITE	SV	GLG	AT1	2700	900	35	40	3
		VT	GPT	.	9-0	3-0	40		60
PLAY1	PLAYROOM, PEDIATRICS	CP	GVF	AT1	2700	1200	35	45	3
		.	GPT	.	9-0	4-0	40		60
PLAY2	PLAYROOM, ADOLESCENT LOUNGE	CP	GVF	AT1	2700	1200	35	45	3
		.	GPT	.	9-0	4-0	40		60
PMCW1	PLANT MAINTENANCE, COMMON WORK AREA	VT	GPT	AT1	2700	SP	35	50	5
		GS	..	.	9-0	SP	40		100
PMDR1	PLANT MAINTENANCE, DRAFTING ROOM	CP	GPT	AT1	2700	900	35	40	3
		VT	..	.	9-0	3-0	40		60

APPENDIX A
ARCHITECTURAL AND ENGINEERING DESIGN REQUIREMENTS

ROOM CODE	ELECTRICAL LIGHT LEV	N	EM PWR PWR	LT	N	MEDICAL GASES MCA	DCA	LA	PA	MV	DHV	DLV	LDE	OX	NO	NI	N	HVAC BL	AC	OA	TEMP SM	WN	RH	FL IN	FN	EX	N
PEWM1	300	C	.	.	.	.	.	.	.	.	.	.	.	.	.	.	.	0	4	1	26	20	.	.	.	.	.
	.	.			.												.				78	68					.
PEWM2	300	C	.	.	.	.	.	.	.	.	.	.	.	.	.	.	.	0	4	1	26	20	.	.	.	.	.
	.	.			.												.				78	68					.
PEWM4	300	C	.	.	.	.	.	.	.	.	.	.	.	.	.	.	.	0	4	1	26	20	.	.	.	.	.
	.	.			.												.				78	68					.
PHIV1	1100	F	R	L	.	.	.	1	.	1	.	.	.	.	.	.	B	+	4	2	26	20	.			.	.
	.	.			.												.				78	68					.
PHIV2	1100	F	R	L	.	.	.	1	.	1	.	.	.	.	.	.	B	+	4	2	26	20	.		.	.	.
	.	.			.												.				78	68					.
PHIV3	1100	F	R	L	.	.	.	1	.	1	.	.	.	.	.	.	B	+	4	2	26	20	.	.	.	.	.
	.	.			.												.				78	68					.
PHIV4	1100	F	R	L	.	.	.	1	.	1	.	.	.	.	.	.	B	+	4	2	26	20	.	.	.	.	.
	.	.			.												.				78	68					.
PHMP1	1100	F	R	L	.	.	.	1	.	1	.	.	.	.	.	.	B	+	4	2	26	20	.	.	.	.	.
	.	.			.												.				78	68					.
PHOD1	1100	F	R	L	.	.	.	.	.	.	.	.	.	.	.	.	.	+	4	2	26	20	.	.	.	.	.
	.	.			.												.				78	68					.
PHOD2	1100	F	R	L	.	.	.	.	.	.	.	.	.	.	.	.	.	+	4	2	26	20	.	.	.	.	.
	.	.			.												.				78	68					.
PHUD1	1100	F	R	L	.	.	.	1	.	1	.	.	.	.	.	.	B	+	4	2	26	20	.	.	.	.	.
	.	.			.												.				78	68					.
PHUD2	1100	F	R	L	.	.	.	1	.	1	.	.	.	.	.	.	B	+	4	2	26	20	.	.	.	.	.
	.	.			.												.				78	68					
PLAY1	300	.	.	.	.	.	.	.	.	1	.	.	.	1	.	.	A	0	6	1.5	26	21	.	.	.	.	.
	.	.			.												.				78	70					.
PLAY2	300	.	.	.	.	.	.	.	.	1	.	.	.	1	.	.	A	0	6	1.5	26	21	.	.	.	.	.
	.	.			.												.				78	70					.
PMCW1	300	.	.	.	.	.	.	.	1	.	.	.	.	.	.	.	.	0	6	1	26	21	.	.	.	Y	M
	700	.			.												.				78	70					.
PMDR1	500	.	.	.	.	.	.	.	.	.	.	.	.	.	.	.	.	0	4	1	26	20	.	.	.	.	.
	1100	.			.												.				78	68					.

ROOM CODE	ROOM NAME	ARCHITECTURAL MATRL+FIN FL	WAL	CLG	CLG HT	DOOR SIZE	NOISE RM	SC	STRU FLR LOAD
PMWS1	PLANT MAINTENANCE, WORKSTATION	VT	GPT	AT1	2700	900	35	50	5
		CP	..	.	9-0	3-0	40		100
PTAT1	PHYS THERAPY AMPUTEE TRAINING AREA	VT	GLG	AT2	2700	900	35	40	3
		CP	GPT	.	9-0	3-0	40		60
PTBT1	PHYS THERAPY BACK THERAPY PROGRAM	CP	GLG	AT2	2700	900	35	40	3
		.	GPT	.	9-0	3-0	40		60
PTCB1	PHYS THERAPY CONTRAST BATH STA	SV	GLG	AT2	2700	900	35	40	C
		.	GPT	.	9-0	3-0	40		C
PTCW1	PHYS THERAPY CUBICLE WORKSTATION	VT	GLG	AT2	2700	900	35	40	3
		.	GPT	.	9-0	3-0	40		60
PTEA1	PHYS THERAPY EXERCISE AREA - GYM	VT	GLG	AT2	2700	900	35	40	3
		.	GPT	.	9-0	3-0	40		60
PTEM1	PHYS THERAPY ELECTROMYOGRAPHY (EMG)	VT	GLG	AT2	2700	900	35	40	3
		.	GPT	.	9-0	3-0	40		60
PTEM2	PHYS THERAPY ELECTROMYOGRAPHY WORK	VT	GLG	AT1	2700	900	35	40	3
		.	GPT	.	9-0	3-0	40		60
PTES1	PHYS THERAPY EXERCISE STATION	VT	GLG	AT2	2700	900	35	40	3
		.	GPT	.	9-0	3-0	40		60
PTEW1	PHYS THERAPY EXTREM WHIRLP ARM/LEG	QT	GLG	AT2	2700	900	35	40	C
		CT	CT	.	9-0	3-0	40		C
PTEW2	PHYS THERAPY EXTREM WHIRLP ARM	QT	GLG	AT2	2700	900	35	40	C
		CT	CT	.	9-0	3-0	40		C
PTGL1	PHYS THERAPY GAIT OBS. LANE	SV	GLG	AT2	2700	900	35	40	3
		CT	CT	.	9-0	3-0	40		60
PTGT1	PHYS THERAPY GAIT TANK ROOM	SV	GLG	AT2	2700	900	35	40	C
		CT	CT	.	9-0	3-0	40		C
PTIS1	PHYS THERAPY ISOKINETIC STA - DIAG	VT	GLG	AT2	2700	900	35	40	C
		.	GPT	.	9-0	3-0	40		C
PTIS2	PHYS THERAPY ISOKINETIC STA - EXER	VT	GLG	AT2	2700	900	35	40	3
		.	GPT	.	9-0	3-0	40		60
PTLD1	PHYS THERAPY LINEN AND DRYING AREA	SV	GLG	AT2	2700	900	35	40	3
		VT	..	.	9-0	3-0	40		60

APPENDIX A
ARCHITECTURAL AND ENGINEERING DESIGN REQUIREMENTS

ROOM CODE	ELECTRICAL LIGHT LEV	N	EM PWR PWR	LT	N	MEDICAL GASES MCA	DCA	LA	PA	MV	DHV	DLV	LDE	OX	NO	NI	N	HVAC BL	AC	OA	TEMP SM	WN	RH	FL IN	FN	EX	N
PMWS1	300	.	.	.	.	.	.	.	1	.	.	.	.	.	.	.	.	0	4	1	26	20	.	.	.	.	.
	700	.			.												.				78	68					.
PTAT1	500	.	.	.	.	.	.	.	1	.	.	.	1	.	.	B	0	6	2		26	21	.	.	.	.	.
	.	.			.											.					78	70					.
PTBT1	500	.	.	.	.	.	.	.	.	.	.	.	.	.	.	.	0	6	2		26	21	.	.	.	.	.
	.	.			.											.					78	70					.
PTCB1	500	.	.	.	.	.	.	.	.	.	.	.	.	.	.	.	-	6	2		26	21	.	.	.	Y	.
	.	.			.											.					78	70					.
PTCW1	500	.	.	.	.	.	.	.	1	.	.	.	1	.	.	B	0	4	2		26	21	.	.	.	.	.
	.	.			.											.					78	70					.
PTEA1	300	.	.	.	.	.	.	.	1	.	.	.	1	.	.	B	-	6	2		26	21	.	.	.	Y	.
	.	.			.											.					78	70					.
PTEM1	500	.	.	.	.	.	.	.	1	.	.	.	1	.	.	B	0	6	2		26	21	.	.	.	.	.
	.	.			.											.					78	70					.
PTEM2	500	.	.	.	.	.	.	.	1	.	.	.	1	.	.	B	0	6	2		26	21	.	.	.	Y	.
	.	.			.											.					78	70					.
PTES1	300	.	.	.	.	.	.	.	1	.	.	.	1	.	.	B	-	6	2		26	21	.	.	.	.	.
	.	.			.											.					78	70					.
PTEW1	200	.	.	.	.	.	.	.	1	.	.	.	1	.	.	B	-	6	2		26	21	.	.	.	Y	.
	.	.			.											.					78	70					.
PTEW2	200	.	.	.	.	.	.	.	1	.	.	.	1	.	.	B	-	6	2		26	21	.	.	.	Y	.
	.	.			.											.					78	70					.
PTGL1	500	.	.	.	.	.	.	.	.	.	.	.	.	.	.	.	0	6	2		26	21	.	.	.	.	.
	.	.			.											.					78	70					.
PTGT1	200	.	.	.	.	.	.	.	.	.	.	.	.	.	.	.	-	6	2		26	21	.	.	.	Y	.
	.	.			.											.					78	70					.
PTIS1	300	.	.	.	.	.	.	.	1	.	.	.	1	.	.	B	-	6	2		26	21	.	.	.	Y	.
	.	.			.											.					78	70					.
PTIS2	500	.	.	.	.	.	.	.	1	.	.	.	1	.	.	B	0	6	2		26	21	.	.	.	.	.
	.	.			.											.					78	70					.
PTLD1	200	.	.	.	.	.	.	.	.	.	.	.	.	.	.	.	-	6	2		26	21	.	.	.	Y	.
	.	.			.											.					78	70					.

ROOM CODE	ROOM NAME	ARCHITECTURAL MATRL+FIN FL	WAL	CLG	CLG HT	DOOR SIZE	NOISE RM	SC	STRU FLR LOAD
PTLW1	PHYS THERAPY LOWBOY WHIRLPOOL	SV	GLG	AT2	2700	900	35	40	C
		.	..	.	9-0	3-0	40		C
PTPR1	PHYS THERAPY PEDIATRIC REHAB	CP	GLG	AT2	2700	900	35	40	3
		VT	GPT	.	9-0	3-0	40		60
PTTC1	PHYS THERAPY TREATMENT CUBICLE	VT	GLG	AT2	2700	900	35	40	3
		GP	GPT	.	9-0	3-0	40		60
PTTP1	PHYS THERAPY THERAPEUTIC POOL	CT	GLG	SSP	2700	900	35	40	C
		QT	CT	.	9-0	3-0	40		C
PTUC1	PHYS THERAPY ULTRASOUND CUBICLE	VT	GLG	AT2	2700	900	35	40	3
		.	..	.	9-0	3-0	40		60
PTWB1	PHYS THERAPY WHOLE BODY TANK	CT	GLG	AT2	2700	900	35	40	3
		QT	CT	.	9-0	3-0	40		60
PTWT1	PHYS THERAPY WHIRLPOOL TX CUBICLE	CT	GLG	AT2	2700	900	35	40	C
		QT	CT	.	9-0	3-0	40		
PTWW1	PHYS THERAPY WHIRLPOOL WORKSTATION	CT	GLG	AT2	2700	900	35	40	C
		QT	CT	..	9-0	3-0	40		
PWST1	PHYS THERAPY WHIRLPOOL TRMT	CT	GLG	AT2	2700	900	35	40	C
		.	CT	.	9-0	3-0	40		C
RAA01	CHAPEL ALTAR	CP	GVF	AT1	2700	OPEN	20	40	3
		.	SP	SP	9-0	OPEN	25		60
RABS1	RELIGIOUS ACTIVITY BLESED SACRAMENT	CP	GVF	AT1	2700	900	20	40	3
		.	SP	SP	9-0	3-0	25		60
RAMR1	RELIGIOUS ACTIVITY MEDITATION ROOM	CP	GVF	AT1	2700	900	20	40	3
		.	GWP	.	9-0	3-0	25		60
RARR1	RELIGIOUS ACTIVITY RECONCILATION RM	CP	GVF	AT1	2700	900	20	40	3
		.	GWP	.	9-0	3-0	25		60
RAS01	CHAPEL SEATING AREA, FIXED SEATS	CP	GVF	AT1	VAR	OPEN	20	40	3
		.	GWP	.	VAR	OPEN	25		60
RASR1	CHAPEL, SACRISTY/STORAGE	CP	GPT	AT1	2700	900	30	40	6
		VT	..	.	9-0	3-0	35		125
RCA01	RESUSCITATION CART ALCOVE	VT	GLG	AT1	2400	OPEN	35	40	3
		.	..	.	8-0	OPEN	40		60

APPENDIX A
ARCHITECTURAL AND ENGINEERING DESIGN REQUIREMENTS

ROOM CODE	ELECTRICAL LIGHT LEV	N	EM PWR PWR	LT	N	MEDICAL GASES MC	DCA	LA	PA	MV	DHV	DLV	LDE	OX	NO	NI	N	HVAC BL	AC	OA	TEMP SM	WN	RH	FL IN	FN	EX	N
PTLW1	200	.	.	.	.	.	.	.	.	1	.	.	.	1	.	.	B	-	6	2	26	21	.	.	.	Y	.
	.	.			.												.				78	70					.
PTPR1	500	.	.	.	.	.	.	.	.	1	.	.	.	1	.	.	B	0	6	2	26	21	.	.	.	.	.
	.	.			.												.				78	70					.
PTTC1	500	.	.	.	.	1	.	.	.	1	.	.	.	1	.	.	.	0	4	2	26	21	.	.	.	.	.
	.	.			.												.				78	70					.
PTTP1	200	.	.	.	.	1	.	.	.	1	.	.	.	1	.	.	B	-	6	2	26	21	.	.	.	Y	.
	.	.			.												.				78	70					.
PTUC1	500	.	.	.	.	1	.	.	.	1	.	.	.	1	.	.	B	0	6	2	26	21	.	.	.	.	.
	.	.			.												.				78	70					.
PTWB1	500	.	.	.	.	1	.	.	.	1	.	.	.	1	.	.	B	0	6	2	26	21	.	.	.	.	.
	.	.			.												.				78	70					.
PTWT1	500	.	.	.	.	.	.	.	.	1	.	.	.	1	.	.	B	-	6	2	26	21	.	.	.	.	.
	.	.			.												.				78	70					.
PTWW1	500	.	.	.	.	.	.	.	.	1	.	.	.	1	.	.	B	-	6	2	26	21	.	.	.	.	.
	.	.			.												.				78	70					.
PWST1	200	.	.	.	.	.	.	.	.	1	.	.	.	1	.	.	.	-	6	2	26	21	.	.	.	Y	.
	.	.			.												.				78	70					.
RAA01	300	A	.	.	.	.	.	.	.	.	.	.	.	.	.	.	.	0	4	2	26	20	.	.	.	.	.
	.	.			.												.				78	68					.
RABS1	300	A	.	.	.	.	.	.	.	.	.	.	.	.	.	.	.	0	4	2	26	20	.	.	.	.	.
	.	.			.												.				78	68					.
RAMR1	300	A	.	.	.	.	.	.	.	.	.	.	.	.	.	.	.	0	4	2	26	20	.	.	.	.	.
	.	.			.												.				78	68					.
RARR1	300	A	.	.	.	.	.	.	.	.	.	.	.	.	.	.	.	0	4	2	26	20	.	.	.	.	.
	.	.			.												.				78	68					.
RAS01	150	A	.	LE	.	.	.	.	.	.	.	.	.	.	.	.	.	0	4	2	26	20	.	.	.	.	.
	.	.			.												.				78	68					.
RASR1	100	.	.	.	.	.	.	.	.	.	.	.	.	.	.	.	.	0	4	2	26	20	.	.	.	.	.
	.	.			.												.				78	68					.
RCA01	150	.	R	.	.	.	.	.	.	.	.	.	.	.	.	.	.	0	.	.	.	.	.	.	.	.	K
	.	.			.												.				.	.					.

APPENDIX A
ARCHITECTURAL AND ENGINEERING DESIGN REQUIREMENTS

ROOM CODE	ROOM NAME	ARCHITECTURAL MATRL+FIN FL	WAL	CLG	CLG HT	DOOR SIZE	NOISE RM	SC	STRU FLR LOAD
RDB01	RENAL DIALYSIS BED STATION COIL	VT	GLG	AT2	2600	1200	30	40	3
		SV	..	.	8-6	4-0	35		60
RDB02	RENAL DIALYSIS BED STATION NEG PRES	VT	GLG	AT2	2600	1200	30	40	3
		SV	..	.	8-6	4-0	35		60
RDB03	RENAL DIALYSIS BED STATION COMBO	VT	GLG	AT2	2600	1200	30	40	3
		SV	..	.	8-6	4-0	35		60
RDC01	RENAL DIALYSIS CHAIR STATION COIL	VT	GLG	AT2	2600	1200	30	40	3
		SV	..	.	8-6	4-0	35		60
RDC02	RENAL DIALYSIS CHAIR STATION NEG PR	VT	GLG	AT2	2600	1200	30	40	3
		SV	..	.	8-6	4-0	35		60
RDC03	RENAL DIALYSIS CHAIR STATION COMBO	VT	GLG	AT2	2600	1200	30	40	3
		SV	..	.	8-6	4-0	35		60
RDP01	RENAL DIALYSIS PORTABLE STATION	VT	GLG	AT2	2600	1200	30	40	3
		SV	..	.	8-6	4-0	35		60
RDPD1	RENAL DIALYSIS PERITONEAL STATION	VT	GLG	AT2	2600	1200	30	40	3
		SV	..	.	8-6	4-0	35		60
RDSM1	RENAL DIALYSIS SOLUTE MAKEUP BATCH	VT	GLG	AT2	2600	1200	30	40	3
		SV	..	.	8-6	4-0	35		60
RDSM2	RENAL DIALYSIS SOLUTE MAKEUP CENTRL	VT	GLG	AT2	2600	1200	30	40	3
		SV	..	.	8-6	4-0	35		60
RECP1	RECEPTION/CONTROL OUTPATIENT	CP	GVF	AT1	2700	900	35	40	3
		.	GPT	.	9-0	3-0	40		60
RECP2	RECEPTION/CLERICAL CLINIC	CP	GVF	AT1	2700	900	35	40	3
		.	GPT	.	9-0	3-0	40		60
RECP3	RECEPTION/INFORMATION DESK	CP	GVF	AT1	VAR	OPEN	35	40	3
		QT	GPT	.	VAR	OPEN	40		60
RPR01	REPRODUCTION ROOM, STANDARD	CP	GPT	AT1	2400	900	35	50	5
		VT	..	.	8-0	3-0	40		100
RPR02	REPRODUCTION ROOM, HIGH VOLUME	CP	GPT	AT1	2400	900	35	50	7.5
		VT	..	.	8-0	3-0	40		150
RRBD1	RECOVERY ROOM BLOOD DONORS	CP	GVF	AT1	2400	900	30	40	3
		VT	GPT	.	8-0	3-0	35		60

APPENDIX A
ARCHITECTURAL AND ENGINEERING DESIGN REQUIREMENTS

ROOM CODE	ELECTRICAL LIGHT LEV	N	EM PWR PWR	LT	N	MEDICAL GASES MC A	DC A	LA	PA	MV	DHV	DLV	LDE	OX	NO	NI	N	HVAC BL	AC	OA	TEMP SM	WN	RH	FL IN	FN	EX	N
RDB01	500	C	R	L	.	2	.	.	.	1	.	.	.	1	.	.	B	+	6	2	26	21	.	90	.	.	.
	1100	.			.												.				78	70					.
RDB02	500	C	R	L	.	2	.	.	.	1	.	.	.	1	.	.	B	+	6	2	26	21	.	90	.	.	.
	1100	.			.												.				78	70					.
RDB03	500	C	R	L	.	2	.	.	.	1	.	.	.	1	.	.	B	+	6	2	26	21	.	90	.		
	1100	.			.												.				78	70					
RDC01	500	C	R	L	.	2	.	.	.	1	.	.	.	1	.	.	B	+	6	2	26	21	.	90	.	.	.
	1100	.			.												.				78	70					.
RDC02	500	C	R	L	.	2	.	.	.	1	.	.	.	1	.	.	B	+	6	2	26	21	.	90	.	.	.
	1100	.			.												.				78	70					.
RDC03	500	C	R	L	.	2	.	.	.	1	.	.	.	1	.	.	B	+	6	2	26	21	.	90	.	.	.
	1100	.			.												.				78	70					.
RDP01	500	C	R	L	.	2	.	.	.	1	.	.	.	1	.	.	B	+	6	2	26	21	.	90	.	.	.
	1100	.			.												.				78	70					.
RDPD1	500	C	R	L	.	2	.	.	.	1	.	.	.	1	.	.	B	+	6	2	26	21	.	90	.	.	.
	1100	.			.												.				78	70					.
RDSM1	1100	C	R	L	.	2	.	.	.	1	.	.	.	1	.	.	B	+	6	2	26	21	.	90	.	.	.
	.	.			.												.				78	70					.
RDSM2	1100	C	R	L	.	2	.	.	.	1	.	.	.	1	.	.	B	+	6	2	26	21	.	90	.	.	.
	.	.			.												.				78	70					.
RECP1	300	.	.	.	.	.	.	.	.	.	.	.	.	.	.	.	.	0	4	1	26	21	.	90	.	.	.
	500	.			.												.				78	70					.
RECP2	300	.	.	.	.	.	.	.	.	.	.	.	.	.	.	.	.	0	4	1	26	21	.	90	.	.	.
	500	.			.												.				78	70					.
RECP3	300	.	.	.	.	.	.	.	.	.	.	.	.	.	.	.	.	0	4	1	26	21	.	90	.	.	.
	500	.			.												.				78	70					.
RPR01	500	.	.	.	.	.	.	.	.	.	.	.	.	.	.	.	.	0	10	2	26	21	.	.	.	.	.
	.	.			.												.				78	70					.
RPR02	700	.	.	.	.	.	.	.	.	.	.	.	.	.	.	.	.	0	10	2	26	21	.	.	.	.	.
	.	.			.												.				78	70					.
RRBD1	300	C	.	LS	.	1	.	.	.	3	.	.	.	1	.	.	B	0	4	2	26	21	.	.	.	.	.
	.	.			.												.				78	70					.

APPENDIX A
ARCHITECTURAL AND ENGINEERING DESIGN REQUIREMENTS

ROOM CODE	ROOM NAME	ARCHITECTURAL MATRL+FIN FL	WAL	CLG	CLG HT	DOOR SIZE	NOISE RM	SC	STRU FLR LOAD
RRIA1	RECOVERY ROOM ISOLATION ANTEROOM	SV	GLG	AT2	2400	1200	30	40	3
		.	..	.	8-0	4-0	35		60
RRIR1	RECOVERY ROOM ISOLATION RECOVERY RM	SV	GLG	AT2	2700	1200	30	40	3
		.	..	.	9-0	4-0	35		60
RRLD1	RECOVERY ROOM LABOR & DELIVERY	SV	GLG	AT2	2700	1200	30	40	3
		.	..	.	9-0	4-0	35		60
RROP1	RECOVERY ROOM OUTPATIENT	SV	GLG	AT2	2700	1200	30	40	3
		.	..	.	9-0	4-0	35		60
RROP2	RECOVERY ROOM OUTPATIENT SEATED REC	SV	GLG	AT2	2700	1200	30	40	3
		.	..	.	9-0	4-0	35		60
RRSS1	RECOVERY ROOM SURG SUITE INPATIENT	SV	GLG	AT2	2700	1200	30	40	3
		.	..	.	9-0	4-0	35		60
RRSS2	RECOVERY ROOM SURG SUITE OUTPATIENT	SV	GLG	AT2	2700	1200	30	40	3
		.	..	.	9-0	4-0	35		60
RRSS3	RECOVERY ROOM OUTPATIENT SEATED SDU	SV	GLG	AT2	2700	1200	30	40	3
		.	..	.	9-0	4-0	35		60
SEC01	SECRETARY, EXECUTIVE OFFICES	CP	GVF	AT1	2400	900	30	40	3
		.	GPT	.	8-0	3-0	35		60
SEC02	SECRETARY, GENERAL USE	CP	GPT	AT1	2400	900	30	40	3
		.	..	.	8-0	3-0	35		60
SHR01	SHOWER AREA	CT	GCT	GLG	VAR	900	35	45	3
		PF	SPF	SPF	VAR	3-0	40		60
SHR02	SHOWER, WHEELCHAIR	CT	GCT	GLG	VAR	900	35	45	3
		PF	SPF	SPF	VAR	3-0	40		60
SL001	STAFF LOUNGE	CP	GVF	AT1	2400	900	35	45	3
		VT	GPT	.	8-0	3-0	40		60
SRCH1	STORAGE RM, CHARGING, BATTERY/EQUIP	CS	GPT	GPT	2400	900	35	40	10
		CT	..	.	8-0	3-0	40		200
SRCS1	STORAGE RM, CRUTCH AND SPLINT	VT	GPT	GPT	2700	900	35	40	6
		.	..	.	9-0	3-0	40		125
SRE01	STORAGE RM, EQUIPMENT	VT	GPT	GPT	2700	E	40	40	6
		.	..	.	9-0		45		125

APPENDIX A
ARCHITECTURAL AND ENGINEERING DESIGN REQUIREMENTS

ROOM CODE	ELECTRICAL LIGHT LEV	N	EM PWR PWR	LT	N	MEDICAL GASES MC	DCA	LA	PA	MV	DHV	DLV	LDE	OX	NO	NI	N	HVAC BL	AC	OA	TEMP SM	WN	RH	FL IN	FN	EX	N
RRIA1	300	.	.	.	.	.	.	.	.	.	.	.	.	.	.	.	.	-	6	2	24	.	.	90	.	Y	.
	.	.			.												.				75	.					.
RRIR1	300	B	R	L	.	1	.	.	.	3	.	.	.	1	.	.	B	+	6	2	24	.	Y	90	.	Y	O
	1100	.			.												.				75	.					.
RRLD1	300	B	R	L	.	1	.	.	.	3	.	.	.	1	.	.	B	+	6	2	24	.	Y	90	.	Y	O
	1100	.			.												.				75	.					.
RROP1	300	B	R	L	.	1	.	.	.	3	.	.	.	1	.	.	B	+	6	2	26	21	.	90	.	.	.
	1100	.			.												.				78	70					.
RROP2	300	B	.	LS	.	1	.	.	.	3	.	.	.	1	.	.	B	+	6	2	26	21	.	90	.	.	.
	1100	.			.												.				78	70					.
RRSS1	300	B	R	L	.	1	.	.	.	3	.	.	.	1	.	.	B	+	6	2	24	.	Y	90	90	.	O
	1100	.			.												.				75	.					.
RRSS2	300	B	R	L	.	1	.	.	.	3	.	.	.	1	.	.	B	+	6	2	26	21	Y	90	.	.	O
	1100	.			.												.				78	70					.
RRSS3	300	B	.	LS	.	1	.	.	.	3	.	.	.	1	.	.	B	+	6	2	26	21	.	90	.	.	.
	700	.			.												.				78	70					.
SEC01	500	.	.	.	.	.	.	.	.	.	.	.	.	.	.	.	.	0	4	1	26	20	.	.	.	.	.
	.	.			.												.				78	68					.
SEC02	500	.	.	.	.	.	.	.	.	.	.	.	.	.	.	.	.	0	4	1	26	20	.	.	.	.	.
	.	.			.												.				78	68					.
SHR01	200	.	.	.	.	.	.	.	.	.	.	.	.	.	.	.	.	-	6	1.5	26	24	.	.	.	Y	.
	.	.			.												.				78	75					.
SHR02	300	.	.	.	.	.	.	.	.	.	.	.	.	.	.	.	.	-	6	1.5	26	24	.	.	.	Y	.
	.	.			.												.				78	75					.
SL001	200	.	.	LE	.	.	.	.	.	.	.	.	.	.	.	.	.	0	5	1	26	20	.	.	.	.	.
	.	.			.												.				78	68					.
SRCH1	50	.	.	.	E	.	.	.	.	.	.	.	.	.	.	.	E	-	10	.	29	18	.	.	.	Y	.
	.	.			.												.				85	65					.
SRCS1	100	.	.	.	.	.	.	.	.	.	.	.	.	.	.	.	.	0	4	1	26	20	.	.	.	.	.
	.	.			.												.				78	68					.
SRE01	100	.	.	.	.	.	.	.	.	.	.	.	.	.	.	.	.	0	4	1	26	20	.	.	.	.	.
	.	.			.												.				78	68					.

APPENDIX A
ARCHITECTURAL AND ENGINEERING DESIGN REQUIREMENTS

ROOM CODE	ROOM NAME	ARCHITECTURAL MATRL+FIN FL	WAL	CLG	CLG HT	DOOR SIZE	NOISE RM	SC	STRU FLR LOAD
SRF01	STORAGE RM, FREEZER	PB	SPF	SPF	VAR	SP	.	.	13
		.	..	.	VAR	SP	.		275
SRF02	STORAGE RM, FREEZERS - FREESTANDNG	QT	GLG	GLG	VAR	SP	40	40	B
		.	..	.	VAR	SP	45		B
SRGC1	STORAGE RM, GAS CYLINDERS	CS	BPT	GPT	2700	900	45	40	7.5
		.	GPT	.	9-0	3-0	50		150
SRGC2	STORAGE RM, GAS CYLINDERS (SURG)	SV	GLG	GLG	2400	900	35	40	7.5
		.	..	.	8-0	3-0	40		150
SRHM1	STORAGE RM, HAZARDOUS MATERIALS	CS	BPT	GPT	2700	900	45	40	6
		.	GPT	.	9-0	3-0	50		125
SRL01	STORAGE RM, LAB MICROSCOPE SLIDES	SV	GLG	AT2	2700	900	35	40	6
		.	..	.	9-0	3-0	40		125
SRL02	STORAGE RM, LAB PARAFFIN BLOCKS	SV	GLG	AT2	2700	900	35	40	6
		.	..	.	9-0	3-0	40		125
SRLW1	STORAGE RM/AREA, LITTER-WHEELCHAIR	VT	GPT	AT1	2700	OPEN	35	40	6
		.	..	.	9-0	OPEN	40		125
SRPB1	STORAGE RM, PATIENT BAGGAGE	VT	GPT	AT1	2700	900	35	40	6
		.	..	.	9-0	3-0	40		125
SRPP1	STORAGE RM, PEDIATRICS PLAYROOM	CP	GPT	AT1	2700	900	35	40	6
		VT	..	.	9-0	3-0	40		125
SRPS1	STORAGE RM, PARTS STORAGE	VT	GPT	AT1	2700	900	35	40	6
		CS	..	.	9-0	3-0	40		125
SRR01	STORAGE RM, REFRIGERATED	PB	SPF	SPF	VAR	SP	.	.	13
		.	..	.	VAR	SP	.		275
SRR02	STORAGE RM, REFRIGERATORS FREESTND	QT	GLG	GLG	VAR	SP	.	.	B
		.	..	.	VAR	SP	.		B
SRS01	STORAGE RM, SHELVING	VT	GPT	AT1	2700	900	40	40	7.5
		CS	..	.	9-0	3-0	45		150
SRS02	STORAGE RM, MOBILE SHELVING	VT	GPT	AT1	2700	900	.	.	10
		CS	..	.	9-0	3-0	.		200
SRSE1	STORAGE RM, EQUIPMENT/SHELVING	VT	GPT	AT1	2700	900	.	.	7.5
		CS	..	.	9-0	3-0	.		150

APPENDIX A
ARCHITECTURAL AND ENGINEERING DESIGN REQUIREMENTS

ROOM CODE	ELECTRICAL LIGHT LEV	N	EM PWR PWR	LT	N	MEDICAL GASES MC	DA	CA	LA	PA	MV	DHV	DLV	LDE	OX	NO	NI	N	HVAC BL	AC	OA	TEMP SM	WN	RH	FL IN	FN	EX	N
SRF01	200	.	.	LS	E	.	.	.	.	.	.	.	.	.	.	.	.	.	0	10	2	SP	SP	.	.	.	Y	.
	.	.			.													.				SP	SP					.
SRF02	200	.	.	LS	E	.	.	.	.	.	.	.	.	.	.	.	.	.	0	10	2	26	20	.	.	.	Y	.
	.	.			.													.				78	68					.
SRGC1	50	.	.	.	.	.	.	.	.	.	.	.	.	.	.	.	.	.	-	6		.	.	.	.	.	Y	G
	.	.			.													.				.	.					.
SRGC2	200	.	.	LS	.	.	.	.	.	.	.	.	.	.	.	.	.	.	-	6		26	20	.	.	.	Y	G
	.	.			.													.				78	68					.
SRHM1	100	E	.	LS	.	.	.	.	.	.	.	.	.	.	.	.	.	.	-	6		.	.	.	.	.	Y	G
	.	.			.													.				.	.					.
SRL01	100	.	.	.	.	.	.	.	.	.	.	.	.	.	.	.	.	.	+	4	1	26	21	.	.	.	.	.
	.	.			.													.				78	68					.
SRL02	100	.	.	.	.	.	.	.	.	.	.	.	.	.	.	.	.	.	+	4	1	26	21	.	.	.	.	.
	.	.			.													.				78	68					.
SRLW1	100	.	.	.	.	.	.	.	.	.	.	.	.	.	.	.	.	.	0	4	1	26	21	.	.	.	.	.
	.	.			.													.				78	68					.
SRPB1	100	.	.	.	.	.	.	.	.	.	.	.	.	.	.	.	.	.	0	4	1	26	20	.	.	.	.	.
	.	.			.													.				78	68					.
SRPP1	100	.	.	.	.	.	.	.	.	.	.	.	.	.	.	.	.	.	0	4	1	26	20	.	.	.	.	.
	.	.			.													.				78	68					.
SRPS1	100	.	.	.	.	.	.	.	.	.	.	.	.	.	.	.	.	.	0	4	1	26	20	.	.	.	.	.
	.	.			.													.				78	68					.
SRR01	200	.	.	LS	E	.	.	.	.	.	.	.	.	.	.	.	.	.	0	.	.	.	.	.	.	.	.	.
	.	.			.													.				.	.					.
SRR02	200	.	.	LS	E	.	.	.	.	.	.	.	.	.	.	.	.	.	0	.	.	.	.	.	.	.	.	.
	.	.			.													.				.	.					.
SRS01	100	.	.	.	.	.	.	.	.	.	.	.	.	.	.	.	.	.	0	4	1	26	20	.	.	.	.	.
	.	.			.													.				78	68					.
SRS02	100	.	.	.	.	.	.	.	.	.	.	.	.	.	.	.	.	.	0	4	1	26	20	.	.	.	.	.
	.	.			.													.				78	68					.
SRSE1	100	.	.	.	.	.	.	.	.	.	.	.	.	.	.	.	.	.	0	4	1	26	20	.	.	.	.	.
	.	.			.													.				78	68					.

APPENDIX A
ARCHITECTURAL AND ENGINEERING DESIGN REQUIREMENTS

ROOM CODE	ROOM NAME	ARCHITECTURAL MATRL+FIN FL	WAL	CLG	CLG HT	DOOR SIZE	NOISE RM	SC	STRU FLR LOAD
SRTE1	STORAGE RM, TRACTION EQUIPMENT	SV	GLG	AT1	2700	1200	.	.	6
		VT	GPT	.	9-0	4-0	.		125
SSC01	SECURE STORAGE, CAGE	VT	GPT	AT1	2700	900	.	.	6
		CS	..	.	9-0	3-0	.		125
SSS01	SECURE STORAGE, SAFE	VT	SSP	SSP	VAR	SP	.	.	C
		CS	..	.	VAR	SP	.		C
SSV01	SECURE STORAGE, VAULT	VT	CCS	CCS	VAR	900	.	.	6
		CS	BPT	BPT	VAR	3-0	.		125
TCGS1	TREATMENT CUBICLE GENERAL SURGICAL	SV	GLG	AT2	2700	900	30	40	3
		.	..	.	9-0	3-0	35		60
TLTD1	TOILET/SHOWER, DUTY ROOM	CT	GCT	GLG	2400	900	35	40	3
		SV	SPF	SPF	8-0	3-0	40		60
TLTF0	TOILET/SHOWER, HANDICAP ACCESSIBLE	SV	GCT	GLG	2400	900	35	40	3
		CT	SPF	SPF	8-0	3-0	40		60
TLTF1	TOILET, FEMALE, HANDICAPPED	SV	GLG	GLG	2400	900	35	40	3
		CT	..	.	8-0	3-0	40		60
TLTF2	TOILET FEMALE WITH CHANGING COUNTER	CT	GLG	GLG	2400	900	35	40	3
		SV	..	.	8-0	3-0	40		60
TLTF3	TOILET/SHOWER FEMALE	CT	GCT	GLG	2400	900	35	40	3
		SV	GLG	.	8-0	3-0	40		60
TLTF4	TOILET/TUB/SHOWER-PEDIATRICS	CT	GCT	GLG	2400	SP	35	40	3
		SV	GLG	.	8-0	SP	40		60
TLTF5	TOILET/SHOWER FEMALE OBSTETRICS	CT	GCT	GLG	2400	900	35	40	3
		SV	GLG	.	8-0	3-0	40		60
TLTF6	TOILET FEMALE OBSTETRICS WARD	SV	GLG	GLG	2400	900	35	40	3
		CT	..	.	8-0	3-0	40		60
TLTM1	TOILET, MALE, HANDICAPPED	SV	GLG	GLG	2400	900	35	40	3
		CT	..	.	8-0	3-0	40		60
TLTM2	TOILET MALE WITH CHANGING COUNTER	SV	GLG	GLG	2400	900	35	40	3
		CT	..	.	8-0	3-0	40		60
TLTM3	TOILET/SHOWER MALE	CT	GCT	GLG	2400	900	35	40	3
		SV	GLG	.	8-0	3-0	40		60

APPENDIX A
ARCHITECTURAL AND ENGINEERING DESIGN REQUIREMENTS

ROOM CODE	ELECTRICAL LIGHT LEV	N	EM PWR PWR	LT	N	MEDICAL GASES MC A	DCA	LA	PA	MV	DHV	DLV	LDE	OX	NO	NI	N	HVAC BL	AC	OA	TEMP SM	WN	RH	FL IN	FN	EX	N
SRTE1	100	.	.	.	.	.	.	.	.	.	.	.	.	.	.	.	.	0	4	1	26	20	.	.	.	.	.
	.	.			.												.				78	68					.
SSC01	100	.	.	.	.	.	.	.	.	.	.	.	.	.	.	.	.	0	4	1	26	20	.	.	.	.	.
	.	.			.												.				78	68					.
SSS01	100	.	.	.	.	.	.	.	.	.	.	.	.	.	.	.	.	0	.	.	.	.	.	.	.	.	.
	.	.			.												.				.	.					.
SSV01	100	.	.	.	.	.	.	.	.	.	.	.	.	.	.	.	.	0	6	1	26	21	.	.	.	.	.
	.	.			.												.				78	68					.
TCGS1	500	D	.	.	.	1	.	.	.	1	.	.	.	1	.	.	.	+	12	3	20	24	.	90	.	.	.
	1100	.			.												.				68	75					.
TLTD1	200	.	.	.	.	.	.	.	.	.	.	.	.	.	.	.	.	.	4	2	.	.	.	.	.	.	.
	.	.			.												.				.	.					.
TLTF0	200	.	.	.	.	.	.	.	.	.	.	.	.	.	.	.	.	EX	10	.	.	.	.	.	.	Y	.
	.	.			.												.				.	.					.
TLTF1	200	.	.	.	.	.	.	.	.	.	.	.	.	.	.	.	.	EX	10	.	.	.	.	.	.	Y	.
	.	.			.												.				.	.					.
TLTF2	300	.	.	.	.	.	.	.	.	.	.	.	.	.	.	.	.	EX	10	.	.	.	.	.	.	Y	.
	.	.			.												.				.	.					.
TLTF3	200	.	.	.	.	.	.	.	.	.	.	.	.	.	.	.	.	EX	10	.	.	.	.	.	.	Y	.
	.	.			.												.				.	.					.
TLTF4	200	.	.	.	.	.	.	.	.	.	.	.	.	.	.	.	.	EX	10	.	.	.	.	.	.	Y	.
	.	.			.												.				.	.					.
TLTF5	200	.	.	.	.	.	.	.	.	.	.	.	.	.	.	.	.	EX	10	.	.	.	.	.	.	Y	.
	.	.			.												.				.	.					.
TLTF6	200	.	.	.	.	.	.	.	.	.	.	.	.	.	.	.	.	EX	10	.	.	.	.	.	.	Y	.
	.	.			.												.				.	.					.
TLTM1	200	.	.	.	.	.	.	.	.	.	.	.	.	.	.	.	.	EX	10	.	.	.	.	.	.	Y	.
	.	.			.												.				.	.					.
TLTM2	300	.	.	.	.	.	.	.	.	.	.	.	.	.	.	.	.	EX	10	.	.	.	.	.	.	Y	.
	.	.			.												.				.	.					.
TLTM3	200	.	.	.	.	.	.	.	.	.	.	.	.	.	.	.	.	EX	10	.	.	.	.	.	.	Y	.
	.	.			.												.				.	.					.

APPENDIX A
ARCHITECTURAL AND ENGINEERING DESIGN REQUIREMENTS

ROOM CODE	ROOM NAME	ARCHITECTURAL MATRL+FIN FL	WAL	CLG	CLG HT	DOOR SIZE	NOISE RM	SC	STRU FLR LOAD
TLTP1	TOILET PSYCHIATRIC	SV	GLG	GLG	2400	1050	35	40	3
		CT	..	.	8-0	3-6	40		60
TLTP3	TOILET/SHOWER PSYCHIATRIC	CT	GCT	GLG	2400	1050	35	40	3
		SV	GLG	.	8-0	3-6	40		60
TLTS1	TOILET SPECIMEN HANDICAPPED	SV	GLG	GLG	2400	900	35	40	3
		CT	..	.	8-0	3-0	40		60
TRBM1	TX BONE MARROW	SV	GLG	GLG	2700	1050	30	40	3
		.	..	.	3-6	3-6	35		60
TREE1	TX ROOM ENDOSCOPIC EXAM (UGI)	SV	GLG	GLG	2700	D	30	40	3
		.	..	.	9-0		35		60
TREN1	TX ENT	SV	GLG	GLG	2700	900	25	40	3
		.	..	.	9-0	3-0	30		60
TRET1	TX EMERGENCY TRAUMA ROOM 2 BED	CT	GCT	GLG	2700	H	35	50	3
		SV	GLG	.	9-0		40		60
TRET2	TX EMERGENCY TRAUMA WITH XRAY	CT	GCT	GLG	2700	H	35	50	3
		SV	GLG	.	9-0		40		60
TREY1	TX EYE - OPHTHALMOLOGY	SV	GLG	GLG	2700	900	30	40	3
		.	..	.	9-0	3-0	35		60
TRGM1	TX ROOM GENERAL MEDICAL	SV	GLG	GLG	2700	900	30	40	3
		.	..	.	9-0	3-0	35		60
TRGS1	TX ROOM GENERAL SURGICAL	SV	GLG	GLG	2700	900	30	40	3
		.	..	.	9-0	3-0	35		60
TRIF1	TX INFANT FEVER RAPID REDUCTION	SV	GLG	GLG	2700	900	30	50	3
		.	..	.	9-0	3-0	35		60
TRNP1	TX PSYCHIATRIC	CP	GPT	AT1	2700	1050	30	40	3
		VT	..	.	9-0	3-6	35		60
TROB1	TX OB/GYN	SV	GLG	GLG	2700	900	30	40	3
		VT	..	.	9-0	3-0	35		60
TROR1	TX ORTHOPEDIC	SV	GLG	GLG	2700	900	30	40	3
		VT	..	.	9-0	3-0	35		60
TRPE1	TX ROOM PROCTOSCOPIC EXAM (LGI)	SV	GLG	GLG	2700	900	30	40	3
		VT	..	.	9-0	3-0	35		60

APPENDIX A
ARCHITECTURAL AND ENGINEERING DESIGN REQUIREMENTS

ROOM CODE	ELECTRICAL LIGHT LEV	N	EM PWR PWR	LT	N	MEDICAL GASES MC	DCA	LA	PA	MV	DHV	DLV	LDE	OX	NO	NI	N	HVAC BL	AC	OA	TEMP SM	WN	RH	FL IN	FN	EX	N
TLTP1	200	.	.	.	.	.	.	.	.	.	.	.	.	.	.	.	.	EX	10	.	.	.	.	.	.	Y	.
	.	.			.												.				.	.					.
TLTP3	200	.	.	.	.	.	.	.	.	.	.	.	.	.	.	.	.	EX	10	.	.	.	.	.	.	Y	.
	.	.			.												.				.	.					.
TLTS1	200	.	.	.	.	.	.	.	.	.	.	.	.	.	.	.	.	EX	10	.	.	.	.	.	.	Y	.
	.	.			.												.				.	.					.
TRBM1	500	D	.	LB	E	.	.	.	.	.	.	.	.	.	.	.	.	0	8	2	26	20	.	90	.	.	.
	1100	.			.												.				.78	.68					.
TREE1	500	D	.	.	.	1	.	.	.	2	.	.	.	1	.	.	.	0	8	2	26	20	.	90	.	.	.
	1100	.			.												.				78	68					.
TREN1	500	D	.	.	.	.	.	.	.	1	.	.	.	1	.	.	.	0	4	2	26	20	.	90	.	.	.
	1100	.			.												.				78	68					.
TRET1	1100	D	R	L	.	2	.	.	.	3	.	.	.	2	.	.	B	+	12	5	24	24	.	90	.	.	.
	.	.			.												.				75	75					.
TRET2	1100	D	R	L	.	2	.	.	.	3	.	.	.	2	.	.	B	+	12	5	24	24	.	90	.	.	.
	.	.			.												.				75	75					.
TREY1	500	D	.	.	.	1	.	.	.	1	.	.	.	1	.	.	.	0	6	2	26	20	.	90	.	.	.
	1100	.			.												.				78	68					.
TRGM1	500	D	.	.	.	.	.	.	.	1	.	.	.	1	.	.	.	0	6	2	26	20	.	90	.	.	.
	1100	.			.												.				78	68					.
TRGS1	500	D	.	.	.	.	.	.	.	1	.	.	.	1	.	.	.	0	6	2	26	20	.	90	.	.	.
	1100	.			.												.				78	68					.
TRIF1	500	D	.	.	.	1	.	1	.	1	.	.	.	1	.	.	B	0	6	2	26	20	.	90	.	.	.
	1100	.			.												.				78	68					.
TRNP1	500	C	.	.	.	.	.	.	.	.	.	.	.	.	.	.	.	0	6	2	26	20	.	.	.	.	.
	.	.			.												.				78	68					.
TROB1	500	D	.	.	.	.	.	.	.	1	.	.	.	1	.	.	.	0	6	2	26	20	.	90	.	.	.
	1100	.			.												.				78	68					.
TROR1	500	D	.	.	.	1	.	.	.	1	.	.	.	1	.	.	.	0	6	2	26	20	.	90	.	.	.
	1100	.			.												.				78	68					.
TRPE1	500	D	.	.	.	1	.	.	.	2	.	.	.	1	.	.	.	+	6	2	26	20	.	90	.	.	.
	1100	.			.												.				78	68					.

APPENDIX A
ARCHITECTURAL AND ENGINEERING DESIGN REQUIREMENTS

ROOM CODE	ROOM NAME	ARCHITECTURAL MATRL+FIN FL	WAL	CLG	CLG HT	DOOR SIZE	NOISE RM	SC	STRU FLR LOAD
TRPE2	TX PULMONARY ENDOSCOPY	SV	GLG	GLG	2700	900	30	40	3
		VT	..	.	9-0	3-0	35		60
TRWD1	TX ROOM WARD MEDICAL/SURG	SV	GLG	GLG	2700	900	30	40	3
		.	..	.	9-0	3-0	35		60
TUB01	TUB ROOM WARD	CT	GCT	GLG	2400	900	35	40	C
		SV	GLG	.	8-0	3-0	40		C
TUB02	TUB ROOM PEDIATRICS	CT	GCT	GLG	2400	900	35	40	C
		SV	GLG	.	8-0	3-0	40		C
UCCL1	UTILITY CLEAN CLINICS	VT	GPT	AT1	2400	900	35	40	5
		.	..	.	8-0	3-0	40		100
UCWD1	UTILITY CLEAN WARD	VT	GLG	AT1	2400	900	35	40	5
		.	..	.	8-0	3-0	40		100
USCL1	UTILITY SOILED CLINICS	VT	GLG	AT1	2400	900	35	40	5
		SV	..	.	8-0	3-0	40		100
USPS1	MAIL ROOM, U.S. POST OFF	VT	GPT	AT1	2700	900	35	50	6
		.	..	.	9-0	3-0	40		125
USWD1	UTILITY SOILED WARD	VT	GLG	AT1	2400	900	35	40	5
		SV	..	.	8-0	3-0	40		100
UTC01	UTILITY TRASH COLLECTION	CS	GLG	GLG	2400	900	35	40	6
		VT	BPT	.	8-0	3-0	40		125
UTC02	UTILITY TRASH HOLDING AND DECON	CS	CCS	GLG	3000	900	.	40	B
		.	BPT	.	10-0	3-0	.		B
UTLC1	UTILITY TRASH AND LINEN COLLECTION	VT	GLG	GLG	2400	900	.	40	C
		CS	BPT	.	8-0	3-0	.		.
VCU01	VETERINARY CLEAN UTILITY	ER	BEP	GEP	2700	1200	.	40	C
		.	..	.	9-0	4-0	.		.
VCWA1	VETERINARY CAGE WASH AREA	ER	BEP	GEP	2700	1200	35	50	C
		.	..	.	9-0	4-0	40		.
VEX01	VETERINARY EXAMINATION/TX ROOM	AR	BEP	GEP	2700	VET	35	50	C
		.	..	.	9-0		40		.
VFIL1	VETERINARY FOOD INSPECTION LAB	AR	BEP	GEP	2700	1200	35	50	C
		.	..	.	9-0	4-0	40		.

APPENDIX A
ARCHITECTURAL AND ENGINEERING DESIGN REQUIREMENTS

ROOM CODE	ELECTRICAL LIGHT LEV	N	EM PWR PWR	LT	N	MEDICAL GASES MCA	DCA	LA	PA	MV	DHV	DLV	LDE	OX	NO	NI	N	HVAC BL	AC	OA	TEMP SM	WN	RH	FL IN	FN	EX	N
TRPE2	500	D	.	.	.	1	.	.	.	2	.	.	.	1	.	.	.	-	12	2	26	20	.	90	.	Y	.
	1100	.			.												.				78	68					.
TRWD1	500	D	.	.	.	1	.	.	.	1	.	.	.	1	.	.	.	0	6	2	26	21	.	90	.	.	.
	1100	.			.												.				78	70					.
TUB01	200	.	.	.	.	.	.	.	.	.	.	.	.	.	.	.	.	-	6	2	26	24	.	90	.	Y	.
	.	.			.												.				78	75					.
TUB02	200	.	.	.	.	.	.	.	.	.	.	.	.	.	.	.	.	-	6	2	26	24	.	90	.	Y	.
	.	.			.												.				78	75					.
UCCL1	200	.	.	.	.	.	.	.	.	.	.	.	.	.	.	.	.	+	4	1	26	20	.	90	.	.	.
	.	.			.												.				78	68					.
UCWD1	200	.	.	.	.	.	.	.	.	.	.	.	.	.	.	.	.	+	4	1	26	21	.	90	.	.	.
	.	.			.												.				78	70					.
USCL1	200	.	.	.	.	.	.	.	.	.	.	.	.	.	.	.	.	-	6	1	26	20	.	.	.	Y	.
	.	.			.												.				78	68					.
USPS1	500	F	.	.	.	.	.	.	.	.	.	.	.	.	.	.	.	0	4	1	26	20	.	.	.	.	.
	1100	.			.												.				78	68					.
USWD1	200	.	.	.	.	.	.	.	.	.	.	.	.	.	.	.	.	-	10	1	26	21	.	90	.	Y	.
	.	.			.												.				78	70					.
UTC01	200	.	.	.	.	.	.	.	.	.	.	.	.	.	.	.	.	-	10	1	26	20	.	.	.	Y	.
	.	.			.												.				78	68					.
UTC02	50	.	.	.	.	.	.	.	1	.	.	.	.	.	.	.	.	-	10	1	.	.	.	.	.	.	.
	.	.			.												.				.	.					.
UTLC1	200	.	.	LS	.	.	.	.	.	.	.	.	.	.	.	.	.	-	10	1	26	20	.	.	.	Y	.
	.	.			.												.				78	68					.
VCU01	200	.	.	LE	.	.	.	.	.	.	.	.	.	.	.	.	.	+	6	1	26	20	.	90	.	.	.
	.	.			.												.				78	68					.
VCWA1	200	.	.	LE	.	.	.	.	.	.	.	.	.	.	.	.	.	-	10	1	26	20	.	.	.	Y	.
	.	.			.												.				78	68					.
VEX01	500	D	R	LB	.	1	.	.	.	1	.	.	.	.	.	1	.	0	4	2	26	20	.	.	.	Y	.
	1100	.			.												.				78	68					.
VFIL1	500	C	.	LS	.	.	.	.	.	.	.	.	.	.	.	.	.	-	6	2	26	20	.	90	.	Y	M
	1100	.			.												.				78	68					.

APPENDIX A
ARCHITECTURAL AND ENGINEERING DESIGN REQUIREMENTS

ROOM CODE	ROOM NAME	ARCHITECTURAL MATRL+FIN FL	WAL	CLG	CLG HT	DOOR SIZE	NOISE RM	SC	STRU FLR LOAD
VFP01	VETERINARY FOOD PREP ROOM	AR	BEP	GEP	2700	1200	35	50	C
		.	..	.	9-0	4-0	40		.
VHAU1	VETERINARY HOLDING AREA UTILITY/STR	AR	BEP	GEP	2700	1200	35	50	C
		.	..	.	9-0	4-0	40		.
VKEN1	VETERINARY KENNEL AREA IN/OUTSIDE	ER	BEP	GEP	2700	1200	35	50	C
		.	..	.	9-0	4-0	40		.
VKEN2	VETERINARY KENNEL AREA CONFINE ONLY	ER	BEP	GEP	2700	1200	35	50	C
		.	..	.	9-0	4-0	40		.
VLAH1	VETERINARY LARGE ANIMAL HOLDING AR	ER	BEP	GEP	2700	VET	35	50	C
		.	..	.	9-0		40		.
VLB01	VETERINARY LABORATORY	AR	BEP	GEP	2700	1200	35	40	C
		.	..	.	9-0	4-0	40		.
VLBV1	VETERINARY LABORATORY VIROLOGY	ER	BEP	GEP	2700	1200	35	40	C
		.	..	.	9-0	4-0	40		.
VPH01	VETERINARY PHARMACY	ER	BEP	GEP	2700	1200	35	40	C
		.	..	.	9-0	4-0	40		.
VRHA1	VETERINARY RODENT HOLDING AREA	ER	BEP	GEP	2700	VET	35	40	C
		.	..	.	9-0		40		
VRQA1	VETERINARY RABIES QUARANTINE AREA	ER	BEP	GEP	2700	VET	35	40	C
		.	..	.	9-0		40		
VRRP1	VETERINARY RECOVERY ROOM/PREP AREA	ER	BEP	GEP	2700	1200	35	40	C
		.	..	.	9-0	4-0	40		
VRUN1	VETERINARY ANIMAL RUN	ER	BEP	GEP	2700	1200	35	40	C
		.	..	.	9-0	4-0	40		
VS001	VETERINARY SURGERY ROOM	ER	BEP	GEP	2700	1200	35	40	C
		.	..	.	9-0	4-0	40		
VXER1	VETERINARY XRAY EXPOSURE ROOM	ER	BEL	GEP	2900	1200	35	40	C
		.	..	.	9-6	4-0	40		
WBG01	WELDING BOOTH GENERAL USE	CS	CCS	GLG	2700	900	60	50	5
		.	BPT	.	9-0	3-0	60		100
WRC01	WAITING ROOM, CHAIRS ONLY	CP	GVF	AT1	2700	900	35	40	3
		.	GPT	.	9-0	3-0	40		60

APPENDIX A
ARCHITECTURAL AND ENGINEERING DESIGN REQUIREMENTS

ROOM CODE	ELECTRICAL LIGHT LEV	N	EM PWR PWR	LT	N	MEDICAL GASES MC A	DC A	LA A	PA A	MV A	DHV A	DLV A	DLE A	OX A	NO A	NI A	N A	HVAC BL	AC	OA	TEMP SM	WN	RH	FL IN	FN	EX	N
VFP01	500	.	.	LS	.	.	.	.	.	.	.	.	.	.	.	.	.	+	6	2	26	20	.	90	.	Y	.
	.	.			.												.				78	68					.
VHAU1	150	.	.	LE	.	.	.	.	.	.	.	.	.	.	.	.	.	-	6	2	26	20	.	.	.	Y	.
	.	.			.												.				78	68					.
VKEN1	100	.	.	LS	.	.	.	.	.	.	.	.	.	.	.	.	.	-	10	10	26	20	.	.	.	Y	.
	300	.			.												.				78	68					.
VKEN2	100	.	.	LS	.	.	.	.	.	.	.	.	.	.	.	.	.	-	10	2	26	20	.	.	.	Y	.
	300	.			.												.				78	68					.
VLAH1	100	.	.	LS	.	.	.	.	.	.	.	.	.	.	.	.	.	-	10	10	64	79	.	.	.	Y	.
	300	.			.												.				18	26					.
VLB01	500	C	.	LB	.	1	.	1	.	1	.	.	.	1	.	.	B	-	6	2	26	20	.	80	.	.	M
	1100	.			.												.				78	68					
VLBV1	500	C	.	LB	.	1	.	1	.	1	.	.	.	1	.	.	B	-	6	2	26	20	.	80	.	.	M
	1100	.			.												.				78	68					
VPH01	1100	F	.	LE	.	.	.	.	.	.	.	.	.	.	.	.	.	+	4	2	26	20	.	.	.	.	.
	.	.			.												.				78	68					
VRHA1	100	.	R	LS	.	.	.	.	.	.	.	.	.	.	.	.	.	-	15	15	64	79	.	80	.	Y	.
	300	.			.												.				18	26					.
VRQA1	100	.	R	LB	.	.	.	.	.	.	.	.	.	.	.	.	.	-	10	2	26	20	.	80	.	Y	.
	300	.			.												.				78	68					.
VRRP1	500	.	RA	LB	.	1	.	.	.	1	.	.	.	1	.	.	.	+	6	2	64	79	.	80	.	Y	.
	.	.			.												.				18	26					.
VRUN1	100	.	.	LE	.	.	.	.	.	.	.	.	.	.	.	.	.	0	6	2	26	20	.	.	.	Y	.
	.	.			.												.				78	68					.
VS001	1100	D	RA	LB	.	1	.	.	.	2	.	.	.	1	.	.	.	+	15	5	18	26	Y	60	90	Y	C
	.	.			.												.				64	79					.
VXER1	500	I	.	.	4	.	.	.	.	.	.	.	.	.	.	.	.	0	4	2	26	20	.	80	.	Y	.
	.	.			.												.				78	68					.
WBG01	700	.	.	.	.	.	.	.	.	.	.	.	.	.	.	.	.	-	10	1	.	.	.	.	.	Y	
	.	.			.												.				.	.					.
WRC01	300	.	.	LE	.	.	.	.	.	.	.	.	.	.	.	.	.	0	6	1	26	20	.	90	.	.	.
	.	.			.												.				78	68					.

APPENDIX A
ARCHITECTURAL AND ENGINEERING DESIGN REQUIREMENTS

ROOM CODE	ROOM NAME	ARCHITECTURAL MATRL+FIN FL	WAL	CLG	CLG HT	DOOR SIZE	NOISE RM	SC	STRU FLR LOAD
WRC02	WAITING ROOM, COMPLETE	CP	GVF	AT1	2700	900	35	40	3
		.	GPT	.	9-0	3-0	40		60
WRCA1	WAITING ROOM, CLOTHING ALCOVE	CP	GVF	AT1	2700	900	35	40	3
		.	GPT	.	9-0	3-0	40		60
WRCH1	WORKROOM, CHARTING AREA	CP	GPT	AT1	2400	900	30	40	3
		VT	..	.	8-0	3-0	35		60
WRCL1	WAITING ROOM, LITTER & CHAIR	CP	GVF	AT1	2700	900	35	40	3
		VT	GPT	.	9-0	3-0	40		60
WRF01	WAITING ROOM, FAMILY	CP	GVF	AT1	2700	900	35	40	3
		.	GPT	.	9-0	3-0	40		60
WRFW1	WAITING ROOM, FORMS WRITING AREA	CP	GVF	AT1	2700	900	35	40	3
		.	GPT	.	9-0	3-0	40		60
WRPC1	WAITING ROOM, PULMONARY CLINIC	CP	GVF	AT1	2700	900	35	40	3
		.	GPT	.	9-0	3-0	40		60
WRL01	WAITING ROOM, LITTER ONLY	VT	GPT	AT1	2700	900	30	40	3
		.	..	.	9-0	3-0	40		60
WREM1	WAITING ROOM, EMERGENCY	VT	GPT	AT1	2700	900	30	40	3
		.	.	.	9-0	3-0	40		60
XABP1	XRAY ANGIO BIPLANE DIGITAL UNIT	SV	GLG	AT1	3000	1200	35	40	5
		VT	GPT	GPT	10-0	4-0	40		100
XACR1	XRAY ANGIOGRAPHIC CONTROL ROOM	SV	GLG	AT1	2400	900	35	40	5
		VT	GPT	GPT	8-0	3-0	40		100
XACV1	XRAY ANGIO COMPUTER & VIEWING ROOM	SV	GLG	AT1	2400	900	35	40	5
		VT	GPT	.	8-0	3-0	40		100
XAIR1	XRAY ANGIO INSTRUMENT ROOM	SV	GLG	AT1	2400	900	35	40	5
		VT	GPT	.	8-0	3-0	40		100
XAPP1	XRAY PATIENT PREP ROOM, SPEC PROC	SV	GLG	AT1	2400	900	35	40	3
		VT	GPT	.	8-0	3-0	40		60
XASP1	XRAY ANGIOGRAPHIC SINGLE PLANE	SV	GLG	AT1	3000	1200	35	40	5
		VT	GPT	GPT	10-0	4-0	40		100
XCCA1	XRAY CARDIAC CATH ADP EQUIPMENT RM	SV	GLG	AT1	2400	900	35	40	5
		VT	GPT	.	8-0	3-0	40		100

APPENDIX A
ARCHITECTURAL AND ENGINEERING DESIGN REQUIREMENTS

ROOM CODE	ELECTRICAL LIGHT LEV	N	EM PWR PWR	LT	N	MEDICAL GASES MC	DCA	LA	PA	MV	DHV	DLV	LDE	OX	NO	NI	N	HVAC BL	AC	OA	TEMP SM	WN	RH	FL IN	FN	EX	N
WRC02	300	.	.	LE	.	.	.	.	.	.	.	.	.	.	.	.	.	0	6	1	26	20	.	90	.	.	.
	.	.			.												.				78	68					.
WRCA1	150	.	.	LE	.	.	.	.	.	.	.	.	.	.	.	.	.	0	4	1	26	20	.	.	.	.	.
	.	.			.												.				78	68					.
WRCH1	500	.	.	L	.	.	.	.	.	.	.	.	.	.	.	.	.	0	4	1	26	21	.	.	.	.	.
	.	.			.												.				78	70					.
WRCL1	300	.	.	LE	.	.	.	.	.	.	.	.	.	.	.	.	.	0	6	1	26	21	.	90	.	.	.
	.	.			.												.				78	70					.
WRF01	300	.	.	LE	.	.	.	.	.	.	.	.	.	.	.	.	.	0	6	1	26	20	.	90	.	.	.
	.	.			.												.				78	68					.
WRFW1	300	.	.	LE	.	.	.	.	.	.	.	.	.	.	.	.	.	0	6	1	26	20	.	90	.	.	.
	.	.			.												.				78	68					.
WRPC1	300	.	.	LE	.	.	.	.	.	.	.	.	.	.	.	.	.	-	15	2	26	21	.	90	.	Y	.
	.	.			.												.				78	70					.
WRL01	100	.	.	.	.	.	.	.	.	.	.	.	.	.	.	.	.	0	4	1	26	21	.	90	.	.	.
	.	.			.												.				78	70					.
WREM1	300	.	.	LE	.	.	.	.	.	.	.	.	.	.	.	.	.	-	15	2	26	21	.	90	.	Y	.
	.	.			.												.				78	70					.
XABP1	500	D	.	.	U	1	.	.	.	2	.	.	.	1	.	.	.	0	6	2	26	21	.	90	.	.	.
	.	I			.												.				78	70					.
XACR1	300	.	.	.	U	.	.	.	.	.	.	.	.	.	.	.	.	0	6	2	26	21	.	.	.	.	.
	.	.			.												.				78	70					.
XACV1	300	A	.	.	U	.	.	.	.	.	.	.	.	.	.	.	.	0	6	2	26	21	.	.	.	.	N
	.	.			.												.				78	70					.
XAIR1	300	.	.	.	U	.	.	.	.	.	.	.	.	.	.	.	.	0	6	2	26	21	.	.	.	.	.
	.	.			.												.				78	70					.
XAPP1	500	.	.	.	U	1	.	.	.	2	.	.	.	1	.	.	.	0	6	2	26	21	.	90	.	.	.
	1100	.			.												.				78	70					.
XASP1	500	D	.	.	U	1	.	.	.	2	.	.	.	1	.	.	.	0	6	2	26	21	.	90	.	.	.
	.	I			.												.				78	70					.
XCCA1	500	.	RA	LB	.	.	.	.	.	.	.	.	.	.	.	.	.	+	15	5	20	24	.	90	95	.	C
	.	.			.												.				68	75					N

APPENDIX A
ARCHITECTURAL AND ENGINEERING DESIGN REQUIREMENTS

ROOM CODE	ROOM NAME	ARCHITECTURAL MATRL+FIN FL	WAL	CLG	CLG HT	DOOR SIZE	NOISE RM	SC	STRU FLR LOAD
XCCC1	XRAY CARDIAC CATH CONTROL ROOM	SV	GLG	AT1	2400	900	35	40	5
		VT	GPT	.	8-0	3-0	40		100
XCCE1	XRAY CARDIAC CATH EXPOSURE ROOM	SV	GLG	AT1	3000	1200	35	40	5
		VT	GPT	GPT	10-0	4-0	40		100
XCCE2	XRAY CARDIAC CATH EXPOS. RM BIPLANE	SV	GLG	AT1	3000	1200	35	40	5
		VT	GPT	GPT	10-0	4-0	40		100
XCCI1	XRAY CARDIAC CATH INST. ROOM	SV	GLG	AT1	2400	900	35	40	5
		VT	GPT	.	8-0	3-0	40		100
XCCP1	XRAY CARDIAC CATH PREP	SV	GLG	AT1	2400	1200	35	40	3
		VT	GPT	.	8-0	4-0	40		60
XCTC1	XRAY COMPUTED TOMO CONTROL AREA	SV	GLG	AT1	2400	1200	35	40	5
		VT	GPT	.	8-0	4-0	40		100
XCTC2	XRAY COMPUTED TOMO COMPUTER ROOM	SV	GLG	AT1	2400	1200	35	40	5
		VT	GPT	.	8-0	4-0	40		100
XCTI1	XRAY COMPUTED TOMO INDEP VIEW CONSO	SV	GLG	AT1	2400	1200	35	40	5
		VT	GPT	.	8-0	4-0	40		100
XCTP1	XRAY COMPUTED TOMO PATIENT PREP RM	SV	GLG	AT1	2400	1200	35	40	3
		VT	GPT	.	8-0	4-0	40		60
XCTS1	XRAY COMPUTED TOMOGRAPHY SCANNER	SV	GLG	AT1	3000	1200	35	40	5
		VT	GPT	GPT	10-0	4-0	40		100
XDCM1	XRAY DIAG CHEST/MAMMO ROOM	SV	GLG	AT1	3000	1200	35	40	5
		VT	GPT	GPT	10-0	4-0	40		100
XDCS1	XRAY DIAG CHESTSTAND MANUAL	SV	GLG	AT1	3000	1200	35	40	5
		VT	GPT	GPT	10-0	4-0	40		100
XDCS2	XRAY DIAG CHESTSTAND AUTOMATIC	SV	GLG	AT1	3000	1200	35	40	5
		VT	GPT	GPT	10-0	4-0	40		100
XDCY1	XRAY DIAG CYSTO RAD ONLY 600 MA	SV	GLG	AT1	3000	1200	35	40	5
		VT	GPT	GPT	10-0	4-0	40		100
XDCY2	XRAY DIAG CYSTO WITH FLUORO 800 MA	SV	GLG	AT1	3000	1200	35	40	5
		VT	GPT	GPT	10-0	4-0	40		100
XDF01	XRAY DIAG FLUOROSCOPIC ONLY (GI)	SV	GLG	AT1	3000	1200	35	40	5
		VT	GPT	GPT	10-0	4-0	40		100

APPENDIX A
ARCHITECTURAL AND ENGINEERING DESIGN REQUIREMENTS

ROOM CODE	ELECTRICAL LIGHT LEV	N	EM PWR PWR	LT	N	MEDICAL GASES MC A	DC A	LA A	PA A	MV	DHV	DLV	LDE	OX	NO	NI	N	HVAC BL	AC	OA	TEMP SM	WN	RH	FL IN	FN	EX	N
XCCC1	300	A	R	L	.	.	.	.	.	.	.	.	.	.	.	.	.	+	15	.	20	24	.	.	.	.	C
	.	.			.												.				68	75					.
XCCE1	300	A	R	L	.	1	.	.	.	2	.	.	.	1	1	.	D	-	10	2	24	20	.	90	.	Y	.
	.	.			.												.				75	68					.
XCCE2	300	A	R	L	.	1	.	.	.	2	.	.	.	1	1	.	D	-	10	2	24	20	.	90	.	Y	.
	.	.			.												.				75	68					.
XCCI1	300	.	.	LS	.	.	.	.	.	.	.	.	.	.	.	.	.	+	15	5	20	24	.	90	95	.	C
	.	.			.												.				68	75					.
XCCP1	500	B	.	L	.	1	.	.	.	2	.	.	.	1	1	.	D	0	6	2	24	.	.	90	95	.	.
	1100	.			.												.				75	.					.
XCTC1	300	A	.	.	U	.	.	.	.	.	.	.	.	.	.	.	.	0	6	2	26	21	.	.	.	.	.
	.	.			.												.				78	70					.
XCTC2	300	.	.	.	U	.	.	.	.	.	.	.	.	.	.	.	.	0	4	2	26	21	.	.	.	.	N
	.	.			.												.				78	70					.
XCTI1	300	A	.	.	U	.	.	.	.	.	.	.	.	.	.	.	.	0	4	2	26	21	.	.	.	.	N
	.	.			.												.				78	70					.
XCTP1	500	B	.	.	U	.	.	.	.	1	.	.	.	1	.	.	.	0	6	2	26	21	.	90	.	.	.
	1100	.			.												.				78	70					.
XCTS1	500	D	.	.	U	.	.	.	.	1	.	.	.	1	.	.	.	0	4	2	26	21	.	90	.	.	.
	.	I			.												.				78	70					.
XDCM1	500	D	.	.	U	.	.	.	.	1	.	.	.	1	.	.	.	0	6	2	26	21	.	90	.	.	.
	.	I			.												.				78	70					.
XDCS1	300	C	.	.	U	.	.	.	.	.	.	.	.	.	.	.	.	0	6	2	26	21	.	90	.	.	.
	.	.			.												.				78	70					.
XDCS2	300	C	RA	LB	.	.	.	.	.	.	.	.	.	.	.	.	.	0	6	2	26	21	.	90	.	.	.
	.	.			.												.				78	70					.
XDCY1	500	D	RA	LB	.	1	.	.	.	3	.	.	.	1	1	.	D	0	6	2	26	21	.	90	.	.	.
	.	I			.												.				78	70					.
XDCY2	500	D	RA	LB	.	1	.	.	.	3	.	.	.	1	1	.	D	0	6	2	26	21	.	90	.	.	.
	.	I			.												.				78	70					.
XDF01	500	D	.	.	U	.	.	.	.	1	.	.	.	1	.	.	.	0	6	2	26	21	.	90	.	.	.
	.	I			.												.				78	70					.

APPENDIX A
ARCHITECTURAL AND ENGINEERING DESIGN REQUIREMENTS

ROOM CODE	ROOM NAME	ARCHITECTURAL MATRL+FIN FL	WAL	CLG	CLG HT	DOOR SIZE	NOISE RM	SC	STRU FLR LOAD
XDLR1	XRAY DIAG LITHOTRIPTER ROOM	SV	GLG	AT2	3000	1200	35	50	C
		VT	GPT	GPT	10-0	4-0	40		C
XDLT1	XRAY DIAG LINEAR TOMO/RAD UNIT	SV	GLG	AT1	3000	1200	35	40	5
		VT	GPT	GPT	10-0	4-0	40		100
XDM01	XRAY DIAG MAMMO FILM SCREEN TYPE	SV	GLG	AT1	3000	1200	35	40	5
		VT	GPT	GPT	10-0	4-0	40		100
XDM02	XRAY DIAG MAMMO XERORADIOGRAPHY	SV	GLG	AT1	3000	1200	35	40	5
		VT	GPT	.	10-0	4-0	40		100
XDMP1	XRAY DIAG MAMMO XEROGRAPHIC PROCESS	SV	GLG	AT1	3000	1200	35	40	5
		VT	GPT	GPT	10-0	4-0	40		100
XDMT1	XRAY DIAG MULTI-DIRECTIONAL TOMO	VT	GLG	AT1	3000	1200	35	40	5
		SV	GPT	GPT	10-0	4-0	40		100
XDR01	XRAY DIAG RAD TILT TABLE HOSP	VT	GLG	AT1	3000	1200	35	40	5
		SV	GPT	GPT	10-0	4-0	40		100
XDR02	XRAY DIAG RAD FLATTOP TABLE CLINIC	VT	GLG	AT1	3000	1200	35	40	5
		SV	GPT	G	10-0	4-0	40		100
XDRF1	XRAY DIAG RAD/FLUORO HOSP GENERAL	VT	GLG	AT1	3000	1200	35	40	5
		SV	GPT	GPT	10-0	4-0	40		100
XDRF2	XRAY DIAG RAD/FLUORO DIGITAL SYS	VT	GLG	AT1	3000	1200	35	40	5
		SV	GPT	GPT	10-0	4-0	40		100
XDRH1	XRAY DIAG RAD W/HEADSTAND	SV	GLG	AT1	3000	1200	35	40	5
		VT	GPT	GPT	10-0	4-0	40		100
XDSB1	XRAY DIAG SUPPORT - BARIUM PREP	SV	GLG	AT2	2400	900	35	40	3
		VT	GPT	.	8-0	3-0	40		60
XDUS1	XRAY DIAG ULTRASOUND REALTIME/DOPPL	SV	GLG	AT1	3000	1200	35	40	5
		VT	GPT	.	10-0	4-0	40		100
XFFA1	XRAY FILM FILES AREA - FIXED AISLE	VT	GPT	AT1	3000	900	35	40	12
		.	..	.	10-0	3-0	40		250
XFFA2	XRAY FILM FILES AREA - MOBILE AISLE	VT	GPT	AT1	3000	900	35	40	17
		.	..	.	10-0	3-0	40		350
XFP01	XRAY FILM PROCESSING - 1 PROCESSOR	SV	GLG	GLG	2400	L	35	45	5
		VT	GPT	.	8-0		40		100

APPENDIX A
ARCHITECTURAL AND ENGINEERING DESIGN REQUIREMENTS

ROOM CODE	ELECTRICAL LIGHT LEV	N	EM PWR PWR	LT	N	MEDICAL GASES MCA	DCA	LAA	PAA	MVV	DHV	DLV	LDE	OX	NO	NI	N	HVAC BL	AC	OA	TEMP SM	WN	RH	FL IN	FN	EX	N
XDLR1	500	D	.	.	U	1	.	.	.	2	.	.	.	1	1	.	D	0	4	2	26	21	.	90	.	.	.
	.	I			.												.				78	70					.
XDLT1	500	D	.	.	U	.	.	.	.	1	.	.	.	1	.	.	.	0	4	2	26	21	.	90	.	.	.
	.	I			.												.				78	70					.
XDM01	500	C	.	.	U	.	.	.	.	.	.	.	.	.	.	.	.	0	4	2	26	21	.	90	.	.	.
	.	.			.												.				78	70					.
XDM02	500	D	.	.	U	.	.	.	.	1	.	.	.	1	.	.	.	0	6	2	26	21	.	90	.	.	.
	.	I			.												.				78	70					.
XDMP1	500	C	.	.	U	.	.	.	.	.	.	.	.	.	.	.	.	+	6	2	26	21	.	90	.	.	.
	.	.			.												.				78	70					.
XDMT1	500	D	.	.	U	.	.	.	.	1	.	.	.	1	.	.	.	0	6	2	26	21	.	90	.	.	.
	.	I			.												.				78	70					.
XDR01	500	D	.	.	U	.	.	.	.	.	.	.	.	.	.	.	.	0	6	2	26	21	.	90	.	.	.
	.	I			.												.				78	70					.
XDR02	500	D	.	.	U	.	.	.	.	.	.	.	.	.	.	.	.	0	6	2	26	21	.	90	.	.	.
	.	I			.												.				78	70					.
XDRF1	500	D	.	.	U	.	.	.	.	.	.	.	.	.	.	.	.	0	6	2	26	21	.	90	.	.	.
	.	I			.												.				78	70					.
XDRF2	500	D	.	.	U	.	.	.	.	.	.	.	.	.	.	.	.	0	6	2	26	21	.	90	.	.	.
	.	I			.												.				78	70					.
XDRH1	500	D	.	.	U	.	.	.	.	1	.	.	.	1	.	.	.	0	6	2	26	21	.	90	.	.	.
	.	I			.												.				78	70					.
XDSB1	700	.	.	.	U	.	.	.	.	.	.	.	.	.	.	.	.	0	6	2	26	20	.	90	.	Y	M
	.	.			.												.				78	68					.
XDUS1	500	D	.	.	U	.	.	.	.	1	.	.	.	1	.	.	.	0	6	2	26	21	.	90	.	.	.
	.	I			.												.				78	70					.
XFFA1	300	.	.	.	.	.	.	.	.	.	.	.	.	.	.	.	.	0	4	2	26	20	.	.	.	.	.
	.	.			.												.				78	68					.
XFFA2	300	.	.	.	.	.	.	.	.	.	.	.	.	.	.	.	.	0	4	2	26	20	.	.	.	.	.
	.	.			.												.				78	68					.
XFP01	200	G	.	.	U	.	.	.	.	.	.	.	.	.	.	.	.	-	10	2.5	26	20	.	90	.	Y	M
	.	.			.												.				78	68					.

APPENDIX A
ARCHITECTURAL AND ENGINEERING DESIGN REQUIREMENTS

ROOM CODE	ROOM NAME	ARCHITECTURAL MATRL+FIN FL	WAL	CLG	CLG HT	DOOR SIZE	NOISE RM	SC	STRU FLR LOAD
XFP02	XRAY FILM PROCESSING - 2 PROCESSORS	SV	GLG	GLG	2400	900	35	45	5
		VT	GPT	.	8-0	3-0	40		100
XFPC1	XRAY FILM PROCESSING - CINE	SV	GLG	GLG	2400	900	35	45	5
		VT	GPT	.	8-0	3-0	40		100
XFSA1	XRAY FILM SORTING AREA	SV	GLG	AT1	2400	900	35	40	5
		VT	GPT	.	8-0	3-0	40		100
XFSC1	XRAY FILM STORAGE CINE FIXED SHELF	SV	GLG	AT1	2400	900	35	40	5
		VT	GPT	.	8-0	3-0	40		100
XFSR1	XRAY FILM SORTING/READING - SMALL	SV	GLG	AT1	2400	900	35	40	3
		VT	GPT	.	8-0	3-0	40		60
XMRC1	XRAY MAGNETIC RESONANCE CONTROL ARE	SV	GLG	AT1	2400	900	35	40	5
		VT	GPT	.	8-0	3-0	40		100
XMRC2	XRAY MAGNETIC RESONANCE COMPUTER RM	SV	GLG	AT1	2400	900	35	40	5
		VT	GPT	.	8-0	3-0	40		100
XMRE1	XRAY MAGNETIC RESONANCE EQUIP ROOM	SV	GLG	AT1	2400	900	35	40	5
		VT	GPT	.	8-0	3-0	40		100
XMRS1	XRAY MAGNETIC RESONANCE SCANNER	SV	GLG	AT1	VAR	1200	35	40	C
		VT	GPT	.	VAR	4-0	40		C
XMRV1	XRAY MAGNETIC RESONANCE VIEWING RM	SV	GLG	AT1	2400	900	35	40	5
		VT	GPT	.	8-0	3-0	40		100
XRM01	XRAY MOBILE RAD UNIT ALCOVE	SV	GVF	AT1	2400	OPEN	35	40	5
		VT	GPT	.	8-0	OPEN	40		100
XRM02	XRAY MOBILE C-ARM STORAGE	VT	GPT	AT1	2700	900	35	40	5
		SV	GLG	.	9-0	3-0	40		100
XTCC1	XRAY THERAPY COBALT CONTROL AREA	SV	GLG	AT1	2400	900	35	40	5
		VT	GPT	.	8-0	3-0	40		100
XTCE1	XRAY THERAPY COBALT AUX EQUIP ROOM	SV	GLG	AT1	2700	900	35	40	5
		VT	GPT	.	9-0	3-0	40		100
XTCT1	XRAY THERAPY COBALT THERAPY	SV	GLG	AT1	3000	1200	35	40	C
		VT	GPT	.	10-0	4-0	40		C
XTEM1	XRAY THERAPY ENTRY MAZE - ALL UNITS	SV	GLG	AT1	3000	SP	35	40	C
		VT	GPT	.	10-0		40		C

APPENDIX A
ARCHITECTURAL AND ENGINEERING DESIGN REQUIREMENTS

ROOM CODE	ELECTRICAL LIGHT LEV	N	EM PWR PWR	LT	N	MEDICAL GASES MC A	DC A	LA A	PA A	MV A	DHV A	DLV A	DLE A	OX A	NO A	NI A	N A	HVAC BL	AC	OA	TEMP SM	WN	RH	FL IN	FN	EX	N
XFP02	200	G	.	.	U	.	.	.	.	.	.	.	.	.	.	.	.	-	10	2.5	24	20	.	90	.	Y	M
	.	.			.												.				75	68					.
XFPC1	200	G	.	.	U	.	.	.	.	.	.	.	.	.	.	.	.	-	10	2.5	24	20	.	90	.	Y	M
	.	.			.												.				75	68					
XFSA1	500	.	.	.	.	.	.	.	.	.	.	.	.	.	.	.	.	-	10	2.5	24	20	.	.	.	Y	M
	.	.			.												.				75	68					.
XFSC1	100	.	.	.	.	.	.	.	.	.	.	.	.	.	.	.	.	0	4	2	24	20	.	.	.	.	.
	.	.			.												.				75	68					
XFSR1	500	.	.	.	.	.	.	.	.	.	.	.	.	.	.	.	.	0	4	2	26	20	.	.	.	.	.
	.	.			.												.				78	68					.
XMRC1	300	A	.	.	.	.	.	.	.	.	.	.	.	.	.	.	.	0	4	2	26	20	.	.	.	.	.
	.	.			.												.				78	68					.
XMRC2	300	.	.	.	.	.	.	.	.	.	.	.	.	.	.	.	.	0	4	2	26	20	.	.	.	.	N
	.	.			.												.				78	68					.
XMRE1	300	.	.	.	.	.	.	.	.	.	.	.	.	.	.	.	.	0	4	2	26	20	.	.	.	.	.
	.	.			.												.				78	68					.
XMRS1	300	C	.	.	.	1	.	.	.	1	.	.	.	1	.	.	.	0	4	2	26	21	.	90	.	.	.
	.	I			.												.				78	70					.
XMRV1	300	.	.	.	.	.	.	.	.	.	.	.	.	.	.	.	.	0	4	2	26	20	.	.	.	.	.
	.	.			.												.				78	68					.
XRM01	150	.	.	.	E	.	.	.	.	.	.	.	.	.	.	.	.	0	.	.	.	.	.	.	.	.	
	.	.			.												.				.	.					.
XRM02	150	.	.	.	.	.	.	.	.	.	.	.	.	.	.	.	.	0	4	2	26	20	.	.	.	.	.
	.	.			.												.				78	68					.
XTCC1	300	A	.	.	.	.	.	.	.	.	.	.	.	.	.	.	.	0	6	2	26	20	.	.	.	.	.
	.	.			.												.				78	68					.
XTCE1	300	.	.	.	.	.	.	.	.	.	.	.	.	.	.	.	.	0	6	2	26	21	.	.	.	.	.
	.	.			.												.				78	70					.
XTCT1	500	D	.	LS	.	1	.	.	.	1	.	.	.	1	.	.	.	0	6	2	26	20	.	90	.	.	.
	.	I			.												.				78	68					.
XTEM1	200	.	.	LS	.	.	.	.	.	.	.	.	.	.	.	.	.	0	6	2	26	20	.	.	.	.	.
	.	.			.												.				78	68					.

APPENDIX A
ARCHITECTURAL AND ENGINEERING DESIGN REQUIREMENTS

ROOM CODE	ROOM NAME	ARCHITECTURAL MATRL+FIN FL	WAL	CLG	CLG HT	DOOR SIZE	NOISE RM	SC	STRU FLR LOAD
XTFF1	XRAY TEACHING FILM FILES	SV	GLG	AT1	3000	1200	35	40	12
		VT	GPT	.	10-0	4-0	40		250
XTLA1	XRAY THERAPY LINEAR ACCELERATOR 6ME	SV	GLG	AT1	3000	1200	35	40	C
		VT	GPT	.	10-0	4-0	40		C
XTLA2	XRAY THERAPY LINEAR ACCEL HIGH VOLT	SV	GLG	AT1	3000	1200	35	40	C
		VT	GPT	.	10-0	4-0	40		
XTLA3	XRAY THERAPY LINEAR ACCEL DUAL VOLT	SV	GLG	AT1	3000	1200	35	40	C
		VT	GPT	.	10-0	4-0	40		
XTLB1	XRAY THERAPY PHYSICS LABORATORY	SV	GLG	AT1	2700	900	35	40	5
		VT	GPT	.	9-0	3-0	40		100
XTLC1	XRAY THERAPY LINEAR ACCEL CONTROL	SV	GLG	AT1	2400	900	35	40	5
		VT	GPT	.	8-0	3-0	40		100
XTMF1	XRAY THERAPY MOLD FABRICATION SHOP	SV	GLG	AT1	2700	900	35	40	5
		VT	GPT	.	9-0	3-0	40		100
XTRT1	XRAY THERAPY RADIUM TX STORAGE/PREP	SV	GLG	AT1	2400	900	35	40	5
		VT	GPT	.	8-0	3-0	40		100
XTSA1	XRAY THERAPY SUPERFICIAL ADD-IN	SV	GLG	AT1	2400	900	35	40	5
		VT	GPT	.	8-0	3-0	40		100
XTSC1	XRAY THERAPY SUPERF/ORTHO CONTROL	SV	GLG	AT1	2400	900	35	40	5
		VT	GPT	.	8-0	3-0	40		100
XTSC2	XRAY THERAPY SIMULATOR CONTROL ROOM	SV	GLG	AT1	2400	900	35	40	5
		VT	GPT	.	8-0	3-0	40		100
XTSE1	XRAY THERAPY SUPERF/ORTHO AUX EQUIP	SV	GLG	AT1	2400	900	35	40	5
		VT	GPT	.	8-0	3-0	40		100
XTSG1	XRAY THERAPY SIMULATOR GANTRY ROOM	SV	GLG	AT1	3000	1200	35	40	5
		VT	GPT	.	10-0	4-0	40		100
XTST1	XRAY THERAPY SUPERFICIAL/ORTHO TX	SV	GLG	AT1	2400	900	35	40	5
		VT	GPT	.	8-0	3-0	40		100
XTTP1	XRAY THERAPY TREATMENT PLANNING RM	SV	GLG	AT1	2400	900	35	40	5
		VT	GPT	.	8-0	3-0	40		100
XVC01	XRAY VIEWING/CONSULTATION AREA	SV	GLG	AT1	2400	900	30	40	3
		VT	GPT	.	8-0	3-0	35		60

APPENDIX A
ARCHITECTURAL AND ENGINEERING DESIGN REQUIREMENTS

ROOM CODE	ELECTRICAL LIGHT LEV	N	EM PWR PWR	LT	N	MEDICAL GASES MC	DCA	LA	PA	MV	DHV	DLV	LDE	OX	NO	NI	N	HVAC BL	AC	OA	TEMP SM	WN	RH	FL IN	FN	EX	N
XTFF1	300	.	.	LS	.	.	.	.	.	.	.	.	.	.	.	.	.	0	6	2	26	20	.	.	.	.	.
	.	.			.												.				78	68					.
XTLA1	500	D	.	LS	.	1	.	.	.	1	.	.	.	1	.	.	.	0	6	2	26	20	.	90	.	Y	.
	.	I			.												.				78	68					.
XTLA2	500	D	.	LS	.	1	.	.	.	1	.	.	.	1	.	.	.	0	6	2	26	20	.	90	.	Y	.
	.	I			.												.				78	68					.
XTLA3	500	D	.	LS	.	1	.	.	.	1	.	.	.	1	.	.	.	0	6	2	26	20	.	90	.	Y	.
	.	I			.												.				78	68					.
XTLB1	500	C	.	.	.	.	.	.	.	.	.	.	.	.	.	.	.	-	6	2	26	21	.	.	.	.	.
	1100	.			.												.				78	70					.
XTLC1	300	A	.	.	.	.	.	.	.	.	.	.	.	.	.	.	.	0	6	2	26	20	.	.	.	.	.
	.	.			.												.				78	68					.
XTMF1	500	.	.	.	.	.	.	.	.	.	.	.	.	.	.	.	.	-	6	2	26	20	.	.	.	Y	.
	.	.			.												.				78	68					M
XTRT1	500	C	.	.	.	.	.	.	.	.	.	.	.	.	.	.	.	-	6	2	26	20	.	80	.	Y	.
	1100	.			.												.				78	68					M
XTSA1	500	.	.	LS	.	.	.	.	.	.	.	.	.	.	.	.	.	0	6	2	26	20	.	.	.	.	.
	.	.			.												.				78	68					.
XTSC1	300	A	.	LS	.	.	.	.	.	.	.	.	.	.	.	.	.	0	6	2	26	20	.	.	.	.	.
	.	.			.												.				78	68					.
XTSC2	300	A	.	.	U	.	.	.	.	.	.	.	.	.	.	.	.	0	6	2	26	20	.	.	.	.	.
	.	.			.												.				78	68					.
XTSE1	200	.	.	LS	E	.	.	.	.	.	.	.	.	.	.	.	.	0	6	2	26	20	.	.	.	.	.
	.	.			.												.				78	68					.
XTSG1	300	.	.	.	.	1	.	.	.	1	.	.	.	1	.	.	.	0	6	2	26	21	.	.	.	.	.
	.	.			.												.				78	70					.
XTST1	500	C	.	.	.	1	.	.	.	1	.	.	.	1	.	.	.	0	6	2	26	21	.	.	.	.	.
	.	.			.												.				78	70					.
XTTP1	500	.	.	.	.	.	.	.	.	.	.	.	.	.	.	.	.	0	6	2	26	21	.	.	.	.	.
	.	.			.												.				78	70					.
XVC01	300	.	.	.	.	.	.	.	.	.	.	.	.	.	.	.	.	0	4	1	26	20	.	.	.	.	.
	.	.			.												.				78	68					.

APPENDIX A
ARCHITECTURAL AND ENGINEERING DESIGN REQUIREMENTS

ROOM CODE	ROOM NAME	ARCHITECTURAL MATRL+FIN FL	WAL	CLG	CLG HT	DOOR SIZE	NOISE RM	SC	STRU FLR LOAD
XVCC1	XRAY VIEWING/CONSULTATION CINE	SV	GLG	AT1	2400	900	30	40	3
		VT	GPT	.	8-0	3-0	35		60
XXXX1	HYPERBARIC CHAMBERS RM	VT	GPT	AT1	VAR	1200	30	40	5
		.	..	.	VAR	4-0	35		100
XXXX2	AIR HANDLING ROOMS	CS	SSP	SSP	VAR	VAR	50	55	6
		.	..	.	VAR	VAR	70		125
XXXX3	CENTRAL PLANT ROOMS	CS	SSP	SSP	VAR	VAR	50	55	12
		.	..	.	VAR	VAR	70		250
XXXX4	MECHANICAL ROOMS	CS	SSP	SSP	VAR	VAR	50	55	B
		.	..	.	VAR	VAR	70		B

APPENDIX A
ARCHITECTURAL AND ENGINEERING DESIGN REQUIREMENTS

ROOM CODE	ELECTRICAL LIGHT LEV	N	EM PWR PWR	LT	N	MEDICAL GASES MCA	DCA	LA	PA	MV	DHV	DLV	LDE	OX	NO	NI	N	HVAC BL	AC	OA	TEMP SM	WN	RH	FL IN	FN	EX	N
XVCC1	300	.	.	.	.	.	.	.	.	.	.	.	.	.	.	.	.	0	4	1	26	20	.	.	.	.	.
	.	.			.												.				78	68					.
XXXX1	300	.	RA	LB	.	.	.	.	.	.	.	.	.	.	.	.	.	0	4	1	26	20	.	.	.	.	.
	.	.			.												.				78	68					.
XXXX2	300	.	.	.	S	.	.	.	.	.	.	.	.	.	.	.	.	-	.	.	.	10	.	.	.	.	.
	.	.			.												.				.	50					.
XXXX3	300	.	.	.	S	.	.	.	.	.	.	.	.	.	.	.	.	-	.	.	.	10	.	.	.	.	.
	.	.			.												.				.	50					.
XXXX4	300	.	.	.	S	.	.	.	.	.	.	.	.	.	.	.	.	-	.	.	.	10	.	.	.	.	.
	.	.			.												.				.	50					.

APPENDIX A
ARCHITECTURAL AND ENGINEERING DESIGN REQUIREMENTS

ROOM CODE	ROOM NAME	ARCHITECTURAL MATRL+FIN FL	WAL	CLG	CLG HT	DOOR SIZE	NOISE RM	SC	STRU FLR LOAD

APPENDIX B: DESIGN SUBMITTALS AND DOCUMENTATION

B.1 Block Plan Submittal (S-1). Block Plans shall include at least three substantially different alternative design solutions. The intent is to either select one of the three schemes or develop a composite scheme for room-by-room floor plan development in S4. Each block plan will show building massing, siting, and the layout of the gross function areas (blocks) within the building. Although not normally required, DMFO may be included in the review process where size or complexity warrants early participation or DMFO requests to participate. The following are the suggested requirements for the Block Plan effort:

B.1.1 Site plans of each scheme showing existing and proposed structures, topography, utilities, roads, and parking.

B.1.2 Floor plans for each scheme showing each level with circulation patterns and principal dimensions. On addition/alteration projects, existing versus new conditions must be clearly delineated.

B.1.3 Gross area tabulation of floor area, along with small scale, single-line, dimensioned drawings, to reflect the total space required in Figure 2-7 format.

B.1.4 Preliminary cost estimate for each scheme.

B.1.5 Narrative description of each scheme and scheme comparisons explaining strong and weak points of each solution and the rationale for the recommended solution. The following features must be addressed for each scheme: expandability, flexibility, proposed structural system, proposed mechanical system(s), electrical system, energy conservation features, net-to-gross ratio, phasing, and initial constructability considerations.

B.1.6 Site investigation report will address the existing and proposed conditions on and near the site including: demolition requirements (if any), topography, adjacent facilities, site vegetation, access roads, easements, safety clearances, site acoustics, parking (existing and proposed), soil conditions, floodplains or wetlands criteria, asbestos and hazardous waste on-site, and energy considerations such as building orientation, solar access, and prevailing wind conditions. Provide a summary of any environmental impact studies, base master plans and base architectural plans where available. Provide photographs of the site and nearby structures.

B.1.7 Site utilities report will address: storm drainage, sewer, water (potable and fire protection), gas, central heating and cooling, electricity, telephone, fire alarm, and communications. Address the quality and capacity of the existing utilities to serve the proposed project and any demolition required.

B.1.8 Economic Analyses (EA) of new versus addition/alteration where requested by DMFO, or update(substantiation) previous EA.

B.1.9 Pencil sketch perspectives for each proposed solution.

B.1.10 A massing model of each solution, particularly addition/alteration projects where "new" and "addition" versus existing

must be clearly defined.

B.1.11 Updating or verification of as-built and/or as-utilized drawings in addition-alteration projects may be required as directed by the Design Agent.

B.1.12 The narrative portion of the submittal, calculations, cost estimate, and reports shall be on 8-1/2 x 11 inch sheets packaged in a standard U.S. 3-ring binder with labeled subject dividers, sequential page numbers, and table of contents.

B.2 Schematic Design Submittal (S-2). This submittal includes development of the room-by-room floor plans, elevations, and initial analysis of the major architectural and engineering systems based on the selected (or composite) block plan from S-1. The primary purpose of this submittal and review is to identify and resolve all major space program deficiencies at an early stage in design, develop the massing and aesthetics of the facility, and "fix" the scope of the building. The Design Agent, using Military department representatives, and A-E, if required, will present the reviewed S-2 to DMFO. Requests for scope revisions with justification should be submitted at this time. Scope changes will not be entertained after approval of S-2 unless fully justified. DMFO will provide approval/disapproval, with review comments, within 14 days of the presentation. The following are the minimum DMFO requirements for S-2:

B.2.1 Executive Summary of the following:

- various Block Plan alternatives from S-1, and rationale for the selected scheme. The primary block plan drawings from S-1 shall be included as double-page, fold-out, reduced drawings.

- summary of the narrative describing various proposed architectural and engineering aspects of the projects.

B.2.2 Site plans showing building location, future expansion, and existing and proposed structures, topography, utilities, roads and parking.

B.2.3 Floor plans for each floor showing all programmed spaces, corridors, structural grid system (including columns), electrical and mechanical equipment rooms, and stairs/elevators/escalators to meet the functional requirements. All spaces must be labeled with the room name, the room code from the DMFO Program For Design (PFD), and the programmed and designed net areas. For addition/alteration projects, preliminary demolition drawings, with photographs to depict conditions are required.

B.2.4 Plans showing major circulation paths in and around the facility, for significant projects, only.

B.2.5 A separate plan of the blast hardened/CBR protected area, if programmed, showing how the spaces would be utilized during contingency operations.

B.2.6 Exterior elevations and major building sections appropriate to the level of Concept Design development. To assure Post or Base compatibility, observe and document the physical features of the site and

the character/style of any surrounding building(s).

B.2.7 Refined massing model, from S-1, as required.

B.2.8 A comprehensive narrative describing various proposed architectural and engineering aspects of the projects as follows:

B.2.8.1 Civil Design Narrative. Include site investigation and utilities reports based on further refinement of the S-1 requirements;

B.2.8.2 Architectural Design Narrative. Address the overall architectural concept including: Exterior wall systems and finish materials being considered, (develop alternative exterior materials and wall assemblies, compare each exterior wall scheme by both qualitative and quantitative analysis and include energy-conscious design considerations; prepare dew point calculations following recommended design procedures in the ASHRAE Handbook of Fundamentals; acoustics, base architectural plan, floor-to-floor heights, proposed roofing materials, slope(s), styles, contingency and mobilization features, energy conservation features, life safety, and fire protection features, and Uniform Federal Accessibility Standards (UFAS) compliance;

B.2.8.3 Structural Design Narrative. Alternative Structural Systems. A minimum of three structural systems shall be thoroughly evaluated and submitted with a recommended selection of a structural system based on an economic study. The structural system selected shall be the one which best combines economy and suitability regarding functionality, design systems, space configuration, architectural features and seismic (Section 6) resistance configuration for the specific project. The comparative study shall address the cost of foundations and superstructure as well as appropriate cost factors for architectural, fire protection, mechanical, electrical, and seismic conditions where these vary between structural systems. Some structural systems are more compatible than others with the architectural, horizontal flexibility, fire protection, mechanical, electrical, and seismic requirements for facilities. Structural systems shall be evaluated within this context to determine penalties or advantages of alternate designs. Narrative justification, describing the basis for system selection, along with drawings of the selected structural system adequately developed so that no additional major engineering decisions are required, shall be provided. The economic study shall employ a method which considers all factors and requirements of the system's total life cycle costs. The method employed shall incorporate cost per unit of area, erection time, compatibility with other systems, nonstructural flexibility, lateral load resistance, noise attenuation and the natural vibration period of the structure, when applicable. For facilities two stories or greater located in regions of high or moderate seismic risk, as determined in Section 6, at least one structural system that includes components that provide base isolation or active or passive energy dissipation should be included as a structural system alternative.

B.2.8.4 Seismic Design Narrative. Summarize the seismic design considerations including "I" and "K" values and the level of protection required. Discuss post-earthquake operation requirements;

B.2.8.5 Heating, Ventilation, and Air Conditioning (HVAC) Design Narrative. Discuss design considerations and space requirements for the primary and secondary HVAC systems being considered. Provide a written

description of the anticipated smoke control system, passive or active. If an Engineering Smoke (EMCS) is planned, provide a discussion on economics justification;

B.2.8.6 Plumbing Design Narrative. Discuss design considerations and space requirements for the various plumbing systems, including domestic hot and cold water, fuel gas, medical gases, sanitary waste, acid waste, and storm drains. Discuss water supply, quality, required storage, and distribution systems. Discuss hot water generation, storage, temperatures, and distribution systems. Address various types of medical gases, storage, and distribution systems;

B.2.8.7 Electrical Design Narrative. Discuss design considerations and space requirements for electrical systems. Address the following: voltage, routing, and reliability of primary services; connected and demand load; normal and essential electrical system; emergency power; lighting systems; and energy conservation features;

B.2.8.8 Communication Design Narrative. Discuss design considerations and space requirements for the following: telephone, intercom, dictation, paging, public address, televisions, nurse call, Comprehensive Healthcare [Computer] Systems (CHCS), data communication, and security systems; uninterruptible power supply (UPS);

B.2.8.9 Fire Protection Design Narrative: Address the following: type of construction, fire rating of materials, occupancy classification, fire detection, alarm, and suppression systems. Provide a summary of the latest Fire Safety Evaluation System Study for addition/alteration projects;

B.2.8.10 If IBS is planned for other than medical centers/teaching hospitals, provide an expanded justification;

B.2.8.11 If an Engineered Smoke Control System (ESCS) or an Energy Monitoring and Control System (EMCS) is planned, provide an economic justification; and

B.2.8.12 Construction Phasing Narrative. For addition/ alteration projects, provide a narrative description of the proposed Construction Phasing to evaluate the continued/uninterrupted operation of the existing facility during construction and the associated impact on the construction cost. Identify requirements for temporary buildings to serve as swing space during the construction and the cost associated with these buildings.

B.2.9 Gross area tabulation of floor area, along with a small scale, single-line, dimensioned key plan, to reflect the total space required in Figure 2-5 format.

B.2.10 Net area tabulations, including net to gross calculations, in Figure 2-6 format.

B.2.11 A net-to-gross area conversion summary comparing the as-designed condition with the applicable net-to-gross square feet allowances in Figure 2-8.

B.2.12 Updated cost estimate.

B.2.13 The narrative portion of the S-2 submittal, calculations, and cost estimate shall comply with paragraph B.4.2.

B.3 Design Development Submittal (S-3). This submittal is about 30 percent of the total design effort in all disciplines and includes further development of DMFO-approved S-2 submittal. The purpose of this submittal is to finalize all major design/engineering decisions and to validate project scope and cost. DMFO does not normally review this submittal; however, if the design is developed well enough, it may be submitted to DMFO as the S-4. The following are minimum requirements for this submission:

B.3.1 An update of all requirements in the S-2 Submission.

B.3.2 An Executive Summary (in addition to the other submittal requirements) to include design intent, proposed architectural engineering systems, results of VE study, phasing plans, costs, scope, and a general description of the project. Include sufficient detail to provide an overview of the project. The Executive Summary shall either be bound separately for hospital type projects or shall be included as a separate chapter in the Design Analysis for other medical projects.

B.3.3 Plans showing design in sufficient detail to allow for an in-depth review and a reliable cost estimate. As a minimum, provide the following:

B.3.3.1 Site plans showing building location, future expansion, existing and proposed structures, topography, utilities, roads, parking, and landscaping;

B.3.3.2 Floor plans for each floor showing all programmed spaces, corridors, structural grid system (including columns), electrical/communications/ mechanical equipment rooms, and stairs/elevators/escalators to meet the functional requirements. All spaces must be labeled with the room name, the room code from the DMFO program for design, and the programmed and designed net areas;

B.3.3.3 All exterior elevations and major building sections;

B.3.3.4 Reflected ceiling plans showing ceiling grid and light fixture placement;

B.3.3.5 Equipment plans showing all category A, B, C, D, E, F, and G equipment. Show Category A, B, and E equipment on the equipment drawings and floor plans with solid lines and Category C and F equipment with dashed lines. Provide Joint Schedule Numbers (JSN) as indicated in the Medical Facility Room Contents List (MFRCL) for all applicable logistical categories. The Joint Schedule Numbers (JSN) or the National Stock Numbers (NSN), within the MIL-STD 1691, shall not be used as substitutes for contract specifications and detail drawings. Citing JSN numbers and nomenclatures will not relieve the designer of the responsibility to verify and provide all necessary detail drawings and specifications showing actual dimensions, utility connections, accessories, quantity,

quality, and performance required. Where reference to a specification is included in a JSN item description, items identified as Category "A" in "CAT" column shall be procured against the latest authorized specification or purchase description. Designers shall assure that current specifications and their latest amendments or purchase description shall be used in the procurement of equipment supplied by the Construction Contractor.

B.3.3.6 HVAC plans showing layout of mechanical rooms and one line drawing of distribution systems. Provide schematic diagrams of the major supply, return, and exhaust systems;

B.3.3.7 Plumbing plans showing plumbing, medical air, vacuum, and medical gas equipment and major distribution lines including riser diagrams;

B.3.3.8 Electrical plans showing electrical room layouts, light fixture locations, receptacle locations, motor controls, and locations of panelboards and distribution equipment. Provide single line diagrams of the normal/ essential electrical systems,emergency power, and UPS;

B.3.3.9 Communication plans showing location of communication equipment and devices. Show layout of communication closets and provide single line diagram for each system;

B.3.3.10 Fire protection plans showing sprinklered areas, fire rated walls and doors, smoke compartmentation, fire pumps, stand pipes, fire extinguisher cabinets, fire alarm, and fire exits.

B.3.3.11 For addition/alteration projects, preliminary demolition drawings indicating the removal of structural, architectural, mechanical/electrical/communications systems, asbestos and hazardous materials. Photographs are desirable to accurately communicate existing conditions.

B.3.4 A comprehensive narrative describing various architectural and engineering systems being considered:

B.3.4.1 Civil Design Narrative. Include the site investigation and utilities reports based on further refinement of the S-2 requirements. Summarize the civil design parameters, parking, and the major features of the design;

B.3.4.2 Architectural Design Narrative. Address the overall architectural concept including: interior (in accordance with Appendix A) and exterior finish materials (to include proposed Structural Interior Design (SID) color scheme/selections, see para 4.14), wall systems, roofing systems, acoustics, base architectural plan, floor-to-floor heights, contingency and mobilization features, energy conservation features, life safety, UFAS, and fire protection features;

B.3.4.3 Structural Design Narrative. Address the alternative structural foundation and framing systems considered and provide economic basis for system selection. Address long-span versus other alternatives and concrete versus steel structure. Summarize the structural design parameters and the major features of the design;

B.3.4.4 Seismic Design Narrative. Summarize the seismic design considerations including "I" and "K" values and the level of protection required. Discuss post-earthquake operation requirements. Summarize the structural design parameters and the major features of the design;

B.3.4.5 Heating, Ventilation, and Air Conditioning (HVAC) Design Narrative. Provide a summary of the primary and secondary HVAC systems considered and the economic basis for system selection. Summarize the proposed control systems, fire protection features, and the energy conservation features being considered;

B.3.4.6 Plumbing Design Narrative. Describe the various plumbing systems, including domestic hot and cold water, fuel gas, medical gases, sanitary waste, acid waste, and storm drains. Discuss water supply, quality, required storage, and distribution systems. Discuss hot water generation, storage, temperatures, and distribution systems. Address various types of medical gases, storage, and distribution systems;

B.3.4.7 Electrical Design Narrative. Summarize the electrical design parameters and the major features of the design. Address the following: voltage, routing, and reliability of primary services; connected and demand load; normal /essential/emergency electrical system; lighting systems; and energy conservation features;

B.3.4.8 Communication Design Narrative. Summarize the communication systems design parameters and the major features of the design. Discuss the following: telephone, intercom, dictation, paging, public address, television, nurse call, CHCS, data communication, and security systems;

B.3.4.9 Fire Protection Design Narrative: Summarize the fire protection systems design parameters and the major features of the design. Address the following: type of construction, fire rating of materials, occupancy classification, fire detection, alarm, and suppression systems. Provide a summary of the latest Fire Safety Evaluation System Study for addition/alteration projects;

B.3.4.10 Integrated Building System (IBS) Narrative. If IBS was approved at S-2, provide a summary of the IBS design parameters and the major features of the design;

B.3.4.11 Engineered Smoke Control System (ESCS) narrative. If an ESCS or an Energy Monitoring and Control System (EMCS) was approved at S-2, provide a summary of the ESCS/EMCS design parameters and the major features of the design;

B.3.4.12 Energy Conscious Design Narrative. Discuss all energy conscious design considerations implemented and considered for the design. Address all design disciplines that affect energy consumption. In addition, address the following: siting, orientation, solar access, and climatic influences; conservation (systems selection, etc.); renewable energy features (passive solar/daylighting, active solar, etc.); energy budget compliance; energy conscious design summary and other important energy design issues. The feasibility of total or selective energy systems shall be evaluated;

B.3.4.13 Food Service Narrative (when applicable). Summarize the food service systems design parameters and the major features of the design.

Discuss the various systems considered and the economic basis for the system selections;

B.3.4.14 Materials Handling and Transportation Systems Narrative (when applicable). Summarize the materials handling and transportation systems design parameters and the major features of the design. Include escalators, elevators, cart lifts, automatic box conveyor systems, dumb-waiters, linen and trash chutes, pneumatic tubes, etc. The study is to include equipment requirements life-cycle-costs, maintenance, appearance, ease of operation, noise, security, maintainability, and availability in a competitive marketplace for each system;

B.3.4.15 Waste Handling Systems Narrative. Summarize the waste handling systems design parameters and the major features of the design. Address trash removal; hazardous, infectious, and biological waste; retort sterilizers; incinerators; and other waste handling features of the design; and

B.3.4.16 Security Systems Narrative. Summarize the security systems design parameters and the major features of the design.

B.3.5 Detailed Cost Estimate.

B.3.6 An updated DD Form 1391 reflecting the reviewed cost estimate, any changes to the project description, and justification.

B.3.7 Gross area tabulation of floor area, along with small scale, single-line, dimensioned drawings, to reflect the total space required in Figure 2-5 format.

B.3.8 Updated net area tabulations, including net to gross calculations, in the format of Figure 2-6.

B.3.9 Outline specifications showing basic intent.

B.3.11 Room finishes schedule keyed to the plans by room number and name. Provide color boards with samples of major finishes.

B.3.12 Equipment list showing all category A, B, C, D, E, F and G equipment for each room keyed to the plans by room number and name. Provide equipment data sheets for all equipment that requires utility connections. The AE must develop the initial official project MFRCL into a viable room-by-room listing. Coordinate substitutions or changes with the using Military Department. The type, quantity, and location of biological, radioisotope, fume, canopy, and laminar air hoods shall also be indicated in the equipment list. Provide an appropriate catalog cut sheet(s) for all items of equipment having a logistical category code of A, B, E, or F and any C and G items having unique utility requirements, structural support, or space requirements.

B.3.13 A pencil sketch perspective drawing depicting the proposed structure. This sketch will be critically reviewed as the basis for the subsequent rendering requirement. This requirement does not apply to projects which are primarily life safety code upgrade and minor additions.

B.3.14 Finalized model (if required by the Design Agent) , showing the site, site circulation, parking, massing of structure, and a delineation

between new and existing if the project contains additions and/or alteration.

B.3.15 The narrative portion of the submittal, calculations, and cost estimate shall be packaged in standard U.S. 3-ring binders with labeled subject dividers, sequential page numbers, and table of contents.

B.3.16 Value Engineering Study (VE). Conduct Value Engineering (VE) study during design following the S-3 submission in accordance with DoD Directive 4245.8. Value Engineering Studies consist of investigations of certain high-cost areas in a design to determine if an alternate way exists to achieve an improved design at a lower life-cycle-cost. The main objectives of VE studies are reduced life-cycle-cost and improved quality of design. The application of Value Engineering shall not result in lowering criteria or quality standards as established by the guidance in this document or reduction in the scope of the project.

B.4 35 Percent Design Submittal (S-4). This submittal is as a minimum 35 percent of the total design effort in all disciplines and includes a corrected and refined S-3 package based on the S-3 review. The reviewed S-4 will be submitted to DMFO by the Design Agent and the using Military Department. A-E participation may be required on large or complex projects. Final scope and PA (cost) shall be determined with this submission. The minimum requirements of this submission are the same as described for S-3 and a copy of the VE Study.

B.4.1 This is considered the "technical submission" and all issues regarding costs, Value Engineering Study (VE), constructability, phasing, and any other special studies must be resolved, though the results of all studies may not be incorporated prior to presenting this submission to DMFO for approval. Action taken on Value Engineering proposals must be included with this submission.

B.4.2 The narrative portion of the submittal, calculations, and cost estimate shall be packaged in standard U.S. 3-ring binders with labeled subject dividers, sequential page numbers, and table of contents. Drawings shall be at a minimum 1:100 SI (1/8 inch scale); however 1:50 SI (1/4 inch) scale may be necessary for clarity on equipment plans, mechanical and electrical equipment room layouts, complex rooms or departments, interior elevations. Full-size or half-size drawings will be provided as stipulated in the distribution schedule.

B.4.3 Rendering. A final rendering is prepared after 35 Percent Design Submission approval. A color photograph of the original rendering, aproximately 5OO mm X 400 mm (20 x 16 inch) in a 700 mm X 500 mm (28 x 20 inch) brushed aluminum frame shall be sent to DMFO. The photograph is to reflect the 35 percent review comments and be titled, matted, framed, and glazed with nonglare tempered glass or plexiglas. Other photographs are to be distributed as scheduled by the Design Agent in coordination with the using Military Department at the prenegotiation conference.

B.5 Final Design (35 percent to 100 percent). The final design phase may be initiated only after approval of Concept Design by the DMFO. If, in the preparation of Contract Documents (CD's), it is necessary to deviate substantially from the approved Concept Design, such as the rearrangement of a major medical department or a change in the

interrelationship of functional elements, design may be suspended and the pertinent facts and justifications concerning the deviations will be submitted for review and approval by DMFO.

B.5.1 Contract Documents (CD's). Final working drawings shall be prepared only to the scale necessary for clarity, good bidding, and ease of constructability. Where dictated by complexity, CD's shall be drawn to 1/4-inch to the foot. To reduce the sheer volume of production drawings, those areas and disciplines not requiring 1/4 scale drawings for bidding shall be prepared at 1/8 scale.

B.5.2 Comprehensive Interior Design (CID). The final design phase, at option of using Military Department, may include a Comprehensive Interior Design (CID) effort for furniture and accessory selection, layout and identification, and documentation for procurement. The Comprehensive Interior Design (CID) package is to be coordinated with the interior finishes and colors Structural Interior Design (SID) early in the final design phase so that the first submittal of the CID will be fully coordinated with the building design at S-5. Subsequent selections of furnishings and medical equipment are to be coordinated with the CID. See Glossary, para 4.14, and para 4.17 for expanded definitions of CID and SID.

B.5.3 65 Percent Submittal (S-5). On a case-by-case basis, DMFO may request submission of 65 Percent Preliminary Working Drawings. The Design Agent, with the participation of the using Military Service, may develop the specific submittal requirements to define the S5 level of design effort.

B.5.3.1 Comprehensive Fire Protection Design. All fire protection provisions shall be summarized and submitted as a separate plan supported by a fire protection design analysis, including fire protection drawings developed during the Concept phase of the design. The fire protection study shall include related design considerations and criteria that have been coordinated among all the affected disciplines and shall serve as the basis for the design, construction, and future operation of the building. If required by the Design Agent, a completed Statement of Construction will be provided at the completion of construction by the contractor.

B.5.3.2 Equipment Specifications. The AE shall develop specifications for all equipment that does not have current guide specifications. Update the specifications to permit procurement of the latest model of equipment. Develop the specifications to accommodate at least three reputable vendors of the same type equipment when practicable. Coordinate problem items with the using Military Department. Include the scope of services to be provided by mechanical and electrical contractors for installing government furnished equipment. The Joint Schedule Numbers (JSN) or the National Stock Numbers (NSN), within the MIL-STD 1691, shall not be used as substitutes for contract specifications and detail drawings. Citing JSN numbers and nomenclatures will not relieve the designer of the responsibility to verify and provide all necessary detail drawings and specifications showing actual dimensions, utility connections, accessories, quantity, quality, and performance required. Where reference to a specification is included in a JSN item description, items identified as Category "A" in "CAT" column shall be procured against the latest authorized specification or purchase description. Designers shall assure that current specifications and their latest amendments or purchase

description shall be used in the procurement of equipment supplied by the Construction Contractor.

B.5.4 100 Percent/Final Submittal (S-6). When the design is complete, the Design Agent will submit a copy of the final documents (i.e. drawings, specification, cost estimate, instructions to bidders, etc.) to DMFO. Along with this package, the Design Agent shall provide a memorandum to DMFO certifying that the design has been completed and that all technical requirements and cost criteria approved at the 35 Percent Design stage have been incorporated into the Final Design.

APPENDIX C: UNIVERSAL X-RAY ROOM

C.1 Definition of Universal X-Ray Room. "The universal X-ray room shall be capable of accepting all routine radiographic, fluoroscopic, and tomographic equipment, up to 1200 ma, 150 kvp, regardless of manufacture, during initial installation and subsequent replacement actions with little, if any, facility modification. The procedures shall be performed unencumbered and without any restriction of system components, patient size, or any known procedure that any installed X-ray equipment can perform now or in the future." This definition does not apply to digital radiography, special procedure rooms, C-arms, or angiography rooms.

C.2 Criteria.

C.2.1 Planning and Programming. The universal room shall be a maximum of 28 net m^2 (300 net square feet) including space for equipment, control booth, and circulation. Critical room dimensions and layouts are given in Figure C-1. Utilities distribution methods may be modified for use in projects utilizing IBS concepts when implemented (see Section 19).

C.2.2 Electrical Raceway System. An extensive raceway system is provided so the universal room will accept any manufacturer's equipment without additional raceways, facility modifications, or use of exposed wiring. The raceway system consists of trench floor ducts, lay-in wall ducts, and ceiling cable trays as shown on Figure C-1 and C-2.

C.2.2.1 Floor ducts are bottom-type trench duct, with nominal 90 mm (3.5 in.) by 300 mm (12 in.) 250 mm (10-inch) tub with a 300 mm (12-inch) wide, 8 mm (1/4-inch) thick steel cover plate. Cover plate must be installed flush with and have the same tile insert as the floor. Provide a gasket on the cover plate to maintain water tightness.

C.2.2.2 Wall ducts are nominal 10 mm (3.5 in.) by 250 mm (10 in.) with 300 m (12-inch) wide flush mounted cover plates finished to match the walls. Wall duct must be UL listed for enclosure of wiring to x-ray machines (reference C-a).

C.2.2.3 Ceiling cable trays are nominal 10 mm (3.6 in.) by 300 mm (12 in.) 80 mm (3-inch) load depth NEMA Class 12A ladder type installed above the finished ceiling. Wall duct, nominal 10 mm (3.5 in.) by 250 mm (10 inch), may be used in lieu of cable trays.

C.2.2.4 Partitions must be provided in all ducts and cable trays to separate high and low voltage cables.

C.2.3 Electrical Service Requirements. Each universal room must have adequate power service to insure that all X-ray equipment can be installed without additional facility related electrical work. All feeder conductors will be copper.

C.2.3.1 Power Quality. The facility power system must provide the specified nominal voltage (480 V or 240 V) plus or minus 5 percent to each universal room. Special power conditioning equipment, if required, should be identified and provided with the X-ray installation.

C.2.3.2 Three-Phase Rooms. If the room will receive three-phase X-ray equipment, provide 150 amp, 480 volt, three-phase (3-wire and ground) service to the room. Provide an adjustable trip, 150 amp, 3-pole, shunt trip circuit breaker in a NEMA 1, flush mounted enclosure.

C.2.3.3 Single-Phase Rooms. If the room will receive single-phase X-ray equipment, provide 150 amp, 240 volt, single-phase (3-wire and ground) service to the room. Provide an adjustable trip, 100 amp, 2-pole, shunt trip circuit breaker in a NEMA 1, flush mounted enclosure.

C.2.3.4 Emergency Shutdown. Provide a large, clearly identified push-button to actuate the shunt trip circuit breakers, and disconnect all power to the X-ray machine and accessories.

C.2.3.5 120/208 Volt Auxiliary Panelboard. If required by using Military Department, provide a 120/208 volt, single-phase, 100 amp panelboard with a 50 amp shunt trip main breaker to support the single-phase loads in each room. Provide a 20-pole-space panelboard with at least two 20 amp 2-pole circuit breakers, and five 20 amp 1-pole circuit breakers. This panelboard may be served from the nearest general purpose 120/208V transformer; a dedicated stepdown transformer may be provided and fed from the 480V service in 3-phase rooms. (Calculations should be based on 180 amp maximum demand for 3-phase rooms, and 300 amp maximum demand for single-phase rooms.)

C.2.3.6 Voltage Drop and Regulation. Total voltage drop in a branch circuit and feeder conductors must not exceed 2 percent from the facility distribution transformer to the X-ray rooms. Total voltage regulation of the distribution transformer, feeder, and branch circuit conductors must not exceed 5%. For circuits which serve only one room, calculations should be based on the maximum demand current of the single X-ray generator. For circuits which serve more than one room, calculation should be based on the maximum demand current of the two largest rooms. (Calculations should be based on 180 amp maximum demand for 3-phase rooms and 300 amp maximum demand for single-phase rooms.)

C.2.3.7 Distribution Transformers. Distribution transformers should not be dedicated solely to X-ray equipment. The voltage regulation is better if X-ray machines are connected to transformers which are partially loaded with other equipment. X-ray machines should always be connected line-to-line, never line-to-neutral.

C.2.3.8 Essential Power. Essential power for X-ray equipment, illumination, and duplex receptacles shall be in accordance with the

using Military Department guidance documents.

C.2.4 Warning Lights, Interlocks, and Illumination. Warning lights, interlocks, and illumination are to be provided in accordance with the Design Agent's guidance documents.

C.2.5 Structural Requirements.

C.2.5.1 Walls. Provide studs on either side of the vertical electrical raceways. Design walls to support 100 kg (220 pounds) vertical-to-horizontal pull. Double walls must be provided between adjacent x-ray rooms.

C.2.5.2 Ceiling Support System. Provide an overhead tube-mount support system in accordance with Figure C-3 with a load bearing capacity of 408 kg (900 pounds) vertical point load and 23 kg (50 pounds) per square foot uniformly distributed load. Spanning members should be mounted perpendicular to the centerline of the X-ray table and positioned at 650 mm (25-5/8) inches on center to provide 600 mm (2 feet) clear between members. The acoustical ceiling tiles are to be suspended from the structural grid. Bottom of members should be flush with the finished ceiling.

C.2.6 Case Work.

C.2.6.1 Case work shall be as specified by the using Military Department.

C.2.6.2 A hand sink with hot and cold water and drain will be provided.

C.2.7 Radiology Shielding.

C.2.7.1 As a minimum:

a) Comply with the design requirements of NCRP Report No.49 (reference C-b), and certify as advised by NCRP Report No.102 (reference C-c.) and by the using Military Department Procedures.

b) Lead shielding shall be 3 mm (1/16 inch) lead or lead equivalent up to 2100 mm (7 feet) above the finished floor. Penetrations through the shielding should be avoided.

c) Where possible, lead shielding shall be applied to exterior side of wall partitions, i.e., laminated behind gypsum board for protection.

C.2.7.2 Use of modular shielding for operator's booth is permitted.

C.2.7.3 All ductwork, grilles, registers, and diffusers shall be

located at a height higher than 2100 mm (7 feet) clear above the finished floor. Thermostat transmission lines shall be routed to avoid penetration of shielding.

REFERENCES

C-a. Underwriters Laboratories (UL), Electrical Construction Materials Directory, (current edition).

C-b. National Council on Radiation Protection and Measurements (NCRP), Report No.49, "Structural Shielding Design and Evaluation for Medical Use of X Rays and Gamma Rays of Energies Up to 10 Mev (1976)." NCRP Publications, 7910 Woodmont Avenue, Suite 1016, Bethesda, MD 20814.

C-c. National Council on Radiation Protection and Measurements (NCRP), Report No. 102, "Medical X-Ray, Electron Beam and Gamma-Ray Protection For Energies Up to 50 Mev (Equipment Design, Performance and Use) (1989)." NCRP Publications, 7910 Woodmont Avenue, Suite 1016, Bethesda, MD 20814.

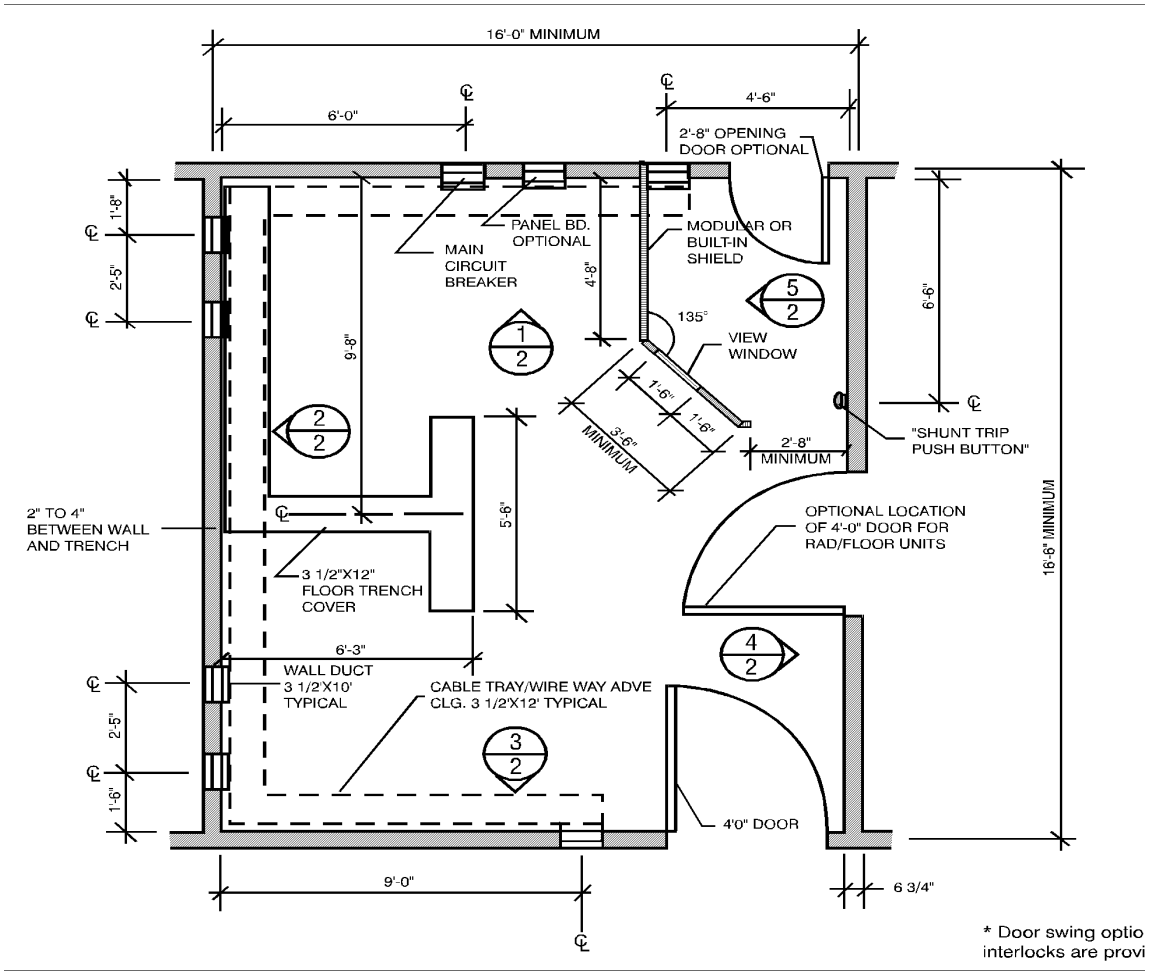
16'-0" MINIMUM
6'-0"
4'-6"
2'-8" OPENING
DOOR OPTIONAL
1'-8"
2'-5"
PANEL BD.
OPTIONAL
MAIN
CIRCUIT
BREAKER
MODULAR OR
BUILT-IN
SHIELD
4'-8"
9'-8"
135°
VIEW
WINDOW
6'-6"
1'-6"
1'-6"
3'-6"
MINIMUM
2'-8"
MINIMUM
"SHUNT TRIP
PUSH BUTTON"
2" TO 4"
BETWEEN WALL
AND TRENCH
5'-8"
OPTIONAL LOCATION
OF 4'-0" DOOR FOR
RAD/FLOOR UNITS
16'-6" MINIMUM
3 1/2"X12"
FLOOR TRENCH
COVER
6'-3"
WALL DUCT
3 1/2'X10'
TYPICAL
CABLE TRAY/WIRE WAY ADVE
CLG. 3 1/2'X12' TYPICAL
2'-5"
1'-6"
4'0" DOOR
9'-0"
6 3/4"
* Door swing optio
interlocks are provi

FIGURE C-1

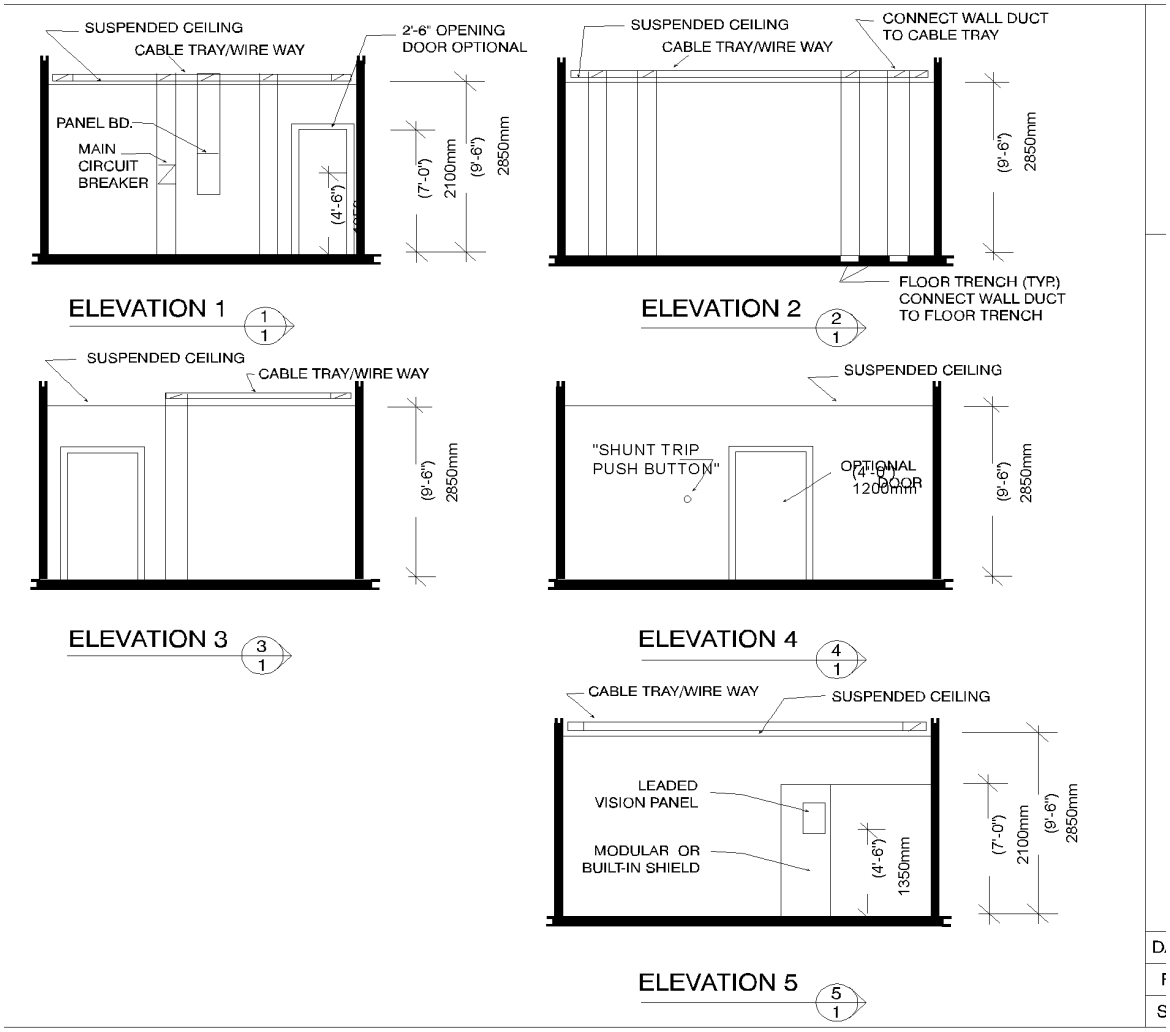
SUSPENDED CEILING
CABLE TRAY/WIRE WAY
2'-6" OPENING
DOOR OPTIONAL
PANEL BD.
MAIN
CIRCUIT
BREAKER
(4'-6")
(7'-0")
2100mm
(9'-6")
2850mm
ELEVATION 1
1
1
SUSPENDED CEILING
CABLE TRAY/WIRE WAY
CONNECT WALL DUCT
TO CABLE TRAY
(9'-6")
2850mm
FLOOR TRENCH (TYP.)
CONNECT WALL DUCT
TO FLOOR TRENCH
ELEVATION 2
2
1
SUSPENDED CEILING
CABLE TRAY/WIRE WAY
(9'-6")
2850mm
ELEVATION 3
3
1
SUSPENDED CEILING
"SHUNT TRIP
PUSH BUTTON"
OPTIONAL
DOOR
(4'-6")
1200mm
(9'-6")
2850mm
ELEVATION 4
4
1
CABLE TRAY/WIRE WAY
SUSPENDED CEILING
LEADED
VISION PANEL
MODULAR OR
BUILT-IN SHIELD
(4'-6")
1350mm
(7'-0")
2100mm
(9'-6")
2850mm
ELEVATION 5
5
1

FIGURE C-2

2

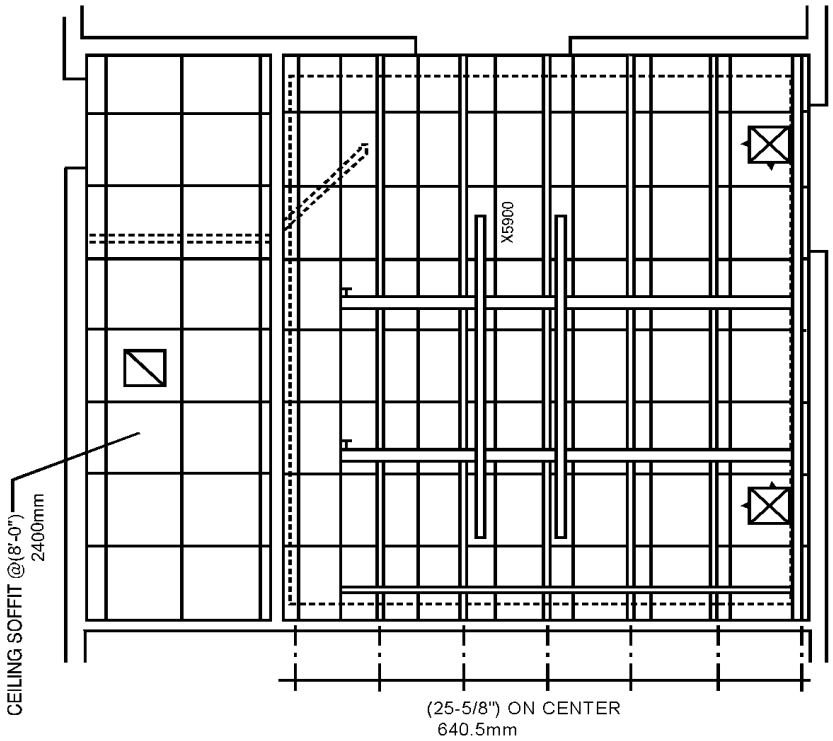

* Door swing optional i
interlocks are provided

3 FIGURE C-3

APPENDIX D: UFAS INTERPRETATIONS AND WAIVERS

D.1 This appendix provides information on written interpretations which have been issued by the Architectural and Transportation Barriers Compliance Board (ATBCB). Waivers which have been issued by ASD(FM&P) are also provided. Figure D-7 is a waiver that was issued by ASD(FM&P).

D.2 INTERPRETATIONS. The following information has been provided by the Architectural and Transportation Barriers Compliance Board and should be referenced in the following occupancies:

Mercantile (try-on and fitting rooms)
Health Care (x-ray or exam rooms)
Recreational (in association with showers in swimming pools, gymnasiums, etc.)
Educational (e.g. - if provided at athletic facilities or home-ec classrooms)

D.2.1 DRESSING ROOMS. In new construction, where dressing rooms are provided for use by the general public, patients, customers, or employees all shall be located on an accessible route. In existing construction, where structural impracticability can be demonstrated, one dressing room for each sex on each accessible floor/level shall be made accessible.

D.2.1.1 Clear Floor Space. A clear floor space allowing a person using a wheelchair to make a 180-degree turn shall be provided in every dressing room entered through a swinging or sliding door. No door shall swing into any part of the turning space. Turning space shall not be required in a private dressing room entered through a curtained opening at least 32" wide if clear floor space complying with section "Space Allowance and Reach Ranges" renders the dressing room usable by a person using a wheelchair.

D.2.1.2 Doors. All doors shall be in compliance with section "Doors".

D.2.1.3 Bench. Every dressing room shall have a 24"(min) by 48"(min) bench fixed to the wall along the longer dimension of the bench and not necessarily the room. The bench shall be mounted 17" to 19" above the floor and may be hinged. Clear floor spaces shall be provided alongside the bench to allow a person using a wheelchair to make a parallel transfer onto the bench. The structural strength of the bench and attachments shall comply with section "Structural Strength". Where installed in conjunction with showers, swimming pools, or other wet locations, water shall not accumulate upon the surface of the bench and the bench shall have a slip-resistant surface.

D.2.1.4 Mirror. A full-length mirror, measuring at least 18" wide by 54" high, shall be mounted in a position affording a view to a person on the bench as well as to a person in a standing position.

D.2.1.5 Rationale. Both UFAS and MGRAD are silent re dressing rooms. We have many requests for information & assistance in applying existing standards but none seems to be entirely appropriate. Since usability is a requirement and since many persons using wheelchairs must dress/undress in a semi-recumbent position, the need for a bench is clearly demonstrated. Other requirements are derived from known space and reach dimensions.

(Note: This is an ATBCB proposal for insertion into UFAS based on their

interpretation of minimum accessibility requirements for functional use of dressing rooms. This has subsequently been provided for adoption by the Americans with Disabilities Act.)

Figures D-1 and D-2 are provided for further information.

D.3 DMFO QUESTIONS AND ANSWERS. The Defense Medical Facilities Office prepared a series of questions relative to UFAS and forwarded them to the ATBCB for interpretations. The numbers listed in the Reference column relate to paragraphs and pages in Fed-Std-795, "Uniform Federal Accessibility Standards." Answers to the questions are indicated in **bold** type.

REFERENCE		COMMENT/QUESTION
D.3.1	3.5, p3	A definition is needed for clear floor space. The definition should be explicit, especially with regard to wall hung items which may be allowed to overlap this space, such as a lavatory. **You may use the definitions in 4.2.4.1 and 4.2.4.2, part of which allows knee space "under some objects" to be part of clear space - under a lav this would be 29"h x 30"w x 19" max per 4.19.3.**
D.3.2	4.1.2(4),& 4.1.2(5), p5 4.3.8, p19 4.9, p27	There appears to be a contradiction between these sections. Section 4.3.8 states that stairs shall not be part of an accessible route. Sections 4.1.2(4) and 4.9 appear to indicate that stairs are a part of an accessible route if they connect levels which are not connected by an elevator, or other states requirements per section 4.1. This needs to be clarified. **This is an inconsistency in UFAS terminology which we hope will be addressed as the standard setting agencies revise UFAS. Stairs, though not accessible to a person using a wheelchair, are indeed usable by people with certain disabilities and in some instances, are preferred over a ramp. It is my personal opinion that the UFAS provisions are so helpful they should be applied to all stairs in newly constructed buildings and facilities.**

D.3.3	4.1.4(9)(b), p10	This states that all common use toilet facilities shall be accessible. If an accessible toilet room is placed at the entry to a public toilet, does this satisfy this requirement even though the remainder of the toilet is not accessible? See example plan in Figure D-3. **The example plan does <u>not</u> meet the requirements for <u>new</u> construction, however, in some alterations the proposed arrangement may be regarded as fulfilling the requirements.**
D.3.4	4.1.4(9)(b), p10	This section requires 10% of patient bedrooms and toilets to be accessible to the handicapped. Many general hospitals have several types of wards or bed categories (i.e., ICU, Pediatrics, OB-GYN and Isolation). Does this section require a minimum of 10% of each category of bed to be accessible to the handicapped? **Yes**
D.3.5	4.2.3, p14	In health care facilities, does this standard require the referenced wheelchair turning space in any functional space other than toilets (4.22.3), bathrooms (4.23.3), and patient bedrooms (6.3(1))? **When "usability" of the room or space requires a person using a wheelchair to make a turn, the turning space is required.**
D.3.6	4.10.13,p32	This section states that sound level of audible signals of elevators shall be no less than 20 decibels. Should the sound level be specified to be less than 20 decibels above the prevailing ambient noise level of the space? **This paragraph covers only the sound level of the car position indicator <u>inside</u> the car and sets the <u>minimum</u> level only without regard for the ambient noise**

level (which may be assumed to be dependent on the number of people in the car as well as machine sound).

(Note: This item is currently under review by the ATBCB to determine the appropriate sound level.)

D.3.7	4.13.5,p33 4.13.6 4.13.11,p36	The life safety code (NFPA 101 5-2.1.4.1) does not allow doors other than side-hinged, swinging doors to be used for egress purposes. A note needs to be placed on such illustrations stating that these doors shall be used for only rooms or spaces which are not normally occupied (i.e., storage rooms, dressing booth, or single-person toilet rooms). **You are correct regarding the LSC requirements about egress in a hospital. Nothing is UFAS conflicts with LSC provisions and such a caveat has no place in the legal requirements of UFAS (but it would be a useful item in an explanatory "handbook") for UFAS is applied to many occupancy types where such doors would be permitted in occupied spaces by NFPA 101 or other building codes.**
D.3.8	4.13.7,p36	Two doors in series: Is it the intent of this section to apply to "vestibules" only, where the passage through both doors is always expected? **No.** Conversely, can we assume this section is not expected to apply to a room that has two entry doors that just happen to be in line with each other? See Figure D-4. **In a room where two entry doors line up, I believe that a clear floor space 48" long (as in Fig 26) must be provided so that one door is allowed to close fully before the person must maneuver to open the opposing door.**

D.3.9 4.13.7,p36

If the answer to previous question is no, delete this question. Would an ante room to an isolation room be allowed to have two doors in line, provided the following conditions are met?

a. The approach requirements or maneuvering clearances of each door considered independent of the other door comply with Figure 25.

b. There is a clear turn-around space that complies with Figure 3 in both the ante-room and the isolation room.

See Figure D-4.

D.3.10 4.13.7,p36

If two doors in series are located in walls perpendicular to each other, is a minimum clear distance of 48 inches required? See example plans in Figure D-5.

Yes.

D.3.11 4.16.2 & 4.16.4,p38

There is a conflict between the 36" grab bar dimension and the 36" minimum dimension for lavatory placement. Is a smaller grab bar dimension permitted?

No. The drawings in Fig. 28 appear inconsistent with the technical provisions. However, nowhere in the text is a shorter grab bar deemed acceptable. Since space must be allowed to accommodate the returns and escutcheons of the 36" grab bar, we recommend a minimum space of 39" to the edge of the lav. One must recognize also that this allowable arrangement does not permit a side transfer, only a diagonal transfer to the water closet from a wheelchair.

D.3.12 4.16.6,p38

What is the maximum height allowed for a toilet paper dispenser?

Not addressed, other than the 19"

minimum.

Also, is there a minimum and maximum distance from the back wall?

The maximum distance to the front edge of the dispenser is 36" (Fig 30(d)). Care must be exercised in specifying multi-roll surface mounted or projected dispensers to be mounted so as not to interfere with the use of grab bars.

D.3.13 4.19.2,p40

Recommend that 34" maximum dimension be shown for sink rim height on Figure 32.

Recommendation is good. We will pass this along to the standard-setting agencies for consideration in future UFAS.

D.3.14 4.4.19.4,p40

For safety reasons in medical facilities, the water temperature to general use sinks, exam rooms, public toilets, baths, showers, treatment rooms, etc. is limited to a maximum temperature of 105 F, by DoD criteria. Is it the intent of these sections to require insulation on drains and hot water supplies when the maximum water temperature is 105 F?

Yes - because UFAS cannot regulate maintenance and operations.

In addition, what is the maximum and minimum temperature allowable for any exposed element?

Not addressed. If no hot water is supplied, insulation may be omitted.

(Note: The ATBCB has verbally stated that on lavatories, if you put an elbow directly under the drain, run the drain to the wall with a trap flat against the wall and outlet of the trap going into the wall, then insulation would not be required on the drain. Likewise, if hot and cold water supply pipes are stubbed through

		the wall just below the bottom of the sink and pipes go straight up to the faucet, then insulation would not be required.)
D.3.15	4.21.2, p42	Are the shower dimensions of shower 35(a) to be strictly complied with? **Yes.** Can a flexible length such as 36" to 40" for each dimension be allowed? **No. Once a person has transferred from a wheelchair to the seat, he must be able to reach the controls and grab bar without leaning forward.**
D.3.16	4.21.2, p42	Are the shower dimensions of shower 35(b) to be strictly complied with? Is a flexible width of 30" to 36" and a flexible length of 60" to 66" acceptable? **A 36" width is actually better. Figure 35(b) dimension of "60" should read "60 minimum".**
D.3.17	4.21.2, p42	Refer to Fig 35(b): Is the 36" x 60" clear space valid? Could the 60" dimension be reduced, since a sink is shown in the clear area? **No. The sink must provide knee space as specified in Figure 31 to allow use of the clear floor space.**
D.3.18	4.21.4, p42	Length of grab bar needs to be specified for control side of 36" x 36" shower. **Yes, this should be clarified. Please note that the plan and elevations indicate the grab bar continues around the corner.**
D.3.19	4.21.4, p42	Length of grab bar needs to be specified for side and control wall of 30" x 60" shower. **Yes, this should be clarified. Plan and elevations show grab bar as continuous around 3 sides so lengths would be dependent on**

		actual size of shower.
D.3.20	4.21.2 4.21.4, p42	Placement of shower spray unit needs to be clarified for 30" x 60" shower unit. Figure 35(b) shows spray unit along back wall at a minimum of 27" from side wall. Figure 37(b) shows spray unit on control side of wall at 18" from entry side (or 12" from back wall). Are both configurations acceptable? **Yes, we believe so.**
D.3.21	4.21.6 4.21.6, p42	Is there a required height for mounting of spray unit in "fixed" position? **It must be within the front reach range, 48" maximum.**
D.3.22	4.21.7, p43	Drawings of shower stalls in Figure 37 should be revised to delete high curbs. **We are aware of this inconsistency. (Thanks for noticing.)**
D.3.23	4.23.3, p44	If there is a shower with no curb nor any other obstructions such as shower doors, is it allowable to have a turning space or clear space of another fixture in a single use toilet overlap the shower area? See example in Figure D-6. **Figure D-6 does not include the required 36" x 60" clear floor space at the shower. If it did, there would also be sufficient clear floor space for the lav without encroaching on the shower.**
D.3.24.	4.28.3, p45	A frequency of 5 Hertz for flashing lights appears too fast. Is this value correct for the fast flashing frequency? Also, a minimum frequency should be specified. **Current research recommends using a clear xenon flash tube, high intensity strobe light with an intensity of 75 to 120 candela-seconds and a flash rate of 1 to**

3 Hertz.

D.3.25.	4.29.3 4.29.4, p47	Is it the intent of these sections, that any stairs which are a part of any accessible path or required emergency exit shall have no tactile warning on doors or floors? **Tactile warnings are required on doors to <u>hazardous</u> areas. An exit stair is a route to safety and the door to a stair should not be marked as a hazard. The tactile warning section at stairs (even though stairs are not part of an accessible route) has been "reserved", pending further research. ANSI A117.1 does call for detectable warning at the top of stairs. Such installation would not be prohibited by UFAS and may, in the case of an open stair, actually enhance safety.**
D.3.26	4.30.5, p47	Section 4.1.1(7) requires display of international symbol for parking spaces, loading zones, entrances, toilets and baths which are accessible. Are there any other sections that dictate a requirement for having signage? **Yes. 4.1.2(15). It is the intent that all signs conform to 4.30.2 and 4.30.3, while permanent identification of rooms and spaces should be tactile and mounted as specified in 4.30.4 and 4.30.6. Incised letters will no longer be permitted when standard-setting agencies revise UFAS. If signs are altered, they must comply with these provisions for new construction. "Permanent identification" includes room numbers, exit stairs, restrooms, etc. not occupants names.**
D.3.27	4.30.4, p47	Rooms in hospitals are frequently changed, and signage is often designed for flexibility. Many signage systems have only a room number which is a permanent portion of a sign. The room function and/or person's name is on an "interchangeable strip or insert plate". Are signs with raised room numbers only

acceptable?

Yes.

Signs for toilets, parking spaces, etc., as required by 4.1.1(7) would be provided as completely permanent signs.

Yes.

The following comments or questions will all have UFAS Section 6, page 57 as their reference:

D.3.28 Dressing booth criteria for health care facilities needs to be developed, similar to criteria for toilet rooms. Criteria should include minimum clear space for turnaround, grab bar requirements, bench requirements, etc.

Agree.

D.3.29 Are all dressing booths at a bank of dressing rooms required to be accessible?

Yes. In new construction, they are considered to be "common use" areas.

D.3.30 Are all specimen toilets at a bank of specimen toilets required to be accessible?

Yes. In new construction, they are considered to be "common use" areas.

D.3.31 Does this standard intend to waive accessibility requirements for specialized medical equipments and/or their installations for such equipment as follows: fume hoods; sterilizers; cart washers; incinerators; IV poles; X-ray equipment; Medi-Prep station; surgical columns; hyperbaric medicine chambers; scrub sinks; nourishment stations; vault doors; photo-processing equipment.

UFAS does not apply to equipment.

D.3.32 Is it the intent of this standard

not to require full accessibility with a turnaround space in the following spaces:

flammable storage (50)
equipment Storage (50)
barium prep (70)
soiled linen (60)
clean utility rooms (60)
sterile storage (60)
lab incubation room (70) forms storage (50)
anesthesia gas storage (50)
baggage storage (40)
trash collection (60) acid storage (40)
plaster prep storage (50) gas storage (40)
chemical mix/storage (30)
parts storage (80)
work rooms - nursery (50)
vaults (40)
music/paging controls (50)
scrub areas (50)
radium sealed source rm (60)
injection room (50)

(Note: The numbers in parenthesis indicate the net square footage that has been traditionally assigned to these functions.)

Depends on actual use and whether these spaces are restricted to use by able-bodied military personnel only. It is recommended that accessibility be provided wherever possible because the use of the room or space may change over time.

D.3.34 Projection rooms are approximately 200 square feet and may be one level above the auditorium floor. Is it the intent of this standard to require an elevator for accessibility to this space, if this is the only space served?

Must be reviewed individually. If opportunity exists, accessibility should be provided. If not, perhaps the situation warrants a waiver application.

D.3.35 Computer rooms in medical facilities may be sized as small as 100 to 200 square feet. Is it

the intent of this standard to require ramps and/or lifts for accessibility to this space?

Absolutely.

D.3.36 Revolving, "light-proof" doors are used for X-ray film processing spaces. Is it the intent of this standard that darkrooms are accessible spaces? If yes, must the use of revolving doors be discontinued?

In new construction, other options are available and should be selected. An existing revolving door in an existing building may have to be altered as a consequence of a 504 complaint/action.

D.3.37 Is it the intent of this standard to make control wall configurations accessible within X-ray rooms?

In new construction, there should be little difficulty in providing accessibility to the X-ray control wall.

FIGURE D-1

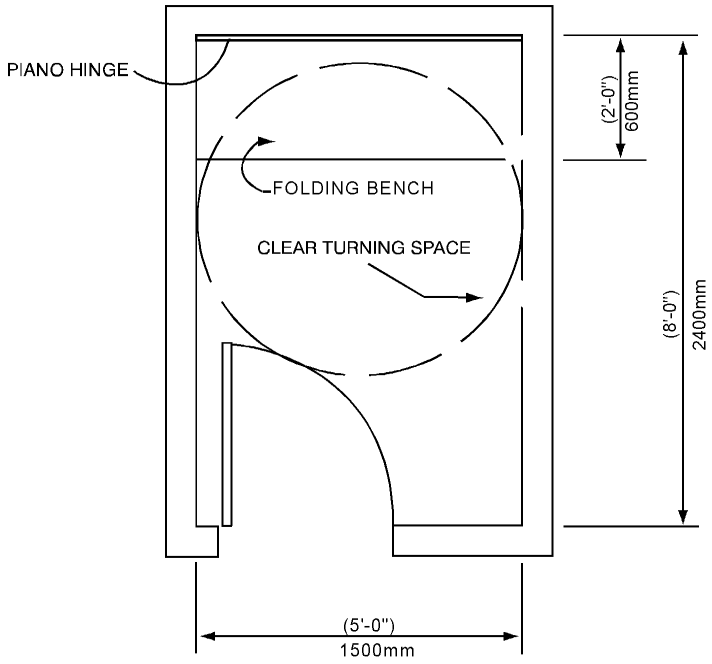

DRESSING ROOM

40 NSF

FIGURE D-1

FIGURE D-2

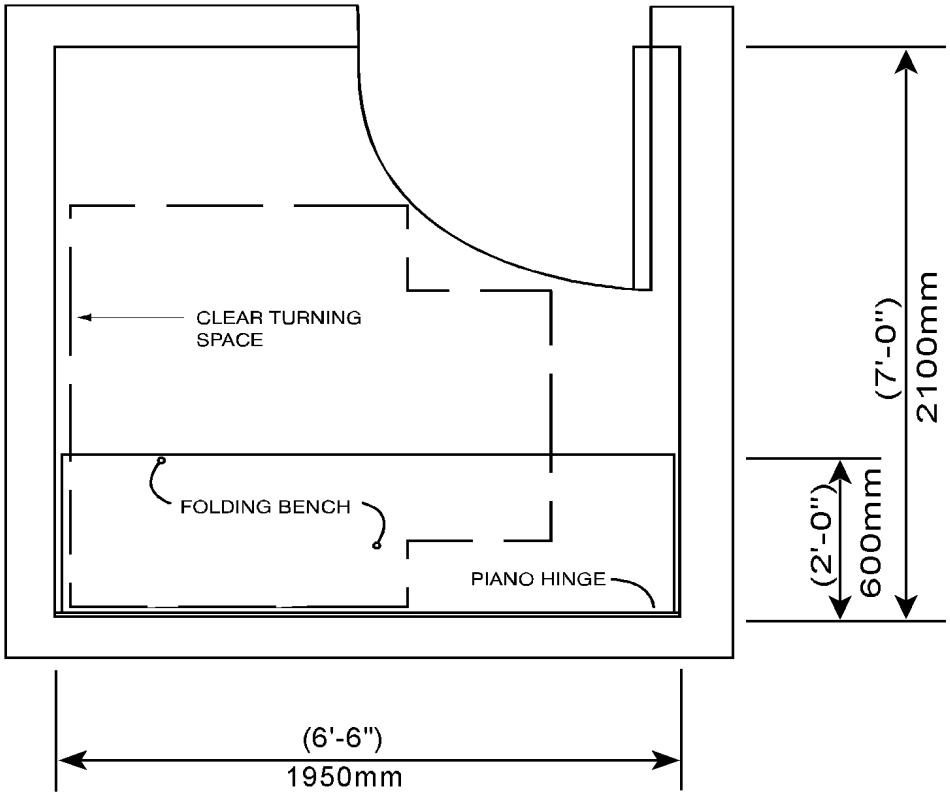

DRESSING ROOM

40 NSF

FIGURE D-2

FIGURE D-3

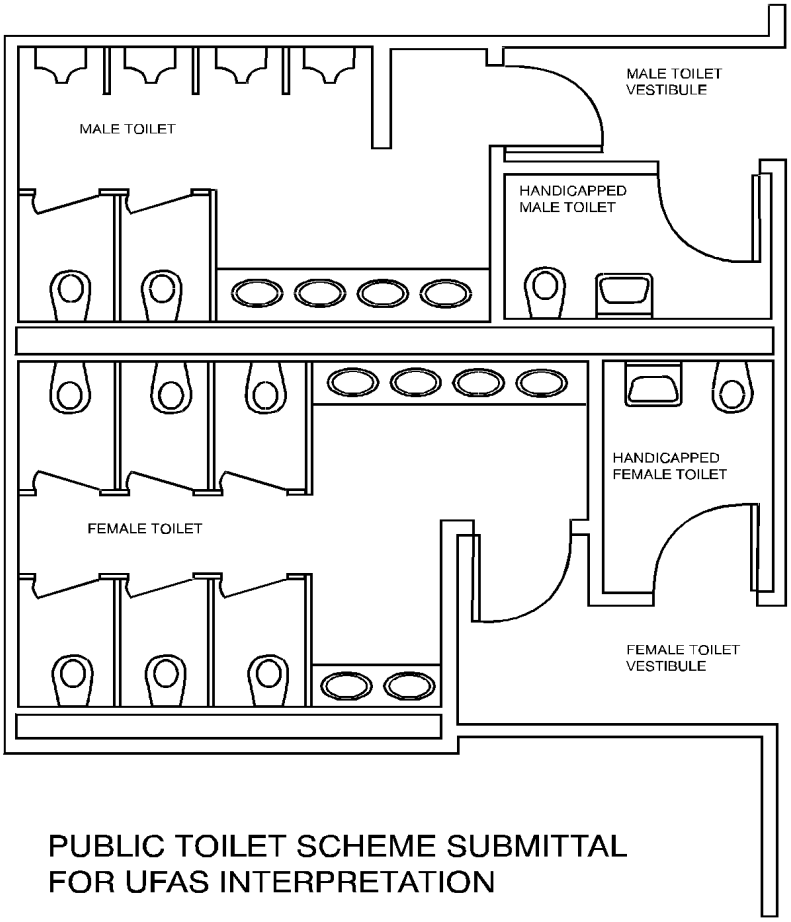

PUBLIC TOILET SCHEME SUBMITTAL
FOR UFAS INTERPRETATION

FIGURE D-3

FIGURE D-5

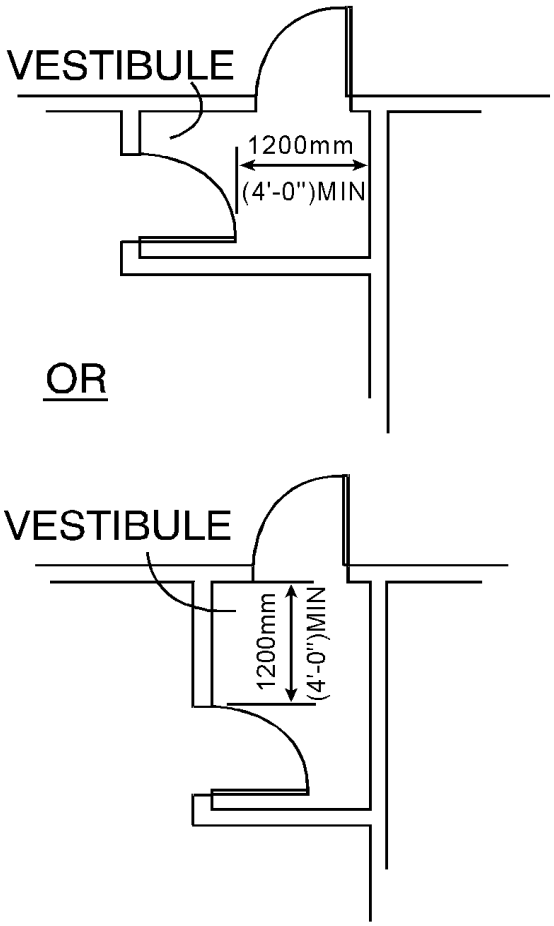

TWO HINGED DOORS IN SERIES SUBMITTAL
FOR UFAS INTERPRETATION

FIGURE D-5

FIGURE D-6

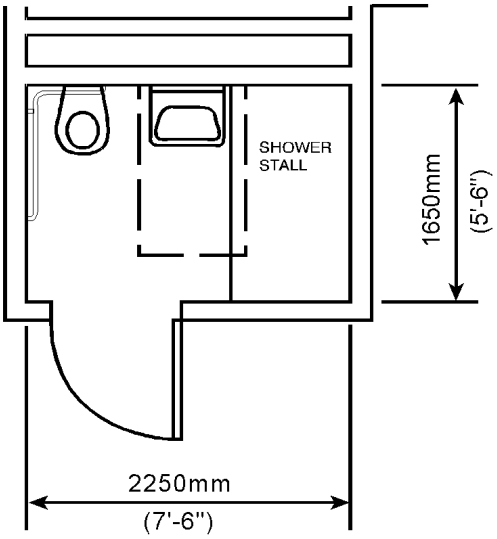

BATHROOM SCHEME SUBMITTAL FOR UFAS INTERPRETATION

NOTE: CLEAR FLOOR SPACE OF SINK OVERLAPS SHOWER STALL, WHICH HAS NO CURB

FIGURE D-6

ASSISTANT SECRETARY OF DEFENSE

WASHINGTON, D. C. 20301-4000

MAY 22 1992

FORCE MANAGEMENT
AND PERSONNEL

MEMORANDUM FOR ASSISTANT SECRETARY OF DEFENSE (HEALTH AFFAIRS)

SUBJECT: Waivers and Modifications of Accessibility Standards for Psychiatric Ward at Portsmouth Naval Hospital

This responds to your memorandum requesting waivers and modifications of accessibility standards to protect life safety in a psychiatric ward.

The following provisions of the Uniform Federal Accessibility Standards are hereby waived for the psychiatric ward at Portmouth Naval Hospital:

§ 4.16.4--grab bars for water closets

§ 4.17.6--grab bars for water closets

§ 4.20.4--grab bars for bathtubs

§ 4.20.6--shower spray unit for bathtubs

§ 4.21.4--grab bars for showers

§ 4.21.6--shower spray unit for showers

These standards are being waived because of the need to take special precautions in design and construction to prevent psychiatric patients from harming themselves or other people. Grab bars and protruding shower heads give patients means to commit suicide by hanging. A hose or hand-held shower unit can be used for hanging or strangulation or as a weapon. These features therefore are not required in the psychiatric ward.

Similarly, because lavatories can be removed from the wall and used as weapons, vandal-proof lavatories are desirable in psychiatric wards. The typical vandal-proof lavatory is 14 inches wide, 12 inches deep, and 10 inches high. The typical accessible lavatory is 20 inches wide, 18 inches high, and 6 inches high. Accordingly, the following modification of § 4.19.2(M) is authorized for the psychiatric ward at Portsmouth Naval Hospital:

4.19.2(M) Height and Clearances. Vandal-proof (prison-style) lavatories shall be mounted so that 50 percent comply with Figure 31(b) and 50 percent with Figure 31(c).

The lavatories in Figure 31(b) shall be mounted with rim or counter surface no higher than 38 inches (965 mm) above the finished floor. Provide a minimum knee clearance of 27 inches (685 mm) below the lavatory. The lavatory shall project a minumum of 12 inches (305 mm) from the wall.

The lavatories in Figure 31 (c) shall be mounted with rim or counter surface no higher than 34 inches (865 mm) above the finished floor. Provide a minimum knee clearance of 23 inches (585 mm) below the lavatory. The lavatory shall

project a minimum of 12 inches (305 mm) from the wall.

FIGURE D-7

Figures 31 (b) and (c) are attached. The rationale for using two different configurations in combination is that one facilitates a side reach from a wheelchair, while the other facilitates a forward reach.

Because modification of the standards for lavatory heights also affects mirror heights, the following modification of § 4.19. is authorized for the psychiatric ward at Portsmouth Naval Hospital:

§ 4.19.6 Mirrors. When lavatories are mounted as shown in Figure 31(b), mirrors shall be mounted with the bottom edge of the reflecting surface no higher than 40 inches (1015 mm) from the floor.

Any questions may be directed to Ms. Judith C. Gilliom of my staff at (703) 697-8661 or AUTOVON 227-8661.

Christopher Jehn

Attachments:
As stated

FIGURE D-7

FIGURE D-7

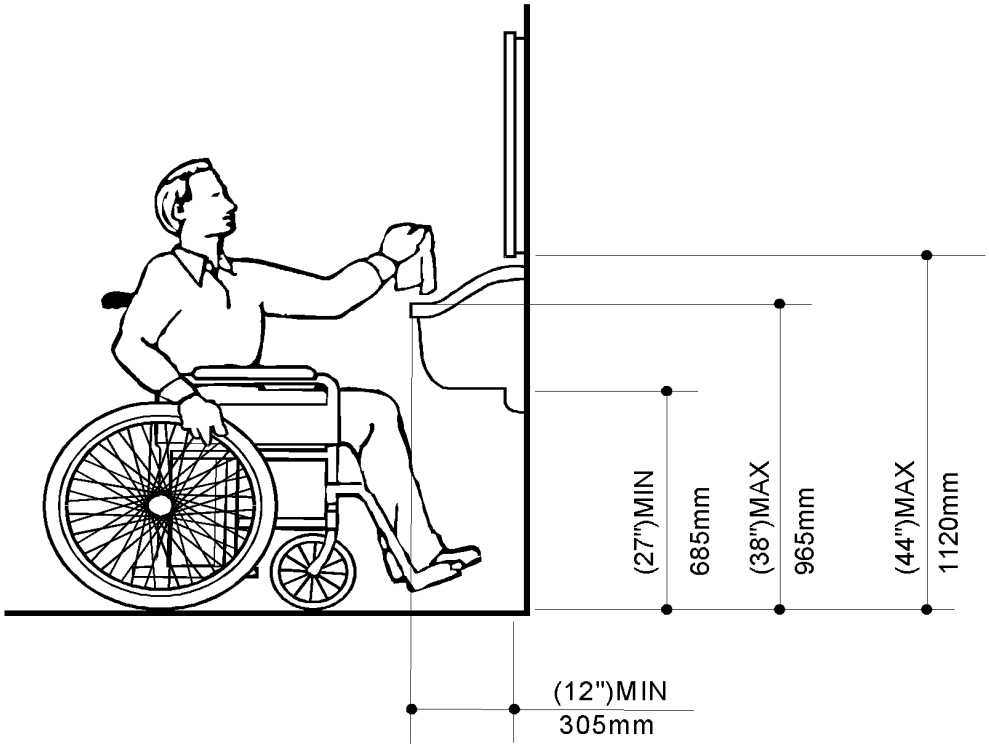

Fig. 31 (b)
Lavatory Clearances

FIGURE D-7

FIGURE D-7

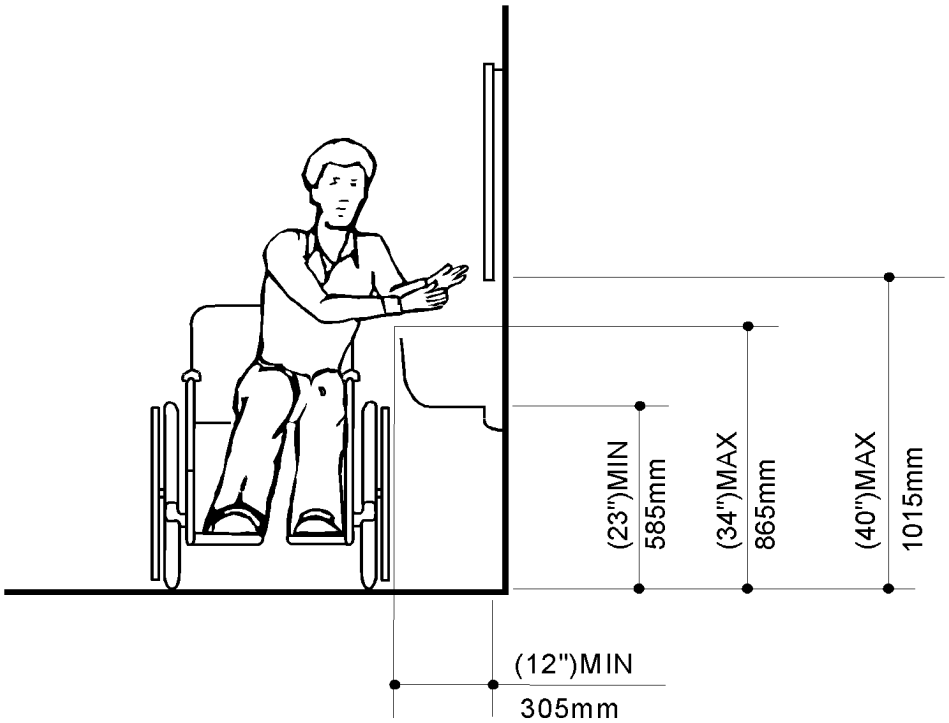

Fig. 31 (c)
Lavatory Clearances

FIGURE D-7

GLOSSARY OF TERMS, ABBREVIATIONS, AND ACRONYMS

AAFES. Army and Air Force Exchange Service.

Automatic Box Conveyor (ABC); also known as Electric Track Vehicle (ETV) or Powered Track Tote Box Conveyor System (PMTCS): A rail system utilizing self contained buss bars to provide power to special carriers that contain and move small supply, demand and other items between stations on the track network.

ACD. Automatic Call Distribution--telephone system.

ACGIH. American Conference of Governmental and Industrial Hygienists.

ACI. American Concrete Institute.

ADAAG. Americans with Disabilities Act Accessibility Guidelines.

ADL. Area Dental Laboratory. Regionalized laboratory for the preparation of dental bridgework, prosthesis, and prosthodontic devices too sophisticated and complex to be accomplished at the installation level.

ADP. Automated Data Processing. Any equipment that is used in the automatic acquisition, storage, manipulation, management, movement, control, display, switching, interchange, transmission or reception of data information.

ADPE. Automatic Data Processing Equipment. General purpose, commercially available automatic data processing equipment, and the systems created by them.

ADPS. Automated Data Processing System. The personnel, facilities, computer, and its associated storage, controlling, and output devices used in ADP.

ADS. Automated Data System. An assembly of procedures, processes, methods, routines, or techniques united by regulated interaction to form an organized whole and specifically designed to make use of ADPE.

Aeromedical Staging Facility (ASF). A medical facility which has aeromedical staging beds, located on or in the vicinity of an enplaning or deplaning air base or air strip that provides reception, administration, processing, ground transportation, feeding, and limited medical care for patients entering or leaving an aeromedical evacuation system.

AET. Annual Energy Target.

AFM. Air Force Manual.

AFCEE/CMM. Air Force Center For Environmental Excellence.

AFMSA/SGSF. HQ U.S. Air Force Surgeon General-Support-Facilities. The Office of Primary Responsibility (OPR), and the designated using Military Department representative of the U.S. Air Force Surgeon General for all policy, criteria decisions, and medical functional input regarding design and construction of U.S. Air Force medical projects worldwide. Focal point for coordination of programming and planning activities between DMFO and the using activity(ies) on the Air Force medical MILCON Program.

AFR. Air Force Regulation.

AHERA. Asbestos Hazard Emergency Response Act. 40 CFR 763.

AICUZ. Air Installation Compatible Use Zone.

AIDS. Acquired Immunodeficiency Syndrome.

Air Handling Unit. An air conditioning unit consisting of fan(s), coil(s), filter(s), and other components designed and sized for supplying conditioned air to a given area or space(s).

AISC. American Institute of Steel Construction.

AISI. American Iron and Steel Institute.

Alteration. Spaces within an existing structure requiring some level of modification to bring the space into compliance with code(s), regulations, or functional requirements. (See section 1).

Alternate Power Source. One or more generator sets, or battery systems where permitted, intended to provide power during the interruption of the normal electrical service; or the public utility electrical service intended to provide power during interruption of service normally provided by the generating facilities on the premises.

Ambulatory. Able to walk; not confined to bed.

Ambulatory Care Clinic. An entity or unit of a medical or dental treatment facility that is organized and staffed to provide healthcare and holds regular hours in a designated place.

Ambulatory Health Care Center. A building or part thereof used to provide services or treatment to four or more patients at the same time and meeting either (a) or (b) below. Ambulatory health care centers exhibit some of the occupancy characteristics of business occupancies and some of the characteristics of health care facilities. Ambulatory care medical clinics and similar facilities that are contiguous to health care occupancies but are primarily intended to provide outpatient services may be classified as ambulatory care occupancy provided the facilities are separated from health care occupancies by not less than 2-hour fire-resistive construction.

a) Those facilities that provide, on an outpatient basis, treatment for patients that would render them incapable of taking action for self-preservation under emergency conditions without assistance from others, such as hemodialysis units or freestanding emergency medical units.

b) Those facilities that provide on an outpatient basis surgical treatment requiring general anesthesia.

Ampacity. Current-carrying capacity of electric conductors expressed in amperes.

Ancillary. Subsidiary, subordinate, auxiliary, or supplementary.

Anesthesia. Partial or complete loss of sensation, with or without consciousness, as a result of drug, disease, or injury.

Anesthetic. Applies to any inhalation agent used to produce relative analgesia or general anesthesia.

Anesthetizing Location. Any area of the facility that has been designated to be used for the administration of any flammable or nonflammable inhalation anesthetic agents in the course of examination or treatment including the use of such agents for relative analgesia.

ANSI. American National Standards Institute.

Antisepsis. The prevention of sepsis by exclusion or destruction of microorganisms.

Antiseptic. The prevention of decay, putrefaction or, sepsis through use of an agent that will prevent or arrest the development of microorganisms.

Antistatic. That class of materials that includes conductive materials.

Apparatus. Furniture, laboratory hoods, centrifuges, refrigerators, and commercial or man-made on-site equipment used in a laboratory.
Appliance. Electrical equipment, generally other than industrial, normally built in standardized sizes or types, which is installed or connected as a unit to perform one or more functions.

AQCESS. Automated Quality of Care Evaluation Support System. An interactive, menu-driven patient administration and quality assurance computer system which provides inpatient facilities with the capability to collect, store, and retrieve data important for day to day management. The system is composed of four subsystems, three of which are functional (Admission and Disposition, Clinical Records, and Quality Assurance). These subsystems allow entry, updating, and display of data, as well as the production of reports for facilities and higher command.

Architect-Engineer (A-E or A/E) Firm. A business composed of professional architects and engineers.

Area of Refuge. An area protected from fire or smoke separated from all other spaces in the same building or an adjacent building that permits a delay in egress travel from any level.

ARI. Air Conditioning and Refrigeration Institute.

ARMS. Automated Review Management System.

Asbestos. A natural mined mineral which is a good thermal insulator, a good acoustical insulator, fire resistant, resistant to friction and wear, and a poor conductor of electricity. Known to cause lung cancer, mesothelioma, and other forms of cancer in the stomach and colon.

Asepsis. A condition free of germs or infection. Sterile.

ASHRAE. American Society of Heating, Refrigerating and Air Conditioning Engineers, Inc.

ASTM. 1) American Society of Testing and Materials.

2) American Standard Test Material.

ATBCB. Architectural and Transportation Barriers Compliance Board.

ATC. Air Transportable Clinic. Designed to provide limited medicine support/clinic service to an operational squadron of approximately 300-500 personnel at a limited or bare base. The assumption is that supporting hospital services will be nearby and/or aeromedical evacuation capability will be readily available. The ATC is intended to provide patient holding capability. The ATC is intended to provide interior care until the arrival of a follow-on tactical medical unit if duration of the operation warrants.

ATH. Air Transportable Hospital. This surgical/general hospital has 50 beds and one operating room (two operating tables) which provide resuscitative surgery and post-operative stabilization, medical and dental care for patients in accordance with evacuation policy for evacuation/return to duty within two to fourteen days. Its staff of general/orthopedic, surgical, and internal medical personnel can perform 12 major surgeries, and can accommodate a peak of 20 admissions and limited/definitive outpatient care for 50 patients each day. After patient evacuation, the unit can relocate and reestablish in 24 hours, excluding travel time. This unit is capable of all weather, combat zone operation and requires external support services.

Atmosphere. The pressure exerted by, and gaseous composition of, an environment.

Atrium. A floor opening or series of floor openings connecting two or more stories that is covered at the top of the series of openings and is used for purposes other than an enclosed stairway; elevator hoistway; escalator opening; or utility shaft used for plumbing, electrical, air conditioning, or communication facilities.

Authority Having Jurisdiction. The "authority having jurisdiction" is the organization, office, or individual responsible for "approving" equipment, an installation, or a procedure. For Department of Defense Medical and Dental Treatment Facilities, and the MIL-HDBK 1191, the authority having jurisdiction is the Defense Medical Facilities Office (DMFO). See also Governing Body.

AUTODIN. Automatic Digital Network. A worldwide DoD computerized general purpose communication system which provides for transmission of narrative and data pattern traffic.

Automated Guided Vehicle System (AGVS). Also known as "Driverless Vehicle System" (DVS): This system utilizes a battery powered, electronically controlled vehicle that follows a predetermined route (guide path or track that is buried in the floor or adhered to its surface) to move carts and material throughout the facility. The system utilizes the guide path network and special elevators to make the horizontal and vertical routings. Different degrees of automation and capabilities are available. The basic system components commonly found in a hospital application include: Driverless Vehicles, Elevators, Carts (Modules), Guide path and controls, Cartwash(s), Battery charge equipment, etc.

Average Interval. The elapsed time in seconds between elevator departures from a terminal floor, averaged over a specific time period. Average interval is a measure of the "quality" of elevator service. Average interval can be measured in existing buildings but must be calculated for new buildings. For practical purposes it can also be viewed as the average round trip time of an elevator, divided by the number of elevators within the group in question. Average interval is not a direct measure of how long prospective passengers wait for service.

Average Maximum Ride Time (A.M.R.T). The amount of time a passenger is in an elevator from the point of origin to the destination is referred to as the "ride time".

Average System Response Time. The average time it takes for hall calls to be answered by an arriving car. This is an estimated or simulated factor for new facilities but can be measured for existing facilities.

Average Waiting Time. The average period that users wait for service. This is an estimated, or simulated factor. For example, if one person arrives at a lobby and initiates a hall call, and waits for 20 seconds for the car to arrive, while a second person arrives at the same time as the car, the average for these two persons being served is 10 seconds (20 seconds plus 0 seconds divided by two). Tests indicate that average passenger waiting time (AWT) for service at a typical intermediate floor approximates 65% to 80% of the average interval during heavy two-way traffic periods.

AWG. American Wire Gauge.

AUTOVON. Automatic Voice Only Network. Worldwide military telephone system.

Backflow Prevention. The use of a recognized device to prevent the backflow of water or other liquids, mixtures, or substances into the distributing pipes of the potable supply of water from any source such as a plumbing fixture or mechanical equipment.

BAS. Battalion Aid Station.

Base Isolation. This is a seismic construction element to prevent ground motion from being transmitted from the building foundation into the superstructure.

Basic Life Safety (Seismic). A seismic damage risk classification category and an operational level category. Facilities in this category meet the minimum requirements and objectives of seismic building codes--to provide a collapse resistant structure and thereby save lives. The life safety of the immediate building occupants is the sole objective of this category. Efforts to control damage due to earthquake in this category are minimum and limited primarily to the saving of human life. (See Section 6).

BDS. Battalion Dressing Station.

Bed Capacity. Number of beds that a hospital can accommodate.
Beneficial Occupancy Date (BOD). The date on which a facility is available to serve the mission for which it is constructed.

Biomedical Equipment Maintenance Technician (BEMT or BMET). Responsible for inspecting, servicing, lubricating, adjusting, repairing, modifying, and replacing parts or assemblies and subassemblies of medical equipment.

BLAST. Building Loads Analysis and System ThermoDynamics. A computer programmed algorithm for calculating building heating and cooling loads, analyzing applications for HVAC systems, simulating system performance for determining energy consumption, and analyzing the life cycle cost of HVAC systems and energy conservation measures for determining cost effective selections and operational strategies.

BLAST/CB Protection. Refers to the sealing and pressurization, and decontamination of personnel and material(s) to preclude chemical- biological (CB) agents from entering a facility without compromising the CB protection or "shirt-sleeve" working environment within the facility.

BRAC. Base Realignment and Closure.

Branch Circuit. The circuit conductors between the final overcurrent device protecting the circuit and the outlets(s).

Btu. British Thermal Unit.

Btuh. British Thermal Unit per Hour.

Budget Fiscal Year. The next consecutive fiscal year following the current fiscal year. The year following the budget fiscal year appears as the first year in the proposed Six-Year Military Construction Program.
Built-in Equipment. That equipment which is affixed to the facility and usually included in the construction contract.

Bulk Cart Supply. The use of a wheeled container (open wire or enclosed construction) for the movement of materials. General configuration provides useable interior volumes of 30 to 40 cubic feet with load capabilities up to one thousand pounds.

Bumper Cart. A supply technique that utilizes the movement of a freshly supplied cart to a logistics station to replace a depleted one. Instead of returning the partially empty cart, with clean material, to be restocked (as in an exchange system) the material remaining on the cart is transferred to the "new" cart and the (now) empty cart is utilized for another function such as "soiled return".

BUMED. HQ U.S. Navy Bureau of Medicine and Surgery.

Business Occupancy. Business occupancies are those used for the transaction of business, for the keeping of accounts and records, and similar purposes. Doctors' offices, treatment and diagnostic facilities intended solely for outpatient care and physically separated from facilities for the treatment or care of inpatients, but otherwise associated with the management of an institution, may be classified as Business Occupancy.

Bulk Nitrous Oxide System. An assembly of equipment as described in the definition of bulk oxygen system that has a storage capacity of more than 3200 lb (1452 kg), approximately 28,000 cu ft (793 cu m) (NTP) of nitrous oxide.

Bulk Oxygen System. An assembly of equipment such as oxygen storage containers, pressure regulators, pressure relief devices, vaporizers, manifolds, and interconnecting piping that has a storage capacity of more than 20,000 cu ft (566 cu m) of oxygen (NTP) including unconnected reserves on hand at the site. The bulk oxygen system terminates at the point where oxygen at service pressure first enters the supply line. The oxygen containers may be stationary or movable, and the oxygen may be stored as gas or liquid.

BW/CW. Biological and Chemical Warfare. Provides defense against biological and/or chemical agents which may be used during combat situations.

C. Celsius.

CAPOC. Computer Assisted Practice of Cardiology.

Cardio. Has to do with the heart.

Cart (also called a "Module"). A wheeled vehicle upon which material is placed to transport it throughout the facility. Many cart variations are available. The movement of carts can be accomplished by employees and/or semi-automated and/or automated transportation systems as determined by careful analysis for each individual hospital.

Cartlift. A small vertical lift which is dedicated to the movement of carts. Cartlifts are usually automated and provide automatic dispatch and loading and unloading of carts. "Cartlifts" which are manually dispatched and require manual loading and unloading of carts are generally called cart dumbwaiters.

Cart Wash. The semi or fully automated machine that washes and rinses carts as required by the individual hospital's program. Units may provide automated or manual loading and unloading. Units may or may not provide a full drying capability. Selection of the correct unit(s) for an application should be made after a complete analysis of all requirements, including financial (LCC), traffic, etc. When the cartwash function is to be done manually, it is done by hose or steam gun in an equipment wash room or area.

Case Cart System. The use of a special cart for the transport of all linen and instruments for one surgical procedure. Where more than one "case" is contained, for simple procedures, the term multiple case cart is used. The cart may or may not be used as a back table and is designed accordingly.

Catchment Area. The geographical area of responsibility assigned to a health care facility providing services to the eligible population as listed in the Catchment Area Directory.

Category Code. Term used to identify real property building types by function. Example: Medical and Dental Treatment Facilities (MTF's) fall into category code 500.

CATV. Cable Television system for entertainment purposes.

CBA. Cost Benefit Analysis. The process of assessing all pertinent costs and benefits, usually performed in terms of an expected life-cycle of the system.

CBD. Commerce Business Daily.

CBTZ. Combat Zone.

CCA. Contamination Control Area.

CCP. Casualty Collection Point.

C-CS. Communications-computer system agreements with Host Nations OCONUS.

CCTV. Closed Circuit TV for security systems.

CDR. Call Detail Recording--telephone system.
Centralized Materials Management: The organization of all supply, processing, distribution, acquisition (purchasing),receiving, storage, inventory, and other related functions into one responsible operational entity.

CE. U.S. Army Corps of Engineers, also shown as USACE.

Central Material Service (CMS). The physical area and functional operation that is responsible for cleaning, sterilizing, preparing, packaging, storing and distribution of sterile items within the facility. CMS is the primary support element for the Operating suites and Labor and Delivery rooms.

CERCLA. Comprehensive Environmental Response Compensation and Liability Act.

CERL. Construction Engineering Research Laboratory.

CFA. Commission of Fine Arts.

CFC. Chlorofluorocarbon.

CFR. Code of Federal Regulations.

CGA. Compressed Gas Association.

Chain Conveyor. A conveyor that utilizes a chain to provide propulsion. Chain conveyors may be of the overhead or floor tow type.

CHAMPUS. Civilian Health and Medical Program for the Uniformed Services. Program administered by the Department of Defense that cost-shares for care delivered by civilian health providers to retired members, dependents of active and retired members, certain survivors of deceased members, and certain former retired members, certain survivors of deceased members, and certain former spouses of members of the seven uniformed services of the United States.

CHATH. Chemically Hardened Air Transportable Hospital.

CHCS. Composite Healthcare (Computer) Systems. Successor of Tri-Service Medical Information Service (TRIMIS) which was a part of the "new- generation" design concept. The TRIMIS Program Office initiative to implement a standardized, Tri-service, integrated health care management information system throughout the three MILDEPS.

Clinic A medical or dental treatment facility intended and appropriately staffed and equipped to provide primary ambulatory care services, limited specified secondary care services, and certain nontherapeutic activities related to the health of the personnel served, such as physical examinations, immunizations, medical administration, preventive medicine services, and health promotion activities.

CMTF. Contingency Medical Treatment Facility. An entity within the services' wartime organization structure which provides medical care during the contingency, war, or national emergency. Contingency Medical Treatment Facilities include medical treatment facilities afloat, deployable medical systems (DEPMEDS), and organizational medical assets.

Code. A document containing only mandatory provisions using the word shall to indicate requirements and in a form generally suitable for adoption into law.

COE. Chief Of Engineers. The Commander of the U.S. Army Corps Of Engineers.

Cold Room. A refrigerated area large enough for personnel to enter.

Combustion Products. The gases, volatilized liquids and solids, particulate matter, and ash generated by combustion.

Common Path of Travel. That portion of exit access that must be traversed before two separate and distinct paths of travel to two exits are available. Paths that merge are common paths of travel. Common path of travel is measured in the same manner as travel distance but terminates at the point where two separate and distinct routes become available.

Commission of Fine Arts (CFA). A regulatory body in the U.S. National Capital Region (NCR) which helps determine applicability of all Federal MILCON funded facilities within the U.S. National Capital Region. [See National Capital Planning Commission (NCPC).]

Compaction. A waste-handling methodology whereby the volume of waste materials is reduced for ease of disposal.

Composite Medical Facility (CMF). A MILCON funded facility made up of Health Care Occupancy and Business Occupancy (Outpatient Clinics and/or Dental Treatment Facilities) and/or Ambulatory Care Facilities. (See Medical and Dental Treatment Facility (MTF)).

Concepts. The first phase of design which includes Block Plans (S1), Schematics (S2), Design Development (S3) and the final 35 percent submission (S4). The basis on which a Programmed Amount (PA) can be set for the Budget Submission. Approximately 35 percent of the design effort, as opposed to the second phase of design which is called the "working drawings" phase of design.

Conductive. Not only those materials, such as metals, that are commonly considered electrically conductible, but also that class of materials which have a resistance not exceeding 1,000,000 ohms. Such materials are required where electrostatic interconnection is necessary.

Constructability. An analytical study which reviews the methodology, ease (or difficulty) with which a project can be administered, bid, built, enforced, understood, and phased which determines degrees of difficulty and construction time required to build a Medical Treatment Facility. (See section 2).

Construction Agent. The agency designated by the Secretary of Defense (SECDEF) responsible geographically (or by agreement) to erect, via contract, designs of Medical Treatment Facilities which have been coordinated by the Design Agents. Responsible for the project from Invitation for Bids (IFB) through Beneficial Occupancy (BOD) through the Warranty period(s). Current Construction Agents are:

a) The Corps of Engineers (USACE)

b) The Naval Facilities Engineering Command (NAVFAC)

c) The Air Force Engineers (AF/CECM) in the United Kingdom and selected MIP installations.

Continuing Education. Education beyond initial professional preparation that is relevant to the type of patient care delivered in the organization, and/or provides current knowledge relevant to an individual's field of practice, and/or health care delivery in general.

Contract Documents (CD's). Those design drawings and specifications which, as a unit, constitute the basis for receiving bids and awarding a contract for construction. CD's are the basis on which a building is constructed.

CONUS. Continental United States.

Conventional Construction. Existing traditional building methods as they are currently applied.

Court. An open, uncovered, unoccupied space, unobstructed to the sky, bounded on three or more sides by exterior building walls.

Court, Enclosed. A court bounded on all sides by the exterior walls of a building or exterior walls and lot lines on which walls are allowable. CPCS. Combat Personnel Control System. Commonly called the "electronic dog-tag," this is a developmental program to investigate the applicability of electromagnetic storage and data retrieval on combat personnel. Includes personnel and limited medical information.

CP&D. Central Processing and Distribution. An all-inclusive term for that function in a hospital which encompasses those terms variously known as Central Supply, Central Nursing Supply, Central Sterile Supply, and Central Material Services. Generally refers to a materials handling methodology. Provides for the central management of all medical material required to support patient care activities. The heart of this concept is an automatic distribution system. CPD requires the standardization and centralization of the elements of storage and distribution.

Criteria. Military Handbooks, criteria manuals, guide specifications, definitive designs, using Military Department guidance, standard designs, and other related guidance published to promote quality facilities' engineering, design, construction, and maintenance.

Critical Branch. A subsystem of the emergency system consisting of feeders and branch circuits supplying energy to task illumination, special power circuits, and selected receptacles serving areas and functions related to patient care, and which can be connected to alternate power sources by one or more transfer switches during interruption of normal power source.

Critical Care Areas. See section 10 for list of critical care areas.

Critical Equipment. That equipment essential to the safety of the occupants of the facility.

Critical Path. The linear path through a work schedule network determining the shortest time within which all work can be completed.

Critical System. A system of feeders and branch circuits in nursing homes and custodial care facilities arranged for connection to the alternate power source to restore service to certain critical receptacles, task illumination, and equipment.

CRREL. U.S. Army Cold Regions Research and Engineering Laboratory. Hanover, NH.

CRS. Corrosion-resistant steel.

CRT. Cathode Ray Tube. A television-type systems input/output device for display of graphic and alpha-numeric characters.

CRTS. Casualty Receiving and Treatment Ship.

CSH. Combat Support Hospital.

Current Working Estimate (CWE). The current cost of the project based on actual takeoff's from Contract Documents. Required at certain levels of effort of design to compare against programmed amount (PA) to determine whether the project is executable given projected funds availability.

CWCT. Chemical Warfare Casualty Treatment Facility. A passively protected 2-E Contingency MTF.

DCA. Dental Compressed Air.

Damage Risk Classification Categories (Seismic). Three seismic categories that attempt to relate the seriousness of the consequences of damage due to earthquake. The selection of a category may consider the density of human occupancy, the importance of the activity, or the value of the contents or structure itself. These categories are as follows: Basic Life Safety, High Risk Facility, and Essential Facility. (See Section 6).

DCIS. Defense Criteria Information Systems.

Dedicated Elevators or Lifts. A vertical transportation element that will be restricted in use to a singular predefined function (ie: clean surgical material only; soiled material only, etc.

DEERS. Defense Enrollment Eligibility Reporting System. Automated system of verification of a person's eligibility to receive Uniformed Service benefits and privileges.

Defense Contracting Audit Agency (DCAA). That agency in the Department of Defense (DoD) responsible for auditing defense contractors

Defense Medical Facilities Office (DMFO). The Office of Primary Responsibility (OPR) for all DoD MILCON funded facilities. Organizationally the DMFO is a part of the DASD Health Services Operations under the Assistant Secretary of Defense for Health Affairs (OASD-HA).

Demand (or Unit) Delivery System. The methodology established for the movement of smaller supplies and, as applicable, messages, lab specimens, records, etc., that are not available from the user stocking/supply inventory or that has been depleted from same or occurs on a basis that is not routine or predictable.

Department of Defense Dependent Schools (DoDDS). The functional agency responsible for the design, construction, operations, maintenance, and staffing of schools for DoD dependents assigned overseas. Similar to DMFO, DoDDS is also the agency with which the using Medical Military Departments coordinate use of their schools as "buildings of opportunity" for contingency operations during wartime.

Departmental Gross Area. The functional space within a department plus intra-departmental circulation. Does not include "general" circulation.

DEPMEDS. Deployable Medical System(s). Contingency medical treatment facilities which are capable of being transported and located in a desired or required area of operation during a contingency, war, or national emergency. Deployable medical systems are composed of fixed contingency hospitals and other fixed contingency hospitals which are not normally used for patient care during peacetime.

DEQPPM. Defense Environmental Quality Program Policy Memoranda.

Design Agent (DA). That agency, designated by the Secretary of Defense (SECDEF), responsible to design facilities in the Miltary Construction Program. Design Agents are responsible for the design of projects from receipt of a Design Authorization from DMFO through turning it over to the Construction Agents. Design Agents are:

a) The U.S. Army Corps of Engineers (USACE). The USACE Medical Facilities Office (MFO) is the primary USACE point of contact with OASD(HA).

b) The Naval Facilities Engineering Command (NAVFAC). The NAVFAC Medical Facilities Design Office (MFDO) is the primary NAVFAC point of contact with OASD(HA).

c) The Air Force Engineers (AF/CECM) in the United Kingdom. Air Force Civil Engineering Directorate of Engineering is the primary point of contact with OASD(HA).

Design Authorization (DA). The notice from DMFO to the Design Agents to proceed with A-E selection and design of a project to a designated level of effort. Usually designates project, project fiscal year, project location, programmed amount (PA), scope of the project (size in square feet), which meetings DMFO will attend, any deviations from the submittal requirements in this MIL-HDBK, and whether or not DMFO wishes to participate in the A-E selection process.

DET. Design Energy Target.

DEU. Design Energy Usage.

DHV. Dental High Vacuum for oral evacuation.

DLV. Dental Low Vacuum for oral evacuation.

DHA. Defense Health Agency.

DHC. Defense Health Council. Made up of using Military Department Surgeons General or their designated representatives to determine the validity and support of new medical technology, i.e., Hyperbaric Medicine, Magnetic Resonance Imaging (MRI), Positron Emission Technology (PET), Lithotripsy, etc. and which facility will receive the new technology.

DIN. Deutsche Industrie Normen. Specification system developed in Germany and widely used throughout Western European Countries as the basis for specifying building materials, equipment, etc.

Disabled Person. An individual who has a physical or mental condition which, to a material degree, limits, contributes to limiting or, if not corrected, will probably result in limiting the individual's performance or activities to the extend of constituting a substantial physical, mental, or vocational handicap.

DLA. Defense Logistics Agency. The agency of the DoD which, under its director, is responsible for the wholesale management, procurement, and distribution of items of supply common to the military departments.

DMEL. Design Master Equipment List.

DMFO. Defense Medical Facilities Office.

DMIS. Defense Medical Information System. Provides management information to the OASD(HA), field activities, and military medical departments. Contains information on beneficiary populations, facilities, direct care costs and workloads, Civilian Health and Medical Program of the Uniformed Services (CHAMPUS) costs, and other aspects of the delivery of health care services within DoD.

DMSB. Defense Medical Standardization Board. Group of clinicians and logistics personnel responsible for readiness contingency standardization of DEPMED sets, iso-shelter, and temper-tent configuration for the using Military Departments. A single contact point between DLA and other government agencies in all matters involving medical logistics.

DoD Medical Space Planning Panel. A panel that is responsible for developing health facility sizing criteria and for programming policy recommendations. The panel includes representatives of the Surgeons General of the Military Departments, the ASD(HA), and the ASD(MRA&L).

DPSC. Defense Personnel Support Center. Responsible for providing the most effective and economical support of designated common supplies (clothing and textile, medical and subsistence), medical equipment, and services to the military departments, and other DoD components.

DRB. Defense Review Board.

Drug Dispensing. The issuance of one or more doses of prescribed medication in containers that are correctly labeled to indicate the name of the patient, the contents of the container, and all other vital information needed to facilitate correct patient usage and drug administration.

Dumbwaiter. A small vertical lift which is dedicated to the movement of carts, tote boxes and other similarly-sized items. Generally this term implies manual loading and unloading of the cargo.

EA. Economic Analysis. A cost benefit analysis done to identify the relative cost-effectiveness of delivering healthcare to a projected beneficiary population under different MTF sizing scenarios. PL 97-337 (15 October 1982), amending Section 1087 of Title 10, U.S.C., requires an Economic Analysis be done to determine the space to be programmed in MTFs for military retirees and their dependents.

EEG. Electroencephalogramy.

EIA. Electronic Industries Association.

EIS. Environmental Impact Statement.

Electrical Life Support Equipment. Electrically powered equipment whose continuous operation is necessary to maintain a patient's life.

Elevator Population. The people (and other users) affecting the elevators in question.

EMCS. Energy Monitoring and Control System.

EMS. Emergency Medical Service.

Endemic. A disease of low morbidity that is constantly present in human community.

Engineering Instructions. Technical data from the Design Agents which expands the Design Authorization, clarifies numerous issues to be included in the Scope of Work (SOW), and specifies how the project is to be designed.

EPABX. Electronic Private Automatic Branch Exchange--telephone switch.

Equipment Grounding Bus. A grounding terminal bus in the feeder circuit of the branch circuit distribution panel that serves a particular area.

Equipment System. A system of feeders and branch circuits arranged for automatic or manual connection to the alternate power source and which serves primarily three phase power equipment.

Equivalency. Documented evidence that compliance with the intent of a standard has been achieved in a manner other than that prescribed by the standard.

Ergonometric Studies. These studies integrate the various work tasks assigned to human beings into the actual performance levels that can be expected (ie: how much physical effort can an employee be expected to exert at any one time and over an extended period). This ensures that tasks assigned to employees are not overly taxing and that the task should be performable by the personnel assigned within the time frame allocated.

ESCS. Engineered Smoke Control System.

Essential Electrical System. A system comprised of alternate sources of power and all connected distribution systems and ancillary equipment, designed to assure continuity of electrical power to designated areas and functions of a health care facility during disruption of normal power sources and also designed to minimize disruption within the internal wiring system. The essential electrical system consists of the emergency system and the equipment system.

Essential Facilities (Seismic). A seismic damage risk classification category. Facilities in the category are necessary for post-disaster recovery and require continuous operation during and after an earthquake (see Section 6). Efforts to control damage due to earthquake in this category are the greatest.

Etiologic Waste. Any viable microorganism or its toxins which causes or may cause human disease.

ETO. Ethylene Oxide.

ETS. European Telephone System.

EUCOM. European Command. The operating agency arm for the Joint Chiefs of Staff (JCS) in Europe.

Evaluation. Implies an analysis to be performed by the designer (A-E) in the basic contract (as opposed to "studies" or "investigations", which are extra services to be performed to complete the contract intent and requirements).

Exchange Cart System. A replenishment function for various types of supply items, that incorporates the use of carts that are "made up" in duplicate with one cart held at the user logistics station and the other in the cart assembly area. The freshly stocked cart is "switched" with the depleted cart on a scheduled basis to help insure adequate stocks of supplies are available to the using units and to assist in inventory and audit control. Many varieties of exchange cart systems can be established depending on the actual needs, physical environments (space, etc. and established requirements of an individual facility.

Explosion Protection. Where hazardous processes or storage are of such a character as to introduce an explosion potential, explosion venting, or an explosion suppression system specifically designed for the hazard involved shall be provided.

Exposed Conductive Surfaces. Those surfaces which are capable of carrying electric current and which are unprotected, unenclosed, or unguarded permitting personal contact. Paint, anodizing, and similar coatings are not considered suitable insulation unless they are listed for use.

Facilities. Building(s), equipment, and supplies necessary for the implementation of services by personnel.

Facility. A separate individual building, structure, utility system, or other item of real property improvement each item of which is subject to separate reporting and recording in accordance with DoD Instruction 4165 14, Inventory of Military Real Property.

FAR. Federal Acquisitions Regulation.

Fast Track. An accelerated scheduling technique characterized by overlapping of activities traditionally performed in a linear sequence, requiring early commitment to general decisions, but allowing postponement of specific decisions.

FAX. Facsimile machine which transmits printed or written material over telephone line.

FCGS. Federal Construction Guide Specification.

Feeder. All circuit conductors between the service equipment or the source of a separately derived system and the final branch-circuit overcurrent device.

FEMA. Federal Emergency Management Agency.

FEMP. Federal Energy Management Program.

FIP. Federal Information Processing. Any ADP equipment procured with federal government funds.

Fire Barrier. A fire barrier is a continuous membrane, either vertical or horizontal, such as a wall or floor assembly that is designed and constructed with a specified fire resistance rating to limit the spread of fire and that will also restrict the movement of smoke. Such barriers may have protected openings.

Fire Compartment. A fire compartment is a space within a building that is enclosed by fire barriers on all sides including the top and bottom.

Fire Protection Engineer. A person, persons, or firm specializing in building fire protection design who (which) is qualified to interpret and design fire protection drawings and specifications in accordance with NFPA, JCAHO, UBC, and other regulatory requirements.

Fire Resistance Rating. The time, in minutes or hours, that materials or assemblies have withstood a fire exposure as established in accordance with the test procedures of NFPA 251, Standard Methods of Fire Tests of Building Construction and Materials.

Fire Window. A window assembly, including frame, glazing, and hardware that under NFPA 257, Standard for Fire Tests of Window Assemblies, meets the fire protective requirements for the location in which it is to be used.

FIRMR. Federal Information Resources Management Regulation, governs procurement of FIP equipment.

Fixed. Fastened to walls, floors, or ceiling or to steam, gas, plumbing, electrical power, sensor lines in a permanent manner.

Flame Spread. The propagation of flame over a surface.

Flammable. An adjective describing easy ignition, intense burning, and rapid rate of flame spread during combustion. It may also be used as a noun to mean a flammable substance. Many substances nonflammable in air become flammable if the oxygen content of the gaseous medium is increased.

Flammable Anesthetics. Gases or vapors, such as fluroxene, cyclopropane, divinyl ether, ethyl chloride, ethyl ether, and ethylene, which may form flammable or explosive mixtures with air, oxygen, or reducing gases such as nitrous oxide.

Flammable Anesthetizing Location. Any area of a facility that has been designated to be used for the administration of any flammable inhalation anesthetic agents in the normal course of examination or treatment. DoD facilities do not use flammable anesthesia except in some training situations in major medical centers.

Flammable Gas. Any gas that will burn when mixed in any proportion with air, oxygen, or nitrous oxide.

Flammable Storage Cabinet. A cabinet for the storage of flammable and combustible liquids constructed in accordance with NFPA 30, Flammable and Combustible Liquids Code.

Flash Point. The minimum temperature at which a liquid gives off vapor in sufficient concentration to form an ignitible mixture with air near the surface of the liquid within the vessel as specified by appropriate test procedures and apparatus.

Floor Area, Gross. Gross floor area shall be the total floor area within the building to include all rooms, mechanical rooms, hallways, stairs, closets, thickness of interior or exterior walls, columns, or other features. Where the term "area" is used, it shall be understood to be gross area unless otherwise specified. (See Section 2 and Figure 2-7 for expanded explanation.)

Floor Area, Net. Net floor area shall be the actual occupied area in a functional space, not including thickness of walls, chases, columns, or general circulation, etc. (See Section 2 and Figure 2-8 for expanded explanation.)

Floor Tow. A chain conveyor mounted into the floor that interfaces with special couplers or attachments on carts to move them from one station to another.

FM. Frequency Modulation--radio signal.

Freight Elevator. A special elevator used to move large freight items. This unit often uses vertical doors and requires an attendant to operate it. General public traffic is prohibited from using a freight elevator. Review ANSI A.17 code for classifications.

Friable. (Asbestos). Any material that contains more than 1% asbestos by weight and that can be crumbled, pulverized, or reduced to powder, when dry, by hand pressure.

FSC. Federal Stock (or Supply) Class/Code. A four-digit numeric which identifies a commodity by model, type, or material.

FSES. Fire Safety Evaluation System. In accordance with NFPA 101M.

Full-Time Equivalent (FTE). Work force equivalent of one individual working full-time for a specific period which may be made up of several part-time individuals or one full-time individual.

Functional Requirements. Those requirements necessary to ensure a particular facility continually meets the objective of the function for which it was constructed.

Gravity Chutes. Usually used for the vertical return of trash and linen (separate chutes) to a holding and collection room at the base of each chute.

Governing Body. The individual, group, or agency that has ultimate authority and responsibility for the overall operation of the organization.

Ground-Fault Circuit Interrupter (GFCI). A device whose function is to interrupt the electric circuit to the load when a fault current to ground exceeds some predetermined value that is less than that required to operate the overcurrent protective device of the supply circuit.

Grounding System. A system of conductors that provides a low-impedance return path for leakage and fault currents. It coordinates with but may be locally more extensive than the grounding system described in Article 250 of NFPA 70, National Electrical Code.

GSA. General Services Administration. A federal agency established by act of Congress in 1949 to consolidate the functions of several other agencies and to provide economical, efficient, and serviceable administration in the procurement, supply, utilization, disposal, and records management of certain real and personal property and services.

Handling Capacity, Elevator. The "quantity" measure of elevator service is called handling capacity. Handling capacity is the number of persons and vehicles which can be transported by the elevator system in a given length of time. Average interval and handling capacity must be measured or calculated for the same designated time period to be meaningful.

Handrail. A bar, pipe, or similar member designed to furnish persons with a handhold. (A handrail, if of suitable design, may also serve as part of a guard.)

Hazard Current. For a given set of connections in an isolated power system, the total current that would flow through a low impedance if it were connected between isolated conductor and ground.

Hazardous Area in Laboratories. The area inside fume hoods or enclosures where tests or procedures are being conducted.

Hazardous Areas. Areas of structures, buildings, or parts thereof having a degree of hazard greater than that normal to the general occupancy of the building or structure, such as storage or use of combustibles or flammables, toxic, noxious, or corrosive materials, or use of heat-producing appliances.

Hazardous Location. A flammable anesthetizing location or any location where flammable agents are used or stored. See National Electric Code, Article 500.

Hazardous Waste. Waste which is 1) toxic, 2) infectious, 3) radioactive, 4) reactive, ignitable (spontaneously), or corrosive.

HBV. Hepatitis B Virus.

HCFC. Hydrochlorofuorocarbon.

HDD. Heating Degree Days.

Health. A condition in which all functions of the body and mind are "normal" and active.

Health Care Facilities. Buildings or portions of buildings in which medical, dental, psychiatric, nursing, obstetrical, or surgical care is provided. Health care facilities include, but are not limited to, hospitals, nursing homes, limited care facilities, clinics, medical and dental offices, and ambulatory care centers, whether permanent or movable. (NFPA 99)

Health Care Occupancies. Health care occupancies are those used for purposes such as medical or other treatment or care of persons suffering from physical or mental illness, disease or infirmity; and for the care of infants, convalescents, or infirm aged persons. Health care occupancies provide sleeping facilities for four or more occupants and are occupied by persons who are mostly incapable of self-preservation because of age, physical or mental disability, or because of security measures not under the occupants' control. Health care occupancies include:

a) Hospitals.

b) Nursing homes.

c) Limited care facilities.

d) Ambulatory health care centers.

Hematology. The science of the blood.

HEPA. High Efficiency Particulate Air.

High Hazard Areas. Areas of structure, buildings, or parts thereof used for purposes that involve highly combustible, highly flammable, or explosive products or materials that are likely to burn with extreme rapidity, or that may produce poisonous fumes or gases, including highly toxic or noxious alkalis, acids, or other liquids or chemicals that involve flame, fume, explosive, poisonous, or irritant hazards; also uses that cause division of material into fine particles or dust subject to explosion or spontaneous combustion, and uses that constitute a high fire hazard because of the form, character, or volume of the material used.

High Rise Building. A building more than 75 ft (23 m) in height. Building height shall be measured from the lowest level of fire department vehicle access to the floor of the highest occupiable story.

High Risk Facilities (Seismic). A seismic damage risk classification category. Facilities in this category are recognized as warranting a higher level of damage risk than the average building but less than for an essential facility. Efforts to control damage due to earthquake in this category are intermediate. (See Section 6).

Histology. Study of the microscopic structure of tissue.

HIV. Human Immunodeficiency Virus.

Home Care Department/Service/Program. A formally structured organizational unit of the hospital that is designed to coordinate the effective provision of physician-directed nursing and other therapeutic health care services in the patient's residence and that provides at least one therapeutic service directly.

Hospital. An inpatient medical treatment facility with an organized professional staff which has beds available 24 hours a day and is capable of providing definitive inpatient care. It is staffed and equipped to provide diagnostic and therapeutic services in the fields of general medicine, surgery, and preventive medicine services and has the supporting facilities to perform its assigned mission and functions. A hospital may, in addition, discharge the functions of a clinic and/or dental clinic.

Hospital Bed. A bed for an adult or child patient. Bassinets for newborns in maternity units, beds in labor rooms, recovery rooms, and other beds used exclusively for emergency purposes are not included in this definition.

HVAC. Heating, Ventilation, and Air-Conditioning.

Hyperbaric. Pressures above atmospheric pressure.

Hypobaric. Pressures below atmospheric pressure.

IBS. Integrated Building System. See Section 19.

ICU. Intensive Care Unit.

IES. Illuminating Engineering Society.

Incineration. In waste handling, the act of burning pathological and other designated waste/infectious waste in an incinerator in order to render the waste material(s) harmless.

Indirect Contract. A construction contract through the Host Country design or construction agent, often through a Status of Forces Agreement (SOFA); vis-a-vis "Direct" contracts through the USACE or NAVFAC.

Installation Medical Master Plan. A general site plan showing all existing medical structures proposed for retention or abandonment and all proposed project sites required to accomplish the projected medical mission.

Interdepartmental Circulation. General circulation. Circulation which provides access to and from various departments; includes elevators, stairs and major corridors.

Interface. 1) A common boundary between two systems or components. 2) A boundary detail designed to maintain a specified relation between adjacent systems or components.

Interstitial Space. Unfinished and unoccupied space between floors used for horizontal utility distribution systems, of sufficient size to accommodate workmen, and permit maintenance and alteration without interruption of activities on the floors. Refer to section 19.

Intradepartmental Circulation. The area reserved for corridors and passages which are found immediately within the departmental area.

Invitation For Bids (IFB). That point in the design-construction process when all review comments from the 100% design submittal have been incorporated, the CWE is within the Project Amount, DMFO has notified the Design/Construction Agent that funds are available, and DMFO has notified the Design/Construction Agent to advertise the project for bids. It is generally that point in the process when the project ceases to be a design effort and becomes a "Construction Project".

Isolated Power System. An archaic form of power system once used in flammable anesthetizing locations. Such systems are no longer required in DoD facilities.

Isolation Transformer. A transformer of the multiple-winding type with the primary and secondary windings physically separated which inductively couples its secondary winding to the grounded feeder systems that energize its primary winding.

JCS. Joint Chiefs of Staff. That agency within the DoD which jointly controls coordinated war planning for the Military Departments.

Joint Commission on Accreditation of Healthcare Organizations (JCAHO). Private, not-for-profit organization composed of representatives of the American College of Surgeons, American College of Physicians, American Hospital Association, American Medical Association, and American Dental Association whose purpose is to establish standards for the operation of health facilities and services, conduct surveys, and determine accreditation status of medical treatment facilities.

JSN. Joint Schedule Number. The number used to identify equipment on architectural drawings and plans supporting military construction projects.

LA. Laboratory Air.

Laboratory Work Area. A room or space for testing, analysis, research, instruction, or similar activities that involve the use of chemicals. This work area may or may not be enclosed.

LAN. Local Area Network. A modular communication methodology whereby the facility is prewired during construction for current and future communications (telephone, CHCS, etc.) needs without having to surface mount additional wires or coax in the future and reduce future communication installation costs.

Langelier's Index. A calculated number used to predict whether or not a water will precipitate, be in equilibrium with, or dissolve calcium carbonate.

LCCA. Life Cycle Cost Analysis.

LDE. Laboratory Dust Evacuation.

Life-Cycle-Cost (LCC). The determination, evaluation, and presentation of all costs incurred by and in a facility being engineered/designed. Includes costs of planning, designing, engineering, constructing, operating, and maintaining a component, system, or the facility.

Life Safety Branch. A subsystem of the emergency system consisting of feeders and branch circuit, meeting the requirements of Article 700 of NFPA 70, National Electrical Code, intended to provide adequate power needs to ensure safety to patients and personnel, and which can be automatically connected to alternate power sources during interruption of the normal power source.

Life Safety Code (L.S.C.). Standard developed and updated regularly by the National Fire Protection Association that specifies construction and operational conditions to minimize fire hazards and provide a system of safety in case of fire.

Life Safety Code Upgrade. The term used when the primary purpose for a project at a facility is to compartmentalize, provide for egress, and generally bring the facility up to the L.S.C. standard for access and exiting requirements.

Life Safety and Utility Upgrade. This term is used when the facility requires a full NFPA modernization which is not limited to NFPA 30, 37, 70, 99, 101, and 110.

Load, Live. The weight superimposed by the use and occupancy of the building not including wind load, earthquake load, or dead load.

Logistics Elevator. An elevator whose primary purpose is to transportation various supplies (dietary, medical/surgical supplies, etc., devices and equipment as well as occasional construction materials, etc.

Long-Range Plan. A listing of proposed health facilities construction considered appropriate for inclusion in the Six-Year Defense Program that reflects total health facilities requirements. Synonymous with "Six-Year Defense Program" and SYDP.

MASH. Mobile Army Surgical Hospital.

Material Handling (MH). The function of moving, packaging and storing of substances in any form. MH does not alter, change, enhance or add value to a product in any way. It is a "cost" function only which should be minimized to the greatest extent possible (within given aseptic, physical, operational and functional parameters).

Materials Management (MM). The general methodologies and organization responsible for all material and supply functions from the acquisition process through all other functions until final disposal or salvage. Organizationally the most efficient structure within most hospitals is the "centralized" one (see above). Various reporting structures can be established depending on the requirements and other pertinent factors at a specific institution.

Materials Processing. The function that does alter, change, make ready, etc. products and supplies (such as cleanup and sterilization of surgical instruments, etc. in advance of use.

May. "May" is used to indicate provisions which are used at the option of the designer.

MDF. Main Distribution Frame for telephone system.

MDIS. Medical Digital Imaging System.

Means of Egress. A means of egress is a continuous and unobstructed way of exit travel from any point in a building or structure to a public way and consists of three separate and distinct parts:

a) The exit access.

b) The exit.

c) The exit discharge.

A means of egress comprises the vertical and horizontal travel and shall include intervening room spaces, doorways, hallways, corridors, passageways, balconies, mezzanines, ramps, stairs, enclosures, lobbies, escalators, horizontal exits, courts, and yards.

Mechanical Space. The area which houses the primary and intermediate components of the air conditioning, plumbing, communication, electrical and ventilation systems. This area includes chases and shafts as well as mechanical and electrical equipment rooms.

MCA. Medical Compressed Air.

Medical Military Construction Program (MILCON). That portion of the President's budget devoted exclusively to the renovation, upgrade, and replacement of Medical Treatment Facilities which costs more than $200,000. MILCON is not supposed to include Operations and Maintenance (O&M) or Repair and Maintenance (R&M) unless the area which could be done with O&M or R&M is affected by the larger MILCON project and must be accomplished to provide a complete and usable facility in accordance with NFPA and JCAHO requirements.

Medical and Dental Treatment Facility (MTF). A facility established for the purpose of furnishing medical and/or dental care to eligible individuals.

MEDRAMS. Medical Readiness Assemblage Material System. An information system to assist in the inventory and equipment management for prepositioned contingency supplies and equipment.

MERC. Medical Equipment Repair Center. A consolidated intermediate level maintenance activity designated to provide medical equipment maintenance and engineering support to DoD medical activities.

Mezzanine. An intermediate level between the floor and the ceiling of any room or space and covering not more than one-third of the floor area of the room or space in which it is located.

MFO. Medical Facilities Office.

MFDO. Medical Facilities Design Office.

MFAMB. Medical Facilities Acquisition and Maintenance Board.

MFRCL. Medical Facilities Room Contents List.

MHSS. Military Health Services System.

Migration: When more than one elevator group is available in a building, a passenger's origin does not necessarily dictate which elevator group will be used. A certain percentage of the population will migrate to other areas of a building to use an elevator for reasons such a meeting a friend or dropping off something on the way to their destination. This percentage is usually estimated to be 5-10% of the population (or as otherwise appropriate for the facility being studied).

Military Construction Programming. The annual processing, review, and approval of military construction project proposals by the Military Department Secretaries, the OSD, and the OMB for submission to the Congress.

Mixed Occupancies. Sections of health care facilities may be classified as other occupancies if they meet all of the following conditions:

a) They are not intended to serve health care occupants for purposes of:

1. Housing, or

2. Treatment, or

3. Customary access by patients incapable of self-preservation.

b) They are adequately separated from areas of health care occupancies by construction having a fire resistance rating of at least 2 hours.

MODEM. Modulator-Demodulator. Communications device used to link computers with remote terminal devices or other remotely located computers.

Modernization. Alteration, repair, remodeling, replacement and renovation of existing buildings (including initial equipment thereof) and replacement of obsolete, built-in equipment of existing buildings. It does not include replacement of a facility or a portion to a capacity greater than the capacity of the existing facility.

Modular. 1) Having commensurable dimensions.

2) Capable of arrangement with exact fit in more than one sequence or direction.

3) Composed of/or containing predetermined dimensional and/or functional units such as repetitive structural bays or service modules.

MPRC. Medical Planning Review Committee.

MSDS. Material Safety Data Sheets.

MTMC. Military Traffic Management Command.

Must. Indicates a mandatory requirement. Analogous to shall.

MV. Medical Vacuum.

National Capital Planning Commission (NCPC). A regulatory body in the U.S. National Capital Region (NCR) which helps determine applicability of all Federal MILCON funded facilities within the U.S. National Capital Region. (See definition of Commission of Fine Arts and National Capital Region.)

National Fire Codes. Codes published by the National Fire Protection Association (NFPA).

NATO. North Atlantic Treaty Organization.

NAVAIDS. Air and Sea Navigational Aids.

NAVFAC. Naval Facilities Engineering Command.

NAVFACINST. Naval Facilities Division Instructions. U.S. Navy design and construction guidance for use in the design and construction of Navy Facilities.

NC-LEVEL. Noise Criteria-Level. Refers to a set of contours, roughly corresponding to the ear's response to Sound Pressure Level at various frequencies, which define the background sound level existing within a space.

NCRP. National Council of Radiation Protection and measurements.

NEPA. National Environmental Policy Act.

NESHAPS. National Emission Standards for Hazardous Air Pollutants.

NIOSH. National Institute for Occupational Safety and Health.

NIST. National Institute of Standards and Technology.

NO. Nitrous Oxide.

Noncombustible Material. A material (as defined in NFPA 220, Standard on Types of Building Construction) that, in the form it is used and under the conditions anticipated, will not ignite, burn, support combustion, or release flammable vapors when subjected to fire or heat. Materials reported as noncombustible when tested in accordance with the Standard Test Method for Behavior of Materials in a Vertical Tube Furnace at 750 degrees C, ASTM E136, shall be considered noncombustible materials.

Nonflammable Anesthetic Agent. Refers to those inhalation agents that because of their vapor pressure at 98.6 degrees F (37 degrees C) and at atmospheric pressure cannot attain flammable concentrations when mixed with air, oxygen, or mixtures of oxygen and nitrous oxide.

Nonflammable Anesthetizing Location. Any anesthetizing location designated for the exclusive use of nonflammable anesthetizing agents.

Nonflammable Medical Gas System. A system of piped oxygen, nitrous oxide, compressed air, or other nonflammable medical gases.

Non Routine Movements. Those movements that occur on a demand basis and are generally unschedulable (ie: STAT moves, lab samples/requests, etc.).

Nosocomial. Pertaining to or originating in a hospital.

NPDES. National Pollutant Discharge Elimination System.

NSN. National Stock Number. Medical equipment identification consisting of an applicable four-digit class code number plus the nine-digit national item identification number.

Nursing Care Unit (NCU). An organized jurisdiction of nursing service in which nursing services are provided on a continuous basis.

Nursing Services. Activities related to nursing care performed by nurses and other professional and technical personnel under the supervision of a registered nurse.

Nurses' Stations. Areas intended to provide a center of nursing activity for a group of nurses serving bed patients where the patient calls are received, nurses are dispatched, nurses' notes written, inpatient charts prepared, and medications prepared for distribution to patients. Where such activities are carried on in more than one location within a nursing unit, all such separate areas are considered a part of the nurses' station.

OASD(HA). Office of the Assistant Secretary of Defense(Health Affairs).
Occupancy. The purpose for which a building or portion thereof is used or intended to be used.

Occupant Load. The total number of persons that may occupy a building or portion thereof at any one time.

Occupiable Story. A story occupied by people on a regular basis. Stories used exclusively for mechanical equipment rooms, elevator penthouses, and similar spaces are not occupiable stories.

OCONUS. Outside the Continental United States.

OHCS. OSHA Hazard Communication Standard.

Operational Level Category (Seismic). These categories define the post-earthquake performance requirements for various facilities with respect to operational mission, disaster preparedness, and medical post-earthquake needs.

Operations and Maintenance (O&M) FUNDS. Those funds other than MILCON used for the express purpose of upgrading and maintaining existing facilities and equipment, or for the purchase of government furnished equipment and furnishings (not built-in) to provide a complete and usable facility at BOD.

OSHA. Occupational Safety and Health Administration.

OSHOSP. Overseas Hospital.

OX. Oxygen.

PA. Process Air.

PACOM. Pacific Command. The operating arm for the Joint Chiefs of Staff (JCS) in the Pacific. Located in Hawaii.

Par Stock(ing). A supply technique which utilizes fixed or moveable shelving within a logistics center to hold preset levels of user required inventories. Resupply of depleted items is done on a periodic basis (generally from a "master" supply cart which is moved from station to station).

Passenger Elevator. An elevator configured to move visitors, staff and other ambulatory pedestrian traffic between floors. This elevator is generally wide and shallow in configuration to facilitate the movement of pedestrians.

Patient Care Area. Any portion of a health care facility wherein patients are intended to be examined or treated.

Patient Service Elevator. An elevator configured to move patients on beds and gurneys, as well as patient care related equipment such as portable X-rays, inhalation equipment, empty gurneys, wheelchairs, etc. This elevator is generally narrow and deep to facilitate the loading and unloading of this traffic.

PCCIE. Power Condition and Continuation Interfacing Equipment. Electronic devices to help smooth power fluctuations to computer systems. Precludes sudden loss of power or damaging spikes in current flows.

Permanent. For the purposes of Medical MILCON construction, any structure designed for a useful life-span of 25 years or longer.

PET. Positron Emission Tomography.

Plan of Correction, Conditional Accreditation. An organization's written plan, approved by Joint Commission staff, that outlines the activities that the organization will take to address compliance issues that caused the Accreditation Committee to make a decision of Conditional Accreditation. The plan will be the basis for the follow-up survey six months following approval of the plan.

Plan of Correction. An organization's written statement, approved by Joint Commission staff, that details the procedures to be taken to correct existing life safety deficiencies and lists the extraordinary safety measures to be implemented to temporarily reduce the hazards associated with the deficiencies.

Plumbing Fixture. Installed receptacles, devices or appliances which are supplied with water or which receive liquid or liquid borne wastes and discharge such wastes into drainage systems to which they may be directly or indirectly connected.

Pneumatic Tube System. A pneumatically powered small diameter tube (usually 4" or 6") that moves special carriers which contain messages, small supplies or other items that physically "fit" and can tolerate this method of transport. These systems can be point-to-point or multi-station in design.

POL. Petroleum, Oils, and Lubricants.

POM. Program Objective Memorandum. Formal document to identify major initiatives, their resource consumption estimates, and their operational justification used to prioritize and allocate manpower and fiscal resources.

Post Occupancy Evaluation (POE). An evaluation of the design and construction of a facility performed after BOD to obtain lessons-learned which can be applied to present and future designs and criteria.

PRC. Program Review Council. Review body who makes recommendations on POM initiatives as part of the overall program review process.
Precious Metals Recovery Program. Promotes the economical recovery of precious metals from excess and surplus materials, and the use of recovered precious metals as Government Furnished Material.

Pre-Engineered Buildings (PEB's). For the purpose of this criteria, pre-engineered buildings shall be considered as those buildings in various configurations and sizes that are available from manufacturers as a standard item. This type of construction may be used for DoD medical and dental facilities where such use is indicated by life cycle cost to be economical, where they will meet the performance and functional requirements of the project and are architecturally compatible with the environment in which they will be erected. Because of the great variance in the quality and cost of such structures on the market, extreme care must be used in selection to ensure that the quality of the facility to be provided is commensurate with the project requirement and expected longevity of the mission to be served. Prefabrication. The on-site or off-site advance manufacture of building systems and components traditionally fabricated in place during installation.

Pressure Reducing Regulator. A device that automatically reduces gas under high pressure to a usable lower working pressure. In hospitals, the term "regulator" is frequently used to describe a regulator that incorporates a flow-measuring device.

Preventive Maintenance. The care and servicing of facilities or equipment for the purpose of retaining it in a serviceable condition.

PRISM. Provider Requirements Integrated Specialty Model. Automated information system used to analyze current and projected manpower requirements by provider specialty codes.

Programmed Amount (PA). The initial programmed amount is the estimated cost of a facility based on the DoD Cost Guidance and 1391 preparation prior to any design effort which establishes a project's viability in the budget cycle. Once Concept Design is completed the PA may be adjusted (up or down) based on the developed and validated CWE from the Design Agents. This PA (new) may be the amount sent to Congress and the basis of Final Contract Document Design phases through Invitation for Bid (IFB).

Protective Construction. Protective construction is defined as those measures which can be effected by construction related activities to reduce or nullify the effects of an attack upon the installation and/or enhance the recuperability of the installation after attack. The term includes dispersion and duplication of structures and activities, strengthening (hardening) of structures, camouflage or "tone-down" painting and physical protection against chemical, biological, and radiological agents.

Protected Structure. (Also a "hardened structure".) Structures designed to protect the occupants and functions therein from the effects of blast pressure, penetration, fragmentation, and ground shock due to use of conventional weapons against the facility.

Provider. Healthcare professional or facility or group of healthcare professionals or facilities that provide healthcare services to patients.

Public Way. Any street, alley, or other similar parcel of land essentially open to the outside air, deeded, dedicated, or otherwise permanently appropriated to the public for public use and having a clear width and height of not less than 3 m (10 ft).

PVC. Polyvinyl chloride.

Queuing Analysis. In its simplest form a "queue" is a "line" of people, objects etc., waiting for some function or process (ie: people waiting for an elevator, carts waiting to enter[automatically] into a cart lift or cartwash, etc. to be completed before "they" can be accommodated. A queuing analysis is the mathematical computations that establish the probability factors necessary to determine the number, type and handling capacities of functional equipment and the length of queuing space required for various functions (i.e. The number and type of cartwashers AND the space in advance of the equipment that will be necessary to process and otherwise accommodate X number of carts in Y minutes. Many mathematical probability formulas are available (ie: "Monte Carlo" theory; Poison Distribution, Binomial Distribution, etc. as well as "industry standard" formulas that are more "experience based" than mathematical.

RA. Risk Analysis. The process by which designs are evaluated to assess the security and information system privacy safeguards they must possess.

Rad/Fluoro. Radiographic/Fluoroscopic.

Ramp. A ramp is a inclined floor surface or a surface in an accessible space that has a running slope greater than 1 in 20.

RAS. Regimental Aid Station.

RCRA. Resource Conservation and Recovery Act. 42 USC 6973.
Readiness, Military. The ability of forces, units, weapons systems, or equipment to perform as they were intended and to deploy and employ without unacceptable delays.

Relocatability. The ability to economically dismantle, transport to a new location, and re-erect a facility.

Relocatable Contingency Medical Treatment Facility (CMTF). A CMTF designed specifically for mobility. Mobility is a quality or capability that permits these CMTFs to move from place to place while retaining the ability to fulfill their primary mission for the Military Services.

RFI. Request for Information. A procurement device which provides commercial industry with a background statement of a system(s) requirement and requests industry to comment on the requirement noting its expected technical feasibility and its possibilities for meeting projected cost and milestone schedules.

RFP. Request for Proposal. A procurement document released to commercial industries outlining a requirement for development and/or implementation of a system or design. Industry provides its formal response in the form of proposed solutions to the problem defined, its cost and development schedules, and other pertinent data upon which the government selects a vendor(s) with whom to contract.

Resource Analysis and Planning System (RAPS). An automated tool that provides users the capability of assessing the impact of alternative assumptions and policy decisions on the beneficiary populations, utilizations, manpower requirements, and costs of the Military Health Services System (MHSS). It is intended primarily as an analysis tool, not as an authoritative data retrieval system, although it may be used to provide the best population estimates currently obtainable.

Respiratory Care Department/Service. An organizational unit of the hospital that is designed for the provision of ventilatory support and associated services to patients.

Risk. The possibility of suffering harm, disease, or loss.
Risk Management. Function of planning, organizing, implementing, and directing a comprehensive program of activities to identify, evaluate, and take corrective action against risks that may lead to patient, visitor, or employee injury and property loss or damage with resulting financial loss or legal liability.

Routine Movements. Those movements that occur on a regular, predictable and schedulable basis.

RPIE. Real Property Installed Equipment. Items of equipment attached to or installed in real property.

Schematic Design. Room-by-room scaled drawings defining the size and arrangement of areas in a building or building configuration as a basis for design development.

SCPS-M. Survivable Collective Protection System-Medical. Sometimes called the "French Sewer Pipe Solution." One, of many solutions, to provide an overpressured environment in a chemical-biological (CB) contaminated environment to provide a clinically sound "shirt-sleeve" working environment for patients and providers in the Combat Zone. Consists of 10 foot (minimum) concrete pipe sections overburdened with earth and a maze entry. An outgrowth of survivable collection shelters used for air crews and other "sortie-generating" personnel who have to remain in the Combat Zone during a conflict.

Section 2807, Title 10, U.S.C. The appropriate committees of Congress must be notified of the intent to award a contract for architectural and engineering services and construction design for the proposed military construction project if the estimated cost of such services exceeds $300,000. This notification must include the scope of the proposed project and the estimated cost of such services and must be made not less than 21 days before the initial obligation of funds for such services.

Semi-Permanent. For the purposes of medical MILCON construction, any structure designed to last between 5 and 25 years of useful life. An example is an overseas free-standing contingency facility off-base.

Service Elevator. An elevator that is "narrow and deep" in configuration to move patients and vehicular type traffic between floors.

Shall. Indicates a mandatory requirement, synonymous with "will."

Should. Indicated a recommendation or alternative that is highly advised but not absolutely required.

SHDA. Surgical Handpiece Drive Air.

SID. Structural Interior Design. That portion of basic design services concerned with establishment of "motif," color and finish selection usually very early in the Concept Design phase of all fixed, "structurally related" finishes, i.e., walls, floors, ceilings, columns, fixtures, casework, equipment, exteriors, etc. as opposed to comprehensive Interior Design (CID) which is an option to design services and relates to moveable, mobile, portable equipment, fixtures, furnishings, etc. For unity of color selection and design, both the SID and the CID must be compatible, conform to the finish schedule, and coordinate early and throughout the design, procurement, construction, and installation processes. (See sections 2 and 4.) Simulation. The use of a computer program as a model of a real situation.

Six-Year Defense Program (SYDP). Includes all military construction projects proposed by the Military Departments for the next six (6) years. The program is updated annually. Synonymous with "Long-Range Plan."

SMDR. Station Master Detail Recording--telephone system.

Smoke Barrier. A smoke barrier is a continuous membrane, either vertical or horizontal, such as a wall, floor, or ceiling assembly, that is designed and constructed to restrict the movement of smoke. A smoke barrier may or may not have a fire resistance rating. Such barriers may have protected openings.

Smoke Compartment. A smoke compartment is a space within a building enclosed by smoke barriers on all sides including the top and bottom. In the provision of smoke compartments utilizing the outside walls or the roof of a building, it is not intended that outside walls, roofs or any opening therein be capable of resisting the passage of smoke.

Smoke Detector. A device that senses visible or invisible particles of combustion.

Special Care Unit (SCU). A medical care unit in which there is appropriate equipment and a concentration of physicians, nurses, and others who have special skills and experience to provide optimal care to critically ill patients.

Statement of Work or Scope of Work (SOW). A formalized document describing the details of an effort to be accomplished through contracted resources.

State-of-the-Art. The scientific and technical level attained at a given time.

Station Outlet. An outlet point in a piped medical gas distribution system at which the user makes connections and disconnections.

Status of Forces Agreements (SOFA). Agreements between the United States government and the government of a foreign nation (host nation) which allows U.S. Forces to engage in some activity (such as occupy, build, or otherwise have temporary rights) which otherwise would not be possible. SOFA agreements usually stipulate governing rules, codes and standards which must be followed in the course of construction on that nation's soil.

STC. Sound Transmission Class. A single-number rating system which compares the Sound Transmission Loss of a test specimen with a standard contour.

Sterilization. One of many methods of waste handling. Sterilization relates to rendering hazardous or infectious wastes harmless (i.e., free from living microorganisms, etc.) by antiseptic solution, heat, steam, and/or pressure.

Story. That portion of a building included between the upper surface of a floor and the upper surface of the floor or roof next above. Stories shall be counted starting at the primary level of exit discharge and ending at the highest occupiable level. For the purposes of this definition, the primary level of exit discharge of a building shall be that floor that is level with or above finished grade of this exterior wall line for 50 percent or more of its perimeter. All DoD facilities shall conform to this definition.

Street. Any public thoroughfare (street, avenue, boulevard) 30 ft (9.1 m) or more in width that has been dedicated or deeded to the public for public use and is accessible for use by the fire department in fighting fire. Enclosed spaces and tunnels, even though used for vehicular and pedestrian traffic, are not considered as streets for the purposes of this definition.

Street Floor. Any story or floor level accessible from the street or from outside the building at ground level with floor level at main entrance not more than three risers above or below ground level at these points and so arranged and utilized as to qualify as the main floor. Where, due to differences in street levels, there are two or more stories accessible from the street, each is a street floor for the purposes of this handbook. Where there is no floor level within the specified limits for a street floor above or below ground level, the building shall be considered as having no street floor.

SWDA. Solid Waste Disposal Act.

Systems Analysis. Analysis of a sequence of activities or management operations to determine which activities or operations are necessary and how they can be accomplished.

Systems Approach. 1) An approach which involves identifying and describing each component of a system process and determining the relationships among the stages, including the inputs and outputs for each stage, so that the functioning of the total process relative to its environment can be understood.

2) A strategy of problem definition and solution which emphasizes the interaction between problem elements and between the immediate problem and its larger context and which specifically avoids traditional methods of independent and separate treatment of the various elements.

Systems Integration. 1) The combination of a group of relatively independent parts into a coordinated whole to improve performance through controlled interaction.

2) The joint use of a component by two or more systems.

TA. Table of Allowance. An equipment allowance document which prescribes basic allowances of organizational equipment and provides the control to develop, revise, or change EAID.

T-AH. Hospital Ship.

TAMMIS. Theater Army Medical Management Information System. A developmental information processing system to support U.S. Army field medical activities linking them to appropriate DoD patient regulating and transportation agencies and to the hospitals of the Army Medical Service.

Task Illumination. Provisions for the minimum lighting required to carry out necessary tasks, including safe access to supplies and equipment and access to exits.

TDA. Table of Distribution and Allowances.

TDY. Temporary Duty.

TIA. Telecommunication Industry Association.

TOE. Table of Organization and Equipment.

Total Gross Area. The total area including intra-departmental circulation, inter-departmental circulation, walls and structure, mechanical space, and total net area.

Triage. The evaluation and classification of casualties for purposes of treatment and evacuation. It consists of sorting patients according to type and seriousness of injury and the establishment of priority for treatment and evacuation.

TSB. Telecommunications Systems Bulletin.

TSCA. Toxic Substances Control Act.

TSRS. Telephone Station Requirement Schedule.

UCA. Uniform Chart of Accounts. The formal cost accounting process for health care management in the three MILDEPS. Accumulates, through standard work center allocations, costs for inpatient and outpatient services.

UCA/ASDC. Uniform Chart of Accounts/Automated Source Data Collection. The system to automatically collect workload and cost allocation data associated with the Uniform Chart of Accounts.

UFAS (Uniform Federal Accessibility Standards). Published as 49 CFR 31528 on August 7, 1984, the Department of Defense adopted the UFAS on May 8, 1985, and published the UFAS as FED STD 795 on April 1, 1988.

UMCS. Utility Monitoring and Control Systems.

Universal X-Ray Room. The universal x-ray room shall be capable of accepting all routine radiographic, fluoroscopic, and tomographic equipment up to 1200 ma, 150 kvp, regardless of manufacture, during initial installation and subsequent replacement actions with little, if any, facility modification. The procedures shall be performed unencumbered and without any restriction of system components, patient size, or any known procedure that any installed X-ray equipment can perform now or in the future. This definition does not apply to digital radiography, special procedure rooms, C-arms, or angiography rooms. (See Appendix C).

UPS. Uninterruptible Power Supply. A system of batteries and capacitance power storage devices to preclude catastrophic failure of critically important information processing systems. During an electrical power failure, it provides a continuous flow of power to a computer system for a specified period of time during which system operators may shut down a system without loss of information or loss of data base addressing structures.

USA. Unites States Army.

USACE. United States Army Corps of Engineers.

USAF. United States Air Force.

USAMRDC. U.S. Army Medical Research and Development Command.

USC. United States Code.

Use Point. A room, or area within a room, where medical gases are dispensed to a single patient for medical purposes. A use point may comprise a number of station outlets of different gases.

Using Military Department. Synonymous with using Service, i.e., the U.S. Army, Navy, or Air Force.

USMC. United States Marine Corps.

USN. United States Navy.

USPS. United States Postal Service.

Value Engineering (VE). Value engineering studies consist of analyses of certain high cost areas of a design to determine if an alternate way exists to achieve the same or improved function at a lower life cycle cost. The main objectives of VE studies are reduced life cycle cost and improved quality of design. The application of value engineering shall not result in a lowering of criteria, quality standards, or reduction of scope as established by the guidance in this document. (See section 2).

VAV. Variable air volume.

Vehicular Traffic. This traffic is generally defined as that traffic that is pushed, or rolled into elevators on wheels. Examples of vehicular traffic are beds and gurneys. Wheelchairs are considered vehicular traffic where they are pushed by an escort or attendant, and where the occupant is a patient. Where wheelchairs carry staff or visitors, they are generally counted in with the pedestrian population since they would utilize passenger elevators.

Vertical Traffic Pattern. Peak elevator traffic in a medical complex is usually heavy multiple two-way, i.e., considerable traffic is being handled in both the UP and DOWN directions, with passengers and vehicles entering and exiting the cars at various floors throughout the elevator round trip. This differs considerably from commercial elevators where two-way peaks are primarily "lobby" related with minimal intermediate traffic and where one-way traffic peaks can be expected at predictable times. This type of heavy one-way peak is experienced in hospitals during shift changes, but there remains a large amount of opposing traffic at the same time, as well as substantial intermediate floor-to-floor travel. Proper planning, scheduling, and separation of traffic is required to ensure adequacy of service.

WAGD. Waste Anesthesia Gas Disposal.

WMP. War Mobilization Plan. Provides WRM programs and objective time frames for each location.

Working Drawings. The second half of the Design Phase which includes the final development of all contract documents to prepare for the bidding phase.

WRM. War Reserve Material. That material required to augment peacetime assets to completely support forces, missions, and activities reflected in DoD/JCS war plans.

X-Ray Installations (Long-Time Rating). A rating based on an operating interval of 5 minutes or longer.

X-Ray Installations (Mobile). X-ray equipment mounted on a permanent base with wheels and/or casters for moving while completely assembled.

X-Ray Installations (Momentary Rating). A rating based on an operating interval that does not exceed 5 seconds.

X-Ray Installations (Portable). X-ray equipment designed to be hand carried.

X-Ray Installations (Transportable). X-ray equipment to be installed in a vehicle or that may be readily disassembled for transport in a vehicle.