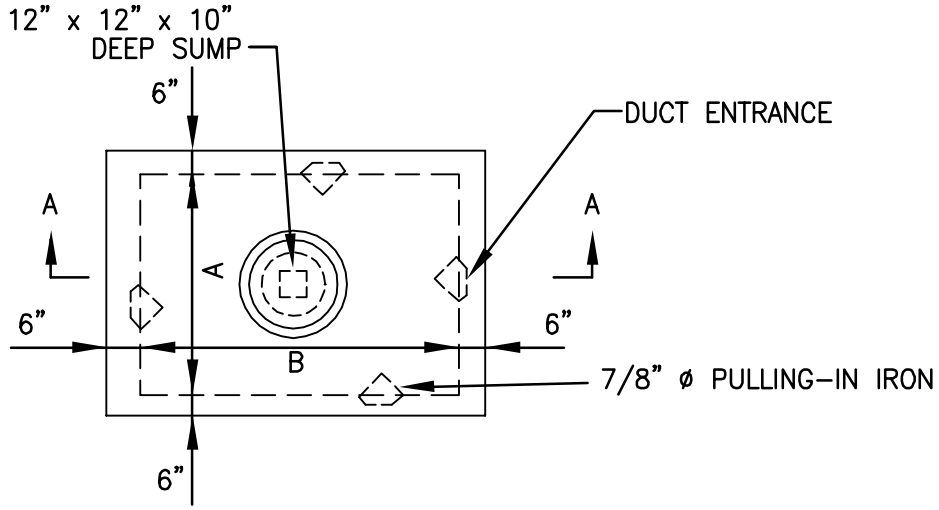

PLAN

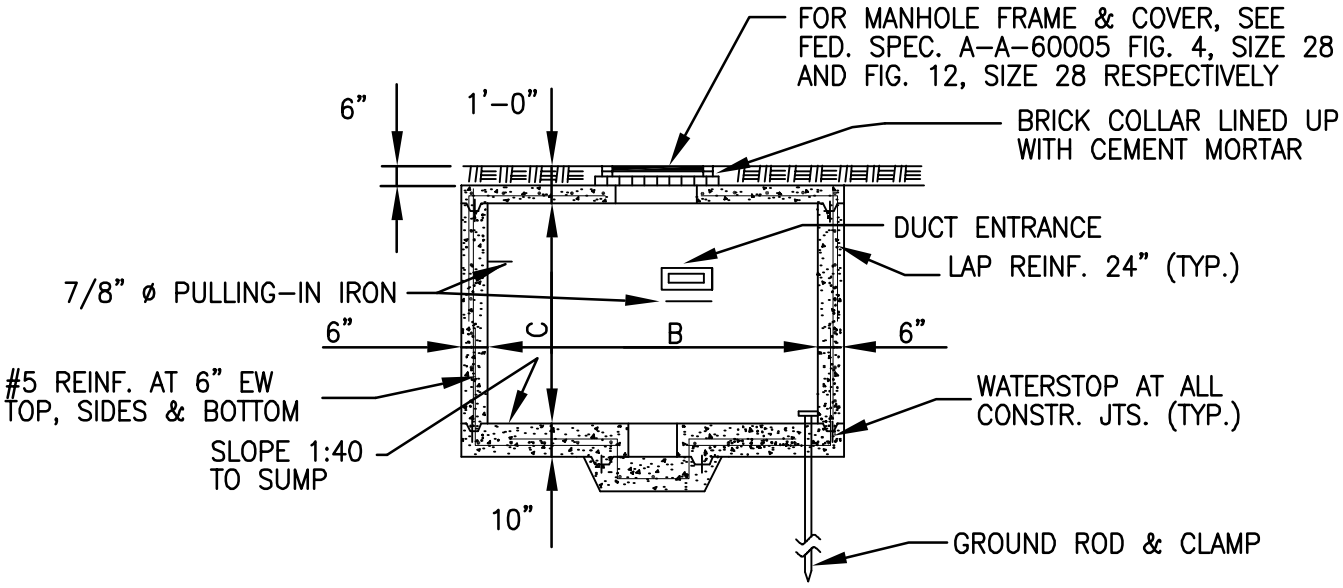

SECTION A–A

NOTES:

1. FOR DETAILS OF CABLE RACKS, DUCT ENTRANCE AND PULLING-IN IRONS, SEE PLATE UG-7.

2. MINIMUM CONCRETE COMPRESSIVE STRENGTH SHALL BE 3000 psi.

MANHOLE DIMENSIONS			
TYPE	A	B	C (AT HIGH PT.)
1	6'-0"	6'-0"	6'-6"
2	6'-0"	8'-0"	6'-6"

STANDARD ELECTRICAL MANHOLE (NONTRAFFIC)
TYPES 1 & 2

SKETCH DATE	FEBRUARY 2000	STYLE	UG-1

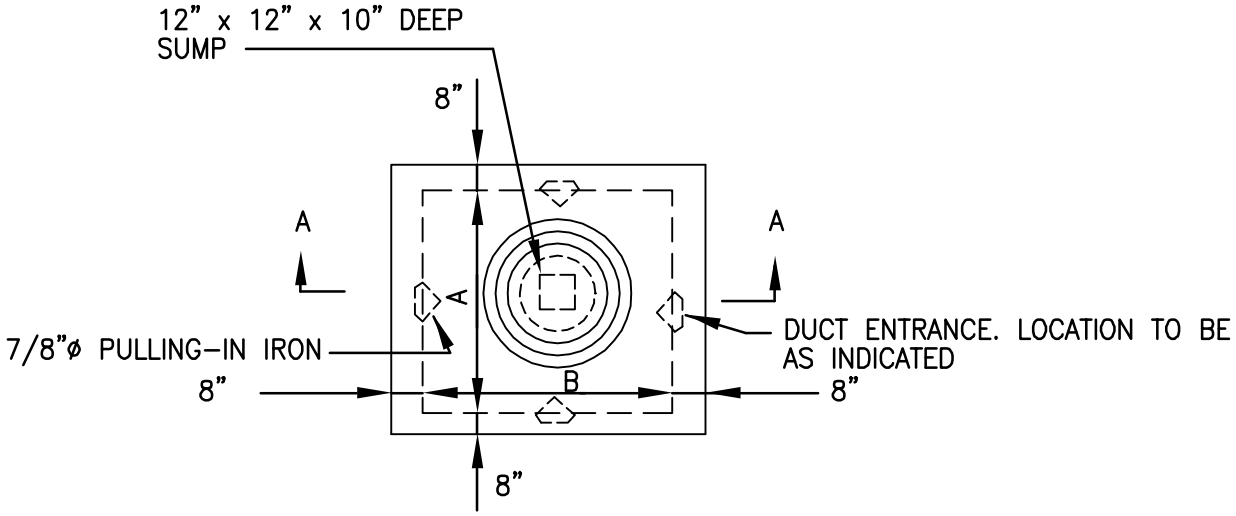

PLAN

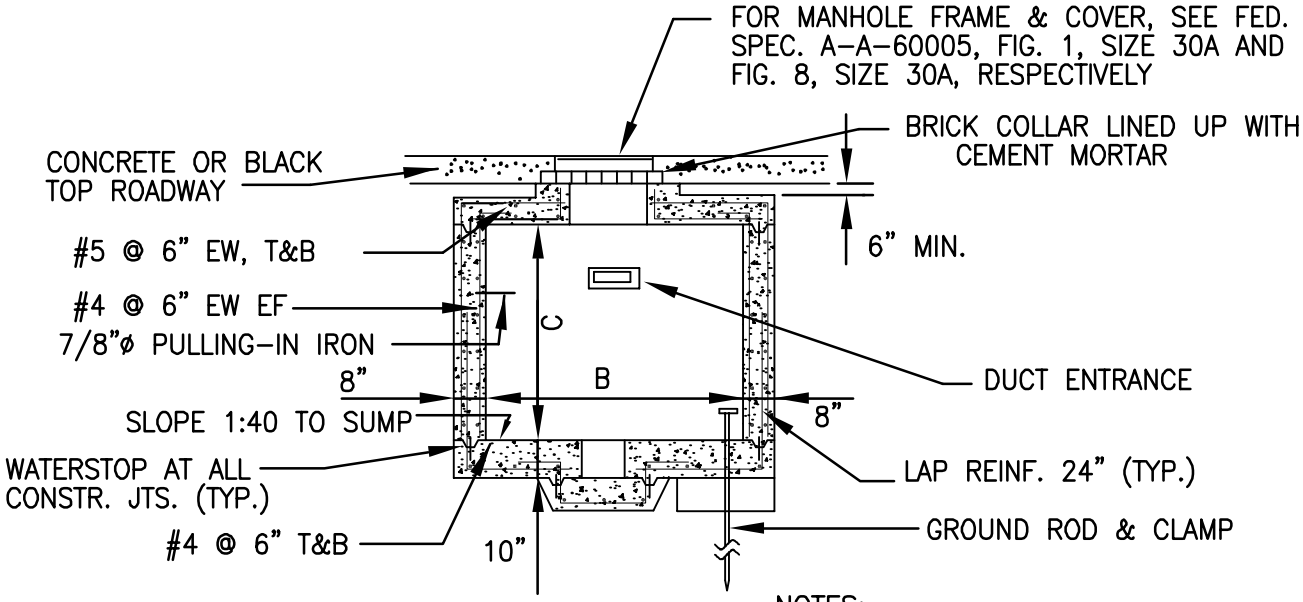

SECTION A-A

NOTES:

1. MANHOLE AND COVERS ARE DESIGNED FOR MAXIMUM WHEEL LOAD IN ACCORDANCE WITH AASHTO HS20-44.

2. FOR DETAILS OF CABLE RACKS, DUCT ENTRANCE AND PULLING-IN IRONS, SEE PLATE UG-7.

3. MINIMUM CONCRETE COMPRESSIVE STRENGTH SHALL BE 3000 psi.

MANHOLE DIMENSIONS			
TYPE	A	B	C (AT HIGH PT.)
3	6'-0"	6'-0"	6'-6"
4	6'-0"	8'-0"	6'-6"

STANDARD ELECTRICAL MANHOLE (TRAFFIC)
TYPES 3 & 4

SKETCH DATE	FEBRUARY 2000	STYLE	UG-2

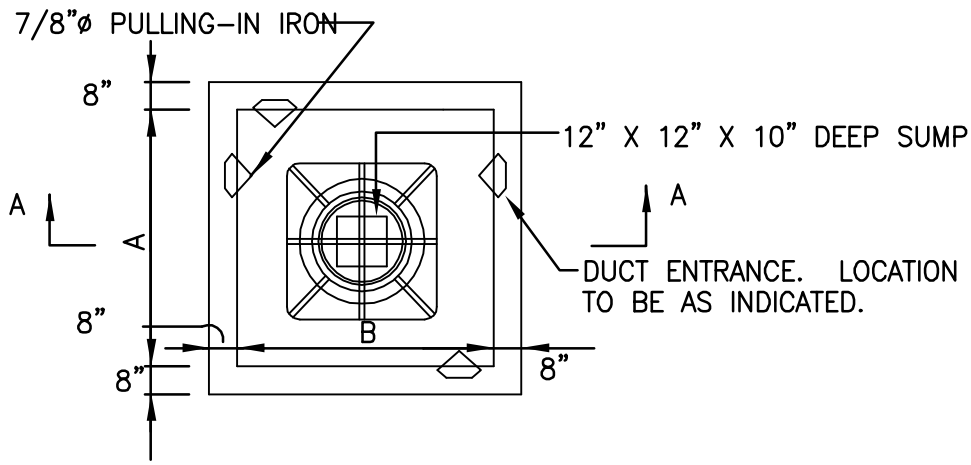

PLAN

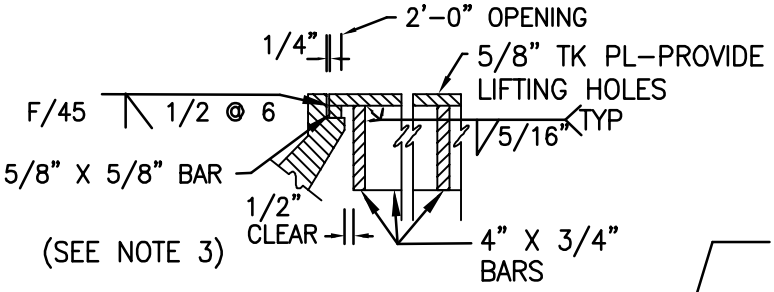

COVER DETAIL

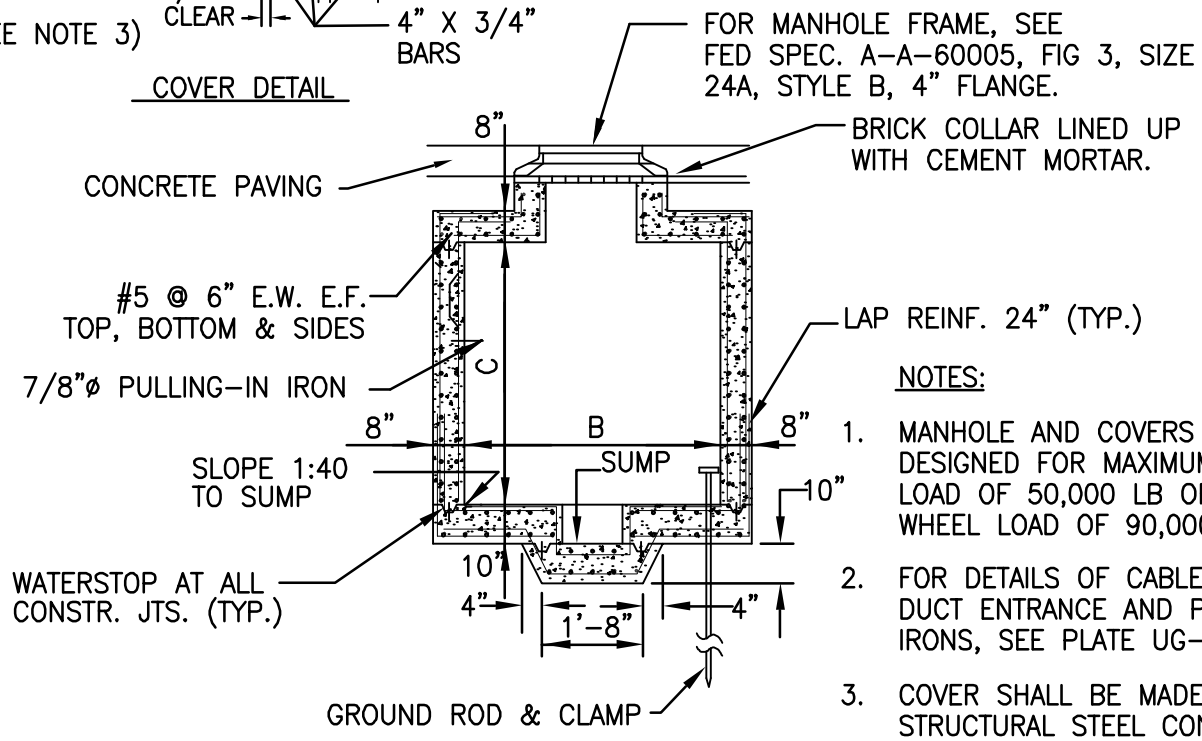

SECTION A-A

NOTES:

1. MANHOLE AND COVERS ARE DESIGNED FOR MAXIMUM WHEEL LOAD OF 50,000 LB OR DUAL WHEEL LOAD OF 90,000 LB.
2. FOR DETAILS OF CABLE RACKS, DUCT ENTRANCE AND PULLING-IN IRONS, SEE PLATE UG-7.
3. COVER SHALL BE MADE OF STRUCTURAL STEEL CONFORMING TO ASTM A 36/A 36M.
4. MINIMUM CONCRETE COMPRESSIVE STRENGTH SHALL BE 3000 psi.

MANHOLE DIMENSIONS			
TYPE	A	B	C (AT HIGH PT.)
5	6'-0"	6'-0"	6'-6"
6	6'-0"	8'-0"	6'-6"

STANDARD ELECTRICAL MANHOLE (AIRFIELD)
TYPES 5 & 6

SKETCH DATE	FEBRUARY 2000	STYLE	UG-3

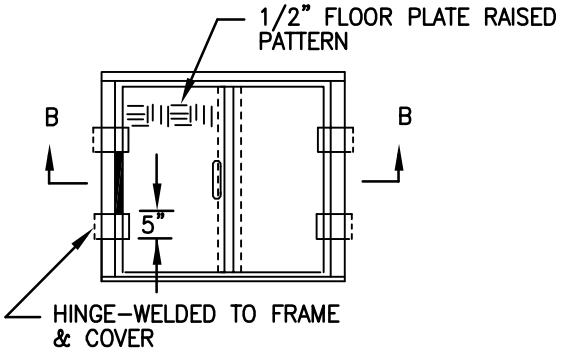

PLAN OF COVER

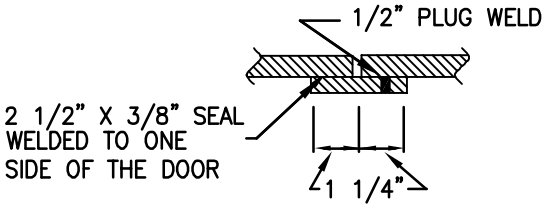

SEAL DETAIL

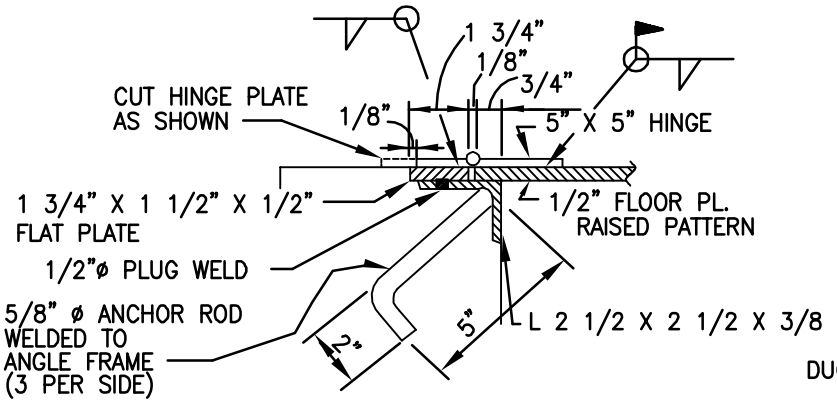

SECTION OF FRAME

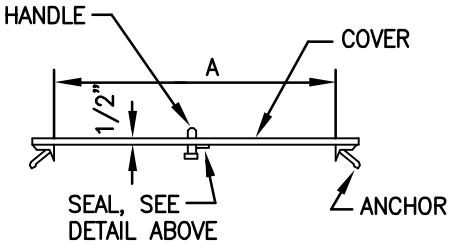

SECTION B–B

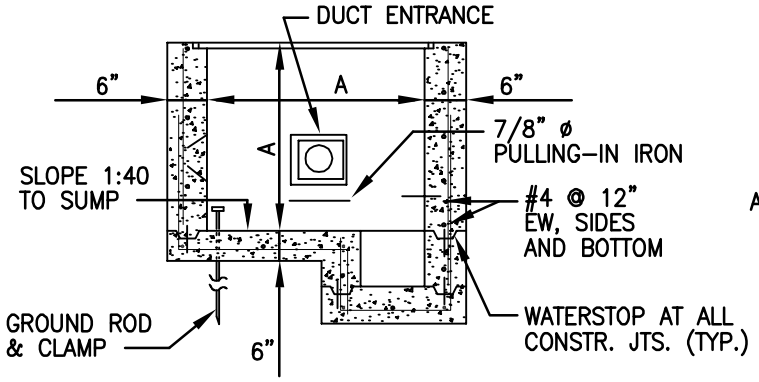

SECTION A–A

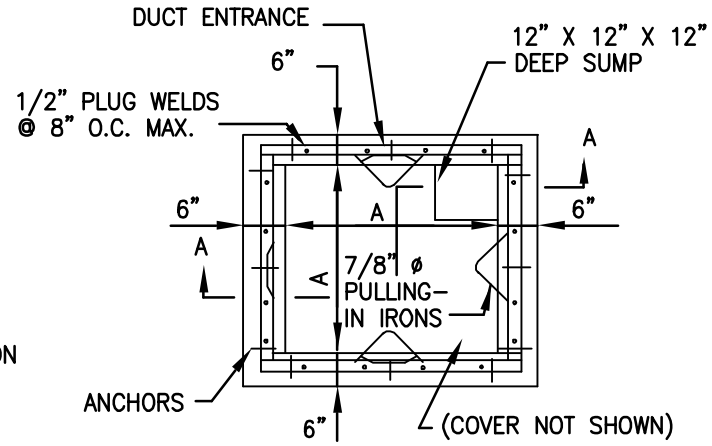

PLAN

HANDHOLE	DIMENSIONS
TYPE	A
1	3'–0"
2	4'–0"

NOTES:

1. FOR DETAILS OF CABLE RACKS, DUCT ENTRANCE AND PULLING–IN IRONS, SEE PLATE UG–7.
2. MINIMUM CONCRETE COMPRESSIVE STRENGTH SHALL BE 3000 psi.

STANDARD ELECTRICAL HANDHOLE (NONTRAFFIC)
TYPES 1 & 2

SKETCH DATE	FEBRUARY 1996	STYLE	UG–4

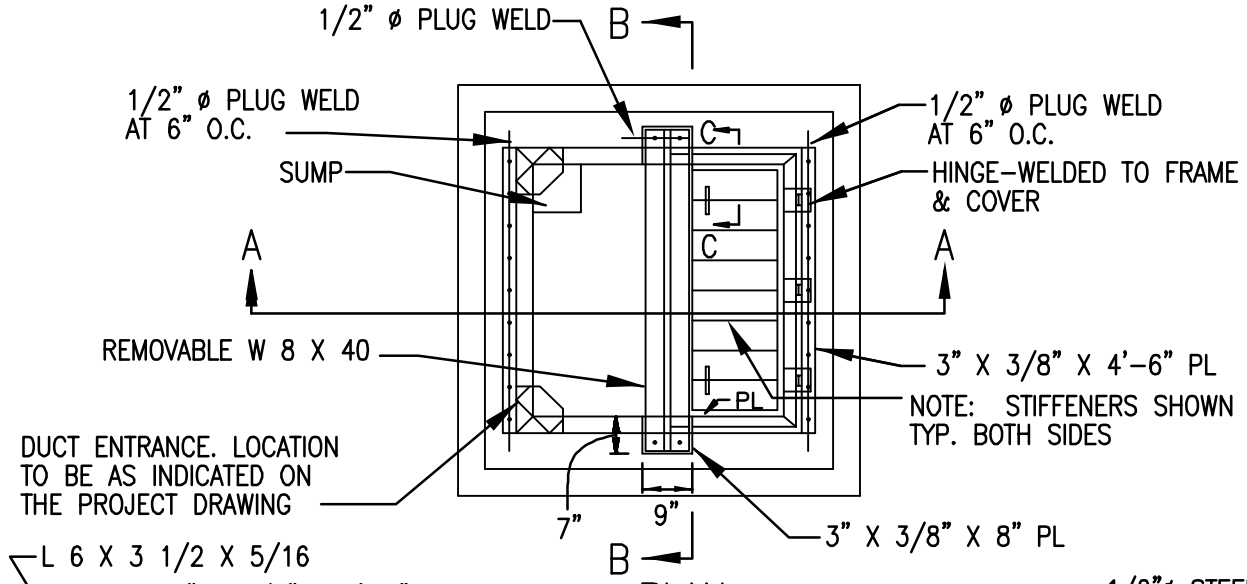

PLAN

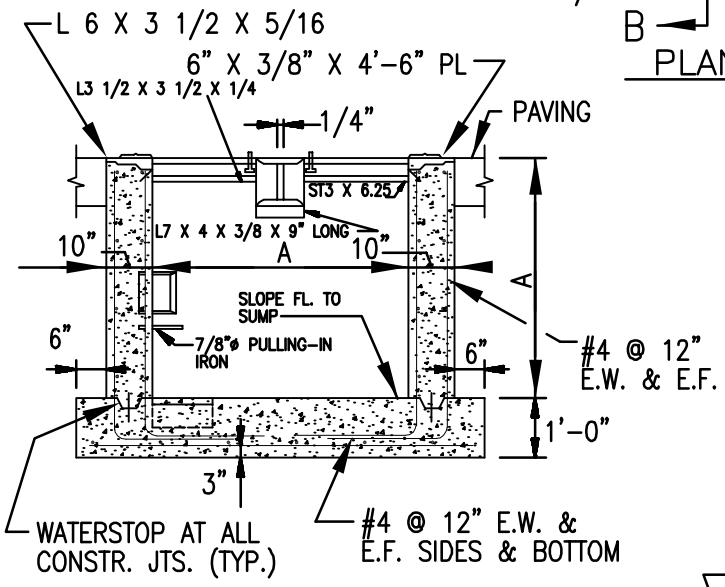

SECTION A–A

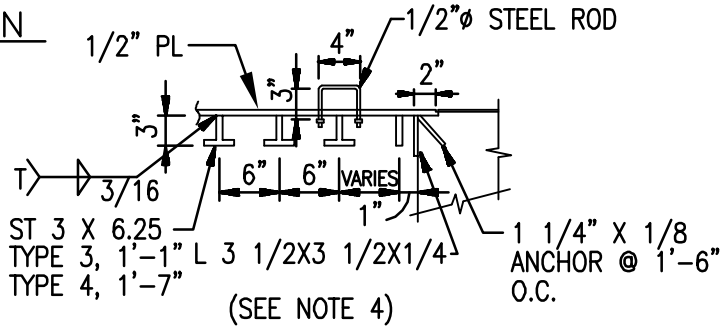

SECTION C–C

NOTES:

1. ENTRANCE OF DUCTS INTO HANDHOLE MAY BE MADE ON SIDE FACES OR CORNERS AS REQUIRED.
2. FOR DETAILS OF CABLE RACKS, DUCT ENTRANCE AND PULLING-IN IRONS, SEE PLATE UG-7.
3. HANDHOLE AND COVER IS DESIGNED FOR MAXIMUM SINGLE WHEEL LOAD OF 50,000 LB. OR DUAL WHEEL LOAD OF 90,000 LB.
4. COVER SHALL BE MADE OF STRUCTURAL STEEL CONFORMING TO ASTM A 36/A 36M.
5. MINIMUM COMPRESSIVE STRENGTH OF CONCRETE SHALL BE 3000 psi.

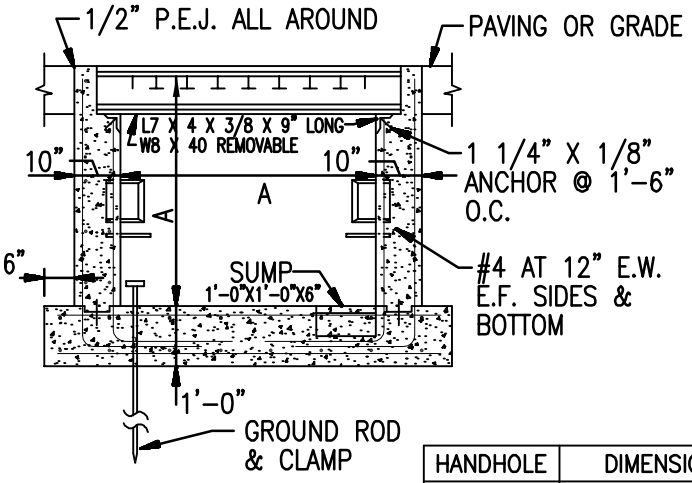

SECTION B–B

HANDHOLE	DIMENSIONS
TYPE	A
3	3'–0"
4	4"–0"

STANDARD ELECTRICAL HANDHOLE (TRAFFIC/AIRFIELD)
TYPES 3 & 4

SKETCH DATE	FEBRUARY 1996	STYLE	UG–5

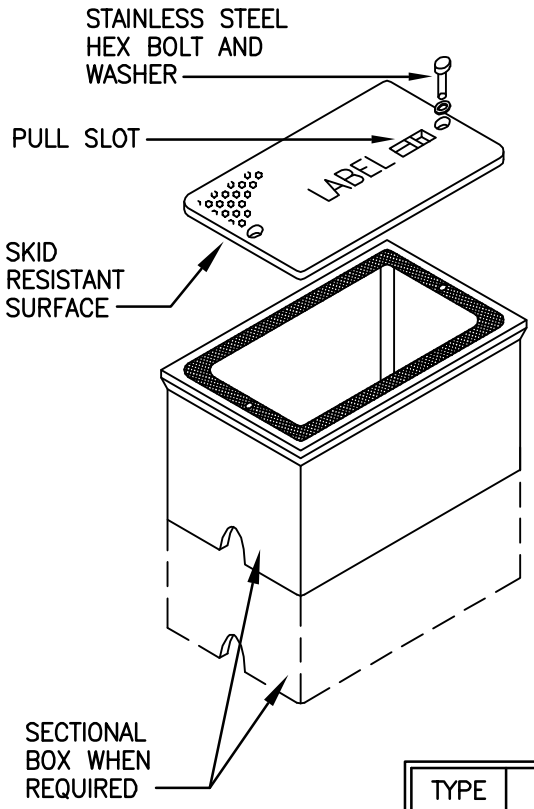

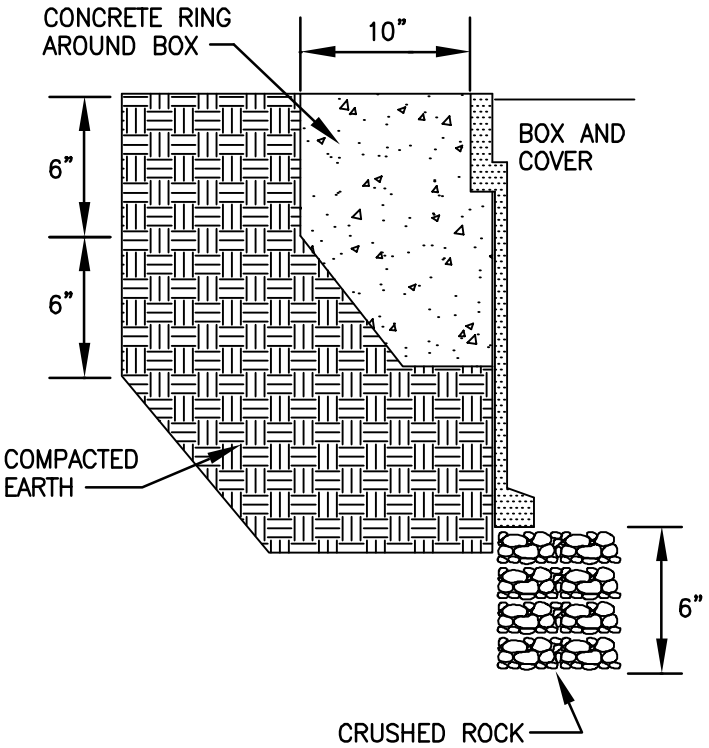

TYPE	HANDHOLE SIZING
5	12" X 12" X 24" DEEP
6	12" X 18" X 24" DEEP
7	12" X 24" X 24" DEEP
8	24" X 36" X 24" DEEP
9	30" X 48" X 24" DEEP

HANDHOLE REQUIREMENTS

1. HOUSING SHALL BE A POLYMER CONCRETE REINFORCED WITH A HEAVY WEAVE FIBERGLASS REINFORCING WITH COMPRESSIVE STRENGTH OF NO LESS THAN 10,000 psi.
2. COVER AND BOX SHALL WITHSTAND A SERVICE LOAD OF NO LESS THAN 15,000 LBS OVER A 10" x 10" AREA.
3. PROVIDE STAINLESS STEEL BOLTS AND INSERTS.
4. PROVIDE WITH (2) 2 1/2" MOUSEHOLES.
5. PROVIDE LABEL "ELECTRICAL" FOR POWER HANDHOLES OR "TELEPHONE" FOR TELEPHONE HANDHOLES, OR AS INDICATED.

STANDARD ELECTRICAL HANDHOLE (NONTRAFFIC)
(COMPOSITE/FIBERGLASS) TYPES 5, 6, 7, 8 & 9

SKETCH DATE	OCTOBER 1997	STYLE	UG—6

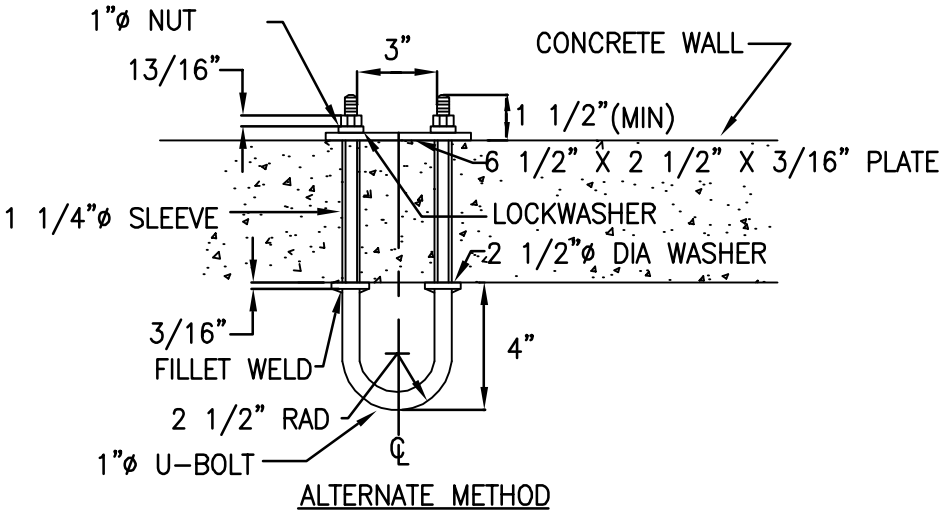

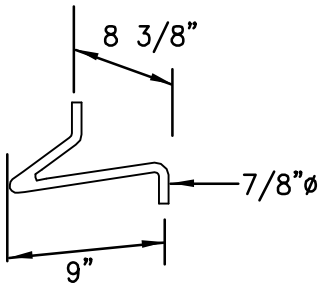

CAST IN PLACE

NOTE
ALL METAL PARTS SHALL BE HOT DIP GALVANIZED

DETAIL OF PULLING-IN IRON

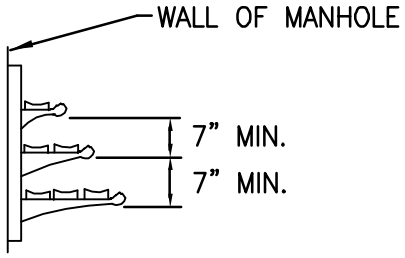

TYPICAL CABLE RACK

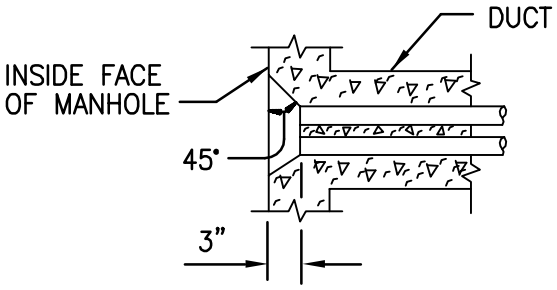

TYPICAL DUCT ENTRANCE

DETAILS
(PULLING-IN IRONS, CABLE RACK AND DUCT ENTRANCE)

SKETCH DATE	FEBRUARY 1996	STYLE	UG-7