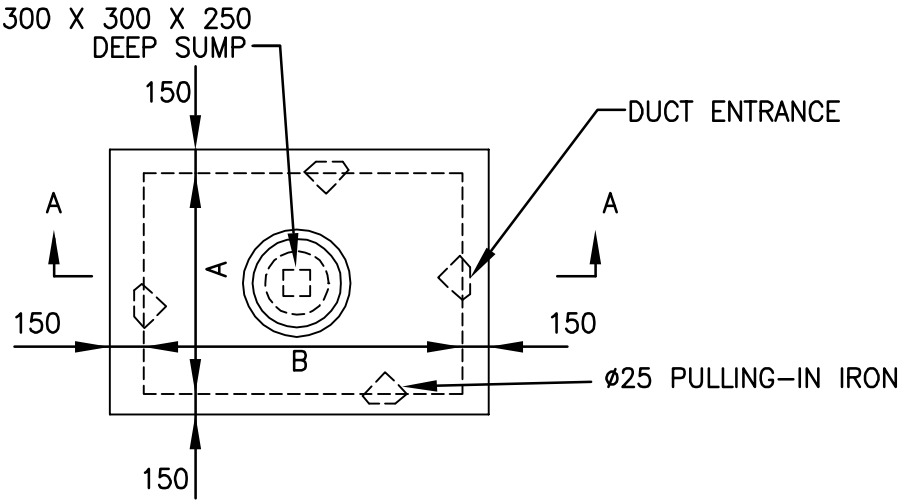

PLAN

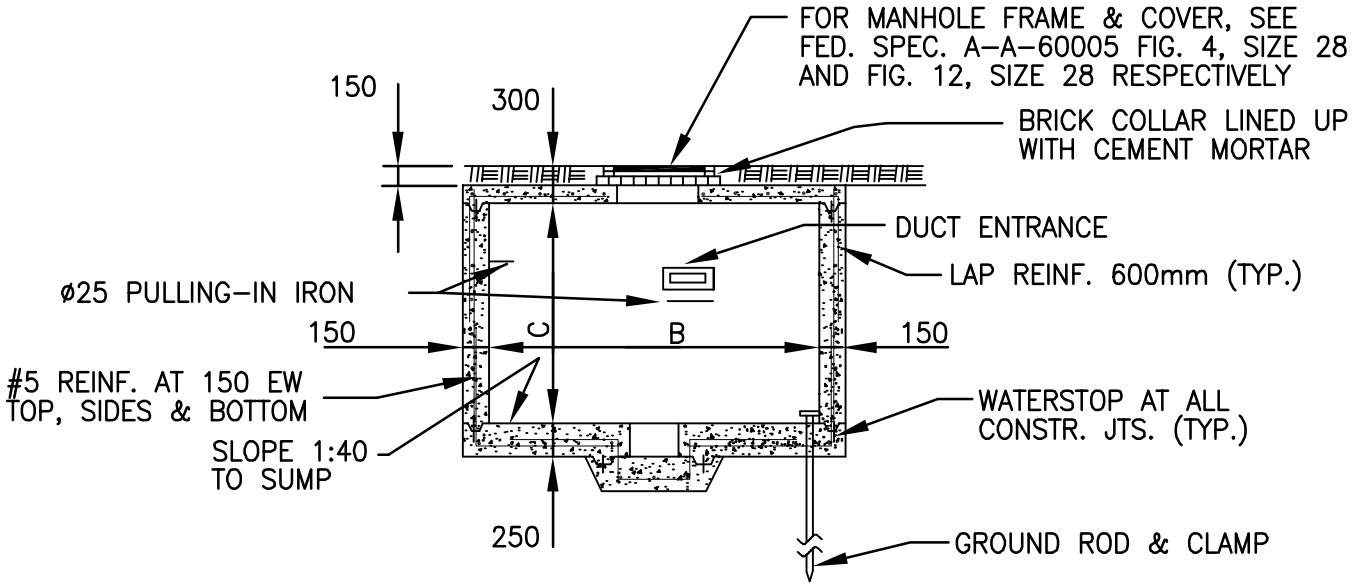

SECTION A-A

NOTES:

1. FOR DETAILS OF CABLE RACKS, DUCT ENTRANCE AND PULLING-IN IRONS, SEE PLATE UG-7.

2. MINIMUM CONCRETE COMPRESSIVE STRENGTH SHALL BE 21 MPa.

MANHOLE DIMENSIONS			
TYPE	A	B	C (AT HIGH PT.)
1	1800	1800	2000
2	1800	2500	2000

STANDARD ELECTRICAL MANHOLE (NONTRAFFIC) TYPES 1 & 2

SKETCH DATE	JUNE 2002	STYLE	UG-1

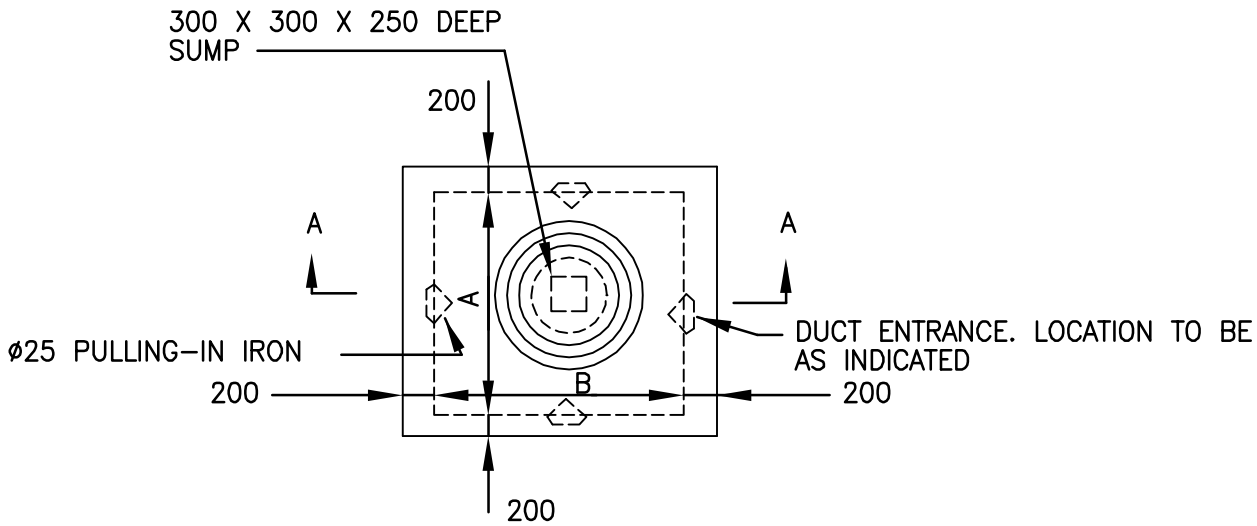

PLAN

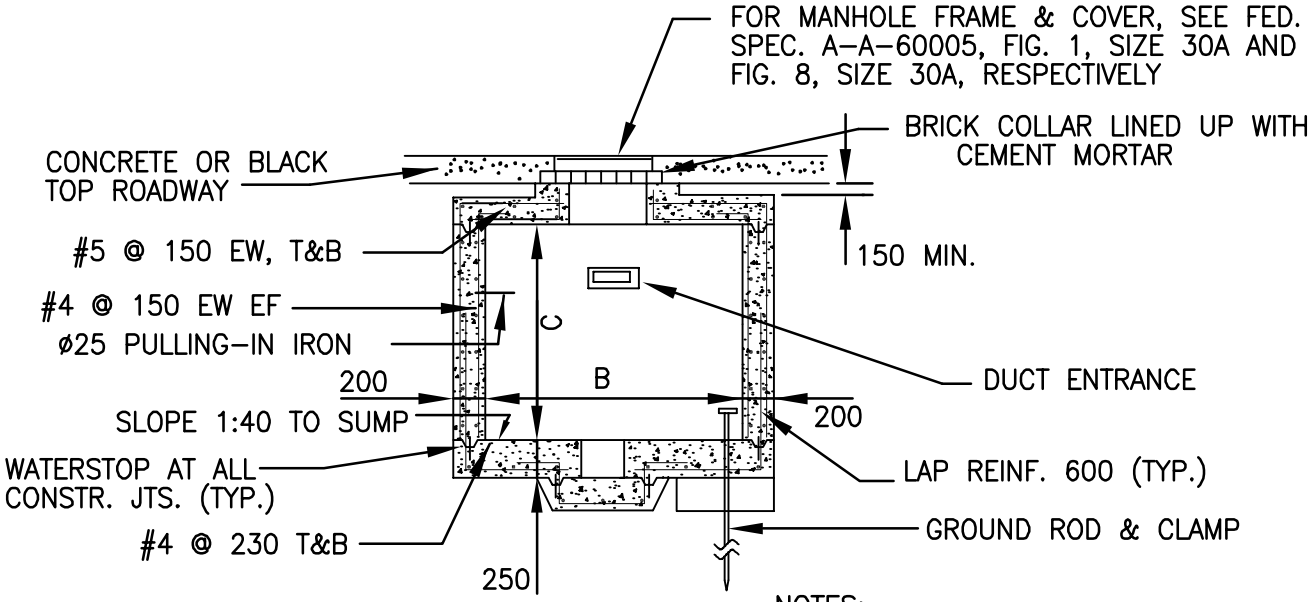

SECTION A-A

NOTES:

1. MANHOLE AND COVERS ARE DESIGNED FOR MAXIMUM WHEEL LOAD IN ACCORDANCE WITH AASHTO HS20-44.

2. FOR DETAILS OF CABLE RACKS, DUCT ENTRANCE AND PULLING-IN IRONS, SEE PLATE UG-7.

3. MINIMUM CONCRETE COMPRESSIVE STRENGTH SHALL BE 21 MPa.

MANHOLE DIMENSIONS			
TYPE	A	B	C (AT HIGH PT.)
3	1800	1800	2000
4	1800	2500	2000

STANDARD ELECTRICAL MANHOLE (TRAFFIC) TYPES 3 & 4

SKETCH DATE	JUNE 2002	STYLE	UG-2

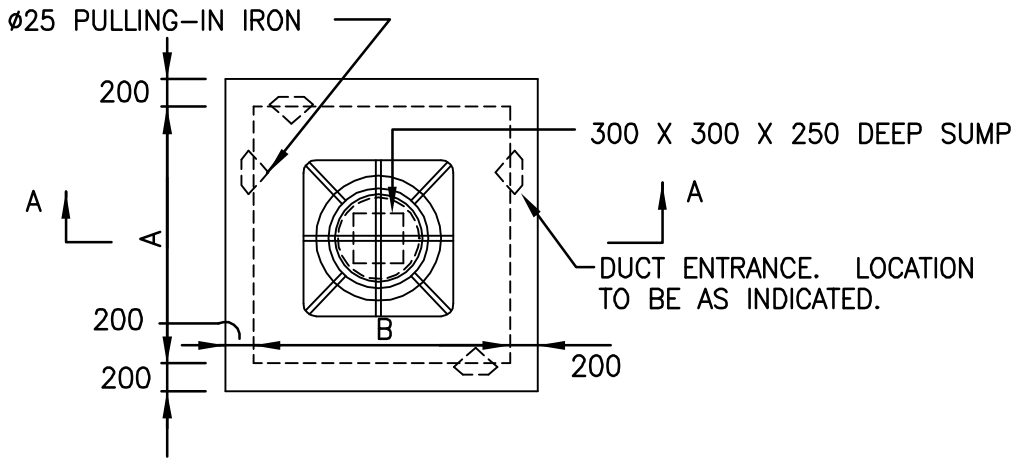

PLAN

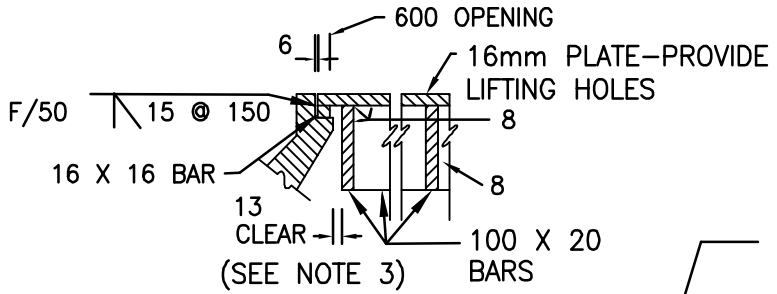

(SEE NOTE 3)
COVER DETAIL

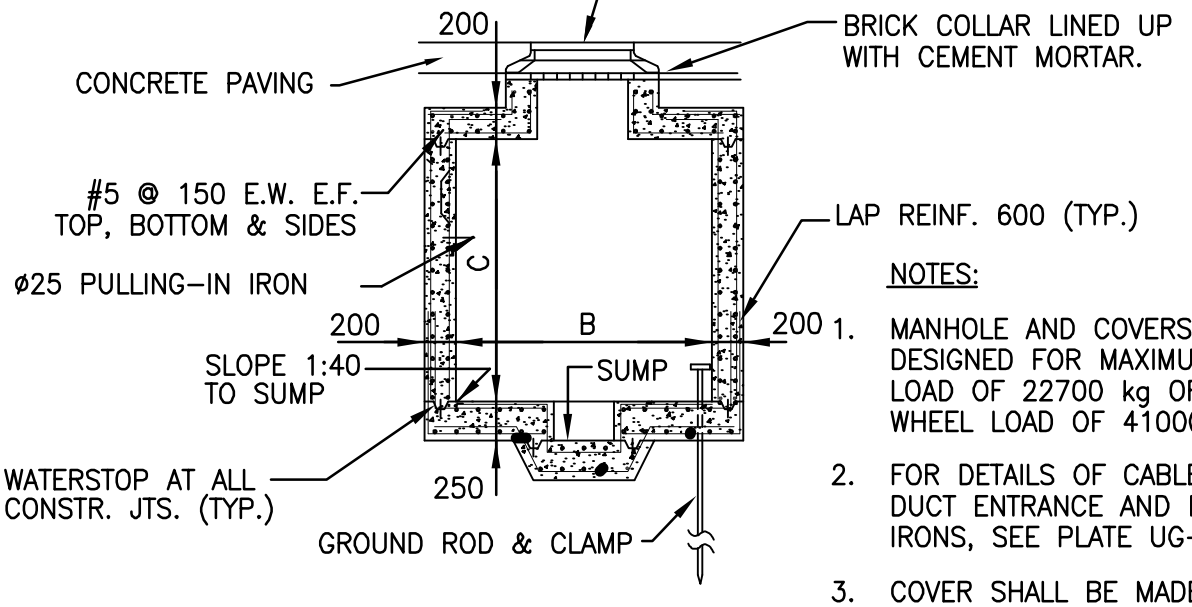

SECTION A–A

NOTES:

1. MANHOLE AND COVERS ARE DESIGNED FOR MAXIMUM WHEEL LOAD OF 22700 kg OR DUAL WHEEL LOAD OF 41000 kg.
2. FOR DETAILS OF CABLE RACKS, DUCT ENTRANCE AND PULLING–IN IRONS, SEE PLATE UG–7.
3. COVER SHALL BE MADE OF STRUCTURAL STEEL CONFORMING TO ASTM A 36/A 36M.
4. MINIMUM CONCRETE COMPRESSIVE STRENGTH SHALL BE 21 MPa.

MANHOLE DIMENSIONS			
TYPE	A	B	C (AT HIGH PT.)
5	1800	1800	2000
6	1800	2500	2000

STANDARD ELECTRICAL MANHOLE (AIRFIELD) TYPES 5 & 6

SKETCH DATE	JUNE 2002	STYLE	UG–3

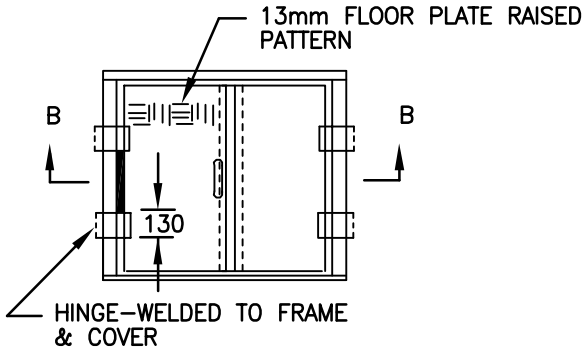

PLAN OF COVER

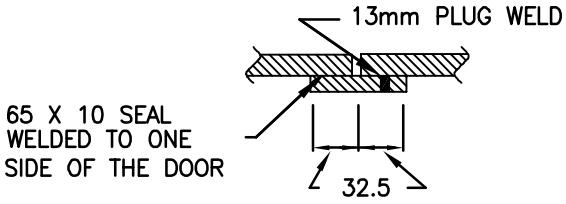

SEAL DETAIL

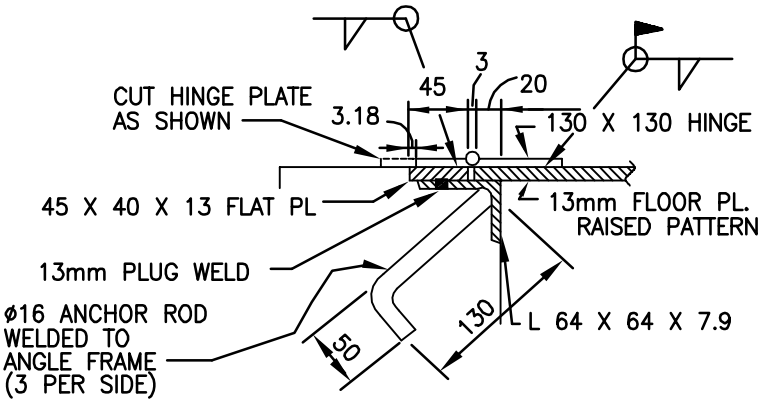

SECTION OF FRAME

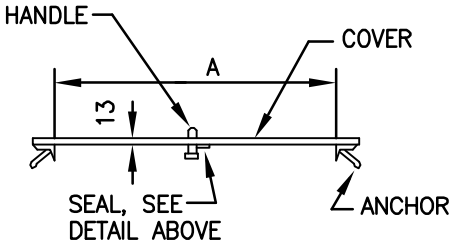

SECTION B–B

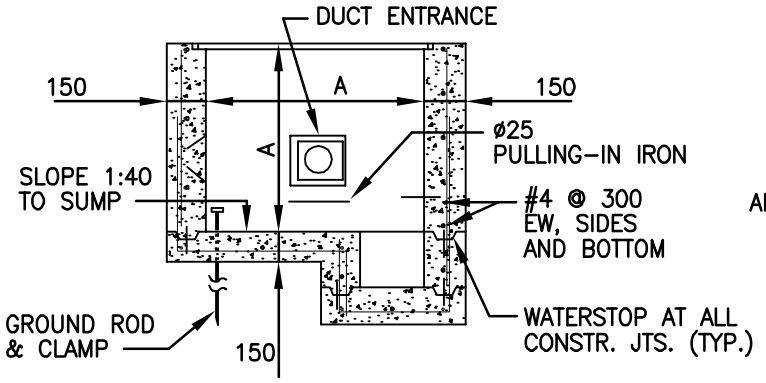

SECTION A–A

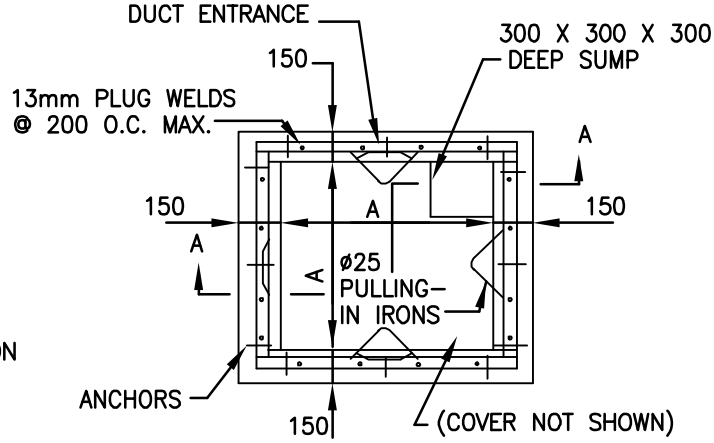

PLAN

HANDHOLE	DIMENSIONS
TYPE	A
1	1000
2	1250

NOTES:

1. FOR DETAILS OF CABLE RACKS, DUCT ENTRANCE AND PULLING–IN IRONS, SEE PLATE UG–7.
2. MINIMUM CONCRETE COMPRESSIVE STRENGTH SHALL BE 21 MPa.

STANDARD ELECTRICAL HANDHOLE (NONTRAFFIC) TYPES 1 & 2

SKETCH DATE	JUNE 2002	STYLE	UG–4

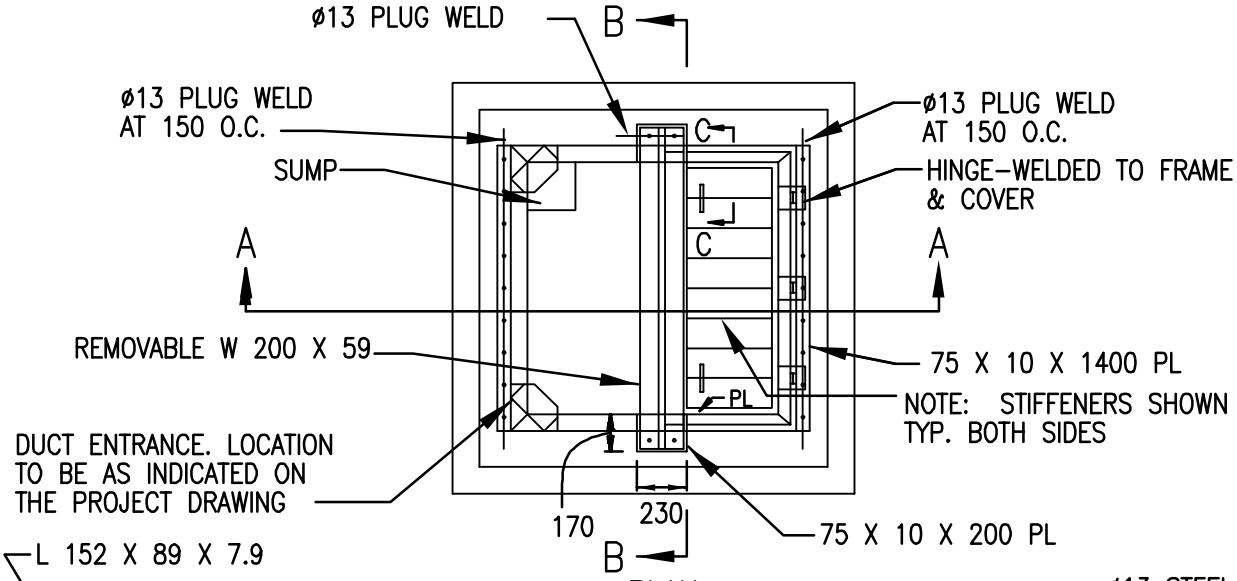

PLAN

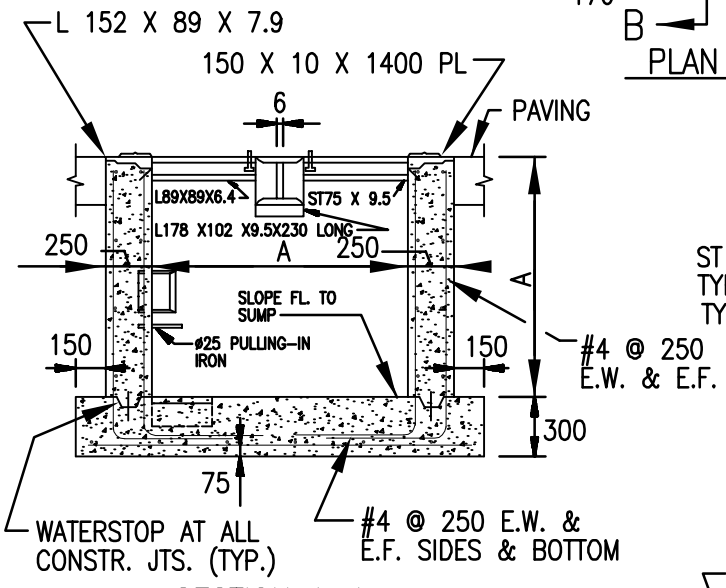

SECTION A-A

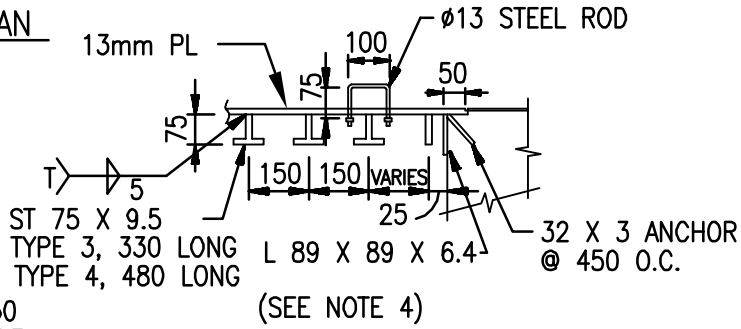

SECTION C-C

NOTES:

1. ENTRANCE OF DUCTS INTO HANDHOLE MAY BE MADE ON SIDE FACES OR CORNERS AS REQUIRED.
2. FOR DETAILS OF CABLE RACKS, DUCT ENTRANCE AND PULLING-IN IRONS, SEE PLATE UG-7.
3. HANDHOLE AND COVER IS DESIGNED FOR MAXIMUM SINGLE WHEEL LOAD OF 22700 kg OR DUAL WHEEL LOAD OF 41000 kg.
4. COVER SHALL BE MADE OF STRUCTURAL STEEL CONFORMING TO ASTM A 36/A 36M.
5. MINIMUM COMPRESSIVE STRENGTH OF CONCRETE SHALL BE 21 MPa.

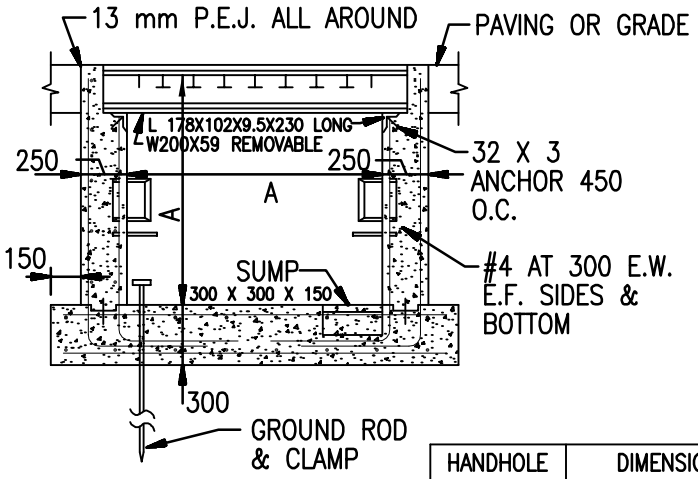

SECTION B-B

HANDHOLE	DIMENSIONS
TYPE	A
3	1000
4	1250

STANDARD ELECTRICAL HANDHOLE (TRAFFIC/AIRFIELD) TYPES 3 & 4

SKETCH DATE	JUNE 2002	STYLE	UG-5

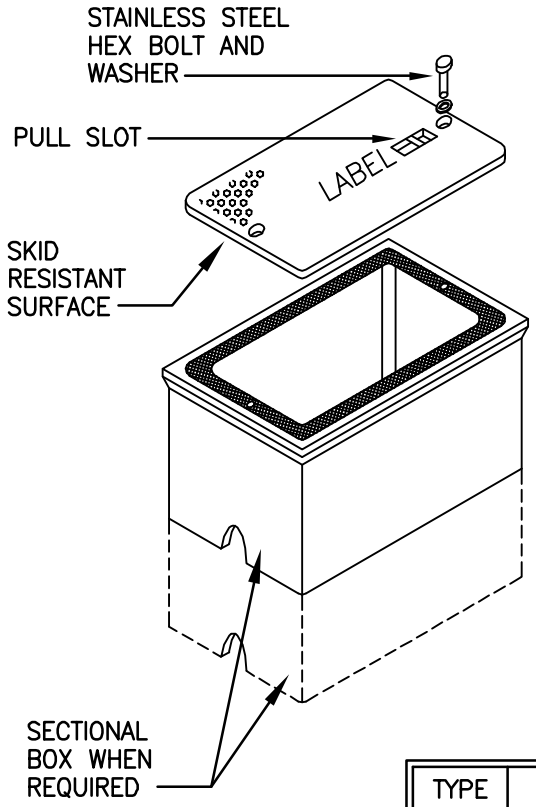

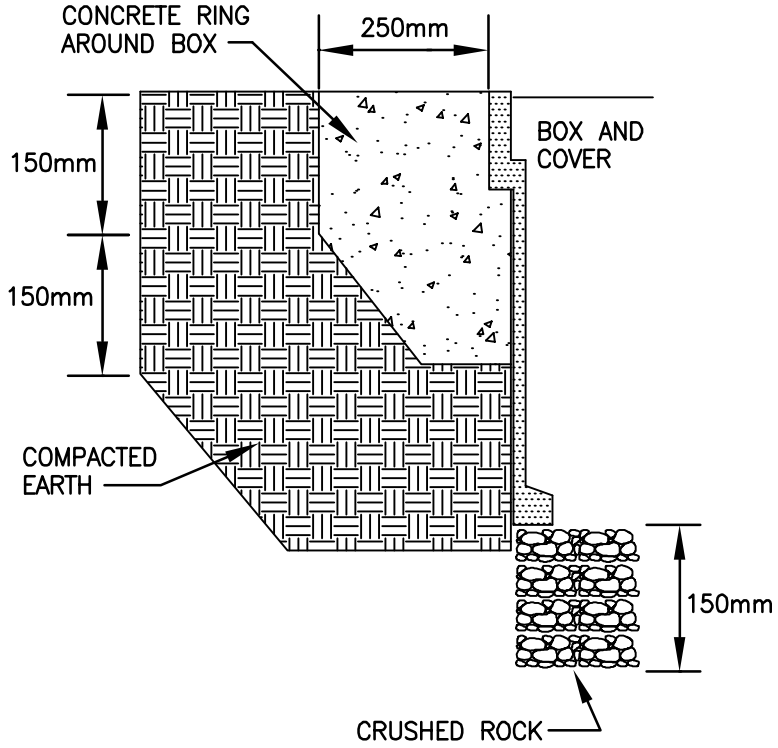

TYPE	HANDHOLE SIZING
5	300mm X 300mm X 600mm DEEP
6	300mm X 500mm X 600mm DEEP
7	300mm X 600mm X 600mm DEEP
8	600mm X 1000mm X 600mm DEEP
9	800mm X 1250mm X 600mm DEEP

HANDHOLE REQUIREMENTS

1. HOUSING SHALL BE A POLYMER CONCRETE REINFORCED WITH A HEAVY WEAVE FIBERGLASS REINFORCING WITH COMPRESSIVE STRENGTH OF NO LESS THAN 70 MPa.
2. COVER AND BOX SHALL WITHSTAND A SERVICE LOAD OF NO LESS THAN 6800 kg OVER A 250 x 250 AREA.
3. PROVIDE STAINLESS STEEL BOLTS AND INSERTS.
4. PROVIDE WITH (2) 64mm MOUSEHOLES.
5. PROVIDE LABEL "ELECTRICAL" FOR POWER HANDHOLES OR "TELEPHONE" FOR TELEPHONE HANDHOLES, OR AS INDICATED.

STANDARD ELECTRICAL HANDHOLE (NONTRAFFIC) (COMPOSITE/FIBERGLASS) TYPES 5, 6, 7, 8 & 9

SKETCH DATE	JUNE 2002	STYLE	UG–6

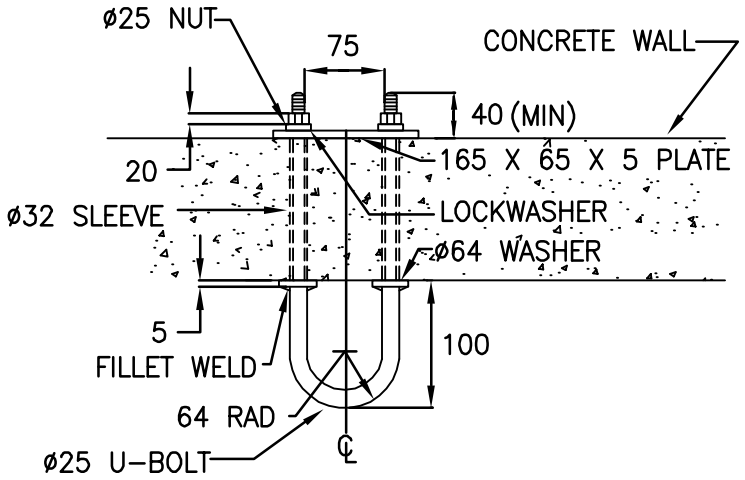

ALTERNATE METHOD

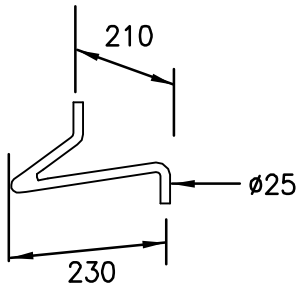

CAST IN PLACE

NOTE
ALL METAL PARTS SHALL BE HOT DIP GALVANIZED

DETAIL OF PULLING-IN IRON

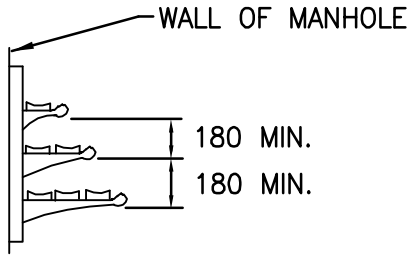

TYPICAL CABLE RACK

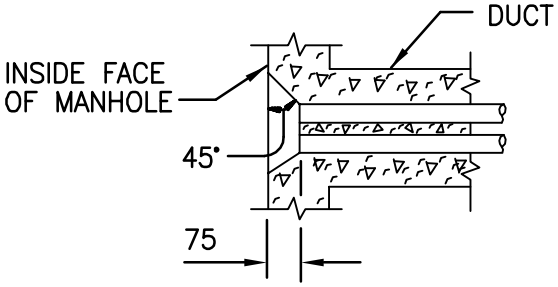

TYPICAL DUCT ENTRANCE

DETAILS
(PULLING-IN IRONS, CABLE RACK AND DUCT ENTRANCE)

SKETCH DATE	JUNE 2002	STYLE	UG-7