NOTICE OF INACTIVE
FOR NEW DESIGN

INCH-POUND

MIL-HDBK-1013/5
NOTICE 1
09 May 1997

DEPARTMENT OF DEFENSE
HANDBOOK

STEEL-PLY WALL HARDENING SELECTION AND INSTALLATION

MIL-HDBK-1013/5, dated 31 January 1988, and any subsequent revisions or change notices are inactive for new design and shall be no longer used as a guidance reference for new designs.

Custodian:
Navy - YD2

Preparing Activity:
Navy - YD2
(Project FACR-0236)

AMSC N/A

AREA FACR

MIL-HDBK-1013/5
31 JANUARY 1988

MILITARY HANDBOOK

STEEL-PLY WALL HARDENING SELECTION

AND INSTALLATION GUIDE

AMSC N/A

DISTRIBUTION STATEMENT A APPROVED FOR PUBLIC RELEASE: DISTRIBUTION IS UNLIMITED

AREA FACR

ABSTRACT

This publication provides guidance for the selection and installation of various steel and plywood wall hardening retrofit systems. The use of a selected system will provide additional protection to Naval arms, ammunition, and explosives against theft and sabotage by both increasing the time required for unauthorized entry and hardening the facility against ballistic penetration of small arms fire. The Naval Civil Engineering Laboratory (NCEL) has conducted various wall hardening tests, and the results are incorporated in this publication to assist in proper selection of materials. The criteria and considerations presented within this document complement the decision-making process found in the MIL-HDBK-1013/1, Design Guidelines For Physical Security of Fixed Land-Based Facilities.

FOREWORD

This military handbook has been developed from an evaluation of facilities in the shore establishment, from surveys of the availability of new materials and construction methods, and from selection of the best design practices of the Naval Facilities Engineering Command (NAVFACENGCOM), other Government agencies, and the private sector. It uses to the maximum extent feasible, national professional society, association, and institute standards. Deviations from this criteria, in the planning, engineering, design, and construction of Naval shore facilities, cannot be made without prior approval of NAVFACENGCOMHQ Code 04.

Design cannot remain static any more than can the functions it serves or the technologies it uses. Accordingly, recommendations for improvement are encouraged and should be furnished to the Naval Civil Engineering Laboratory, Code L30, Port Hueneme, CA 93043, (805) 982-5743.

THIS HANDBOOK SHALL NOT BE USED AS A REFERENCE DOCUMENT FOR PROCUREMENT OF FACILITIES CONSTRUCTION. IT IS TO BE USED IN THE PURCHASE OF FACILITIES ENGINEERING STUDIES AND DESIGN (FINAL PLANS, SPECIFICATIONS, AND COST ESTIMATES). DO NOT REFERENCE IT IN MILITARY OR FEDERAL SPECIFICATIONS OR OTHER PROCUREMENT DOCUMENTS.

PHYSICAL SECURITY CRITERIA MANUALS

Criteria Number	Title	PA
MIL-HDBK-1013/1	Physical Security of Fixed Land-based Facilities	NCEL
DM-13.02	Commercial Intrusion Detection Systems (IDS)	LANTDIV
MIL-HDBK-1013/3	Bolt-on Installation & Check-out Procedures for High-Security Hasp W/WO Anti-Intrusion Bar Cover	NCEL
MIL-HDBK-1013/4	Instruction for Design, Fabrication and Construction/Installation of Secure Enclosures	NCEL
MIL-HDBK-1013/5	Steel-Ply Wall Hardening Selection and Installation Guide	NCEL
MIL-HDBK-1013/6	High-Security Internal Locking System, Description, Operation, and Maintenance (PROPOSED)	NCEL
MIIL-HDBK-1013/7	Security Hardware Install., Operation & Maint. (PROPOSED)	NCEL

NOTE: Design manuals, when revised, will be converted to military handbooks.

This handbook is issued to provide immediate guidance to the user. However, it may or may not conform to format requirements of MIL-HDBK-1006/3 and will be corrected on the next update.

STEEL-PLY WALL HARDENING SELECTION AND INSTALLATION GUIDE

CONTENTS

		Page
Section 1:	INTRODUCTION	1
1.1	Scope	1
1.2	Cancellation	1
1.3	General Safety Notices	1
1.3.1	Personnel Requirements	1
1.3.2	First Aid and Resuscitation	1
1.3.3	General Precautions	1
1.3.4	Warnings	2
1.4	Related Technical Documents	3
Section 2:	STEEL-PLY WALL HARDENING	4
2.1	Safety Precautions	4
2.1.1	Warnings and Notes	4
2.1.2	Specific Precautions	4
2.2	Steel-Ply Wall Hardening Background	4
2.3	System Description	5
Section 3:	SYSTEM SELECTION AND INSTALLATION	11
3.1	Introduction	11
3.2	Panel Selection Criteria	11
3.2.1	Room Selection Criteria	11
3.2.2	Denial Time Criteria	13
3.3	Building Load Considerations	13
3.4	Earthquake Considerations	16
3.4.1	Perpendicular Wall Force	16
3.4.2	Lateral Wall Force	16
3.5	Panel Fabrication	16
3.6	Panel Installation	18

FIGURES

1	Ten-gage hot-rolled steel combinations	8
2	Nine-gage hot-rolled steel combinations	9
3	Polycarbonate combinations	10
4	Steps toward secure facility decision	12
5	Reachtruck with crane attachment	14
6	Typical construction cross section for perpendicular	

		Page
8	Typical maximum lateral earthquake force	18
9	Tongue-and-groove prefabrication option	19
10	Installation of laminates using powder-driven fastener	20
11	Fastening hardware	20
12	Panel-bolted assembly option (three-layer combinations only)	21
13	Using reachtruck to hold panel in place while driving fasteners	24
14	Application of furring strips to existing concrete block wall	27
15	Installation details, existing concrete block walls	28
16	Installation details, existing stud (wood or metal) wall	29
17	Recommended panel application for stud wall	30
18	CMU wall with interior finish	31
19	Typical section door openings	32
20	Orientation and sequence of installation when fabricated onsite	33
21	Corner detail	34
22	Base and ceiling trim detail	35
23	Suggested adhesive pattern	36

TABLES

1	Steel-ply wall hardening test and application data	6
2	Denial times for various existing construction and steel-ply installations (handtool and powertool attack)	15
3	Weights of 4- by 8-foot sheet stock	22
4	Panel installation tools	26
5	Wall preparation	26

BIBLIOGRAPHY 37

REFERENCES 38

INDEX 39

Section 1: INTRODUCTION

1.1 Scope. This publication provides guidance on selecting and installing retrofit systems to harden existing structures against unauthorized entry and ballistic penetration of small arms fire. Sufficient information is presented in this publication to enable personnel to select and install retrofit systems to harden existing structures.

This military handbook shall not be used as a reference document for procurement purposes. Further, it shall not be referenced in military or federal specifications or other procurement documents.

1.2 Cancellation. This handbook supersedes no other publication.

1.3 General Safety Notices. Warnings and notes appearing throughout this publication are of paramount importance to personnel and system safety. The following general safety notices supplement the specific warnings appearing in this publication. They are recommended precautions that must be understood and applied during installation of hardening structures covered herein. Should a situation arise that is not covered in the general or specific safety precautions, the Commanding Officer or other authority will issue orders as deemed necessary to cover the situation.

1.3.1 Personnel Requirements. Do not install alone. Under no circumstances shall movement or installation of hardening stock be attempted without the immediate presence of an individual capable of rendering aid.

1.3.2 First Aid and Resuscitation. An injury, no matter how slight, should never go unattended. Always get first aid or medical attention immediately. Should an individual stop breathing, initiate resuscitation immediately. A delay could cost the victim's life.

1.3.3 General Precautions.

(a) All signs and markings that pertain to safety measures shall be displayed.

(b) Personnel shall always wear protective eyeshields, clothing, and safety shoes during installation of sheet stock. Loose clothing that could catch on sharp corners shall not be worn.

(c) Manhandling heavy panels shall be avoided.

(d) All swinging loads shall be controlled by at least two taglines.

(e) A safety/fire watch shall be posted during movement of equipment or flame cutting operations. The safety watch shall take full precautionary measures to have immediate access to and be in full view of all moving equipment or flame-cutting operations for the safety of personnel.

(f) All fabrication, installation, and maintenance actions shall comply with appropriate policies, procedures, and guidelines provided in the Command

Safety and Health Program, Naval Facilites Engineering Command (NAVFAC) Instruction 5100.11, as well as all other pertinent NAVFAC 5100 series instructions.

1.3.4 Warnings. Warnings applying to the installation of hardening materials for existing structures, as covered in this publication, are summarized below. These warnings are repeated throughout the publication following paragraph headings and preceding text where they apply.

WARNINGS

Post KEEP AWAY placards along laminate delivery forklift route to installation site. (Page 23)

Always have sheet stock steadied by at least one man during transit via forklift and crane attachment. (Page 23)

Safety goggles must be worn by all personnel within direct line of sight of power actuator fastener drivers. (Page 23)

Safety goggles must be worn when cutting or drilling polycarbonate. (Page 23)

Do not attempt to manually lift or move sheets of stock without assistance. Serious injury may result from strains or dropped sheets. (Page 24)

Post KEEP OUT placard at each entrance to room being hardened. (Page 24)

Do not install panels alone. Under no circumstances shall movement or installation of stock be attempted without immediate presence of someone capable of rendering aid. (Page 24)

Personnel must remain clear of moving equipment. Whenever equipment is in motion, a safety watch having immediate access to and full view of operations being performed shall be posted. (Page 24)

Injuries, no matter how slight, should never go unattended. Always get first aid or medical attention immediately. If someone is injured and stops breathing, begin resuscitation immediately. Any delay could cost the life of the victim. (Page 24)

1.4 Related Technical Documents. The following drawing should be obtained to use with this document:

Physical Security; Steel-Ply System, Typical Sections and Details; NCEL Drawing Number 82-20-1F.

This drawing can be obtained from:

Naval Civil Engineering Laboratory
Physical Security Division (Code L56)
Port Hueneme, California 93043-5003

Section 2: STEEL-PLY WALL HARDENING

2.1 Safety Precautions

2.1.1 Warnings and Notes. Warnings and notes appearing throughout this publication are of paramount importance to personnel and system safety. Prior to any attempt to select or install any part of a wall hardening system, all warnings and notes shall be thoroughly reviewed and understood. Refer to the Introduction section of this publication for a complete listing of warnings and notes throughout this publication. The following paragraphs define warnings and notes as they are used in this publication.

WARNING

Identifies an installation or maintenance procedure, practice, condition, statement, etc., that, if not strictly followed, could result in death or serious injury to personnel.

NOTE

Highlights certain installation or maintenance statements that are essential but not of known hazardous nature as indicated by warnings.

2.1.2 Specific Precautions. Personnel responsible for wall hardening systems shall become thoroughly familiar with and frequently review the following specific safety precautions. These precautions apply to both personnel and equipment and are considered supplemental to the general precautions and specific notes listed in the Introduction section of this publication.

(a) Do not install or make any repairs to a wall hardening system without first reading and understanding the appropriate portions of this publication.

(b) Personnel shall always wear protective eyeshields, clothing, and safety shoes when installing a wall hardening system.

2.2 Steel-Ply Wall Hardening Background. Secure facilities are needed to protect Naval assets, especially weapons and explosives (OPNAVINST 5530.13, Chapter VIII, page VIII-2, Paragraph 8-201), from theft and sabotage. This guide includes easily installed, low-cost methods for hardening existing structures against unauthorized entry and ballistic penetration of small arms fire. Ballistic hardening is mainly for the protection of personnel in facilities such as armories, communication centers, or guard booths. Modifying an existing structure to increase its penetration time to a desired level is usually less expensive and more expeditious than building a new facility to the desired hardness level.

2.3 System Description. Seven retrofit systems for walls are described in this guide. These systems vary in cost, installation procedure, and the degree of additional penetration time achieved. The systems consist of panels fabricated from combinations of plywood, steel, and polycarbonate sheets that can be attached to existing walls in a variety of ways. The user decides which system most closely meets the requirements and budget. The seven systems are described in Table 1 and Figures 1 through 3. Ceiling and floor hardening techniques, doors, hasps, and locks are not covered in this guide. For information relative to hardening such items, refer to MIL-HDBK-1013/1.

Table 1
Steel-Ply Wall Hardening Test and Application Data[a]

Item	Figure	Layering System	Weight (lb/ft^2)	Est. Matl[b] Cost ($\$/ft^2$)	Minimum Denial Time (min)	Ballistic Penetration Resistance at 25-Yard Range
1	1	Two layers of 10-gage hot rolled steel, ASTM A569. One layer of 3/4-in exterior grade plywood.	13.2	3.4	6[c]	Not recommended
2	1	Three layers of 10-gage hot rolled steel, ASTM A569. Two layers of 3/4-in exterior grade plywood.	20.9	5.4	11[c]	Not recommended
3	2	Two layers of 9-gage ASTM A607 high-strength, low alloy steel. One layer of 3/4-in exterior grade plywood.	14.4	3.9	14[c,d]	5.56 mm ammunition fired from an M-16 rifle. .45 caliber ammunition fired from an automatic pistol. 9 mm hard-nose ammunition fired from a Schmeiser submachine gun.

[a] Test data from NCEL Technical Data Sheets 80-02 and 82-04.
[b] Estimated cost of sheet material (Washington, DC area, 1985).
[c] Total working time (excluding time for setup, changing blades, work breaks, etc.) required to cut a man-passable opening (9 by 12 inches) with a 1/2-inch electric drill and electrically powered reciprocating hacksaw.
[d] Also capable of a 5-minute denial time when cutting a 9- by 12-inch opening with an oxygen lance (burn bar); denial time for equal thickness of solid mild steelplate is less than 3 minutes.

Table 1. Continued

Item	Figure	Layering System	Weight (lb/ft^2)	Est. Matl[b] Cost ($\$/ft^2$)	Minimum Denial Time (min)	Ballistic Penetration Resistance at 25-Yard Range
4	2	Two layers of 9-gage ASTM A607 high-strength, low alloy steel. One layer of 3/4-in exterior grade plywood. Two layers of 90-lb gravel-finish roofing paper.[e]	16.2	4.2	20[e]	Not tested, but would be same as item 3.
5	2	Three layers of 9-gage ASTM A607 high-strength, low-alloy steel. Two layers of 3/4-in exterior grade plywood.	22.8	6.2	Not tested	5.56 mm ammunition A607 from an M-16 rifle.[f] 7.62 NATO ball ammunition fired from an M-14 rifle.
6	3	3-layer system - 1/4-in, type 304 stainless steel; 1/2-in polycarbonate; 10-gage ASTM A607 high-strength low-alloy steel, 0.88 in total thickness.	18.7	21.6	10	None.
7	3	5-layer system - three layers of 10-gage ASTM A607 high-strength, low-alloy steel; two layers 1/2-in polycarbonate, 1.4 in total thickness.	22.6	24.4	17	Only penetrated[g] by second round through previous round's partial penetration.

[e] Roofing paper increases the denial time against thermal tools.
[f] M-2 armor-piercing ammunition fired from a .30-06 sporting rifle is capable of completely penetrating this system.
[g] 25-yard range with 7.62 NATO ball ammunition fired from an M-14 rifle.

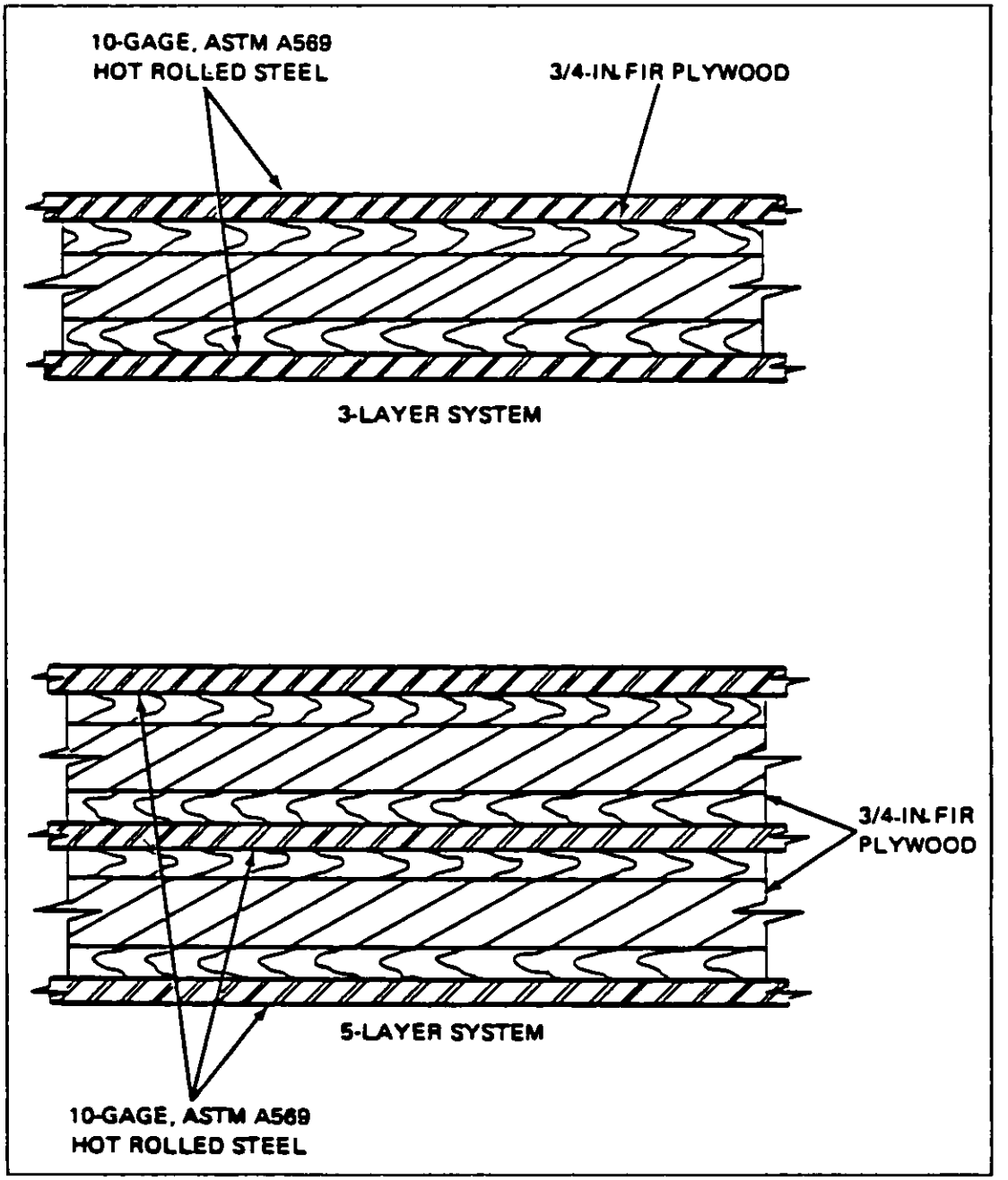

Figure 1. Ten-gage hot-rolled steel combinations.

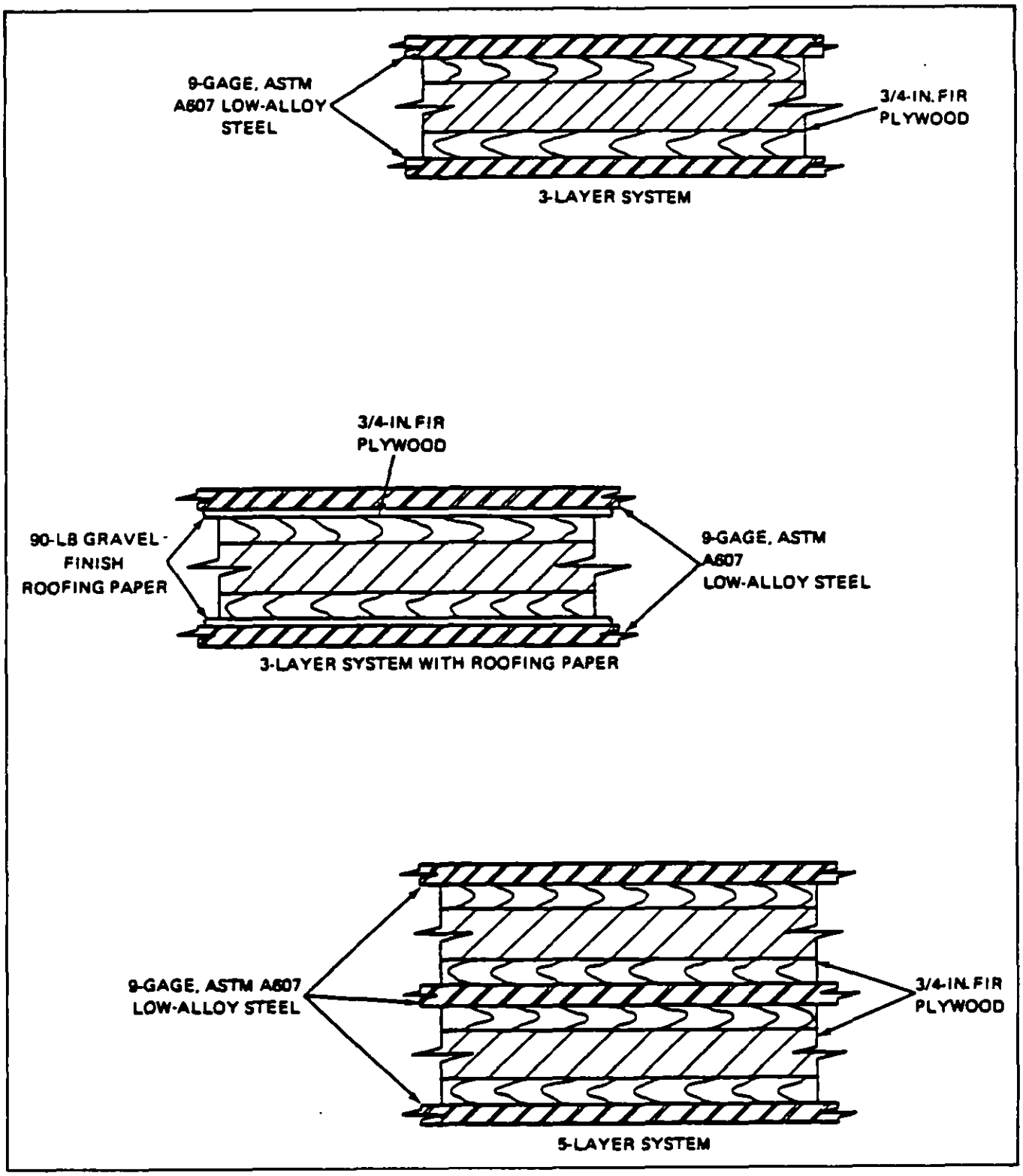

Figure 2. Nine-gage hot-rolled steel combinations.

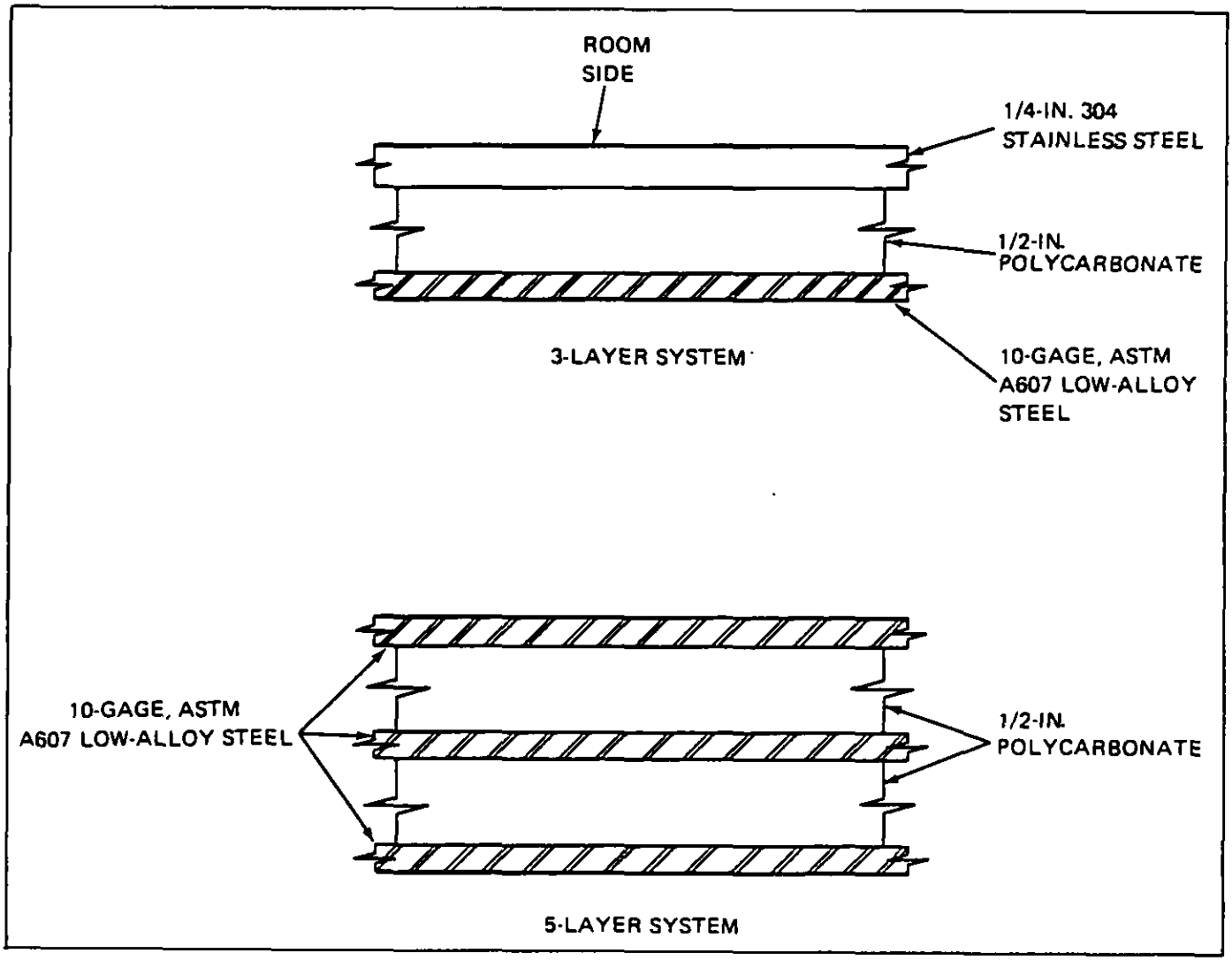

Figure 3. Polycarbonate combinations.

Section 3: SYSTEM SELECTION AND INSTALLATION

3.1 Introduction. This section provides the criteria necessary for panel selection and the step process required to determine security requirements. It also discusses the criteria for selecting a particular room to harden and the basis used in testing to demonstrate denial time in relationship to various existing construction materials.

3.2 Panel Selection Criteria. Selection of the type of panel to use is related to the overall building security system and the candidate rooms for hardening. As an aid to decision making, the user is referred to MIL-HDBK-1013/1. Figure 4 illustrates a recommended decision making process that leads to the degree of security required (denial time) for the assets to be protected.

3.2.1 Room Selection Criteria. Selection of a particular room for hardening should be based on the following:

(a) Protection of personnel

(b) Threat of theft, sabotage, or vandalism

(c) Load capacity of existing walls, floor, and structure

(d) Monetary value of planned contents

(e) Intrusion detection systems (IDS) and guard response time.

With the above in mind, candidate rooms and panel types can be examined from the standpoint of cost and security as follows:

(a) Calculate the needed volume of the secure area.

(b) Establish the minimum delay time requirement. This depends on the installed IDS and the guard response time after an alarm is sounded.

(c) Establish the maximum budget.

(d) Locate a suitable existing room.

(e) Choose a wall hardening system (Table 1) which, when added to the existing wall denial time, has a denial time that equals or exceeds the minimum delay time established in Step (b).

(f) Estimate the cost to install the system chosen in Step (e), and determine if the established budget can be met.

(g) Discuss the problem with the security officer if the planned program exceeds the budget. Adjustments that will reduce time can be made to patrol and guard schedules, thereby allowing the option of choosing a less expensive hardening system.

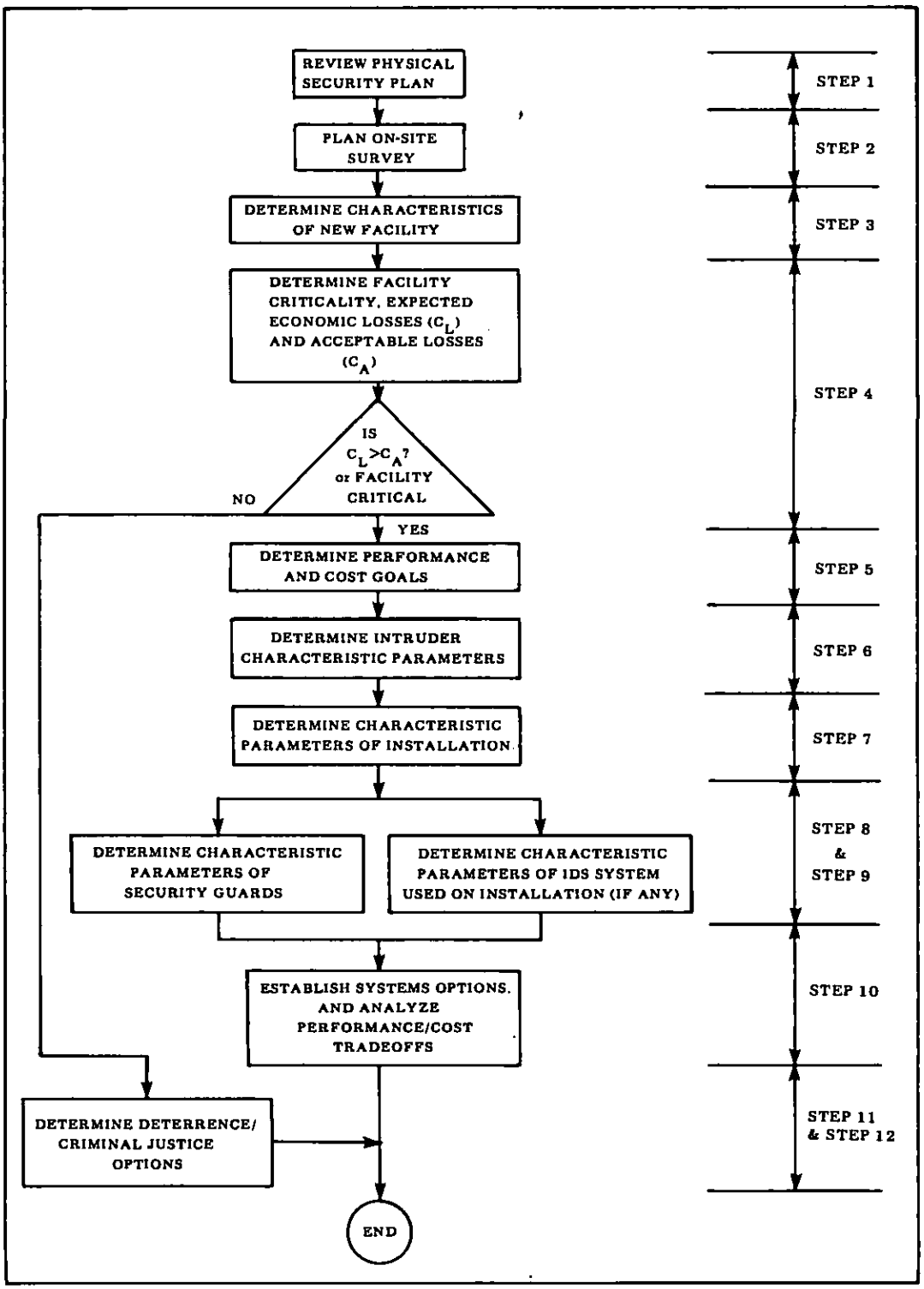

Figure 4. Steps toward secure facility decision.

Suggested delay time/cost worksheets are presented in MIL-HDBK-1013/1, Design Guidelines for Physical Security of Fixed Land-Based Facilities.

Steel-ply wall panels are made from standard 4- by 8-foot sheets of steel, plywood, and polycarbonate (a thermoplastic). The sheets are either precut in a shop to fit the particular room to be hardened and then carried (either by forklift or reach truck with crane attachment (Figure 5), or manually) to the room to be hardened, or cut to proper size onsite as required.

3.2.2 Denial Time Criteria. Any of the systems may be used to harden an existing room, depending on the denial time required. Denial times for each system, based on test data, are listed in Table 2. For applications requiring ballistic penetration resistance, the user may choose from Items 3, 4, 5, and 7 in Table 1. Item 7 in Table 1 is recommended for best protection.

When existing walls have a significant denial time, that denial time can be extended by the hardening methods described here. Table 2 lists denial times for some types of existing construction and the additional denial times estimated for steel-ply panels. Having selected a steel-ply panel configuration, it will be necessary to consider the problems of fabrication and structural design, then costs can be estimated.

Adequate denial times shall be attained at the lowest possible cost. The cost to install a steel-ply system will depend on many factors unique to the site, e.g., the number of cutouts in the walls, whether steel-ply panels are prefabricated in a shop or built up at the site, and the kind of material-handling equipment employed. Table 1 gives the estimated material cost (Washington, DC) for each system. These costs vary with time and geographic location. The costs shown are based upon prices in Southern California in April 1985, adjusted by a factor of 0.83 to the Washington, DC area.

3.3 Building Load Considerations. Generally, it is intended that the use of steel-ply panels will result in a wall denial time approaching that of an 8-inch reinforced concrete wall (10 minutes minimum), MIL-HDBK-1013/1, Figure 7. Not all types of walls are suitable candidates for hardening. An existing room with load-bearing walls of the following types, located on slabs or foundation walls, should be selected. This is a partial list in order of preference:

(a) Reinforced concrete, 6-inch.

(b) Concrete block, 8-inch.

(c) Cinder block, 8-inch.

(d) Steel stud, load bearing.

(e) Wood stud, load bearing.

(f) Steel stud, corrugated siding.

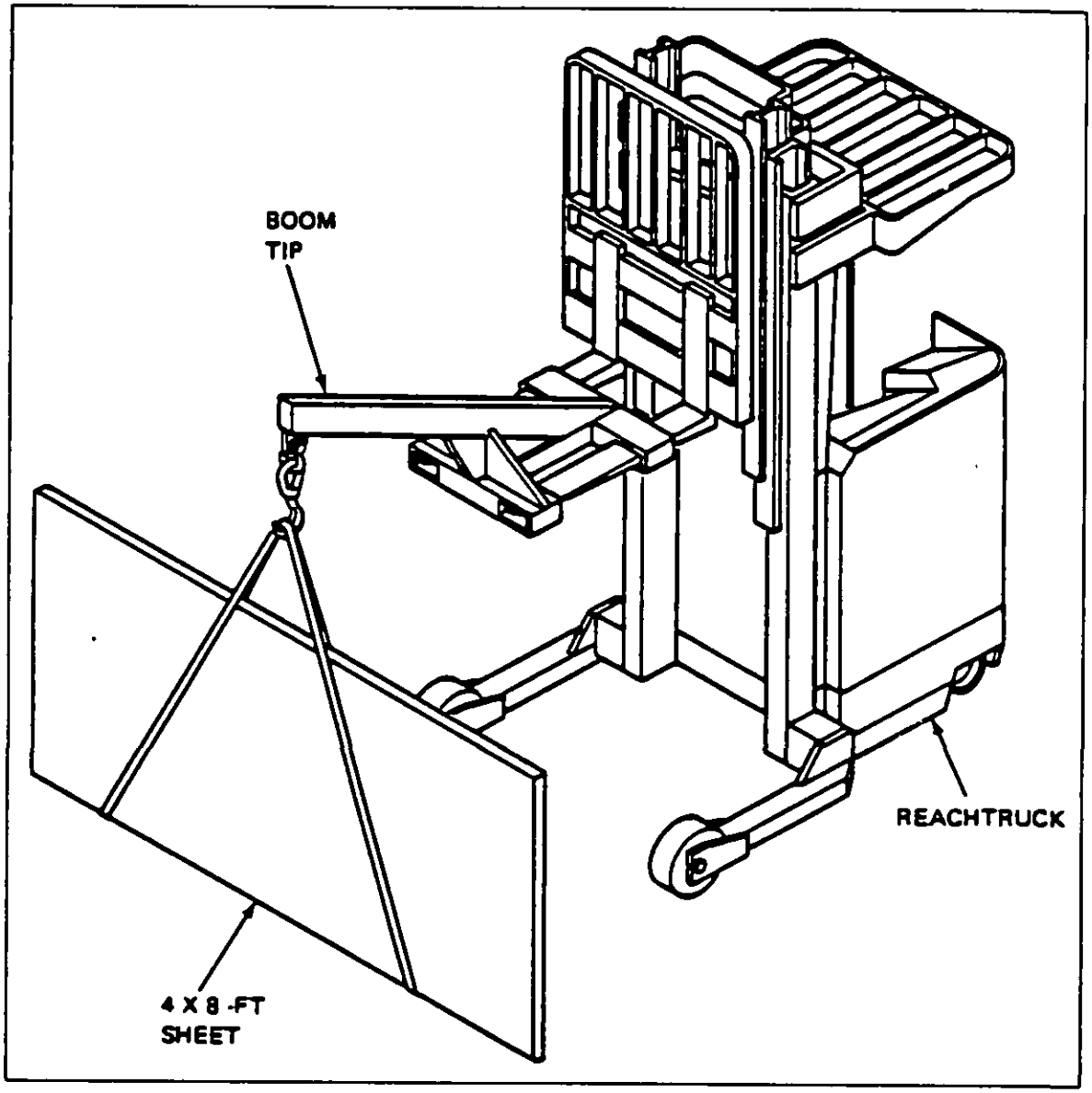

Figure 5. Reachtruck with crane attachment.

Table 2
Denial Times For Various Existing Construction and Steel-Ply Installations (Handtool and Powertool Attack)[a]

Type of Construction	Minimum Denial Time (Minutes)
Existing Construction	
4-in concrete w/6 x 6 x 1/4 mesh	2
6-in concrete, reinforced, 6 x 6 (No. 5)	7
8-in masonry, unreinforced	2
Stud-grit	2
Additional Denial Time From Steel-Ply Installation	
3-layer (10-gage ASTM A569 steel - 3/4-in plywood - 10-gage ASTM A569 steel)	6
5-layer (10-gage ASTM A569 steel - 3/4-in plywood - 10-gage ASTM A569 steel - 3/4-in plywood - 10-gage ASTM A569 steel)	11
3-layer (9-gage ASTM A607 steel - 3/4 in plywood - 9-gage ASTM A607 steel)	14[b]
5-layer (9-gage ASTM A607 steel - 3/4-in plywood - 9-gage ASTM A607 steel - 3/4-in plywood - 9-gage ASTM A607 steel)	Not Tested
3-layer (1/4-in type 304 stainless steel - 1/2-in polycarbonate - 10-gage ASTM A607 steel)	10
5-layer (10-gage ASTM A607 steel - 1/2-in polycarbonate - 10-gage ASTM A607 steel - 1/2-in polycarbonate - 10-gage ASTM A607 steel)[c]	17

[a]Other methods of attack are: thermal cutting tools, explosives, and vehicle used as a ram.
[b]Twenty minutes with two layers of 90-pound gravel-finish roofing paper.
[c]Recommended for ballistic protection.

Wall foundations and structures must be strong enough to support the added weight of the steel-ply system, which may weigh as much as 180 pounds per lineal foot of an 8-foot-high wall. Rooms selected for hardening are best located on grade with sufficient floor strength to support "forklift-type" equipment used for installation. In addition to the static load imposed by steel-ply panels, dynamic lateral earthquake forces must be examined for each installation. The additional mass of a 15-lb/ft^2 panel might not be significant on a 6-inch reinforced concrete wall (75 lb/ft^2). However, a marked effect might result from the same panel on a wood stud wall weighing about 8 lb/ft^2.

3.4 Earthquake Considerations. Earthquake analysis is site-specific even with regard to a given type of structure. An analysis of earthquake forces for a structure in which steel-ply is to be installed shall be performed by a competent structural engineer; however, some generalities can be pointed out.

3.4.1 Perpendicular Wall Force. Against a force perpendicular to the wall (Figures 6 and 7), pullout of the powder-driven studs and the furring strip would be of concern as well as the effect of the additional force on the structure wall. For a wall with a layering system installed as described in Item 1 of Table 1, a lateral force perpendicular to the wall will be approximately 85 pounds per lineal foot of an 8-foot wall. The strength of one group of fasteners against withdrawal is approximately 124 pounds. In this case, the fasteners to the furring strip are adequate.

3.4.2 Lateral Wall Force. Against a lateral force in the plane of the wall, the steel-ply panels, given adequate connection to the existing wall, may improve the resistance of the structure. For such a case, the shear connection to the existing wall needs to be checked. Figure 8 shows a typical maximum lateral earthquake force for one type of connection. The connections must be checked all the way to the structure foundation. The lateral shear strength of a 5/32-inch-diameter powder-driven stud is 94 pounds for full penetration (1-5/8 inch). The lateral shear strength of the group of three fasteners (Figure 8) is approximately two times 65 plus 57, or 187 pounds, which yields 561 pounds for the total fasteners in a lineal foot of wall. For a panel as described in Item 1 of Table 1, the design lateral earthquake force is approximately 90 pounds per lineal foot of wall. Thus, the fasteners to the furring strip are adequate and fasteners can be spaced a considerable distance apart. For the shear force, a bolt as small as 1/4 inch will be adequate for fastening the furring strip to the wall. However, before selecting the bolt size, it is important that both perpendicular as well as lateral wall forces be considered. To transfer perpendicular wall force from the furring strip to the concrete block as detailed in Figures 6 and 7, each bolt must have a minimum withdrawal resistance of 48-1/3 pounds (force of 145 pounds per linear foot for heaviest 5-layer panel applied to 3-bolt furring attachment) per 1 linear foot of wall. Withdrawal resistance will depend on type of anchor used.

3.5 Panel Fabrication. Three-layer steel-ply panels may be fabricated onsite as illustrated in Figures 6 through 8. For 5-layer steel-ply panels it may be necessary to rely on fastening each individual sheet to the underlying sheet(s)

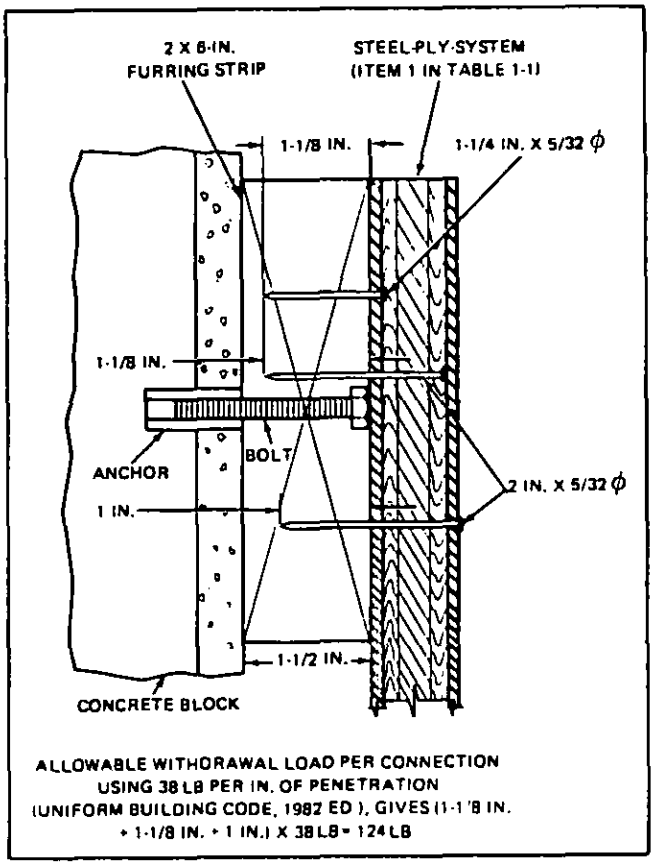

Figure 6. Typical construction cross section for perpendicular load analysis.

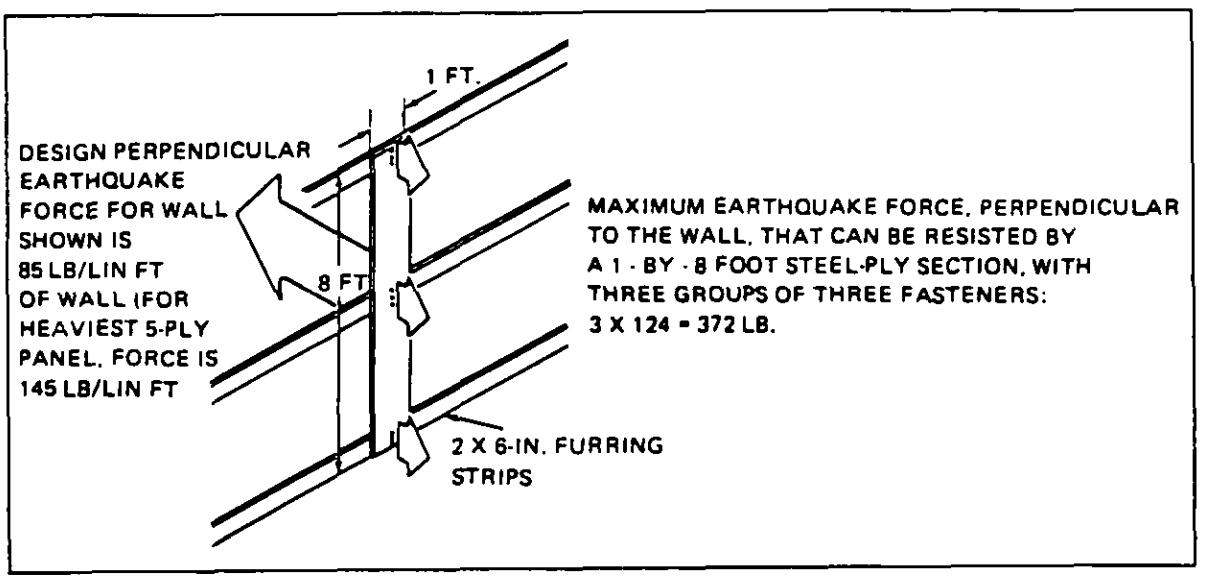

Figure 7. Typical earthquake load resistance (perpendicular).

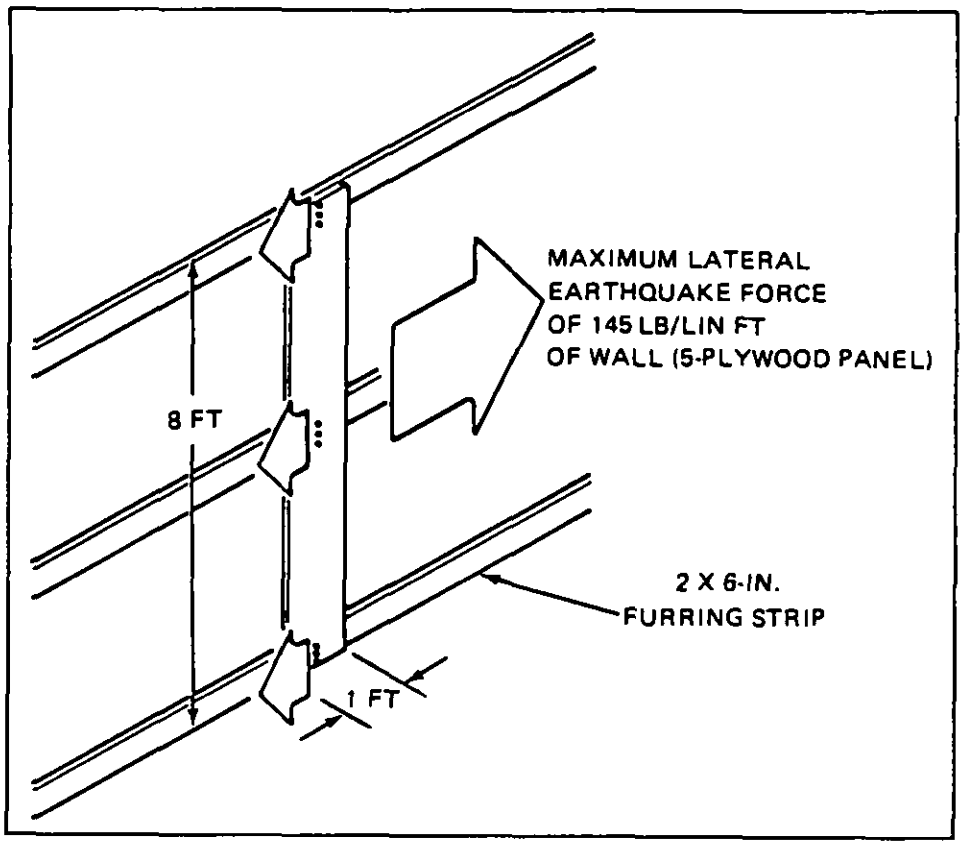

Figure 8. Typical maximum lateral earthquake force.

since the powder-driven studs are not likely to penetrate the total thickness of the panel. Three-layer panels may also be prefabricated in a shop, in which case the sheets can be fastened together, outer sheets to inner sheet(s), by powder-driven fasteners. Alternatively, sheets may be fastened together with adhesives or bolts. A tongue-and-groove arrangement (Figure 9) might be used, although it may be difficult to install such panels. Prefabricated 48- by 96-inch panels will weigh from 420 pounds (if 3-layer) to 725 pounds (if 5-layer), and therefore will require forklifts for installation. Should the selected room have a window, the window must be filled in so as to match the denial time of the existing wall. Cutouts may be required for electric outlets; heating, ventilation, and air conditioning vents; and doorways.

3.6 Panel Installation. Preparation of panels and delivery to the installation site can be done as the installation progresses. Delivery of too much material may create a crowding problem and require excess handling. Sheet layers are fastened in place against the existing wall with powder-driven fasteners (Figures 10 and 11). Prebolted panels are not recommended and are confined to application on a stud wall using a 3-layer panel only. A bolted assembly must be configured as shown in Figure 9, with a tongue-and-groove joint. The bolt size and pattern shown in Figure 12 should be used. Numbering of the laminates aids installation in the correct sequence. An electric circular saw is recommended for cutting plywood and polycarbonate sheets.

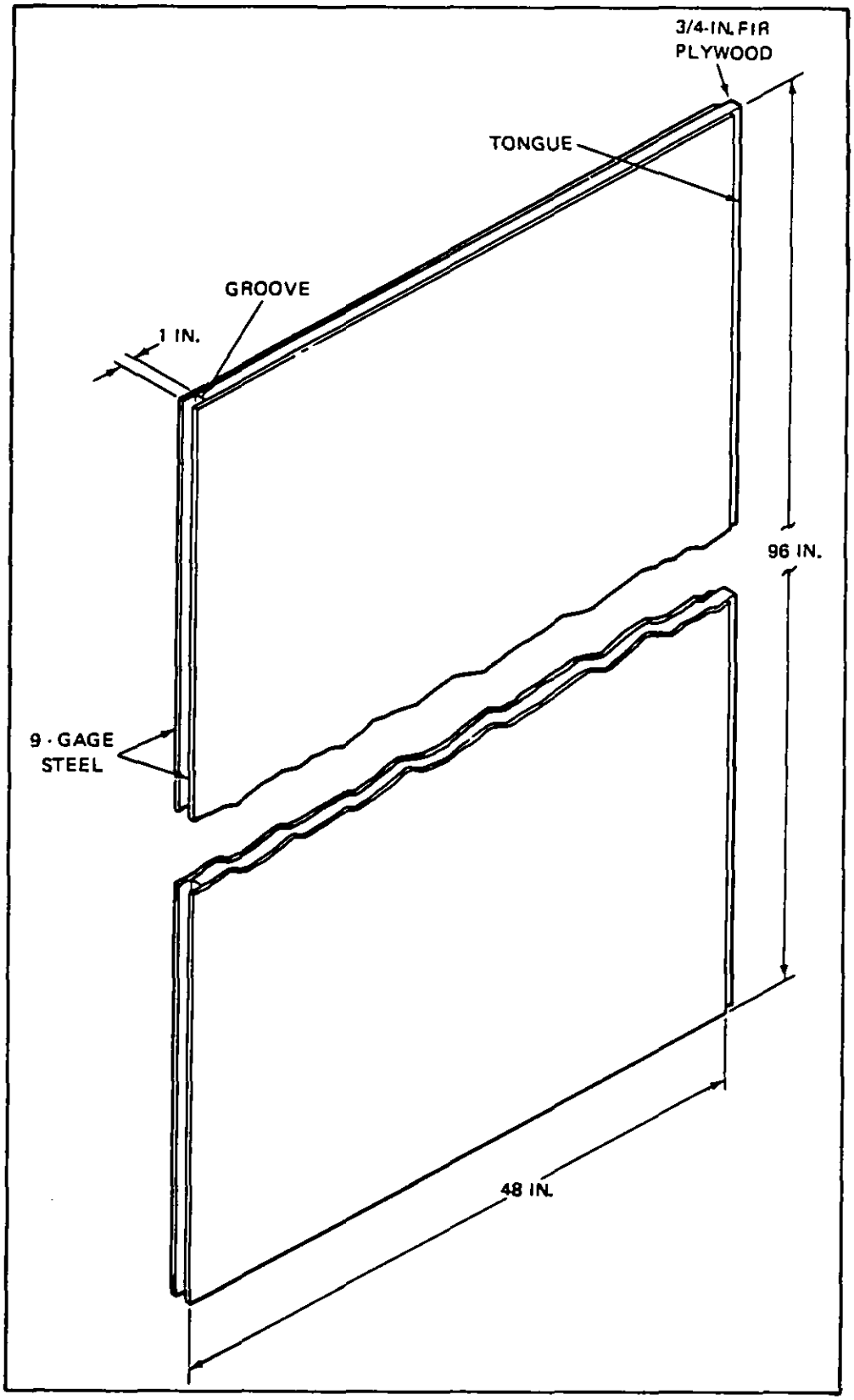

Figure 9. Tongue-and-groove prefabrication option.

Figure 10. Installation of laminates using powder-driven fastener.

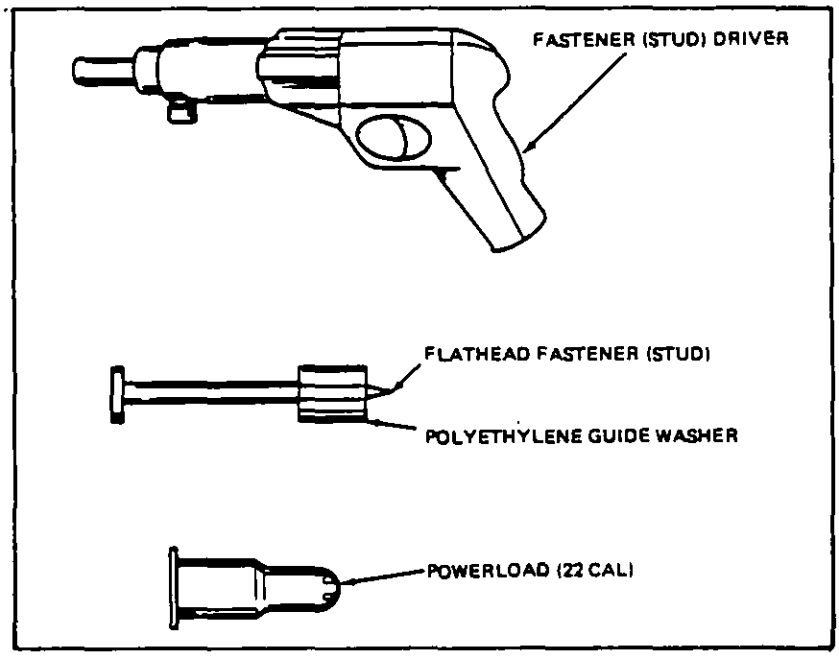

Figure 11. Fastening hardware.

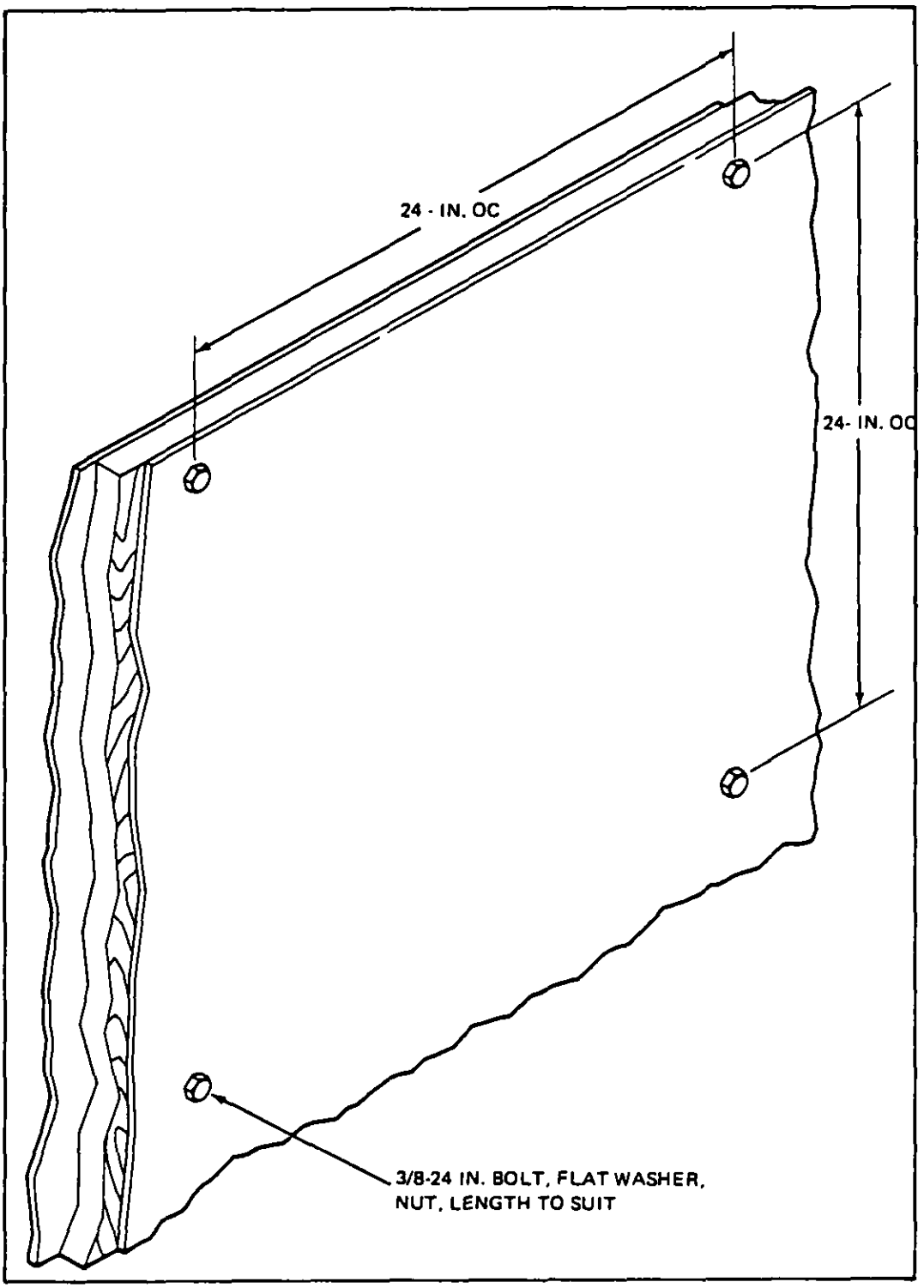

Figure 12. Panel-bolted assembly option (three-layer combinations only).

WARNING

Post KEEP AWAY placards along laminate delivery forklift route to installation site.

WARNING

Always have sheet stock steadied by at least one man during transit via forklift and crane attachment.

WARNING

Safety goggles must be worn by all personnel within direct line of sight of power actuator fastener drivers.

WARNING

Safety goggles must be worn when cutting or drilling polycarbonate.

A triple chip saw blade design should be used when sawing polycarbonate. Flame cutting is recommended for the steel sheets. Lifting each panel into position against the walls can be difficult and dangerous. Table 3 shows the weight of each type of panel. Sheet stock may weigh as much as 325 pounds (1/4-inch stainless steel). Four men wearing gloves, hard hats, and steel-toed shoes are required for handling sheet stock.

Table 3
Weights of 4- by 8-Foot Sheet Stock

Description	Approximate Weight (lb)
Steel, 10-gage (0.13 inches)	175
Steel, 9-gage (0.15 inches)	195
Polycarbonate, 1/2-inch	99
Stainless steel, 1/4-inch	325
Plywood, 3/4-inch fir	72

WARNING

Do not attempt to manually lift or move sheets of stock without assistance. Serious injury may result from strains or dropped sheets.

Make maximum utilization of a forklift or reach truck in moving, lifting, and holding stock into position against the walls (Figure 13).

WARNING

Post KEEP OUT placards at each entrance to room being hardened.

WARNING

Do not install panels alone. Under no circumstances shall movement or installation of stock be attempted without immediate presence of someone capable of rendering aid.

WARNING

Personnel must remain clear of moving equipment. Whenever equipment is in motion, a safety watch having immediate access to and full view of operations being performed shall be posted.

WARNING

Injuries, no matter how slight, should never go unattended. Always get first aid or medical attention immediately. If someone is injured and stops breathing, begin resuscitation immediately. Any delay could cost the life of the victim.

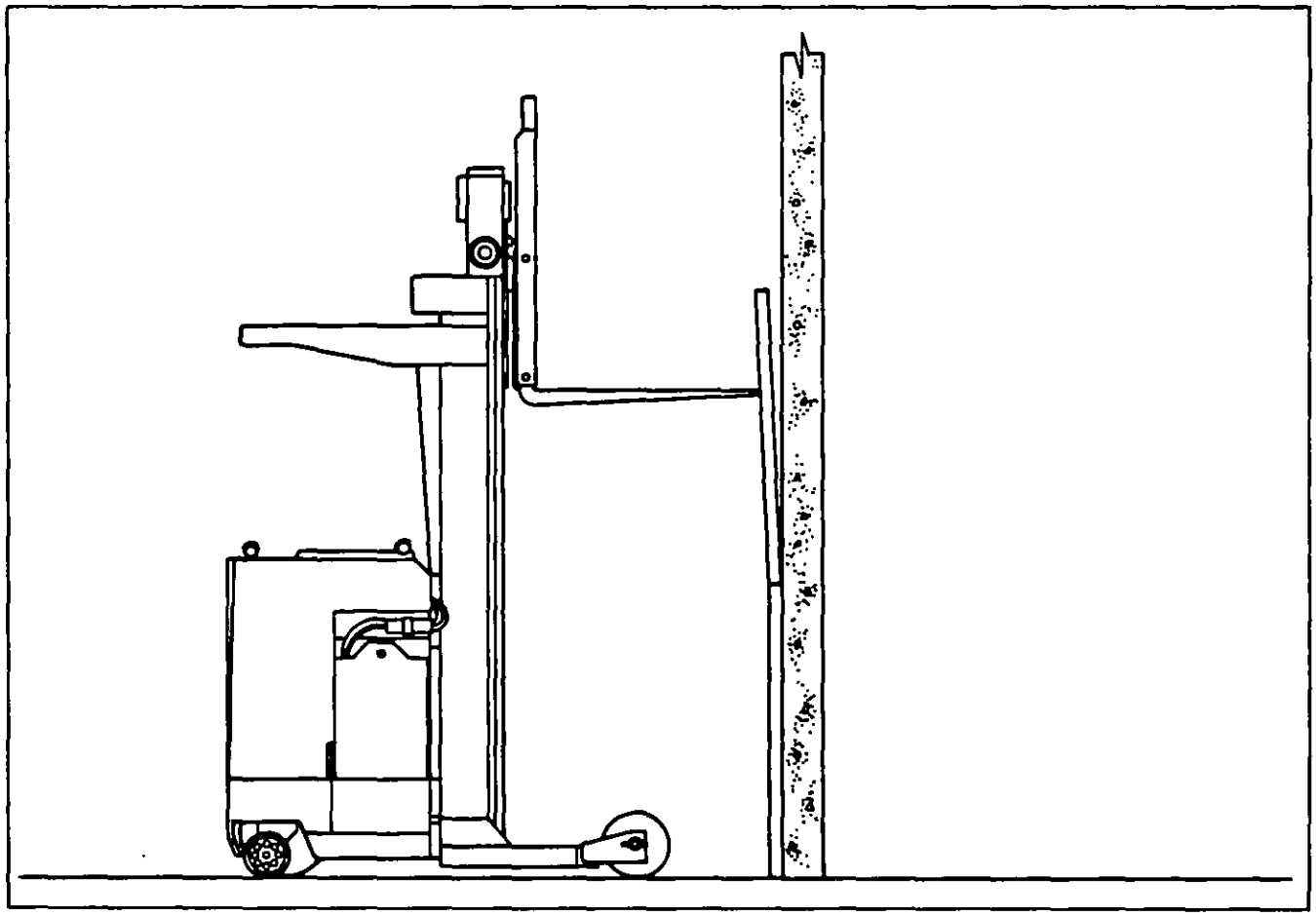

Figure 13. Using reachtruck to hold panel in place while driving fasteners.

The types of walls most commonly encountered and the technique for fastening panels to each type are shown in Figures 14 through 19. Specific details are included on NCEL Drawing 82-20-1F, Physical Security Steel-Ply System, Typical Sections and Details. The tools and equipment required for installation are listed in Table 4. The installation procedure for the layering system shown in Item 1 of Table 1, for an item 1 type wall is presented in steps (a) through (i). The initial treatment of existing walls is summarized in Table 5.

(a) Fasten first layer (steel), panel by panel, with 8-foot dimension horizontal (Figure 20), to wall with 1-1/4-inch powder-driven fasteners (Figures 10 and 11). Be sure to drive fasteners through the panel into the furring strips.

(b) Fasten second layer (plywood or polycarbonate), with 8-foot dimension vertical (Figure 20), to first layer with 2-inch powder-driven fasteners (Figures 10 and 11). Be sure edges overlap edged of the first layer.

(c) Repeat step (b) for other internal layers, if any, using 2-inch fastener. Be sure that edges overlap edges of the previous layer.

(d) Fasten final layer (steel), through the previous layer, with the 8-foot dimension vertical (Figure 20), with 2-inch powder-driven fasteners.

(e) Finish four corners as shown in Figure 21. Any standard 1-inch corner molding may be used.

(f) Finish ceiling line and floor line as shown in Figure 22. Site-specific engineering will be required for walls more than 8 feet in height.

(g) If secure enclosure is to be used for personnel offices, the walls may be painted or covered with decorative vinyl.

NOTE

During layup of panel layers, the panels will stay in place and ease the problem of slippage and falling if they are cemented to the existing wall and to each other with a structural adhesive as they are placed (Figure 23).

(h) Check out entire installation. Ensure that:

(1) All panels overlap; there are no open cracks.
(2) Joints are flush and tight.
(3) Panels lie flat against existing wall and each other.

(i) Clear out all debris.

Table 4
Panel Installation Tools

Item	Description of Tools	Part Number	Quantity
1	Low-velocity, powder-operated stud driver, 3-inch capacity, with accessories: safety goggles and cleaning kit	McMaster-Carr No. 98103A020 or equivalent	2
2	5/16-inch flat head fastener (studs): 1-1/4-inch long 2-inch long 3-inch long	McMaster-Carr No. 98103A108 No. 98103A112 No. 98103A116 or equivalent	As required
3	Screwdriver, 12-inch, flat blade or drill adapter	Commercial	1 per individual
4	Wrench set, socket, 1/2 to 1 inch	Commercial	1 (2 desirable)
5	Hammer, carpenter	Commercial	1 per individual
6	Reach truck or forklift	Commercial 1,000-lb cap	1 (2 desirable)
7	8-inch circular saw	Commercial	2
8	Electric hand drill	Commerical	2

Table 5
Wall Preparation

Item	Description of Wall	Wall Preparation
1	Wood or metal stud, nonload-bearing	Do not use, cannot withstand earthquake.
2	Wood or metal stud, load-bearing	Remove decoration, molding, and other projections. Locate studs.
3	Concrete Block and	Apply furring strips in accordance with Figures 14-19. Use anchor bolts to fasten furring strips to block. Remove any projections.
4	Reinforced Concrete	

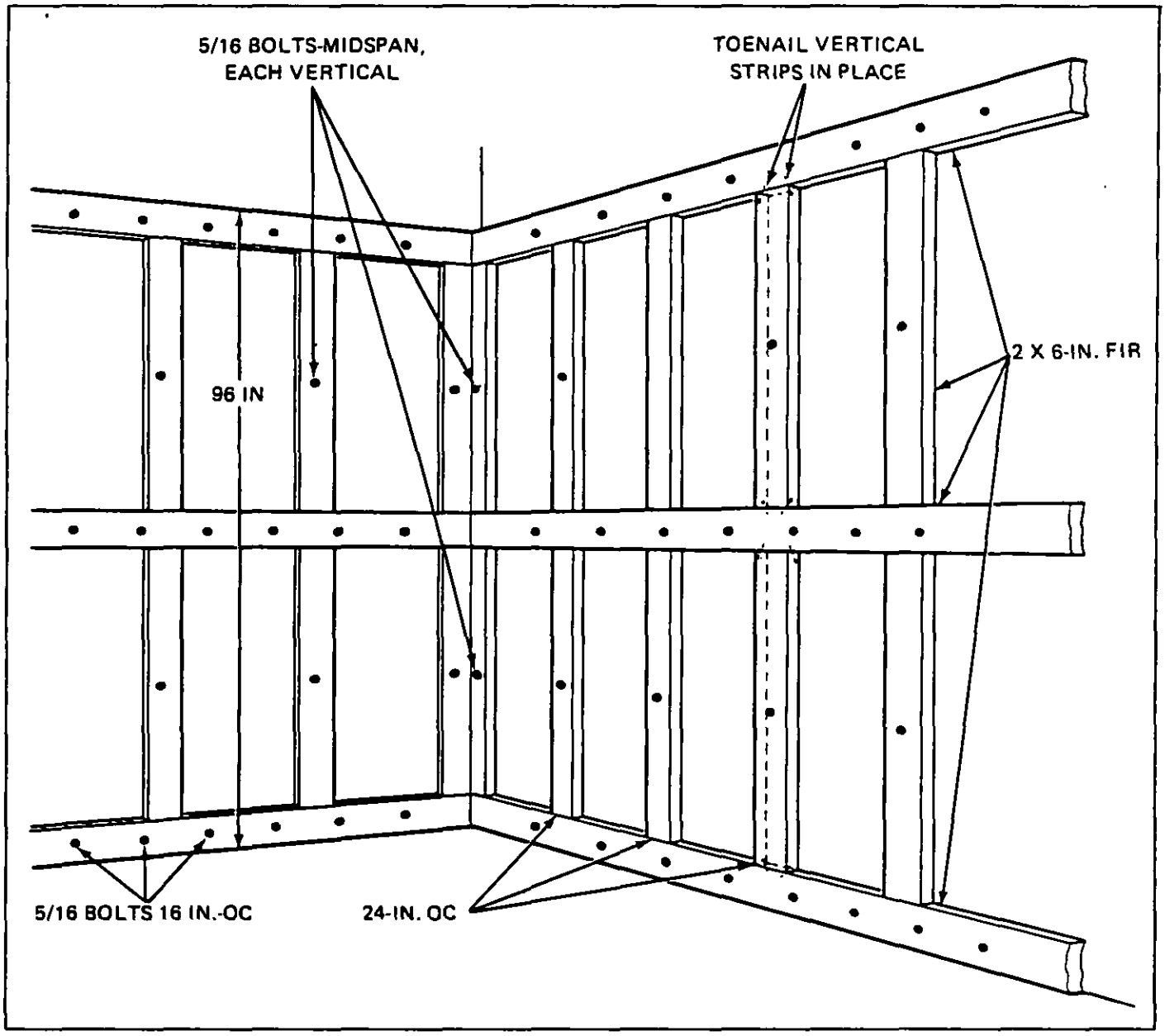

Figure 14. Application of furring strips to existing concrete block wall.

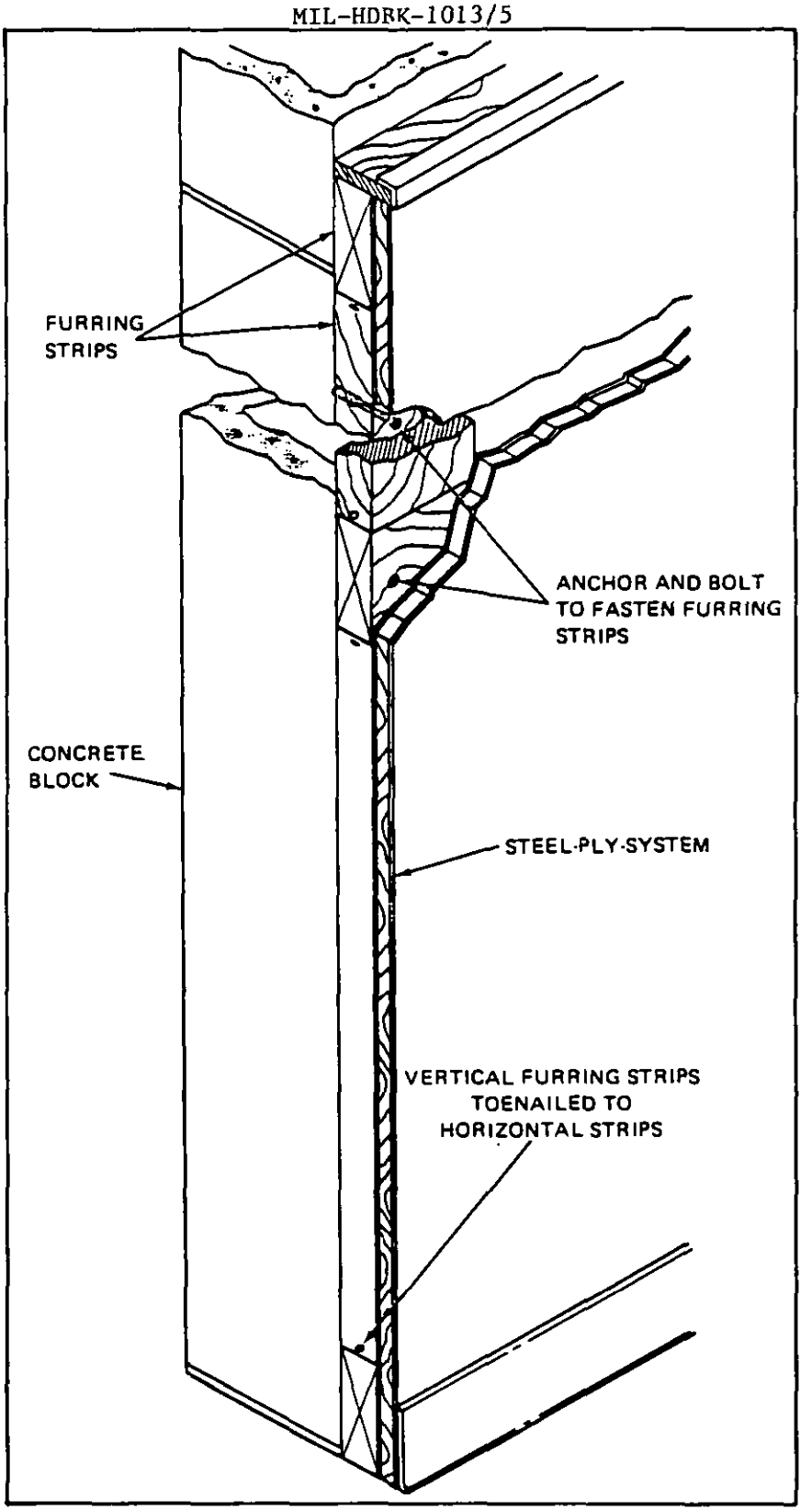

Figure 15. Installation details, existing concrete block walls.

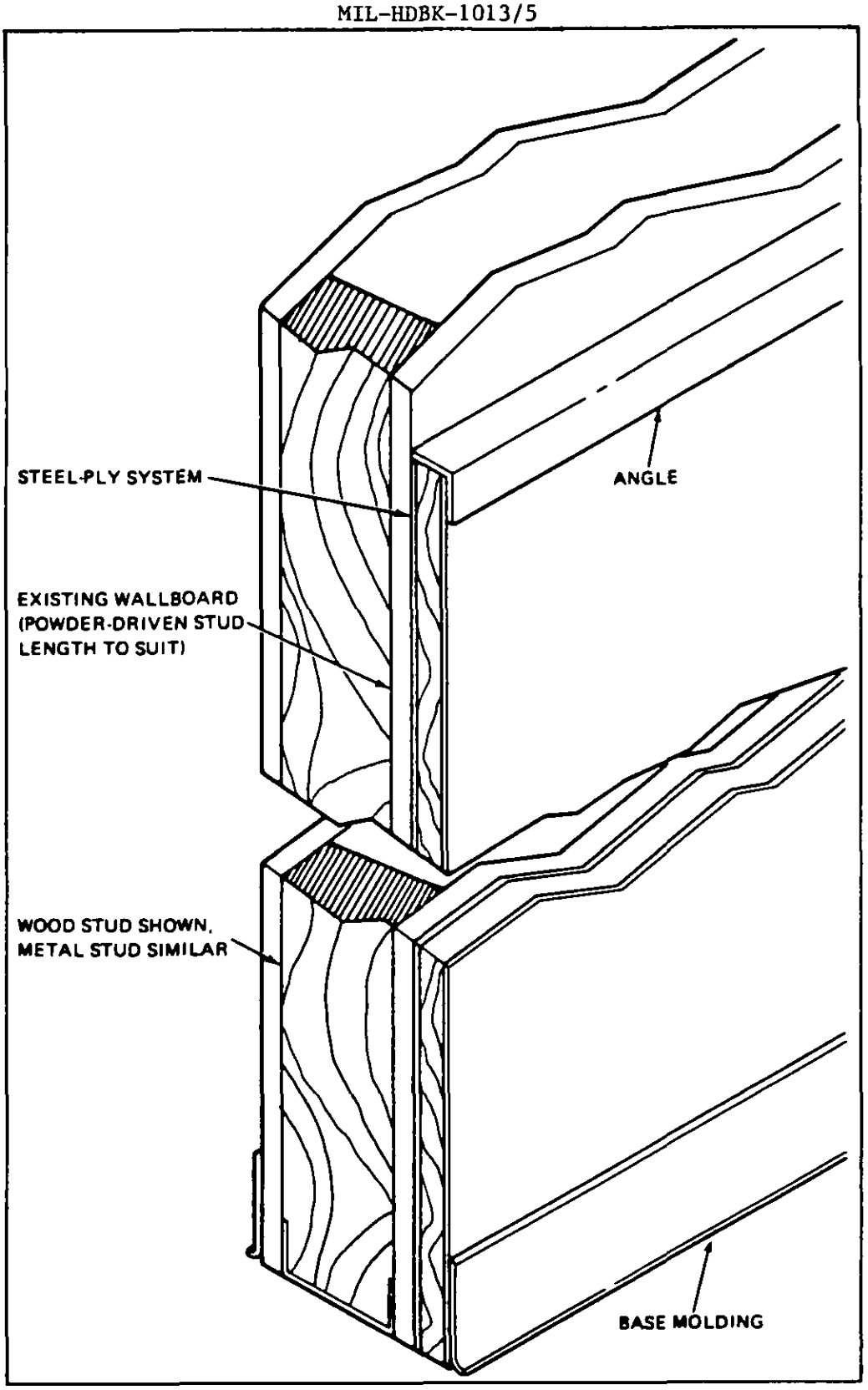

Figure 16. Installation details, existing stud (wood or metal) wall.

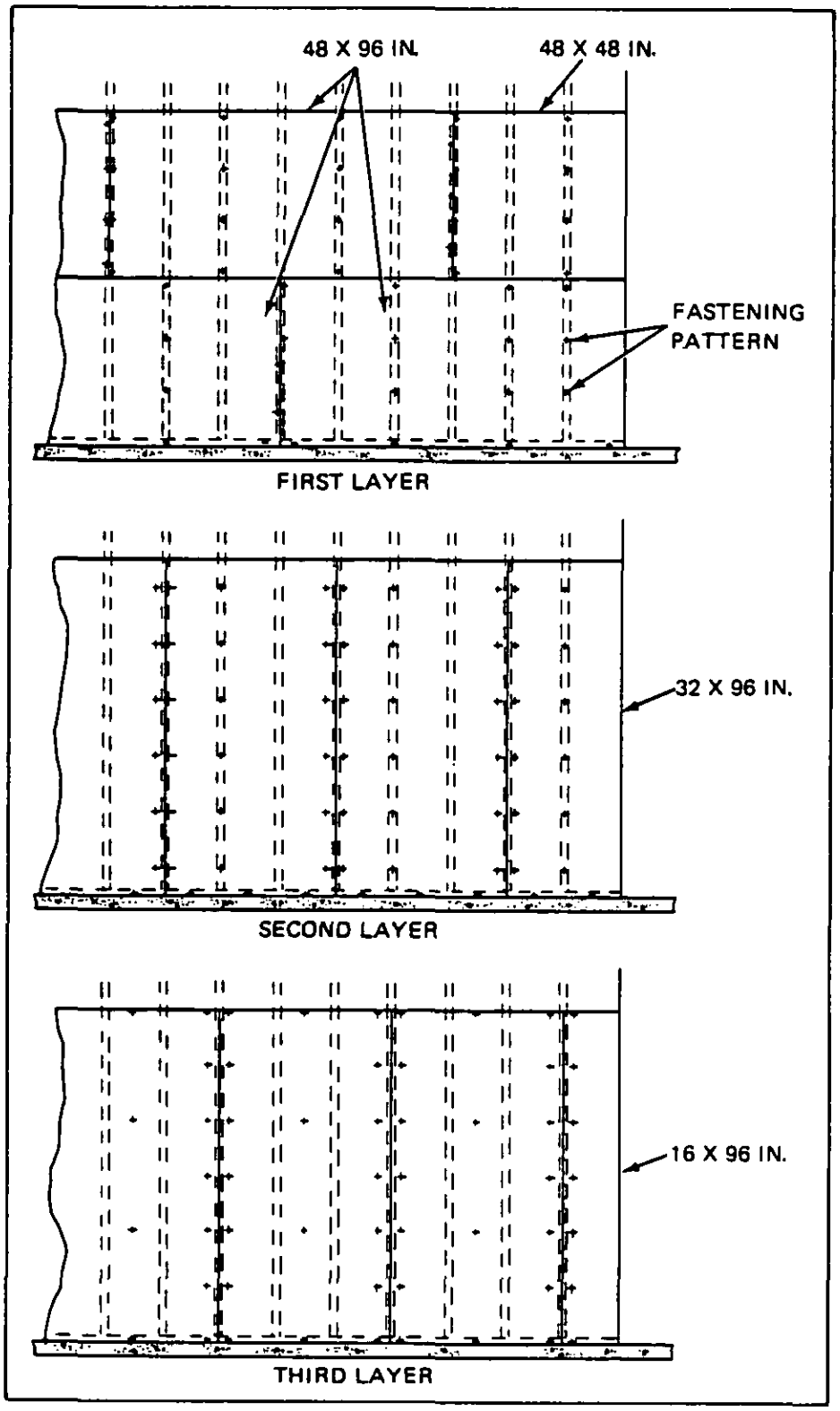

Figure 17. Recommended panel application for stud wall.

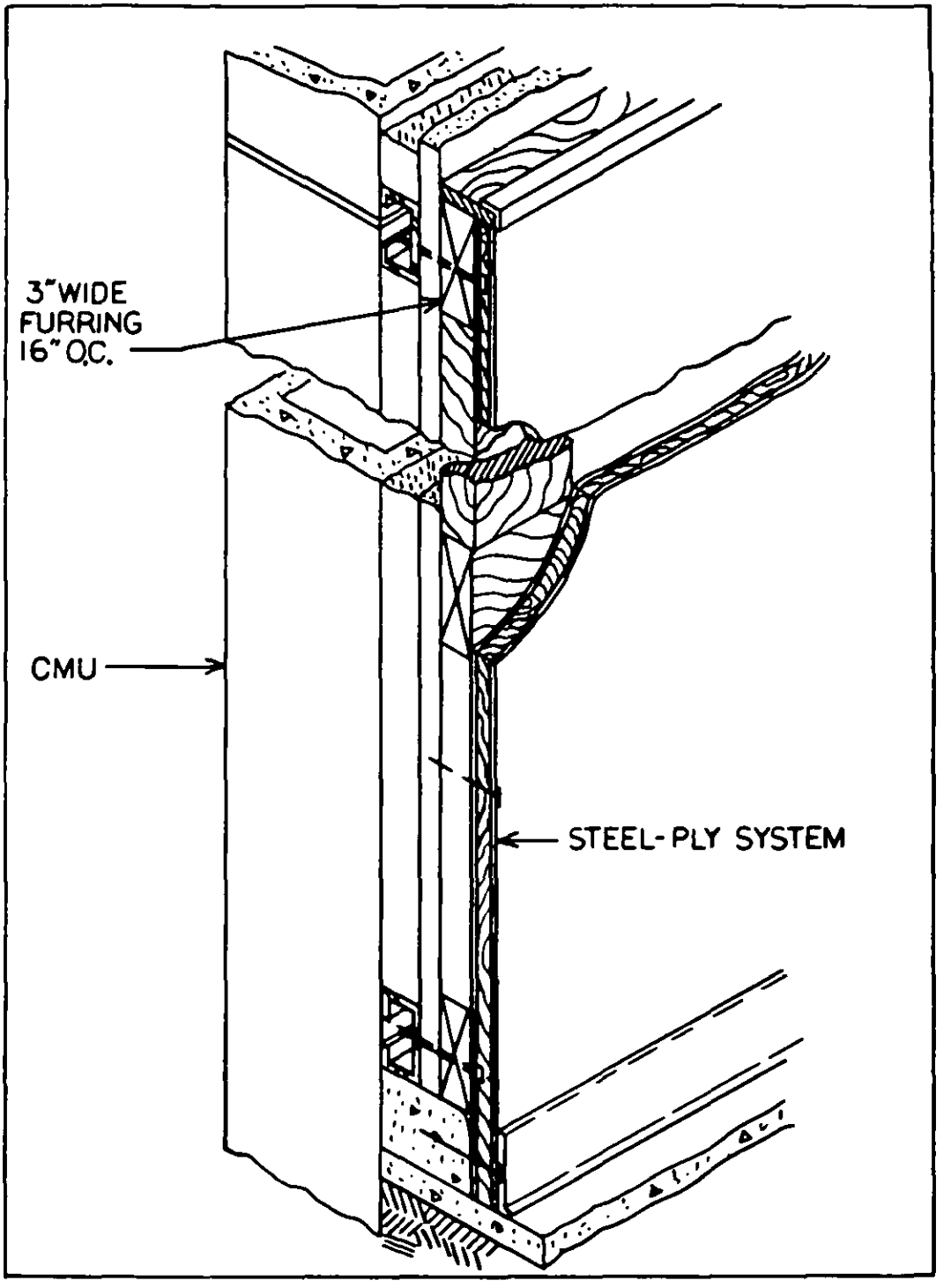

Figure 18. CMU wall with interior finish.

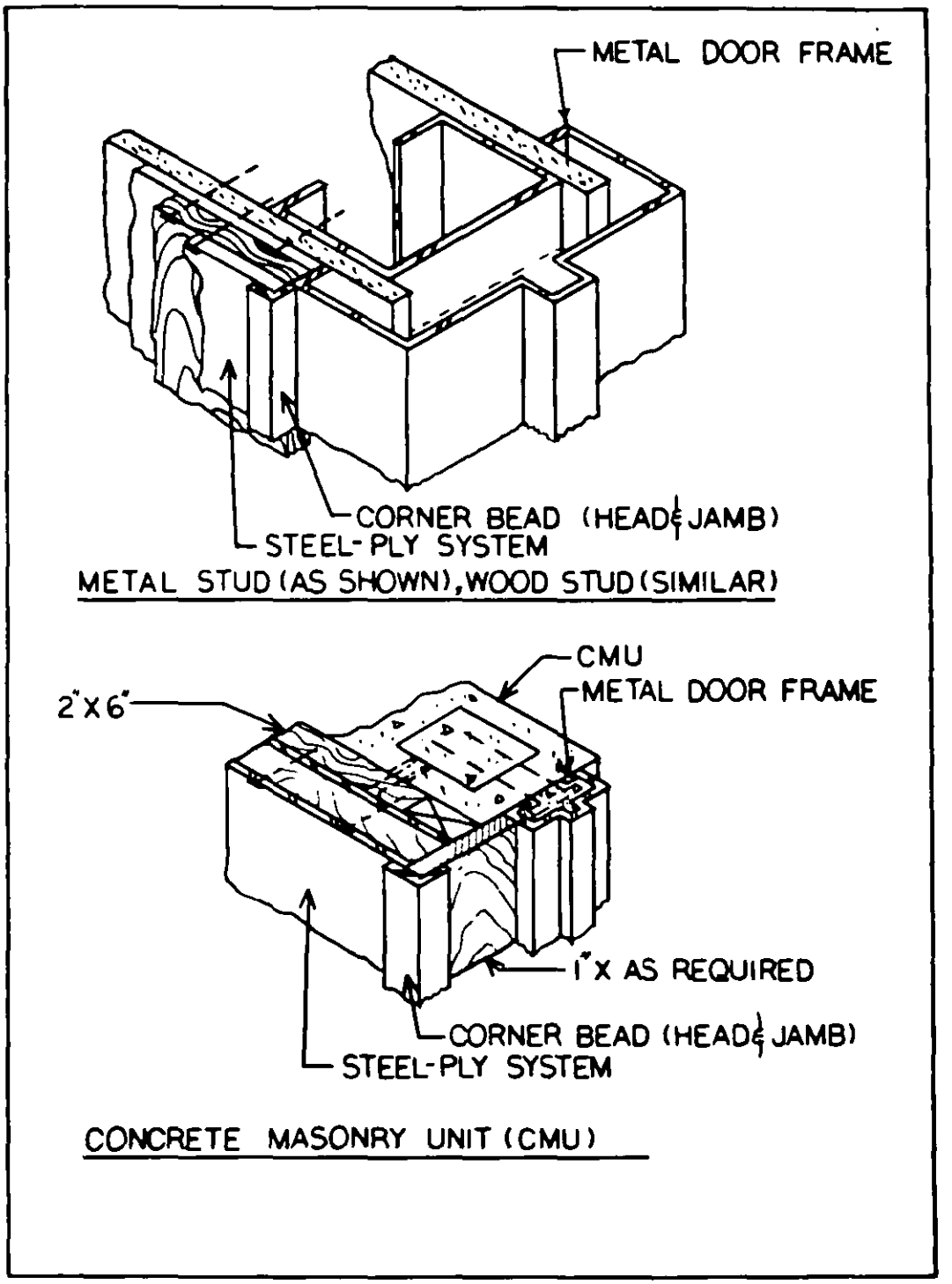

Figure 19. Typical section door openings.

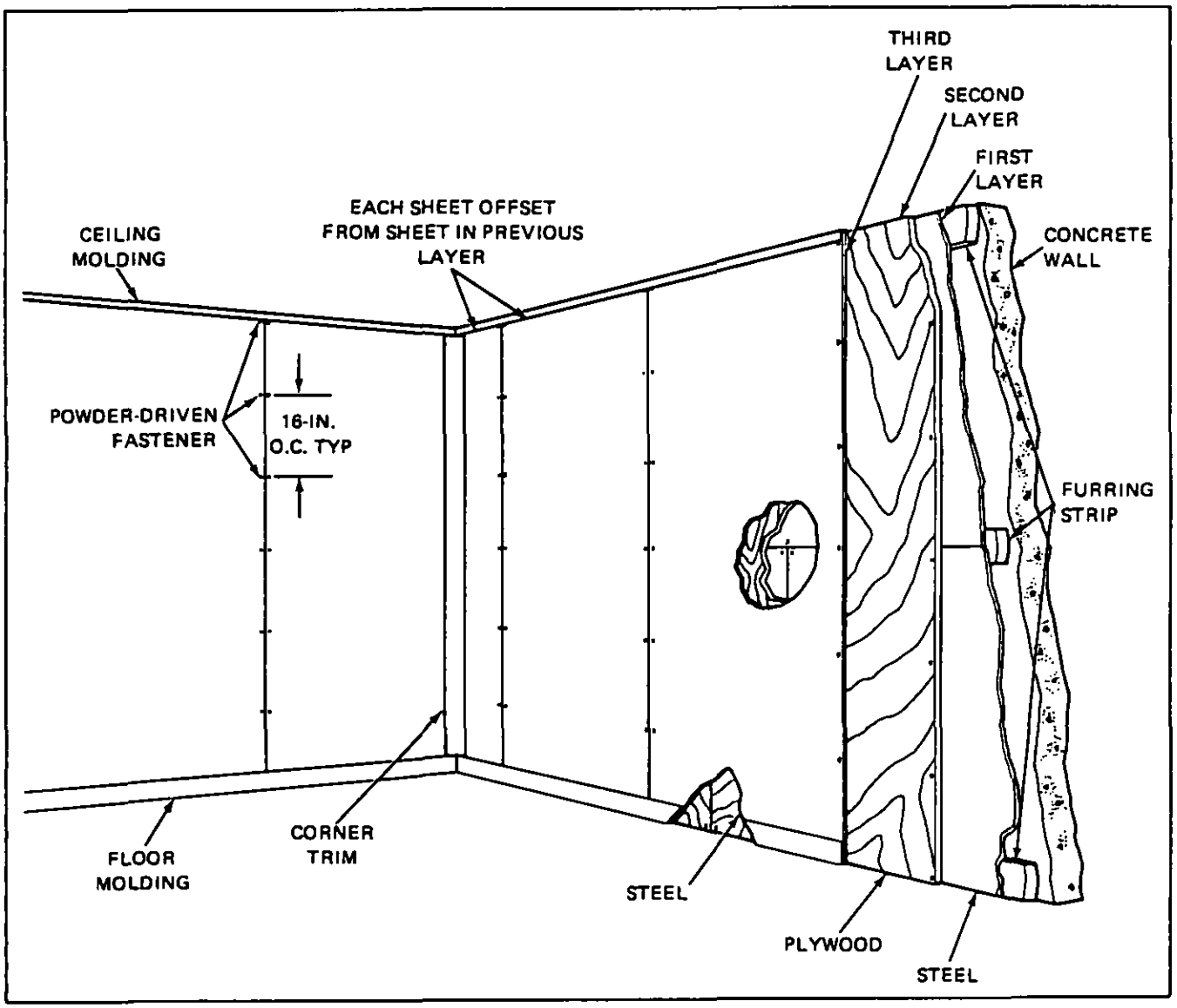

Figure 20. Orientation and sequence of installation when fabricated onsite.

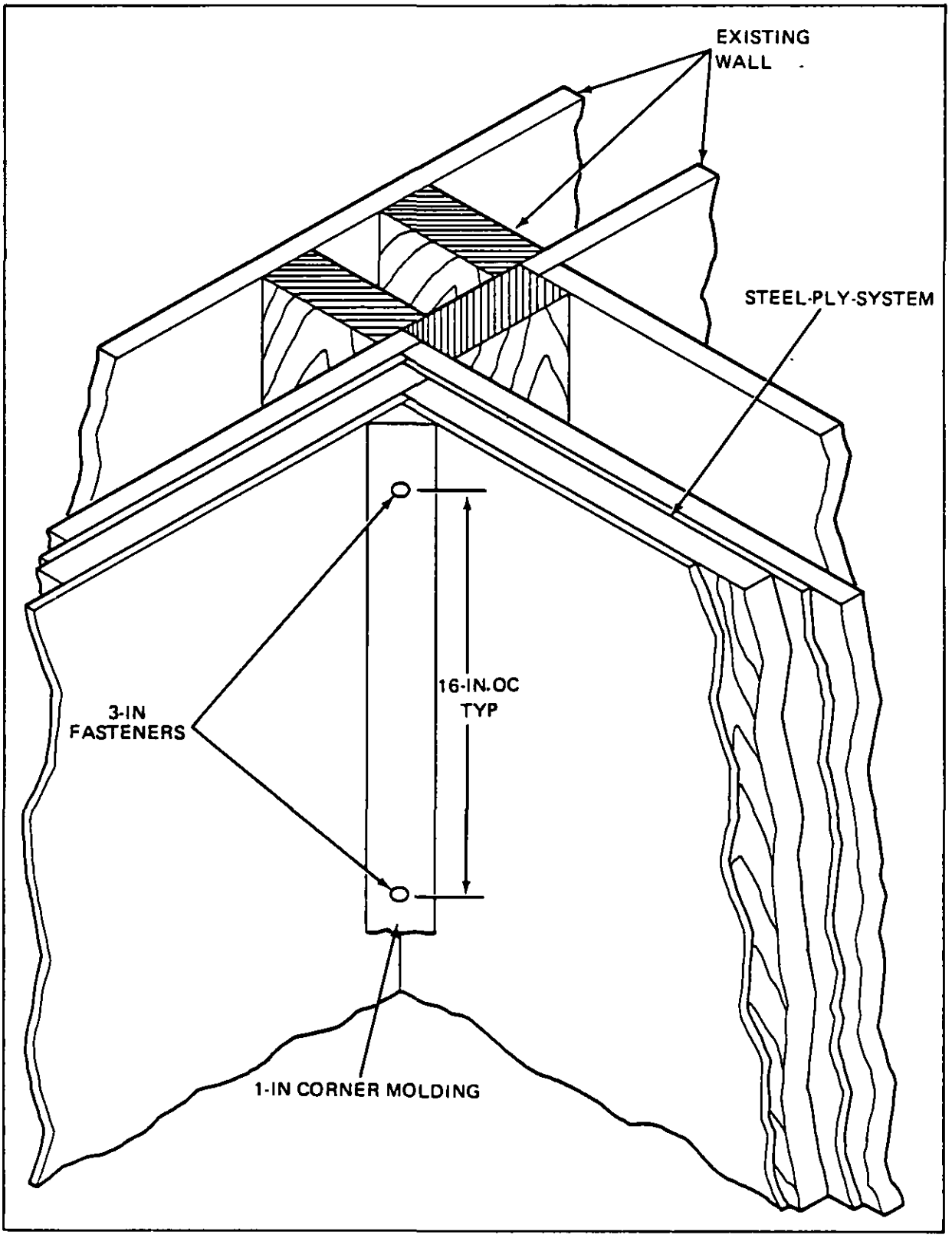

Figure 21. Corner detail.

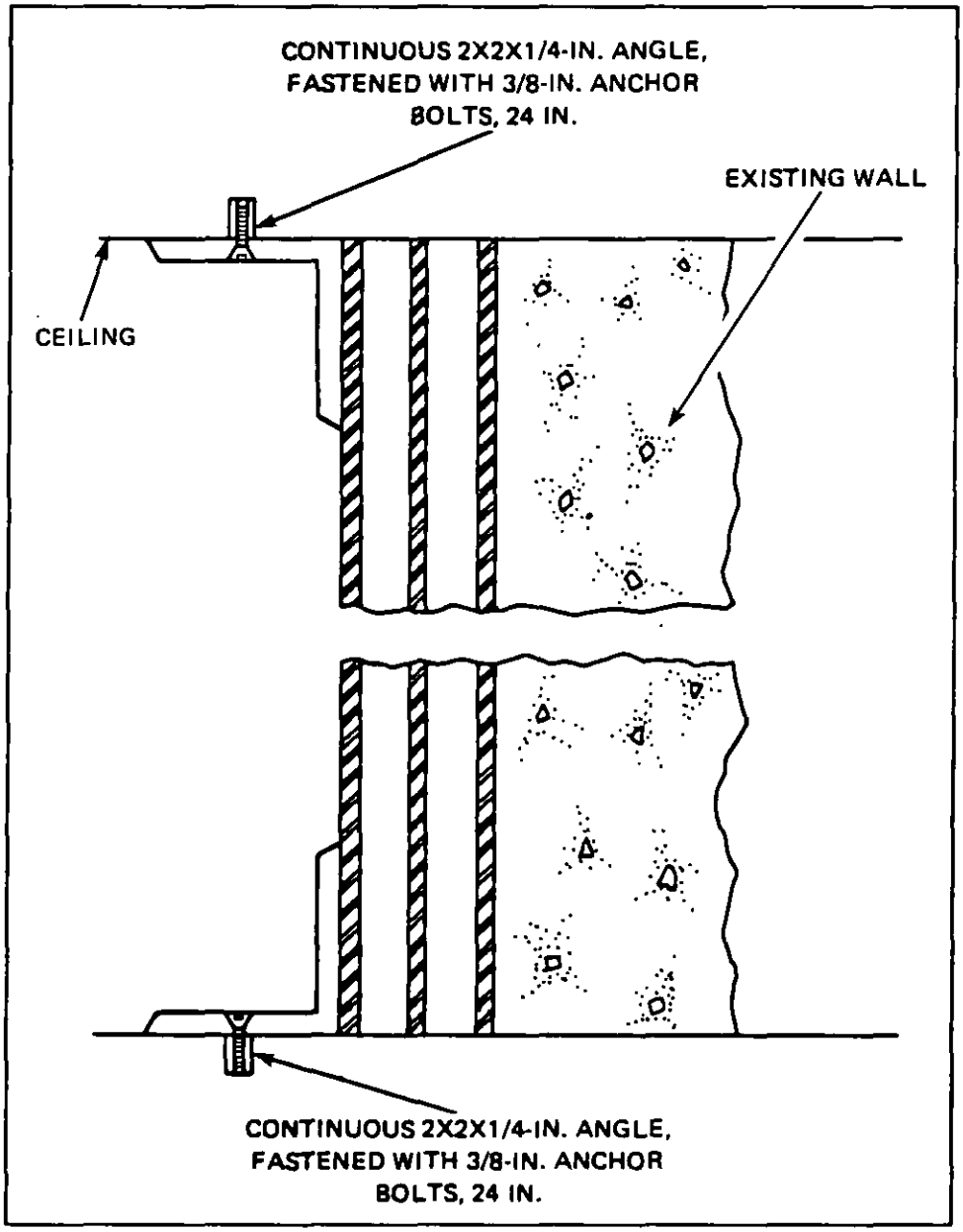

Figure 22. Base and ceiling trim detail.

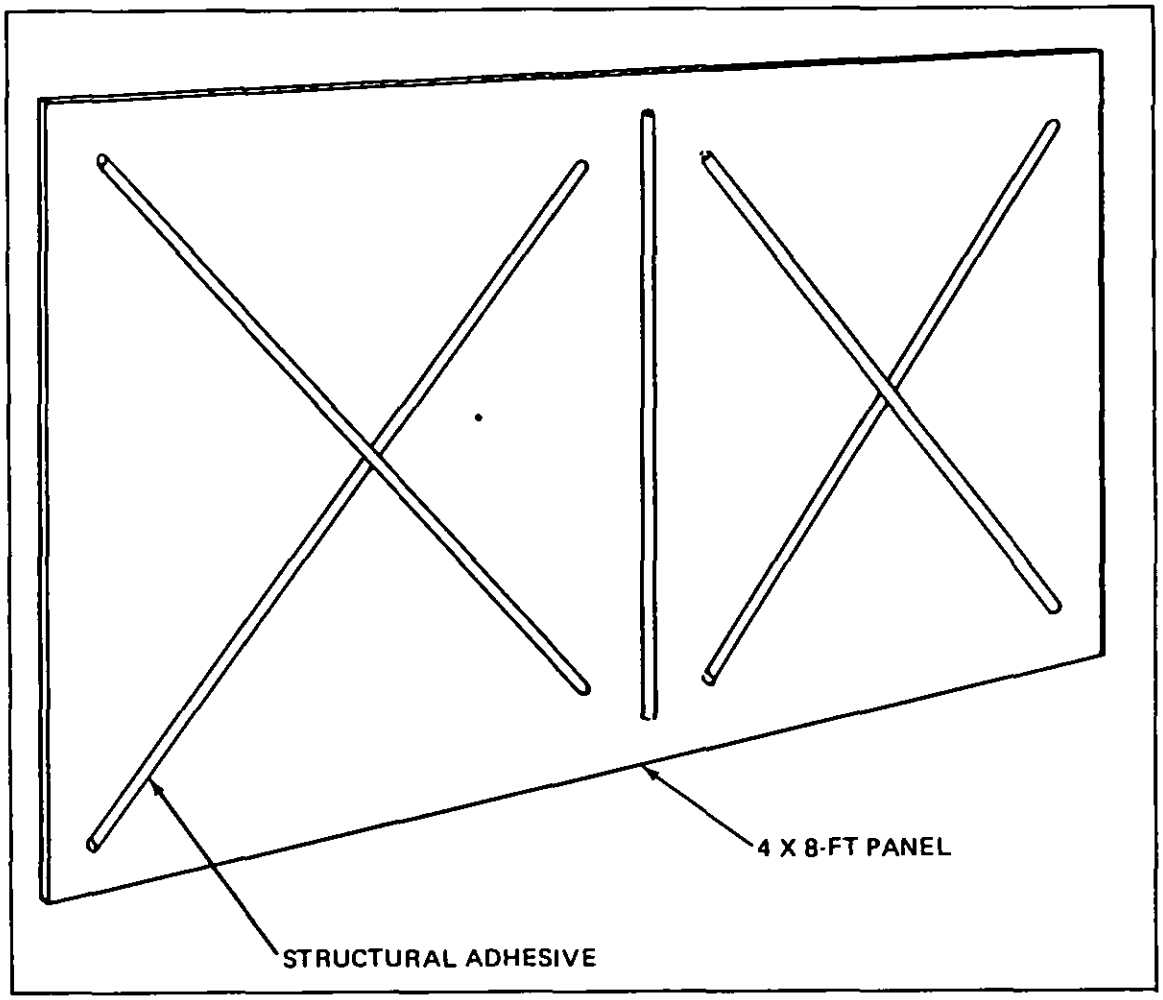

Figure 23. Suggested adhesive pattern.

BIBLIOGRAPHY

Barrier Technology Handbook, Sand 77-0777. Sandia Laboratories, Albuquerque, New Mexico 87115, Apr 1978.

Design Guidelines for Physical Security of Fixed Land-Based Facilities, MIL-HDBK-1013/1. Naval Facilities Engineering Command, Alexandria, Virginia.

NAVFAC P-Publication, NAVDOCKS P-355, Seismic design for buildings. Naval Facilities Engineering Command, Alexandria, Virginia, Feb 1982.

Physical Security Instruction for Sensitive Conventional Ammunition and Explosives, OPNAVINST 5530.13. Department of the Navy, Washington, DC.

Technical Data Sheet, TDS 80-02, Steel-ply attack-resistant wall system. Naval Civil Engineering Laboratory, Port Hueneme, CA, Apr 1980.

Technical Data Sheet, TDS 82-04, Increase security in sensitive areas. Naval Civil Engineering Laboratory, Port Hueneme, CA, Apr 1982.

Uniform Building Code, 1982.

REFERENCES

American Society for Testing and Materials (ASTM), 1916 Race Street, Philadelphia, PA 19103.

ASTM A569	Specification for Steel, Carbon (0.15 maximum percent), Hot-Rolled Sheet and Strip, Commercial Quality
ASTM A607	Specifications for Steel Sheet and Strip, Hot-Rolled and Cold-Rolled, High Strength, Low-Alloy Columbium and/or Vanadium

Chief of Naval Operations Instruction available from Naval Publications and Forms Center, 5801 Tabor Avenue, Philadelphia, PA 19120.

OPNAVINST 5530.13	Physical Security Instruction for Sensitive Conventional Arms, Ammunition, and Explosives

Naval Civil Engineering Laboratory (NCEL), Port Hueneme, CA 93043.

Drawing 82-20-1F	Physical Security; Steel-Ply System; Typical Sections and Details
Techdata Sheet 80-02	Steel-Ply Attack-Resistant Wall System
Techdata Sheet 82-04	Increase Security in Sensitive Areas

Naval Facilities Engineering Command Publications available from Naval Publications and Forms Center, 5801 Tabor Avenue, Philadelphia, PA 19120.

MIL-HDBK-1013/1	Design Guidelines for Physical Security of Fixed Land-Based Facilities
NAVFACINST 5100.11	Command Safety and Health Program

INDEX

Page

B

Building Load Considerations 14

D

Denial Time Criteria 14

E

Earthquake Considerations 17
    Lateral Wall Force 17
    Perpendicular Wall Force 17

F

First Aid 1
Furring Strips 17

G

General Precautions 1

I

Installation
    Existing Concrete Block Wall 29
    Existing Stud Wall 30
    Sequence 34

L

Load-Bearing Walls 14

P

Panel Fabrication 17
    Five-Layer Steel-Ply 17
    Three-Layer Steel-Ply 17
Panel Installation 19
    Tools 27
Panel Installation Procedure 25
Panel Selection Criteria 12
Personnel Requirements 1
Powder-Driven Fasteners 19

Page

R

Room Selection Criteria 12

S

Steel-Ply System
Installation Costs 14
Weight 17
Steel-Ply Wall Hardening 4
Background 4
Specific Precautions 4
System Description 5
Steel-Ply Wall Panels 14
System Selection and Installation 12

T

Tools - Panel Installation 27

W

Warnings 2
Weight - Panels 23

CUSTODIAN:
NAVY - YD

PREPARING ACTIVITY
NAVY - YD

PROJECT NO.
FACR-0236

INSTRUCTIONS: In a continuing effort to make our standardization documents better, the DoD provides this form for use in submitting comments and suggestions for improvements. All users of military standardization documents are invited to provide suggestions. This form may be detached, folded along the lines indicated, taped along the loose edge *(DO NOT STAPLE)*, and mailed. In block 5, be as specific as possible about particular problem areas such as wording which required interpretation, was too rigid, restrictive, loose, ambiguous, or was incompatible, and give proposed wording changes which would alleviate the problems. Enter in block 6 any remarks not related to a specific paragraph of the document. If block 7 is filled out, an acknowledgement will be mailed to you within 30 days to let you know that your comments were received and are being considered.

NOTE: This form may not be used to request copies of documents, nor to request waivers, deviations, or clarification of specification requirements on current contracts. Comments submitted on this form do not constitute or imply authorization to waive any portion of the referenced document*(s)* or to amend contractual requirements.

(Fold along this line)

REPRODUCED AT GOVERNMENT EXPENSE

(Fold along this line)

DEPARTMENT OF THE NAVY

NO POSTAGE NECESSARY IF MAILED IN THE UNITED STATES

OFFICIAL BUSINESS
PENALTY FOR PRIVATE USE $300

BUSINESS REPLY MAIL
FIRST CLASS PERMIT NO. 12503 WASHINGTON D. C.
POSTAGE WILL BE PAID BY THE DEPARTMENT OF THE NAVY

Commanding Officer
Naval Civil Engineering Laboratory
Code L30
Port Hueneme, Ca 93043-5003

STANDARDIZATION DOCUMENT IMPROVEMENT PROPOSAL

(See Instructions – Reverse Side)

1. DOCUMENT NUMBER	2. DOCUMENT TITLE
MIL-HDBK-1013/5	Steel-Ply Wall Hardening Selection And Installation Guide

3a. NAME OF SUBMITTING ORGANIZATION

Naval Civil Engineering Laboratory

b. ADDRESS *(Street, City, State, ZIP Code)*

Code L30
Port Hueneme, Ca 93043-5003

4. TYPE OF ORGANIZATION *(Mark one)*

- ☐ VENDOR
- ☐ USER
- ☐ MANUFACTURER
- ☐ OTHER *(Specify)*: _____
- ☐ EFD/PWO
- ☐ AE
- ☐ CONTRACTOR
- ☐ OICC/ROICC

5. PROBLEM AREAS

a. Paragraph Number and Wording:

b. Recommended Wording:

c. Reason/Rationale for Recommendation:

6. REMARKS

7a. NAME OF SUBMITTER *(Last, First, MI)* – Optional	b. WORK TELEPHONE NUMBER *(Include Area Code)* – Optional
c. MAILING ADDRESS *(Street, City, State, ZIP Code)* – Optional	8. DATE OF SUBMISSION *(YYMMDD)*

DD FORM 82 MAR 1426 PREVIOUS EDITION IS OBSOLETE.

NAVFAC Overprint

REPRODUCED AT GOVERNMENT EXPENSE